SKF Explorer steel/steel plain bearings

Robust and virtually maintenance-free for reduced costs and optimized field performance



The Power of Knowledge Engineering





SKF EnCompass Field Performance Programme: theory meets reality

One might think that two bearings of the same size with the same dynamic load rating should perform equally well in a given application. In reality, they often do not. The reason?

Bearing performance under actual operating conditions is impacted by not only the dynamic load rating (C), but far more by the bearing's inherent design and quality -everything from the surface finish of the raceways to the effectiveness of sealing and lubrication.

The SKF EnCompass Field Performance Programme addresses this issue. By focusing on bearing design optimization and more detailed analysis of the factors influencing bearing service life, the programme will help to meet real-world application conditions.

At the heart of the SKF EnCompass are new, more inclusive bearing life models including a new basic rating life formula for SKF Explorer steel/steel plain bearings. By encompassing more of the factors that impact bearing service life, this model and new software tool provide new insight into the calculation of bearing rating life. The result is a significantly improved guide for selecting bearings for optimum reliability and productivity in the field.

As part of the SKF EnCompass programme, SKF Explorer steel/steel plain bearings have been optimized to give you a field performance advantage.



Optimized for performance without compromise

SKF Explorer steel/steel plain bearings are virtually maintenance-free* and extremely robust – the optimal combination for reducing costs and improving reliability.

Reduce costs

SKF Explorer steel/steel plain bearings are initially lubricated and sealed to eliminate the need for relubrication in applications with low to moderate levels of contamination, such as those in off-highway applications. This generates significant savings by reducing maintenance costs and grease consumption. These virtually maintenance-free bearings also improve reliability by eliminating failures due to missed lubrication intervals and improper lubrication practices. All of this adds up to reduced Total Cost of Ownership (TCO).

Improved robustness and dynamic load rating

Combining improved corrosion resistance, heavy-duty sealing and a relubrication-free design with a steel/steel sliding combination makes SKF Explorer steel/steel plain bearings more robust than ever. Plus, extensive research and testing under extreme loads has resulted in increased dynamic load ratings for SKF Explorer steel/steel plain bearings, an increase of 50% when compared to conventional steel/steel bearings.

End-user benefits

- Reduced Total Cost of Ownership
- Reduced maintenance costs
- Reduced grease consumption
- Increased uptime
- Improved reliability
- Reduced environmental impact
- Retrofitable and interchangeable

OEM benefits

- Improved differentiation in the market
- Reduced operation costs for customers
- Reduced environmental impact
- Reduced warranty claims

* Virtually maintenance-free means that the bearing should function as intended without being relubricated as long as the tribological system is not compromised. The term maintenance-free does not imply that these bearings should not be inspected as part of a regularly scheduled maintenance programme.

SKF Explorer steel/steel plain bearings:

Reduced Total Cost of Ownership (TCO)

SKF Explorer steel/steel plain bearings can offer significantly longer service life compared to conventional steel/steel plain bearings and they are virtually maintenance-free. Direct savings result from fewer bearing replacements, plus longer service life means less machine downtime and lost production for repairs. When combined with the savings associated with not having to relubricate, SKF Explorer steel/steel plain bearings offer reduced total cost of ownership (→ **diagram 1**).

Longer basic rating life

To prove the effectiveness of the new tribological system, SKF Explorer steel/steel plain bearings were tested against conventional steel/steel plain bearings. The extensive laboratory and field tests showed that the relubrication-free SKF Explorer steel/steel plain bearings last significantly longer than the conventional bearings, even when they were frequently relubricated.

The positive results from these tests are the basis for the determination of basic dynamic load ratings and the basic rating life calculation for SKF Explorer steel/steel plain bearings.

Dynamic load ratings

In line with established practice, the dynamic load rating for SKF Explorer steel/steel plain bearings has been determined from extensive research and life testing. The result is a dynamic load rating that is 50% higher compared to conventional steel/steel plain bearings with the specific load factor K being increased from 100 to 150 N/mm^2 (→ **diagram 2**). This opens up a wider range of potential applications and the possibility for downsizing.

Reduce environmental impact

In addition to using non-toxic grease in SKF Explorer steel/steel plain bearings, once they are sealed, the tribological system is so robust that relubrication is not necessary. The result: no additional grease is consumed and no grease is purged from the bearings, which significantly reduces environmental impact.

Wear and corrosion-resistant

SKF Explorer steel/steel plain bearings are phosphated and then undergo further treatment to improve wear resistance and minimize the risk of corrosion.

Diagram 1

Reduced total cost of ownership

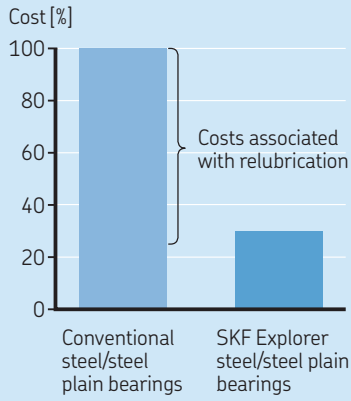

Retrofitable

SKF Explorer steel/steel plain bearings can replace all conventional open or sealed radial steel/steel plain bearings currently available in the market place.

Wide temperature range

The seals and grease can accommodate operating temperatures ranging from –45 to +110 °C *(–45 to +230 °F)*.

features and benefits

Diagram 2

Dynamic load rating

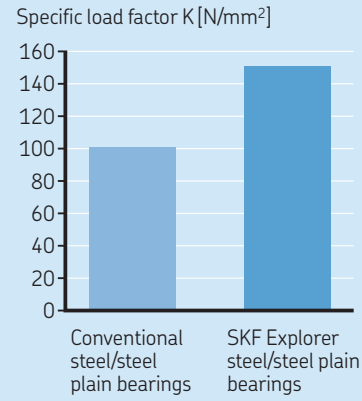

Diagram 3

Test results: seal life

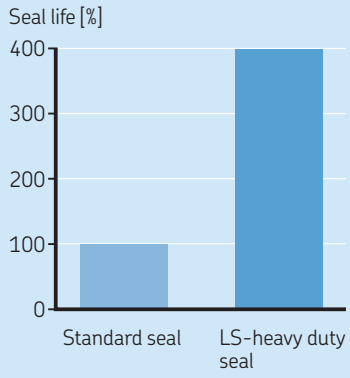

Fig. 1

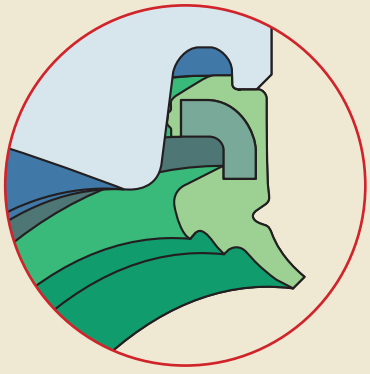

Sealed for protection

SKF Explorer steel/steel plain bearings are equipped with triple-lip heavy-duty contact seals. These seals, designed for contaminated environments, do an excellent job protecting the bearing's tribological system over the life of the bearing. SKF triple lip heavy-duty contact seals are the standard sealing solution for all SKF Explorer steel/steel plain bearings .

To perform well for long periods, the seal is reinforced with a stamped steel insert (→ **fig. 1**). The steel insert protects the seal lips from larger sized contaminants. It also significantly increases the seal's retention forces and stiffness. The design of the seal lips retains the lubricant while virtually eliminating the ingress of contaminants into the bearing (→ **fig. 2**).

Seal life test results

Tests showed that SKF heavy-duty contact seals last up to three times longer than standard seals (→ **diagram 3**). Made of oil and wear-resistant acrylonitrile-butadiene rubber (NBR), the seals are highly resistant to aging and deformation, which further extends the service life of these seals.

Fig. 2

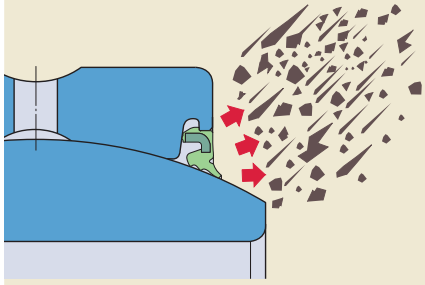

Selection of bearing size

Load ratings

There is no standardized method for determining the load ratings of spherical plain bearings and rod ends, nor is there any standardized definition. As different manufacturers define load ratings differently, it is not possible to compare the load ratings of bearings produced by one manufacturer with those of another.

Basic dynamic load rating

The basic dynamic load rating C is used, together with other influencing factors, to determine the basic rating life of spherical plain bearings and rod ends. As a rule, it represents the maximum load that a spherical plain bearing or rod end can accommodate at room temperature when there is movement between the sliding contact surfaces (→ **fig. 3**). The maximum load in any application should always be considered in relation to the required rating life. The basic dynamic load ratings quoted in the product tables are based on the specific load factor K (→ **table 1**) and the area of the projected sliding surface.

Basic static load rating

The basic static load rating C_0 represents the maximum permissible load that a spherical plain bearing or rod end can accommodate when there is no relative movement between the sliding contact surfaces (→ **fig. 4**). For spherical plain bearings, the basic static load rating represents the maximum load that the bearing can accommodate at room temperature without inadmissible deforming, fracturing or damaging the sliding contact surfaces.

The basic static load ratings quoted for SKF spherical plain bearings are based on a specific static load factor K_0 (→ **table 1**) and the area of the projected sliding surface. It is assumed that the bearing is adequately supported. To fully exploit the static load rating of a spherical plain bearing, it is generally necessary to use shafts and housings made of high-strength materials. The basic static load rating must also be considered when bearings are dynamically loaded and subjected to additional heavy shock loads. The total load in these cases must not exceed the basic static load rating.

For rod ends, it is the strength of the housing at room temperature, under a constant load acting in the direction of the shank axis, that is the determining factor. The basic static load rating represents a safety factor of at least 1,2 relative to the yield strength of the material of the rod end housing, under the above conditions.

Fig. 3

Dynamic bearing load

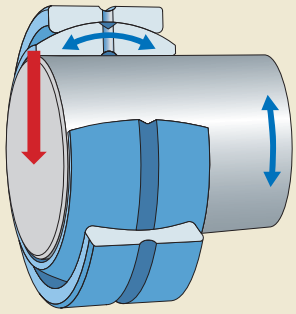

Fig. 4

Static bearing load

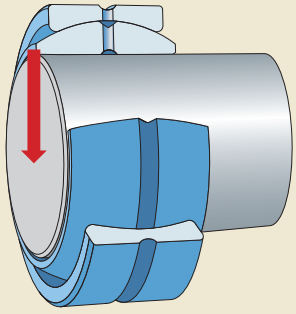

Table 1

Specific load factors

SKF Explorer steel/ steel plain bearings	dyn. K	stat. K_0
–	N/mm²	
Metric sizes	150	500
Inch sizes	150	300

Fig. 5

Angle of oscillation

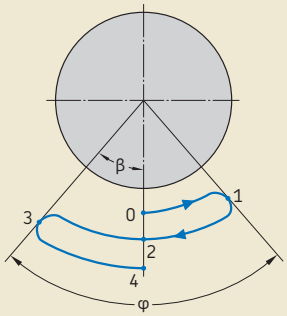

φ = angle of oscillation = 2 β

A complete oscillation is from point 0 to point 4 and = 4 β

Basic rating life

For spherical plain bearings, a lubricant film that fully separates the sliding contact surfaces cannot be formed. Therefore, the sliding contact surfaces make direct contact with each other, resulting in a certain and unavoidable degree of wear. This increases the internal clearance in the bearing.

Regarding the life of spherical plain bearings or rod ends, a distinction is made between the basic rating life and the service life. The basic rating life is a theoretical guideline value used when selecting a bearing for a particular application. Service life depends on the actual operating conditions and is the actual life achieved by an individual bearing in service.

The basic rating life is based on a large number of laboratory tests. Bearings were tested for an operating period until a specific increase in bearing clearance (>0,004 d_k) or friction (μ>0,2) occurred. The basic rating life considers several influencing factors and can be expressed in operating hours or the number of oscillating movements (→ **fig. 5**). In some cases, however, it is not possible to quantify factors such as contamination, corrosion and complex kinematic loads. Therefore, the basic rating life can be attained or exceeded by the majority of many apparently identical spherical plain bearings under the same operating conditions.

The service life cannot be calculated as it is too complex to determine and evaluate all the influencing factors. Therefore, depending on the application conditions, the service life may differ from the basic rating life.

NOTE: By using the SKF Bearing Calculator, it is possible to perform the necessary calculations to select a spherical plain bearing with the click of a mouse.

The SKF Bearing Calculator is available online at *skf.com/bearingcalculator.*

Selection of bearing size

Load

When considering load, a distinction is made between:

- Load direction
  - radial load (→ **fig. 6**)
  - axial load (→ **fig. 7**)
  - combined (axial and radial) load (→ **fig. 8**)
- Type of load
  - dynamic load, i.e. there is relative sliding movement in the loaded bearing
  - static load, i.e. there is no relative movement in the loaded bearing
- Load conditions
  - constant load (→ **fig. 9**), i.e. the direction in which the load is applied does not change and the same part of the bearing (loaded zone) is always subjected to the load
  - alternating load (→ **fig. 10**), i.e. change of load direction so that zones at opposite positions in the bearing are alternately loaded and unloaded

Equivalent dynamic bearing load

The load can be inserted directly into the equation for the specific bearing load p (→ **page 10**), if the magnitude of the load is constant and if the load acting on:

- Radial spherical plain bearings is purely radial
- Rod ends is purely radial and in the direction of the shank axis

In all other cases it is necessary to calculate the equivalent dynamic bearing load P. If the magnitude of the load is not constant, use the equation provided in the section "Variable load and sliding velocity" in the main catalog for spherical plain bearings and rod ends.

Radial spherical plain bearings can accommodate a certain magnitude of axial load F_a in addition to a simultaneously acting radial load F_r (→ **fig. 8**). When the resultant load is constant in magnitude, the equivalent dynamic bearing load can be calculated using

Diagram 4

Factor y for combined loading for radial spherical plain bearings

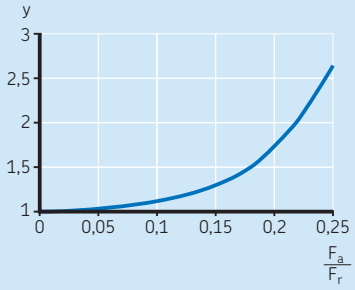

$P = y\ F_r$

where

P = equivalent dynamic bearing load [kN]

F_r = radial component of the load [kN]

y = load factor that depends on the ratio of the axial to the radial load F_a/F_r (→ **diagram 4**)

Fig. 6

Radial load

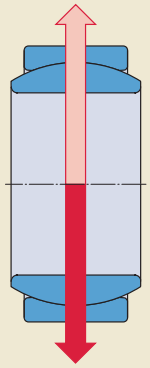

Fig. 7

Axial load

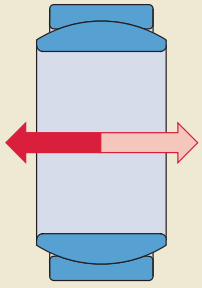

Fig. 8

Combined load

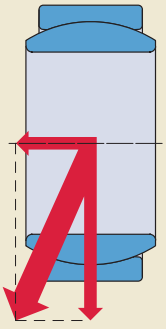

Equivalent static bearing load

If spherical plain bearings and rod ends are subjected to static loads, or very slight alignment movements, then the permissible load is not limited by wear, but by the strength of the sliding contact layer or the strength of the rod end housing.

If the actual load is a combined load, then an equivalent static bearing load must be calculated. For radial spherical plain bearings, it can be calculated using

$$P_0 = y\, F_r$$

where

P_0 = equivalent static bearing load [kN]

F_r = radial component of the load [kN]

y = load factor that depends on the ratio of the axial to the radial load F_a/F_r (→ **diagram 4**)

Permissible loads for rod ends

Rod ends are primarily intended for the support of radial loads acting in the direction of the shank axis. If loads act at angles to the shank axis (→ **fig. 11**), the maximum permissible load is reduced, as additional bending stresses occur in the shank. Under these conditions, consider the design and material used for the rod end housing (→ **table 7, page 17**).

The load acting perpendicular to the direction of the shank axis should never exceed the value of 0,1 C_0. If heavier loads are involved, a larger rod end should be selected.

The maximum permissible load for a rod end in the direction of the shank axis can be calculated using

$$P_{perm} = C_0\, b_2\, b_6$$

where

P_{perm} = maximum permissible load [kN]

C_0 = static load rating [kN]

b_2 = 1 for SKF Explorer steel/steel rod ends, maximum allowable temperature 110 °C

b_6 = factor for the type of load (→ **table 2**)

Table 2

Factor b_6 for rod end load type

Constant

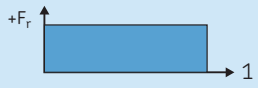

Pulsating magnitude (single direction)

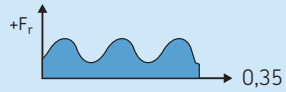

Alternating direction

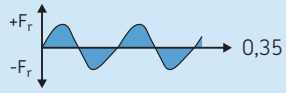

Fig. 9

Constant direction load

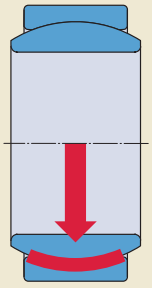

Fig. 10

Alternating direction load

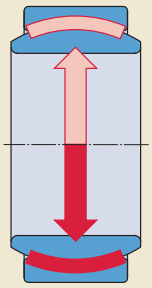

Fig. 11

Rod end under combined load

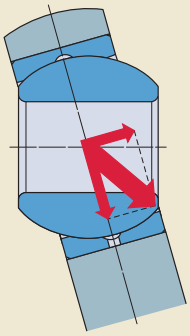

Selection of bearing size

Requisite bearing size

To determine the requisite size of a spherical plain bearing or rod end, it is necessary to know the requisite rating life for the application. This depends on the type of machine, the operating conditions and the demands regarding operational reliability. The following steps can be used to determine requisite bearing size:

1 Use, as a guideline, a value of 2 for the load ratio C/P for spherical plain bearings and rod ends to obtain a requisite basic dynamic load rating C. Compare this value with the basic dynamic load rating of the bearings listed in the product tables.

2 Use the pv diagram (→ **diagram 5**) to check if the selected SKF Explorer steel/steel plain bearing or rod end can be used under the actual load and sliding velocity conditions. The specific bearing load p and the sliding velocity v needed to perform this check can be calculated as explained in the following sections:

2.1 If the pv diagram indicates that the basic rating life equation can be used, proceed to step 3.

2.2 If the pv diagram shows that the pv range is exceeded, select a bearing with a higher load carrying capacity.

3 Calculate the basic rating life (→ **page 12**) and proceed as follows:

3.1 If the calculated rating life is shorter than the requisite rating life, a larger bearing or rod end should be selected and the calculation repeated.

3.2 If the calculated rating life is larger than the requisite rating life, the bearing or rod end can be selected for the application.

The bearing or rod end size is often determined by the dimensions of the associated components. In these cases, check the pv diagram to determine if the product is suitable.

Specific bearing load

The magnitude of the specific bearing load can be calculated using

$$p = K \frac{P}{C}$$

where

p = specific bearing load [N/mm^2]

K = specific load factor for SKF Explorer $K = 150$ [N/mm^2]

P = equivalent dynamic bearing load [kN]

C = basic dynamic load rating [kN]

Mean sliding velocity

The mean sliding velocity for constant movement can be calculated using

$$v = 5{,}82 \times 10^{-7}\, d_k\, \beta\, f$$

where

v = mean sliding velocity [m/s]
When the operation is intermittent (not continuous), the mean sliding velocity should be calculated for a cycle of operation

d_k = inner ring sphere diameter [mm]

β = half the angle of oscillation (→ **fig. 5, page 7**), degrees [°], for rotation $\beta = 90°$

f = frequency of oscillation [min^{-1}], or rotational speed [min^{-1}]

For intermittent movement, the angle of oscillation is usually given in units of time. In this case the mean sliding velocity can be calculated using

$$v = 8{,}73 \times 10^{-6}\, d_k \left(\frac{4\beta}{t}\right)$$

where

β = half the angle of oscillation [°] (→ **fig. 5, page 7**)

t = time taken to pass through complete oscillation [s]

Diagram 5

pv diagram for SKF Explorer steel/steel plain bearings

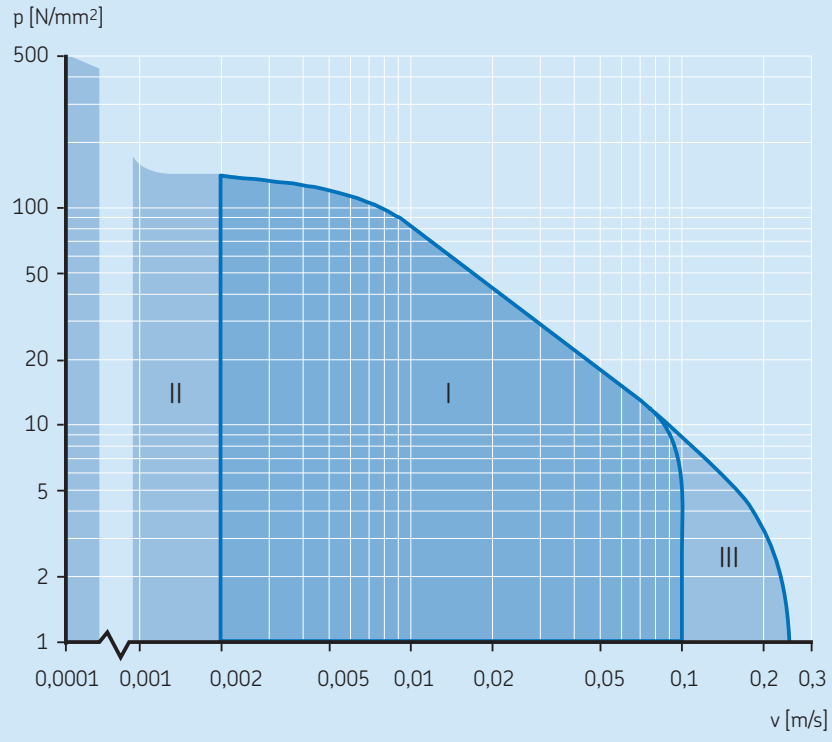

pv operating ranges

I Range where rating life equation is valid

II Quasi-static range; before using the rating life equation, contact the SKF application engineering service

III Possible range of use, e.g. with very good heat dissipation; before using the rating life equation, contact the SKF application engineering service for additional information

Selection of bearing size

Basic rating life calculation

The basic rating life for SKF Explorer steel/steel plain bearings can be calculated using

$$G_h = b_1\, b_2\, b_3\, b_5\, \frac{5}{p^{0,6} \times v^{1,6}}$$

where

G_h = basic rating life, operating hours [h]

b_1 = load condition factor

$b_1 = 1$ for constant direction load

$b_1 = 2$ for alternating direction load

b_2 = temperature factor (→ **diagram 6**)

b_3 = sliding factor (→ **diagram 7**)

b_5 = factor for angle of oscillation (→ **diagram 8**)

p = specific bearing load [N/mm²] (for values of $p < 10$ N/mm² use $p = 10$ N/mm²)

v = mean sliding velocity [m/s]

Diagram 6

Temperature factor b_2 for SKF Explorer steel/steel plain bearings

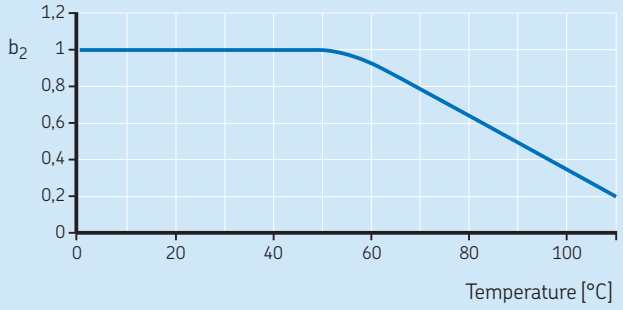

If -45 °C < T < 0 °C, the value of b_2 for T = 0 °C should be used.

Diagram 7

Sliding factor b_3 for SKF Explorer steel/steel plain bearings

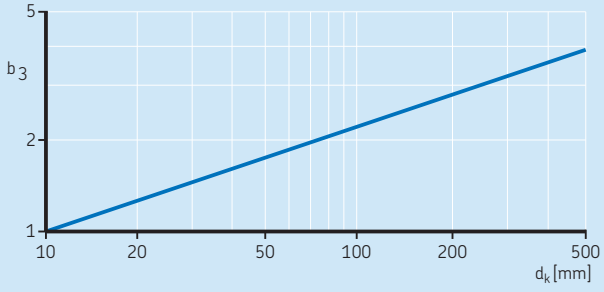

Diagram 8

Factor b_5 for angle of oscillation for SKF Explorer steel/steel plain bearings

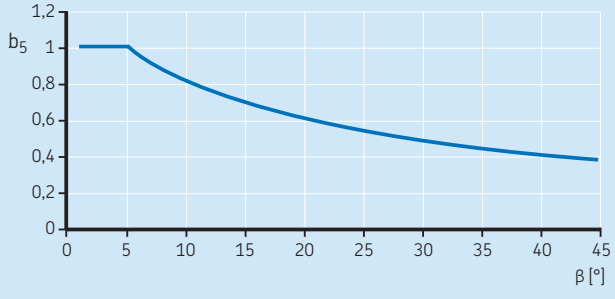

If β > 45°, the value of b_5 for β = 45° should be used.

Calculation examples

The following calculation example illustrates the methods used to determine the requisite bearing size or the basic rating life for an SKF Explorer steel/steel spherical plain bearing.

Linkages of a flap opening system

Given data:

Purely radial load that alternates direction

F_r = 16 kN

Half angle of oscillation: β = 5° (→ **fig. 5**, **page 7**)

Frequency of oscillation: f = 40 min^{-1}

Maximum operating temperature: +80 °C

Requirements:

The bearing must have a basic rating life of 7 000 h and no relubrication should be done.

Calculation and selection:

Because the bearing needs to accommodate alternating loads in an application with a small oscillation angle and without relubrication, an SKF Explorer steel/steel plain bearing is chosen.

If, for the first check, a guideline value of 2 is used for the load ratio C/P (→ **page 10**), the required basic dynamic load rating C for the bearing is

C = 2 P = 32 kN

Bearing GE 20 ESX-2LS, with a dynamic load rating C = 44 kN and a sphere diameter d_k = 29 mm, is chosen from the product table on **page 18**.

To check the suitability of the bearing using the pv diagram (→ **diagram 5**, **page 11**), calculate the specific bearing load using K = 150 N/mm^2 (→ **table 1**, **page 7**).

$$p = K\frac{P}{C} = 150 \times \frac{16}{44} = 54{,}5 \text{ N/mm}^2$$

and the sliding velocity v (**page 10**) using d_k = 29 mm, β = 5° and f = 40 min^{-1}

$$\begin{aligned} v &= 5{,}82 \times 10^{-7}\, d_k\, \beta\, f \\ &= 5{,}82 \times 10^{-7} \times 29 \times 5 \times 40 \\ &= 0{,}0034 \text{ m/s} \end{aligned}$$

The values for p and v lie within the permissible operating range I of the pv diagram (→ **diagram 5**, **page 11**), for SKF Explorer steel/steel plain bearings. To calculate the basic rating life, the values that apply are

b_1 = 2 (alternating direction load, **page 12**)

b_2 = 0,64 (from **diagram 6**, for T = 80 °C)

b_3 = 1,45 (from **diagram 7**, for d_k = 29 mm)

b_5 = 1,0 (from **diagram 8**, for β = 5°)

p = 54,5 N/mm^2

v = 0,0034 m/s

$$G_h = b_1\, b_2\, b_3\, b_5\, \frac{5}{p^{0,6} \times v^{1,6}}$$

$$= 2 \times 0{,}64 \times 1{,}45 \times 1 \times \frac{5}{54{,}5^{0,6} \times 0{,}0034^{1,6}}$$

≈ 7 500 operating hours

Therefore, the selected bearing GE 20 ESX-2LS meets the requirements.

NOTE: The SKF Bearing Calculator incorporates programmes to perform these and many other calculations quickly and accurately. These programmes can be run any number of times to find the best possible solution. The SKF Bearing Calculator is available online at *skf.com/bearingcalculator.*

Mounting and handling instructions

SKF Explorer steel/steel plain bearings should not be lubricated*. These bearings are lubricated at the factory under well-controlled conditions. Introducing a foreign grease will only reduce the effectiveness of the tribological system. When mounting, do not swivel the bearing to the point where grease will be displaced from the bearing.

Skill and cleanliness when mounting are necessary if spherical plain bearings and rod ends are to achieve maximum service life and not fail prematurely.

Bearings and rod ends should only be removed from their packages immediately prior to mounting so that they do not become contaminated. All associated components should be clean and free of any burrs.

When heating the bearing for mounting, do not exceed the temperature limit of 110 °C.

SKF Explorer steel/steel plain bearings come with a notched and fractured outer ring. It is beneficial for service life that the joint is positioned at 90° to the direction of the load (→ **fig. 12**).

Also make sure to check each associated component for dimensional accuracy before the installation process is started. Recommended fits for shaft and housing can be found in **tables 3** and **4**.

Further information

Please refer to the latest catalog for SKF spherical plain bearings and rod ends or to *skf.com* for more general information in regards to:

- Variable load and motion
- Design of bearing arrangements
- Mounting instructions

Fig. 12

Plane of fracture or split and main direction of load

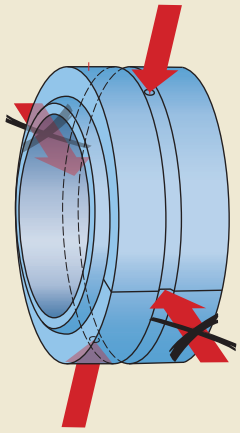

* The bearings still have lubrication holes for manufacturing reasons. Do not apply grease to the bearing. Greasing or re-greasing the bearings will compromise the maintenance-free operation of the bearings and void the service life commitment provided by SKF with the original bearing.

Table 3

Shaft fits[1)]

Operating conditions	Tolerance classes
Radial spherical plain bearings	
Loads of all kinds, interference fit	m6Ⓔ (n6Ⓔ)
Loads of all kinds, clearance or transition fit	h6Ⓔ (hardened shaft)

The tolerance classes in brackets should be selected for very heavily loaded bearings. If selected, be sure that the residual operating clearance is sufficient for proper performance of the bearing or whether a bearing with larger internal clearance must be used.

Table 4

Housing fits[1)]

Operating conditions	Tolerance classes
Radial spherical plain bearings	
Light loads, axial displacement required	H7Ⓔ
Heavy loads	M7Ⓔ (N7Ⓔ)
Light alloy housings	N7Ⓔ

The tolerance classes in brackets should be selected for very heavily loaded bearings. If selected, be sure that the residual operating clearance of the radial bearing is sufficient for proper performance or whether a bearing with larger internal clearance must be used.

[1)] All ISO tolerance classes are valid with the envelope requirement in accordance with ISO 14405-1.

Bearing data – general

The assortment

SKF Explorer steel/steel plain bearings are available in the GE, GEH, GEM and GEZ, GEZH and GEZM series. The sliding surfaces are treated further to improve wear and corrosion resistance. The outer ring is intentionally fractured to allow for the inner ring to be inserted. The bearings are non-separable.

Rod ends of series SI(A) and SA(A) can also be equipped with these spherical plain bearings.

Dimensions

Boundary dimensions of metric SKF Explorer steel/steel plain bearings are in accordance with ISO 12240-1:1998

- GE .. ESX-2LS and GEH .. ESX-2LS series
- GEM .. ESX-2LS series except for the inner ring

Boundary dimensions of inch SKF Explorer steel/steel plain bearings are in accordance with ANSI/ABMA Std. 22.2-1988

- GEZ .. ESX-2LS and GEZH .. ESX-2LS series
- GEZM .. ESX-2LS series except for the inner ring

The dimensions of SKF rod ends are in accordance with the standards SA(A), SI(A) ISO 12240-4:1998 dimension series E, EH.

Male and female threads of SKF rod ends are in accordance with ISO 965-1:1998.

Fig.13

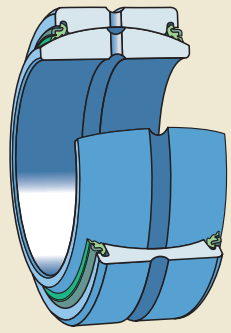

GE .. ESX-2LS

Metric radial spherical plain bearings.
Range: 20 to 300 mm bore.

GEZ .. ESX-2LS

Inch size radial spherical plain bearings.
Range: 1 to 6 inch bore.

Fig.14

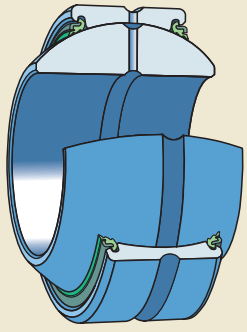

GEH .. ESX-2LS

Metric radial spherical plain bearings as GE .. ESX-2LS, but with wider inner ring and larger outside diameter.
Range: 20 to 120 mm bore.

GEZH .. ESX-2LS

Inch size radial spherical plain bearings, as GEZ .. ESX-2LS, but with wider inner ring and larger outside diameter.
Range: 1,25 to 5,5 inch bore.

Fig.15

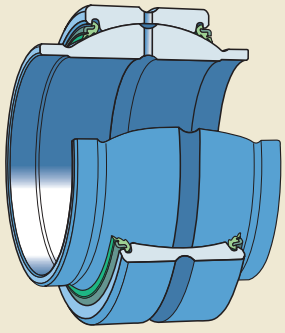

GEM .. ESX-2LS

Metric radial spherical plain bearings, as GE .. ESX-2LS, but with a cylindrical extension on both sides of the inner ring.
Range: 20 to 80 mm bore.

GEZM .. ESX-2LS

Inch size radial spherical plain bearings, as GEZ .. ESX-2LS, but with a cylindrical extension on both sides of the inner ring.
Range: 1 to 6 inch bore.

Tolerances

SKF metric radial spherical plain bearings are manufactured to tolerances in accordance with ISO 12240-1:1998. SKF inch radial spherical plain bearings are manufactured to tolerances in accordance with ANSI/ABMA Std. 22.2-1988.

Radial internal clearance

SKF Explorer steel/steel radial plain bearings are produced with normal radial internal clearance as standard. The actual values are listed in **tables 5** and **6**.

Materials

SKF Explorer steel/steel plain bearings are made of high grade carbon chromium steel that has been hardened, ground and phosphated. They are equipped with two triple-lip heavy-duty contact seals made of acrylonitrile-butadiene rubber (NBR). SKF Explorer rod end housings are made of the materials listed in **table 7**.

The rod end housings are equipped with lubrication holes due to manufacturing reasons, which are plugged to avoid contamination and relubrication.

Permissible operating temperature range

SKF Explorer steel/steel radial plain bearings and rod ends have a permissible operating temperature range of –45 to +110 °C.

Table 5

Radial internal clearance for SKF Explorer steel/steel spherical plain bearings, metric sizes

Bore diameter		Radial internal clearance	
d		Normal	
over	incl.	min	max
mm			
–	12	32	68
12	20	40	82
20	35	50	100
35	60	60	120
60	90	72	142
90	140	85	165
140	200	100	192
200	240	110	214
240	300	125	239

Bearings in the GEH series, with a bore diameter d = 20, 35, 60 and 90 mm, have a radial internal clearance range corresponding to the next larger diameter range.

Table 6

Radial internal clearance for SKF Explorer steel/steel spherical plain bearings, inch sizes

Bore diameter		Radial internal clearance	
d		Normal	
over	incl.	min	max
mm			
–	0,625	50	150
0,625	2	80	180
2	3	100	200
3	6	130	230

Table 7

Housing materials for rod ends

Series	Size	Material	Material No.
SA(A), SI (A)	6 to 80	Heat treatable steel C45V zinc coated	1.0503

SKF Explorer steel/steel plain bearings

Radial spherical plain bearings, metric sizes

d **20** – **120** mm

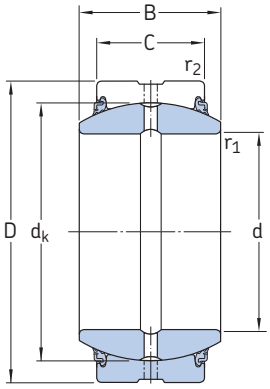

GE .. ESX-2LS

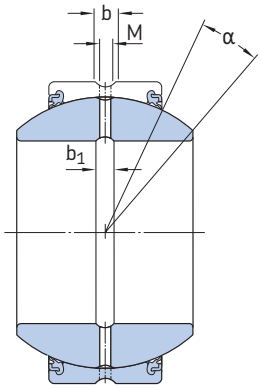

GEH .. ESX-2LS

Principal dimensions				Angle of tilt[1]	Basic load ratings dynamic	static	Mass	Designation
d	D	B	C	α	C	C_0		
mm				°	kN		kg	–
20	35	16	12	9	44	146	0,065	**GE 20 ESX-2LS**
	42	25	16	17	72	240	0,16	**GEH 20 ESX-2LS**
25	42	20	16	7	72	240	0,12	**GE 25 ESX-2LS**
	47	28	18	17	93	310	0,2	**GEH 25 ESX-2LS**
30	47	22	18	6	93	310	0,16	**GE 30 ESX-2LS**
	55	32	20	17	120	400	0,35	**GEH 30 ESX-2LS**
35	55	25	20	6	120	400	0,23	**GE 35 ESX-2LS**
	62	35	22	15	150	500	0,47	**GEH 35 ESX-2LS**
40	62	28	22	6	150	500	0,32	**GE 40 ESX-2LS**
	68	40	25	17	190	640	0,61	**GEH 40 ESX-2LS**
45	68	32	25	7	190	640	0,46	**GE 45 ESX-2LS**
	75	43	28	14	236	780	0,8	**GEH 45 ESX-2LS**
50	75	35	28	6	236	780	0,56	**GE 50 ESX-2LS**
	90	56	36	17	365	1 220	1,6	**GEH 50 ESX-2LS**
60	90	44	36	6	365	1 220	1,1	**GE 60 ESX-2LS**
	105	63	40	17	465	1 560	2,4	**GEH 60 ESX-2LS**
70	105	49	40	6	465	1 560	1,55	**GE 70 ESX-2LS**
	120	70	45	16	600	2 000	3,4	**GEH 70 ESX-2LS**
80	120	55	45	5	600	2 000	2,3	**GE 80 ESX-2LS**
	130	75	50	14	735	2 450	4,1	**GEH 80 ESX-2LS**
90	130	60	50	5	735	2 450	2,75	**GE 90 ESX-2LS**
	150	85	55	15	915	3 050	6,3	**GEH 90 ESX-2LS**
100	150	70	55	6	915	3 050	4,4	**GE 100 ESX-2LS**
	160	85	55	13	980	3 250	6,8	**GEH 100 ESX-2LS**
110	160	70	55	6	980	3 250	4,8	**GE 110 ESX-2LS**
	180	100	70	12	1 430	4 750	11	**GEH 110 ESX-2LS**
120	180	85	70	6	1 430	4 750	8,25	**GE 120 ESX-2LS**
	210	115	70	16	1 600	5 400	15	**GEH 120 ESX-2LS**[2]

[1] To fully utilize the angle of tilt, the shaft shoulder should not be larger than $d_{a\ max}$

[2] Seal design may vary

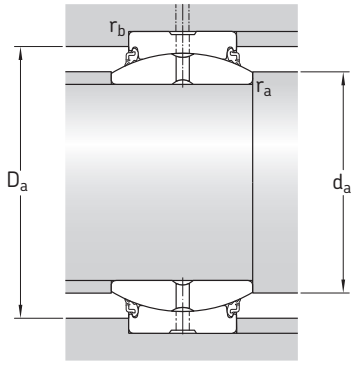

Dimensions						Abutment and fillet dimensions					
d	d_k	b, b_1	M	r_1 min.	r_2 min.	d_a min.	d_a max.	D_a min.	D_a max.	r_a max.	r_b max.
mm						mm					
20	29	3,1	2	0,3	0,3	22,1	24,2	30,9	33,2	0,3	0,3
	35,5	3,1	2	0,3	0,6	22,7	25,2	36,9	39,2	0,3	0,6
25	35,5	3,1	2	0,6	0,6	28,2	29,3	36,9	39,2	0,6	0,6
	40,7	3,1	2	0,6	0,6	28,6	29,5	41,3	44	0,6	0,6
30	40,7	3,1	2	0,6	0,6	33,3	34,2	41,3	44	0,6	0,6
	47	3,9	2,5	0,6	1	33,7	34,4	48,5	50,9	0,6	1
35	47	3,9	2,5	0,6	1	38,5	39,8	48,5	50,9	0,6	1
	53	3,9	2,5	0,6	1	38,8	39,8	54,5	57,8	0,6	1
40	53	3,9	2,5	0,6	1	43,6	45	54,5	57,8	0,6	1
	60	4,6	3	0,6	1	44,1	44,7	61	63,6	0,6	1
45	60	4,6	3	0,6	1	49,4	50,8	61	63,6	0,6	1
	66	4,6	3	0,6	1	49,8	50,1	66,2	70,5	0,6	1
50	66	4,6	3	0,6	1	54,6	56	66,2	70,5	0,6	1
	80	6,2	4	0,6	1	55,8	57,1	79,7	84,2	0,6	1
60	80	6,2	4	1	1	66,4	66,8	79,7	84,2	1	1
	92	7,7	4	1	1	67	67	92	99	1	1
70	92	7,7	4	1	1	76,7	77,9	92	99	1	1
	105	7,7	4	1	1	77,5	78,3	104,4	113,8	1	1
80	105	7,7	4	1	1	87,1	89,4	104,4	113,8	1	1
	115	9,5	5	1	1	87,2	87,2	112,9	123,5	1	1
90	115	9,5	5	1	1	97,4	98,1	112,9	123,5	1	1
	130	11,3	5	1	1	98,2	98,4	131	143,2	1	1
100	130	11,3	5	1	1	107,8	109,5	131	143,2	1	1
	140	11,5	5	1	1	108,1	111,2	141,5	153,3	1	1
110	140	11,5	5	1	1	118	121	141,5	153	1	1
	160	13,5	6	1	1	119,5	124,5	157,5	172	1	1
120	160	13,5	6	1	1	129,5	135,5	157,5	172	1	1
	180	13,5	6	1	1	130	138,5	180	202,5	1	1

SKF Explorer steel/steel plain bearings

Radial spherical plain bearings, metric sizes

d **140** – **300** mm

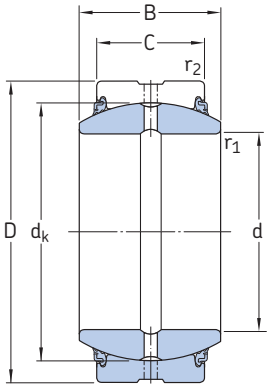

GE .. ESX-2LS

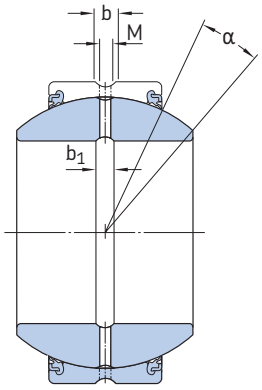

GEH .. ESX-2LS

Principal dimensions				Angle of tilt[1]	Basic load ratings dynamic	static	Mass	Designation
d	D	B	C	α	C	C_0		
mm				°	kN		kg	–
140	210	90	70	7	1 600	5 400	11	**GE 140 ESX-2LS**[2]
160	230	105	80	8	2 040	6 800	14	**GE 160 ESX-2LS**[2]
180	260	105	80	6	2 280	7 650	18,5	**GE 180 ESX-2LS**[2]
200	290	130	100	7	3 200	10 600	28	**GE 200 ESX-2LS**[2]
220	320	135	100	8	3 550	11 600	35,5	**GE 220 ESX-2LS**[2]
240	340	140	100	8	3 800	12 700	40	**GE 240 ESX-2LS**[2]
260	370	150	110	7	4 550	15 300	51,5	**GE 260 ESX-2LS**[2]
280	400	155	120	6	5 400	18 000	65	**GE 280 ESX-2LS**[2]
300	430	165	120	7	5 700	19 000	78,5	**GE 300 ESX-2LS**[2]

[1] To fully utilize the angle of tilt, the shaft shoulder should not be larger than $d_{a\ max}$
[2] Seal design may vary

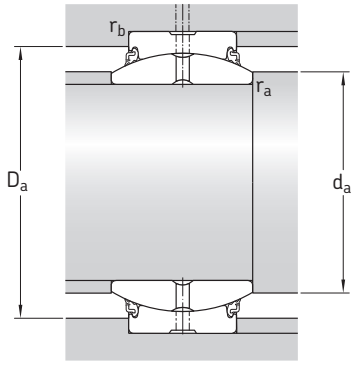

Dimensions						Abutment and fillet dimensions					
d	d_k	b, b_1	M	r_1 min.	r_2 min.	d_a min.	d_a max.	D_a min.	D_a max.	r_a max.	r_b max.
mm						mm					
140	180	13,5	6	1	1	149	155,5	180	202,5	1	1
160	200	13,5	6	1	1	169,5	170	197	222	1	1
180	225	13,5	6	1,1	1,1	191	199	224,5	250,5	1	1
200	250	15,5	7	1,1	1,1	212,5	213,5	244,5	279,5	1	1
220	275	15,5	7	1,1	1,1	232,5	239,5	271	309,5	1	1
240	300	15,5	7	1,1	1,1	252,5	265	298	329,5	1	1
260	325	15,5	7	1,1	1,1	273	288	321,5	359	1	1
280	350	15,5	7	1,1	1,1	294	313,5	344,5	388,5	1	1
300	375	15,5	7	1,1	1,1	314	336,5	371	418,5	1	1

SKF Explorer steel/steel plain bearings

Radial spherical plain bearings, inch sizes

d **1** – **6** in.

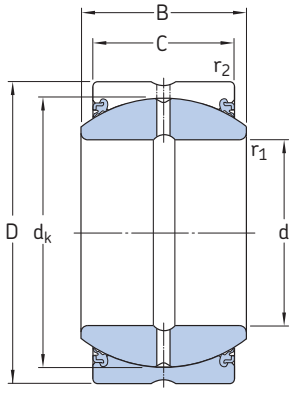

GEZ .. ESX-2LS

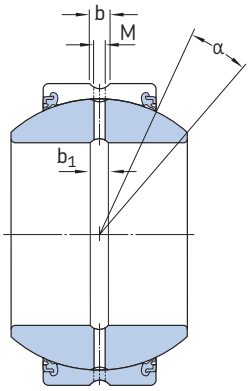

GEZH .. ESX-2LS

Principal dimensions				Angle of tilt[1]	Basic load ratings dynamic	static	Mass	Designation
d	D	B	C	α	C	C_0		
in./*mm*				°	lbf/*kN*		lb/*kg*	–
1	1.6250	0.875	0.750	6	18 600	37 350	0.26	**GEZ 100 ESX-2LS**
25,4	*41,275*	*22,225*	*19,05*		*83*	*166*	*0,12*	
1.25	2.0000	1.093	0.937	6	29 000	58 500	0.51	**GEZ 104 ESX-2LS**
31,75	*50,8*	*27,762*	*23,8*		*129*	*260*	*0,23*	
	2.4375	1.390	1.125	8	41 500	84 380	1.19	**GEZH 104 ESX-2LS**
	61,913	*35,306*	*28,575*		*186*	*375*	*0,54*	
1.375	2.1875	1.187	1.031	5	35 100	69 750	0.77	**GEZ 106 ESX-2LS**
34,925	*55,563*	*30,15*	*26,187*		*156*	*310*	*0,35*	
1.5	2.4375	1.312	1.125	6	41 500	84 380	0.93	**GEZ 108 ESX-2LS**
38,1	*61,913*	*33,325*	*28,575*		*186*	*375*	*0,42*	
	2.8125	1.580	1.312	7	57 000	114 750	1.75	**GEZH 108 ESX-2LS**
	71,438	*40,132*	*33,325*		*255*	*510*	*0,79*	
1.75	2.8125	1.531	1.312	6	57 000	114 750	1.40	**GEZ 112 ESX-2LS**
44,45	*71,438*	*38,887*	*33,325*		*255*	*510*	*0,64*	
	3.1875	1.820	1.500	7	75 000	150 750	2.50	**GEZH 112 ESX-2LS**
	80,963	*46,228*	*38,1*		*335*	*670*	*1,13*	
2	3.1875	1.750	1.500	6	75 000	150 750	2.05	**GEZ 200 ESX-2LS**
50,8	*80,963*	*44,45*	*38,1*		*335*	*670*	*0,93*	
	3.5625	2.070	1.687	8	95 000	191 250	3.50	**GEZH 200 ESX-2LS**
	90,488	*52,578*	*42,85*		*425*	*850*	*1,6*	
2.25	3.5625	1.969	1.687	6	95 000	191 250	2.85	**GEZ 204 ESX-2LS**
57,15	*90,488*	*50,013*	*42,85*		*425*	*850*	*1,3*	
	3.9375	2.318	1.875	8	116 000	234 000	4.65	**GEZH 204 ESX-2LS**
	100,013	*58,877*	*47,625*		*520*	*1040*	*2,1*	
2.5	3.9375	2.187	1.875	6	116 000	234 000	4.10	**GEZ 208 ESX-2LS**
63,5	*100,013*	*55,55*	*47,625*		*520*	*1 040*	*1,85*	
	4.3750	2.545	2.062	8	140 000	285 750	6.30	**GEZH 208 ESX-2LS**
	111,125	*64,643*	*52,375*		*630*	*1 270*	*2,85*	
2.75	4.3750	2.406	2.062	6	140 000	285 750	5.30	**GEZ 212 ESX-2LS**
69,85	*111,125*	*61,112*	*52,375*		*630*	*1 270*	*2,4*	
	4.7500	2.790	2.250	8	170 000	337 500	8.05	**GEZH 212 ESX-2LS**
	120,65	*70,866*	*57,15*		*750*	*1 500*	*3,65*	

[1] To fully utilize the angle of tilt, the shaft shoulder should not be larger than $d_{a\ max}$

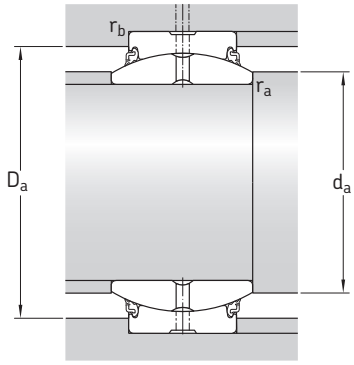

Dimensions							Abutment and fillet dimensions					
d	d_k	b	b_1	M	r_1[1] min.	r_2[2] min.	d_a min.	d_a max.	D_a min.	D_a max.	r_a max.	r_b max
in./*mm*							in./*mm*					
1	1.4370	0.126	0.118	0.098	0.012	0.039	1.08	1.14	1.39	1.48	0,012	0.039
25,4	*36,5*	*3,2*	*3*	*2,5*	*0,3*	*1*	*27,5*	*29*	*35,2*	*37,7*	*0,3*	*1*
1.25	1.7950	0.189	0.197	0.157	0.024	0.039	1.37	1.43	1.76	1.85	0.024	0.039
31,75	*45,593*	*4,8*	*5*	*4*	*0,6*	*1*	*34,8*	*36,2*	*44,8*	*47*	*0,6*	*1*
	2.1550	0.189	0.197	0.157	0.039	0.039	1.43	1.65	2.06	2.28	0.039	0.039
	54,737	*4,8*	*5*	*4*	*1*	*1*	*36,2*	*41,8*	*52,3*	*58*	*1*	*1*
1.375	1.9370	0.189	0.197	0.157	0.024	0.039	1.50	1.53	1.85	2.04	0.024	0.039
34,925	*49,2*	*4,8*	*5*	*4*	*0,6*	*1*	*38,1*	*38,9*	*47,1*	*51,7*	*0,6*	*1*
1.5	2.1550	0.189	0.197	0.157	0.024	0.039	1.63	1.71	2.06	2.28	0.024	0.039
38,1	*54,737*	*4,8*	*5*	*4*	*0,6*	*1*	*41,4*	*43,4*	*52,3*	*58*	*0,6*	*1*
	2.5150	0.189	0.197	0.157	0.039	0.039	1.69	1.96	2.41	2.65	0.039	0.039
	63,881	*4,8*	*5*	*4*	*1*	*1*	*42,8*	*49,7*	*61,3*	*67,4*	*1*	*1*
1.75	2.5150	0.189	0.197	0.157	0.024	0.039	1.91	2.00	2.41	2.65	0.024	0.039
44,45	*63,881*	*4,8*	*5*	*4*	*0,6*	*1*	*48,5*	*50,7*	*61,3*	*67,4*	*0,6*	*1*
	2.8750	0.189	0.197	0.157	0.059	0.039	2.00	2.22	2.85	2.99	0.059	0.039
	73,025	*4,8*	*5*	*4*	*1,5*	*1*	*50,9*	*56,5*	*72,4*	*75,9*	*1,5*	*1*
2	2.8750	0.189	0.197	0.157	0.024	0.039	2.17	2.28	2.85	2.99	0.024	0.039
50,8	*73,025*	*4,8*	*5*	*4*	*0,6*	*1*	*55,1*	*57,9*	*72,4*	*75,9*	*0,6*	*1*
	3.2350	0.224	0.197	0.157	0.059	0.039	2.26	2.48	3.11	3.36	0.059	0.039
	82,169	*5,7*	*5*	*4*	*1,5*	*1*	*57,5*	*63,1*	*79*	*85,3*	*1,5*	*1*
2.25	3.2350	0.224	0.197	0.157	0.024	0.039	2.43	2.57	3.11	3.36	0.024	0.039
57,15	*82,169*	*5,7*	*5*	*4*	*0,6*	*1*	*61,7*	*65,2*	*79*	*85,3*	*0,6*	*1*
	3.5900	0.354	0.315	0.256	0.059	0.039	2.52	2.74	3.43	3.73	0.059	0.039
	91,186	*9*	*8*	*6,5*	*1,5*	*1*	*64,1*	*69,6*	*87*	*94,7*	*1,5*	*1*
2.5	3.5900	0.354	0.315	0.256	0.024	0.039	2.69	2.85	3.43	3.73	0.024	0.039
63,5	*91,186*	*9*	*8*	*6,5*	*0,6*	*1*	*68,3*	*72,3*	*87*	*94,7*	*0,6*	*1*
	3.9500	0.354	0.315	0.256	0.079	0.039	2.83	3.02	3.78	4.16	0.079	0.039
	100,33	*9*	*8*	*6,5*	*2*	*1*	*72*	*76,7*	*96*	*105,7*	*2*	*1*
2.75	3.9500	0.354	0.315	0.256	0.024	0.039	2.95	3.13	3.78	4.16	0.024	0.039
69,85	*100,33*	*9*	*8*	*6,5*	*0,6*	*1*	*74,9*	*79,6*	*96*	*105,7*	*0,6*	*1*
	4.3120	0.354	0.315	0.256	0.079	0.039	3.09	3.29	4.13	4.53	0.079	0.039
	109,525	*9*	*8*	*6,5*	*2*	*1*	*78,6*	*83,5*	*104,8*	*115*	*2*	*1*

[1] Equal to maximum shaft fillet radius $r_{a\,max}$
[2] Equal to maximum housing fillet radius $r_{b\,max}$

SKF Explorer steel/steel plain bearings

Radial spherical plain bearings, inch sizes

d **1** – **6** in.

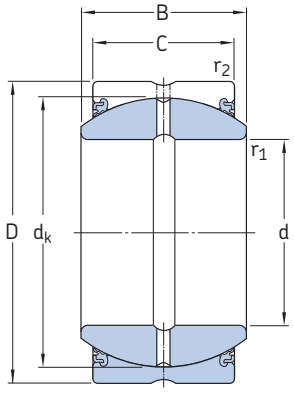

GEZ .. ESX-2LS

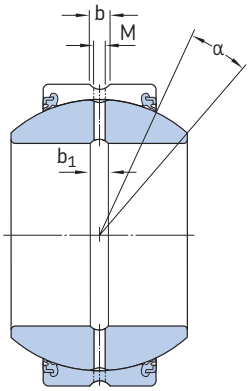

GEZH .. ESX-2LS

Principal dimensions				Angle of tilt[1]	Basic load ratings dynamic	static	Mass	Designation
d	D	B	C	α	C	C_0		
in./*mm*				°	lbf/*kN*		lb/*kg*	–
3	4.7500	2.625	2.250	6	170 000	337 500	6.85	**GEZ 300 ESX-2LS**
76,2	*120,65*	*66,675*	*57,15*		*750*	*1 500*	*3,1*	
	5.1250	3.022	2.437	8	196 000	396 000	10.0	**GEZH 300 ESX-2LS**
	130,175	*76,759*	*61,9*		*880*	*1 760*	*4,55*	
3.25	5.1250	2.844	2.437	6	196 000	396 000	8.40	**GEZ 304 ESX-2LS**
82,55	*130,175*	*72,238*	*61,9*		*880*	*1 760*	*3,8*	
	5.5000	3.265	2.625	9	228 000	459 000	12.4	**GEZH 304 ESX-2LS**
	139,7	*82,931*	*66,675*		*1 020*	*2 040*	*5,6*	
3.5	5.5000	3.062	2.625	6	228 000	459 000	10.6	**GEZ 308 ESX-2LS**
88,9	*139,7*	*77,775*	*66,675*		*1 020*	*2040*	*4,8*	
	5.8750	3.560	2.812	9	265 000	531 000	15.0	**GEZH 308 ESX-2LS**
	149,225	*90,424*	*71,425*		*1 180*	*2360*	*6,8*	
3.75	5.8750	3.281	2.812	6	265 000	531 000	12.8	**GEZ 312 ESX-2LS**
95,25	*149,225*	*83,337*	*71,425*		*1 180*	*2 360*	*5,8*	
	6.2500	3.738	3.000	9	305 000	596 250	17.9	**GEZH 312 ESX-2LS**
	158,75	*94,945*	*76,2*		*1 340*	*2 650*	*8,1*	
4	6.2500	3.500	3.000	6	305 000	596 250	15.5	**GEZ 400 ESX-2LS**
101,6	*158,75*	*88,9*	*76,2*		*1 340*	*2650*	*7*	
	7.0000	4.225	3.375	9	375 000	765 000	30.0	**GEZH 400 ESX-2LS**
	177,8	*107,315*	*85,725*		*1 700*	*3 400*	*13,5*	
4.5	7.0000	3.937	3.375	6	375 000	765 000	21.5	**GEZ 408 ESX-2LS**
114,3	*177,8*	*100*	*85,725*		*1 700*	*3 400*	*9,8*	
	7.7500	4.690	3.750	9	465 000	933 750	36.0	**GEZH 408 ESX-2LS**
	196,85	*119,126*	*95,25*		*2 080*	*4150*	*16,5*	
4.75	7.3750	4.156	3.562	6	425 000	843 750	25.5	**GEZ 412 ESX-2LS**
120,65	*187,325*	*105,562*	*90,475*		*1 900*	*3 750*	*11,5*	
5	7.7500	4.375	3.750	6	465 000	933 750	30.0	**GEZ 500 ESX-2LS**
127	*196,85*	*111,125*	*95,25*		*2 080*	*4150*	*13,5*	
5.5	8.7500	4.950	4.125	7	585 000	1 170 000	45.0	**GEZH 508 ESX-2LS**
139,7	*222,25*	*125,73*	*104,775*		*2 600*	*5200*	*20,5*	
6	8.7500	4.750	4.125	5	585 000	1 170 000	38.5	**GEZ 600 ESX-2LS**
152,4	*222,25*	*120,65*	*104,775*		*2 600*	*5 200*	*17,5*	

[1] To fully utilize the angle of tilt, the shaft shoulder should not be made larger than $d_{a\ max}$

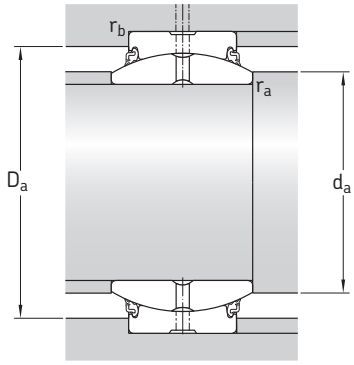

Dimensions							Abutment and fillet dimensions					
d	d_k	b	b_1	M	r_1[1] min.	r_2[2] min.	d_a min.	d_a max.	D_a min.	D_a max.	r_a max.	r_b max.
in./*mm*							in./*mm*					
3	4.3120	0.354	0.315	0.256	0,024	0.039	3.20	3.42	4.13	4.53	0.024	0.039
76,2	*109,525*	*9*	*8*	*6,5*	*0,6*	*1*	*81,4*	*86,9*	*104,8*	*115*	*0,6*	*1*
	4.6750	0.366	0.315	0.256	0.079	0.039	3.35	3.57	4.50	4.90	0.079	0.039
	118,745	*9,3*	*8*	*6,5*	*2*	*1*	*85,1*	*90,6*	*114,2*	*124,4*	*2*	*1*
3.25	4.6750	0.366	0.315	0.256	0.024	0.039	3.46	3.71	4.50	4.90	0.024	0.039
82,55	*118,745*	*9,3*	*8*	*6,5*	*0,6*	*1*	*88*	*94,2*	*114,2*	*124,4*	*0,6*	*1*
	5.0400	0.413	0.315	0.256	0.079	0.039	3.65	3.84	4.83	5.27	0.079	0.039
	128,016	*10,5*	*8*	*6,5*	*2*	*1*	*92,7*	*97,5*	*122,8*	*133,8*	*2*	*1*
3.5	5.0400	0.413	0.315	0.256	0.024	0.039	3.72	4.00	4.83	5.27	0.024	0.039
88,9	*128,016*	*10,5*	*8*	*6,5*	*0,6*	*1*	*94,6*	*101,7*	*122,8*	*133,8*	*0,6*	*1*
	5.3900	0.413	0.315	0.256	0.079	0.039	3.91	4.04	5.17	5.63	0.079	0.039
	136,906	*10,5*	*8*	*6,5*	*2*	*1*	*99,3*	*102,5*	*131,4*	*143,1*	*2*	*1*
3.75	5.3900	0.413	0.315	0.256	0.024	0.039	3.98	4.28	5.17	5.63	0.024	0.039
95,25	*136,906*	*10,5*	*8*	*6,5*	*0,6*	*1*	*101,2*	*108,6*	*131,4*	*143,1*	*0,6*	*1*
	5.7500	0.413	0.394	0.315	0.079	0.039	4.17	4.37	5.49	6.00	0.079	0.039
	146,05	*10,5*	*10*	*8*	*2*	*1*	*105,8*	*110,9*	*139,5*	*152,5*	*2*	*1*
4	5.7500	0.413	0.394	0.315	0.024	0.039	4.25	4.55	5.49	6.00	0.024	0.039
101,6	*146,05*	*10,5*	*10*	*8*	*0,6*	*1*	*108*	*115,5*	*139,5*	*152,5*	*0,6*	*1*
	6.4750	0.433	0.394	0.315	0.079	0.043	4.45	4.90	6.18	6.73	0.079	0.043
	164,465	*11*	*10*	*8*	*2*	*1,1*	*113*	*124,5*	*157*	*170,99*	*2*	*1,1*
4.5	6.4750	0.433	0.394	0.315	0.039	0.043	4.82	5.14	6.18	6.73	0.039	0.043
114,3	*164,465*	*11*	*10*	*8*	*1*	*1,1*	*122,5*	*130,5*	*157*	*171*	*1*	*1,1*
	7.1900	0.433	0.394	0.315	0.079	0.043	4.96	5.45	6.91	7.42	0.079	0.043
	182,626	*11*	*10*	*8*	*2*	*1,1*	*126*	*138,4*	*175,5*	*188,5*	*2*	*1,1*
4.75	6.8250	0.433	0.394	0.315	0.039	0.043	5.08	5.41	6.56	7.05	0.039	0.043
120,65	*173,355*	*11*	*10*	*8*	*1*	*1,1*	*129*	*137,5*	*166,5*	*179*	*1*	*1,1*
5	7.1900	0.433	0.394	0.315	0.039	0.043	5.33	5.69	6.91	7.42	0.039	0.043
127	*182,626*	*11*	*10*	*8*	*1*	*1,1*	*135,5*	*144,5*	*175,5*	*188,5*	*1*	*1,1*
5.5	8.1560	0.591	0.433	0.315	0.079	0.043	5.98	6.46	7.78	8.41	0.079	0.043
139,7	*207,162*	*15*	*11*	*8*	*2*	*1,1*	*152*	*164*	*197,5*	*213,5*	*2*	*1,1*
6	8.1560	0.591	0.433	0.315	0.039	0.043	6.34	6.61	7.78	8.41	0.039	0.043
152,4	*207,162*	*15*	*11*	*8*	*1*	*1,1*	*161*	*168*	*197,5*	*213,5*	*1*	*1,1*

[1] Equal to maximum shaft fillet radius $r_{a\,max}$
[2] Equal to maximum housing fillet radius $r_{b\,max}$

SKF Explorer steel/steel plain bearings

Radial spherical plain bearings with an extended inner ring, metric sizes

d **20** – **80** mm

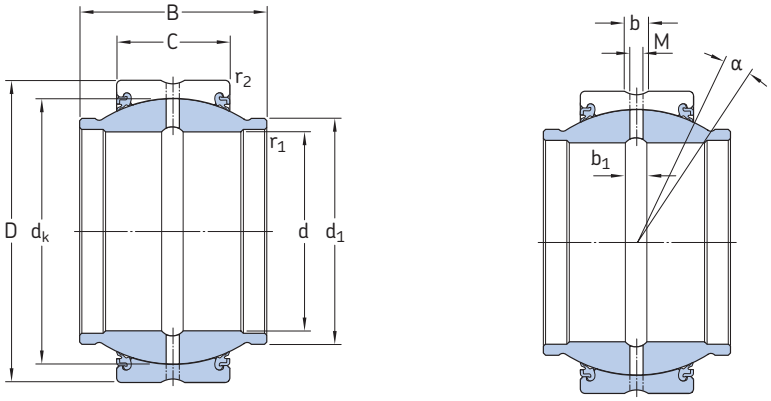

GEM .. ESX-2LS

Principal dimensions				Angle of tilt	Basic load ratings dynamic	static	Mass	Designation
d	D	B	C	α	C	C_0		
mm				°	kN		kg	–
20	35	24	12	6	44	146	0,073	**GEM 20 ESX-2LS**
25	42	29	16	4	72	240	0,13	**GEM 25 ESX-2LS**
30	47	30	18	4	93	310	0,17	**GEM 30 ESX-2LS**
35	55	35	20	4	120	400	0,25	**GEM 35 ESX-2LS**
40	62	38	22	4	150	500	0,35	**GEM 40 ESX-2LS**
45	68	40	25	4	190	640	0,49	**GEM 45 ESX-2LS**
50	75	43	28	4	236	780	0,60	**GEM 50 ESX-2LS**
60	90	54	36	3	365	1 220	1,15	**GEM 60 ESX-2LS**
70	105	65	40	4	465	1 560	1,65	**GEM 70 ESX-2LS**
80	120	74	45	4	600	2 000	2,50	**GEM 80 ESX-2LS**

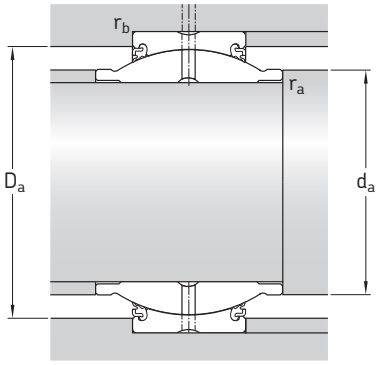

Dimensions							Abutment and fillet dimensions					
d	d_k	d_1	b, b_1	M	r_1 min.	r_2 min.	d_a min.	d_a max.	D_a min.	D_a max.	r_a max.	r_b max.
mm							mm					
20	29	24	3,1	2	0,3	0,3	23	24	30,9	33,2	0,3	0,3
25	35,5	29	3,1	2	0,3	0,6	28,3	29	36,9	39,2	0,3	0,6
30	40,7	34	3,1	2	0,3	0,6	33,5	34	41,3	44	0,3	0,6
35	47	40	3,9	2,5	0,6	1	38,8	40	48,5	50,9	0,6	1
40	53	45	3,9	2,5	0,6	1	44	45	54,5	57,8	0,6	1
45	60	52	4,6	3	0,6	1	49,6	52	61	63,6	0,6	1
50	66	57	4,6	3	0,6	1	54,8	57	66,2	70,5	0,6	1
60	80	68	6,2	4	0,6	1	65,4	68	79,7	84,2	0,6	1
70	92	78	7,7	4	0,6	1	75,7	78	92	99	0,6	1
80	105	90	7,7	4	0,6	1	86,1	90	104,4	113,8	0,6	1

SKF Explorer steel/steel plain bearings

Radial spherical plain bearings with an extended inner ring, inch sizes

d **1** – **6** in.

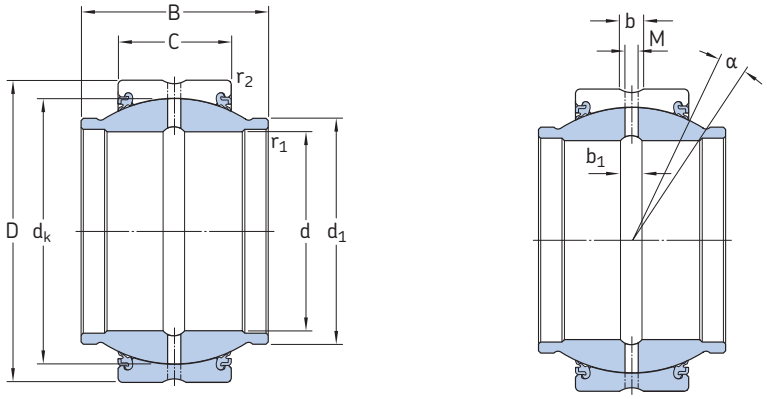

GEZM .. ESX-2LS

Principal dimensions				Angle of tilt[1]	Basic load ratings dynamic	static	Mass	Designation
d	D	B	C	α	C	C_0		
in./*mm*				°	lbf/*kN*		lb/*kg*	–
1 *25,4*	1.6250 *41,275*	1.500 *38,1*	0.750 *19,05*	5	18 600 *83*	37 350 *166*	0.33 *0,15*	**GEZM 100 ESX-2LS**
1.25 *31,75*	2.0000 *50,8*	1.875 *47,625*	0.937 *23,8*	5	29 000 *129*	58 500 *260*	0.64 *0,29*	**GEZM 104 ESX-2LS**
1.375 *34,925*	2.1875 *55,563*	2.062 *52,375*	1.031 *26,187*	5	35 400 *156*	69 750 *310*	0.82 *0,37*	**GEZM 106 ESX-2LS**
1.5 *38,1*	2.4375 *61,913*	2.250 *57,15*	1.125 *28,575*	5	41 500 *186*	84 380 *375*	1.12 *0,51*	**GEZM 108 ESX-2LS**
1.75 *44,45*	2.8125 *71,438*	2.625 *66,675*	1.312 *33,325*	5	57 000 *255*	114 750 *510*	1.79 *0,81*	**GEZM 112 ESX-2LS**
2 *50,8*	3.1875 *80,963*	3.000 *76,2*	1.500 *38,1*	5	75 000 *335*	150 750 *670*	2.65 *1,20*	**GEZM 200 ESX-2LS**
2.25 *57,15*	3.5625 *90,488*	3.375 *85,725*	1.687 *42,85*	5	95 000 *425*	191 250 *850*	3.65 *1,65*	**GEZM 204 ESX-2LS**
2.5 *63,5*	3.9375 *100,013*	3.750 *95,25*	1.875 *47,625*	5	116 000 *520*	234 000 *1 040*	4.95 *2,25*	**GEZM 208 ESX-2LS**
2.75 *69,85*	4.3750 *111,125*	4.125 *104,775*	2.062 *52,375*	5	140 000 *630*	285 750 *1 270*	6.85 *3,10*	**GEZM 212 ESX-2LS**
3 *76,2*	4.7500 *120,65*	4.500 *114,3*	2.250 *57,15*	5	170 000 *750*	337 500 *1 500*	8.80 *4,00*	**GEZM 300 ESX-2LS**
3.25 *82,55*	5.1250 *130,175*	4.875 *123,825*	2.437 *61,9*	5	196 000 *880*	396 000 *1 760*	11.0 *5,00*	**GEZM 304 ESX-2LS**
3.5 *88,9*	5.5000 *139,7*	5.250 *133,35*	2.625 *66,675*	5	228 000 *1 020*	459 000 *2 040*	14.0 *6,25*	**GEZM 308 ESX-2LS**
3.75 *95,25*	5.8750 *149,225*	5.625 *142,875*	2.812 *71,425*	5	265 000 *1 180*	531 000 *2 360*	17.0 *7,60*	**GEZM 312 ESX-2LS**
4 *101,6*	6.2500 *158,75*	6.000 *152,4*	3.000 *76,2*	5	305 000 *1 340*	596 250 *2 650*	20.0 *9,10*	**GEZM 400 ESX-2LS**

[1] To fully utilize the angle of tilt, the shaft shoulder should not be made larger than $d_{a\ max}$

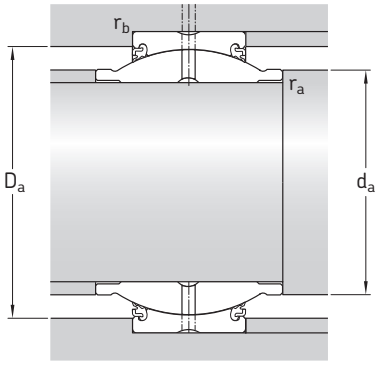

Dimensions								Abutment and fillet dimensions					
d	d_k	d_1	b	b_1	M	r_1[1] min.	r_2[2] min.	d_a min.	d_a max.	D_a min.	D_a max.	r_a max.	r_b max.
in./*mm*								in./*mm*					
1 *25,4*	1.4370 *36,5*	1.220 *30,988*	0.126 *3,2*	0.118 *3*	0.098 *2,5*	0.024 *0,6*	0.039 *1*	1.11 *28,2*	1.22 *31*	1.39 *35,2*	1.48 *37,7*	0.024 *0,6*	0.039 *1*
1.25 *31,75*	1.7950 *45,593*	1.525 *38,735*	0.189 *4,8*	0.197 *5*	0.157 *4*	0.039 *1*	0.039 *1*	1.41 *35,8*	1.52 *38,7*	1.76 *44,8*	1.85 *47*	0.039 *1*	0.039 *1*
1.375 *34,925*	1.9370 *49,2*	1.670 *42,418*	0.189 *4,8*	0.197 *5*	0.157 *4*	0.039 *1*	0.039 *1*	1.54 *39,1*	1.67 *42,4*	1.85 *47,1*	2.04 *51,7*	0.039 *1*	0.039 *1*
1.5 *38,1*	2.1550 *54,737*	1.850 *46,99*	0.189 *4,8*	0.197 *5*	0.157 *4*	0.039 *1*	0.039 *1*	1.70 *43,3*	1.85 *47*	2.06 *52,3*	2.28 *58*	0.039 *1*	0.039 *1*
1.75 *44,45*	2.5150 *63,881*	2.165 *54,991*	0.189 *4,8*	0.197 *5*	0.157 *4*	0.039 *1*	0.039 *1*	1.96 *49,9*	2.17 *55*	2.41 *61,3*	2.65 *67,4*	0.039 *1*	0.039 *1*
2 *50,8*	2.8750 *73,025*	2,460 *62,484*	0.189 *4,8*	0.197 *5*	0.157 *4*	0.039 *1*	0.039 *1*	2.22 *56,5*	2.46 *62,5*	2.85 *72,4*	2.99 *75,9*	0.039 *1*	0.039 *1*
2.25 *57,15*	3.2350 *82,169*	2.760 *70,104*	0.224 *5,7*	0.197 *5*	0.157 *4*	0.039 *1*	0.039 *1*	2.48 *63,1*	2.76 *70,1*	3.11 *79*	3.36 *85,3*	0.039 *1*	0.039 *1*
2.5 *63,5*	3.5900 *91,186*	3.060 *77,724*	0.354 *9*	0.315 *8*	0.256 *6,5*	0.039 *1*	0.039 *1*	2.74 *69,6*	3.06 *77,7*	3.43 *87*	3.73 *94,7*	0.039 *1*	0.039 *1*
2.75 *69,85*	3.9500 *100,33*	3.380 *85,852*	0.354 *9*	0.315 *8*	0.256 *6,5*	0.039 *1*	0.039 *1*	3.00 *76,2*	3.38 *85,9*	3.78 *96*	4.16 *105,7*	0.039 *1*	0.039 *1*
3 *76,2*	4.3120 *109,525*	3.675 *93,345*	0.354 *9*	0.315 *8*	0.256 *6,5*	0.039 *1*	0.039 *1*	3.26 *82,8*	3.67 *93,3*	4.13 *104,8*	4.53 *115*	0.039 *1*	0.039 *1*
3.25 *82,55*	4.6750 *118,745*	3.985 *101,219*	0.366 *9,3*	0.315 *8*	0.256 *6,5*	0.039 *1*	0.039 *1*	3.52 *89,4*	3.98 *101,2*	4.50 *114,2*	4.90 *124,4*	0.039 *1*	0.039 *1*
3.5 *88,9*	5.0400 *128,016*	4.300 *109,22*	0.413 *10,5*	0.315 *8*	0.256 *6,5*	0.039 *1*	0.039 *1*	3.78 *95,9*	4.30 *109,2*	4.83 *122,8*	5.27 *133,8*	0.039 *1*	0.039 *1*
3.75 *95,25*	5.3900 *136,906*	4.590 *116,586*	0.413 *10,5*	0.315 *8*	0.256 *6,5*	0.039 *1*	0.039 *1*	4.04 *102,5*	4.59 *116,6*	5.17 *131,4*	5.63 *143,1*	0.039 *1*	0.039 *1*
4 *101,6*	5.7500 *146,05*	4.905 *124,587*	0.413 *10,5*	0.394 *10*	0.315 *8*	0.059 *1,5*	0.039 *1*	4.33 *110*	4.91 *124,6*	5.49 *139,5*	6.00 *152,5*	0.059 *1,5*	0.039 *1*

[1] Equal to maximum shaft fillet radius $r_{a\,max}$
[2] Equal to maximum housing fillet radius $r_{b\,max}$

SKF Explorer steel/steel plain bearings

Radial spherical plain bearings with an extended inner ring, inch sizes

d **1** – **6** in.

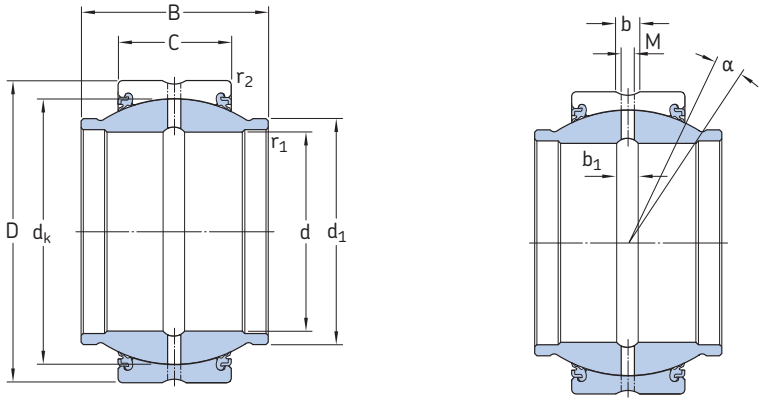

GEZM .. ESX-2LS

Principal dimensions				Angle of tilt	Basic load ratings dynamic	static	Mass	Designation
d	D	B	C	α	C	C_0		
in./*mm*				°	lbf/*kN*		lb/*kg*	–
4.5 *114,3*	7.0000 *177,8*	6.750 *171,45*	3.375 *85,725*	5	375 000 *1 700*	765 000 *3 400*	28.5 *13,0*	**GEZM 408 ESX-2LS**
5 *127*	7.7500 *196,85*	7.500 *190,5*	3.750 *95,25*	5	465 000 *2 080*	933 750 *4 150*	38.5 *17,5*	**GEZM 500 ESX-2LS**
6 *152,4*	8.7500 *222,25*	8.250 *209,55*	4.125 *104,775*	5	585 000 *2 600*	1 170 000 *5 200*	47.5 *21,5*	**GEZM 600 ESX-2LS**

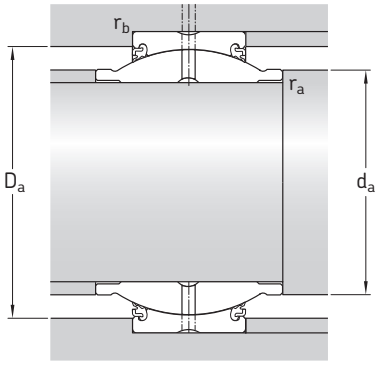

Dimensions								**Abutment and fillet dimensions**					
d	d_k	d_1	b	b_1	M	r_1[1] min.	r_2[2] min.	d_a min.	d_a max.	D_a min.	D_a max.	r_a max.	r_b max.
in./*mm*								in./*mm*					
4.5 *114,3*	6.4750 *164,465*	5.525 *140,335*	0.433 *11*	0.394 *10*	0.315 *8*	0.079 *2*	0.043 *1,1*	4.94 *125,5*	5.52 *140,3*	6.18 *157*	6.73 *171*	0.079 *2*	0.043 *1,1*
5 *127*	7.1900 *182,626*	6.130 *155,702*	0.433 *11*	0.394 *10*	0.315 *8*	0.079 *2*	0.043 *1,1*	5.45 *138,5*	6.13 *155,7*	6.91 *175,5*	7.42 *188,5*	0.079 *2*	0.043 *1,1*
6 *152,4*	8.1560 *207,162*	7.020 *178,308*	0.591 *15*	0.433 *11*	0.315 *8*	0.079 *2*	0.043 *1,1*	6.46 *164*	7.02 *178,3*	7.78 *197,5*	8.41 *213,5*	0.079 *2*	0.043 *1,1*

[1] Equal to maximum shaft fillet radius $r_{a\,max}$
[2] Equal to maximum housing fillet radius $r_{b\,max}$

SKF Explorer steel/steel plain bearings

Rod ends with a female thread

d **20** – **80** mm

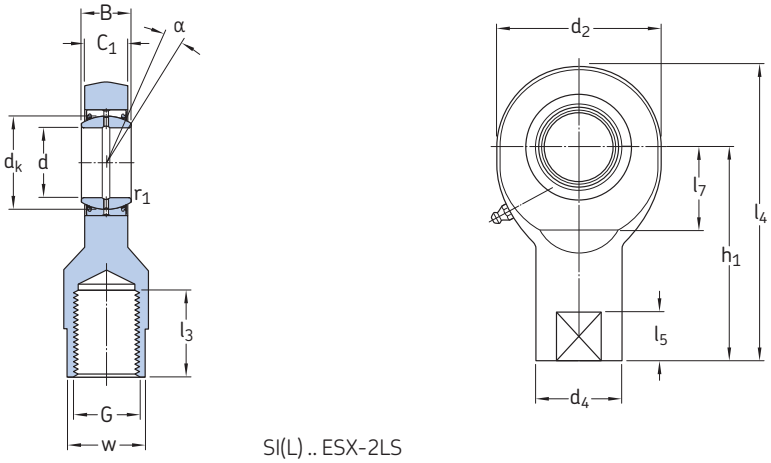

SI(L) .. ESX-2LS

Principal dimensions						Angle of tilt	Basic load ratings dynamic	static	Mass	Designations Rod end with right-hand thread	left-hand thread
d	d_2 max	G 6H	B	C_1 max	h_1	α	C	C_0			
mm						°	kN		kg	–	–
20	54	M 20×1,5	16	13,5	77	9	44	57	0,36	**SI 20 ESX-2LS**	**SIL 20 ESX-2LS**
25	65	M 24×2	20	18	94	7	72	90	0,65	**SI 25 ESX-2LS**	**SIL 25 ESX-2LS**
30	75	M 30×2	22	20	110	6	93	116	1,00	**SI 30 ESX-2LS**	**SIL 30 ESX-2LS**
35	84	M 36×3	25	22	130	6	120	134	1,40	**SI 35 ESX-2LS**	**SIL 35 ESX-2LS**
40	94	M 39×3	28	24	142	6	150	166	2,20	**SIA 40 ESX-2LS**	**SILA 40 ESX-2LS**
	94	M 42×3	28	24	145	6	150	166	2,30	**SI 40 ESX-2LS**	**SIL 40 ESX-2LS**
45	104	M 42×3	32	28	145	7	190	224	2,90	**SIA 45 ESX-2LS**	**SILA 45 ESX-2LS**
	104	M 45×3	32	28	165	7	190	224	3,20	**SI 45 ESX-2LS**	**SIL 45 ESX-2LS**
50	114	M 45×3	35	31	160	6	236	270	4,10	**SIA 50 ESX-2LS**	**SILA 50 ESX-2LS**
	114	M 52×3	35	31	195	6	236	270	4,50	**SI 50 ESX-2LS**	**SIL 50 ESX-2LS**
60	137	M 52×3	44	39	175	6	365	400	6,30	**SIA 60 ESX-2LS**	**SILA 60 ESX-2LS**
	137	M 60×4	44	39	225	6	365	400	7,10	**SI 60 ESX-2LS**	**SIL 60 ESX-2LS**
70	162	M 56×4	49	43	200	6	465	530	9,50	**SIA 70 ESX-2LS**	**SILA 70 ESX-2LS**
	162	M 72×4	49	43	265	6	465	530	10,5	**SI 70 ESX-2LS**	**SIL 70 ESX-2LS**
80	182	M 64×4	55	48	230	5	600	655	15,0	**SIA 80 ESX-2LS**	**SILA 80 ESX-2LS**
	182	M 80×4	55	48	295	5	600	655	19,0	**SI 80 ESX-2LS**	**SIL 80 ESX-2LS**

Dimensions

d	d_k	d_4 ~	l_3 min.	l_4 max.	l_5 ~	l_7 min.	r_1 min.	w h14
mm								
20	29	28	30	106	16	24	0,3	24
25	35,5	35	36	128	18	30	0,6	30
30	40,7	42	45	149	19	34	0,6	36
35	47	49	60	174	25	36	0,6	41
40	53 53	58 58	65 65	191 194	25 25	40 40	0,6 0,6	50 50
45	60 60	65 65	65 65	199 219	30 30	48 48	0,6 0,6	55 55
50	66 66	70 70	68 68	219 254	30 30	58 58	0,6 0,6	60 60
60	80 80	82 82	70 70	246 296	35 35	68 68	1 1	70 70
70	92 92	92 92	80 80	284 349	40 40	78 78	1 1	80 80
80	105 105	105 105	85 85	324 389	45 45	88 88	1 1	90 90

SKF Explorer steel/steel plain bearings

Rod ends with a male thread

d **20** – **80** mm

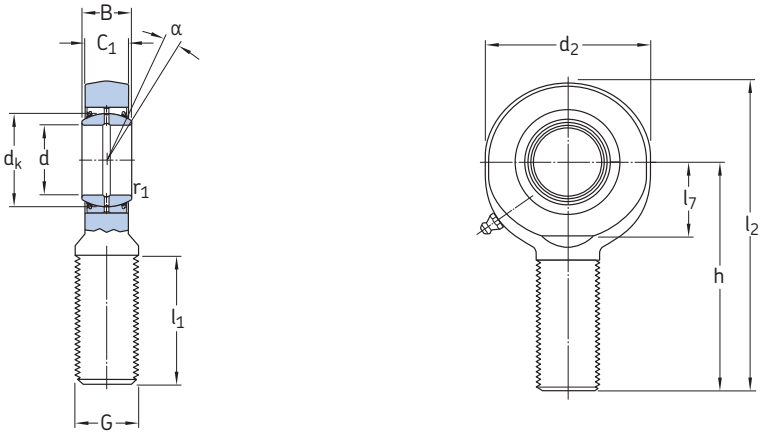

SA(L) .. ESX-2LS

Principal dimensions						Angle of tilt	Basic load ratings dynamic	static	Mass	Designations Rod end with right-hand thread	left-hand thread
d	d_2 max	G 6g	B	C_1 max	h	α	$C^{1)}$	C_0			
mm						°	kN		kg	–	–
20	54	M 20×1,5	16	13,5	78	9	44	42,5	0,32	**SA 20 ESX-2LS**	**SAL 20 ESX-2LS**
25	65	M 24×2	20	18	94	7	72	78	0,53	**SA 25 ESX-2LS**	**SAL 25 ESX-2LS**
30	75	M 30×2	22	20	110	6	93	81,5	0,90	**SA 30 ESX-2LS**	**SAL 30 ESX-2LS**
35	84	M 36×3	25	22	130	6	120	110	1,30	**SA 35 ESX-2LS**	**SAL 35 ESX-2LS**
40	94	M 39×3	28	24	150	6	150	140	1,85	**SAA 40 ESX-2LS**	**SALA 40 ESX-2LS**
	94	M 42×3	28	24	145	6	150	140	1,90	**SA 40 ESX-2LS**	**SAL 40 ESX-2LS**
45	104	M 42×3	32	28	163	7	190	200	2,45	**SAA 45 ESX-2LS**	**SALA 45 ESX-2LS**
	104	M 45×3	32	28	165	7	190	200	2,55	**SA 45 ESX-2LS**	**SAL 45 ESX-2LS**
50	114	M 45×3	35	31	185	6	236	245	3,30	**SAA 50 ESX-2LS**	**SALA 50 ESX-2LS**
	114	M 52×3	35	31	195	6	236	245	3,90	**SA 50 ESX-2LS**	**SAL 50 ESX-2LS**
60	137	M 52×3	44	39	210	6	365	360	5,70	**SAA 60 ESX-2LS**	**SALA 60 ESX-2LS**
	137	M 60×4	44	39	225	6	365	360	6,25	**SA 60 ESX-2LS**	**SAL 60 ESX-2LS**
70	162	M 56×4	49	43	235	6	465	490	7,90	**SAA 70 ESX-2LS**	**SALA 70 ESX-2LS**
	162	M 72×4	49	43	265	6	465	490	10,00	**SA 70 ESX-2LS**	**SAL 70 ESX-2LS**
80	182	M 64×4	55	48	270	5	600	585	12,00	**SAA 80 ESX-2LS**	**SALA 80 ESX-2LS**
	182	M 80×4	55	48	295	5	600	585	14,50	**SA 80 ESX-2LS**	**SAL 80 ESX-2LS**

[1] Dynamic load rating of the bearing to be used for basic rating life calculation only.
Check suitability of the rod end against its static load rating in all cases.
The dynamic load applied on the rod end must not exceed its static load rating.

Dimensions

d	d_k	l_1 min.	l_2 max.	l_7 min.	r_1 min.
mm					
20	29	43	107	24	0,3
25	35,5	53	128	30	0,6
30	40,7	60	149	34	0,6
35	47	68	174	40	0,6
40	53	86	199	46	0,6
	53	76	194	46	0,6
45	60	92	217	50	0,6
	60	95	219	50	0,6
50	66	104	244	58	0,6
	66	110	254	58	0,6
60	80	115	281	73	1
	80	120	296	73	1
70	92	125	319	85	1
	92	132	349	85	1
80	105	140	364	98	1
	105	147	389	98	1

The Power of Knowledge Engineering

Combining products, people, and application-specific knowledge, SKF delivers innovative solutions to equipment manufacturers and production facilities in every major industry worldwide. Having expertise in multiple competence areas supports SKF Life Cycle Management, a proven approach to improving equipment reliability, optimizing operational and energy efficiency and reducing total cost of ownership.

These competence areas include bearings and units, seals, lubrication systems, mechatronics, and a wide range of services, from 3-D computer modelling to cloud-based condition monitoring and asset management services.

SKF's global footprint provides SKF customers with uniform quality standards and worldwide product availability. Our local presence provides direct access to the experience, knowledge and ingenuity of SKF people.



SKF BeyondZero

SKF BeyondZero is more than our climate strategy for a sustainable environment: it is our mantra; a way of thinking, innovating and acting.

For us, SKF BeyondZero means that we will reduce the negative environmental impact from our own operations and at the same time, increase the positive environmental contribution by offering our customers the SKF BeyondZero portfolio of products and services with enhanced environmental performance characteristics.

For inclusion in the SKF BeyondZero portfolio, a product, service or solution must deliver significant environmental benefits without serious environmental trade-offs.

skf.com | skf.com/spb

® SKF, SKF Explorer and BeyondZero are registered trademarks of the SKF Group.

™ SKF EnCompass is a trademark of the SKF Group.

© SKF Group 2015
The contents of this publication are the copyright of the publisher and may not be reproduced (even extracts) unless prior written permission is granted. Every care has been taken to ensure the accuracy of the information contained in this publication but no liability can be accepted for any loss or damage whether direct, indirect or consequential arising out of the use of the information contained herein.

PUB BU/S9 15521 EN · June 2015

Certain image(s) used under license from Shutterstock.com