Ball transfer units



Publication 940-711

Contents

Design & construction	page 1
Technical information	page 2
Flange fixing units	page 4
Bolt fixing units	page 6
Base fixing units	page 8
Tube fixing & clamp fixing units	page 11
Glide units & fixing sockets	page 12
Euro units	page 14
Hi-tech units	page 16
Hevi-Load units	page 20
Die lifters	page 23
Tuff series heavy duty units	page 24
Heavy duty units, series 800	page 26
Spring loaded units	page 28
Miniature ball transfer units	page 30
Miscellaneous units	page 31
Fixing clips	page 32
Tee blocks & die tables	page 34
Ball stands & hanger bolts	page 35

Design and construction

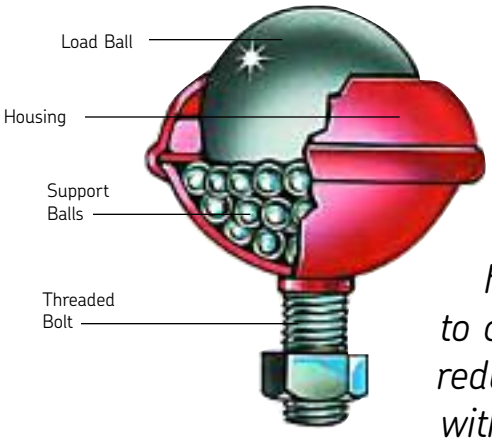

SKF® ball units are a multi-directional, material handling system, manufactured from high quality materials in Birmingham England.

They consist of a large load-bearing ball which sits upon many small balls encapsulated in a hemi-spherical cup. The housing can contain a seal to clean the load ball as it rotates. The design greatly reduces friction and allows heavy loads to be moved with a minimum of effort.

Our ball units may be used at any orientation but deviation from the vertical may result in a reduction in the stated load ratings quoted in this catalog.

SKF continually improves the product range with new innovative and creative ideas using the latest CNC machinery and production/inspection methods.

Our specially designed ball unit test machine, regularly used to test production units, together with many years of research and experience, provides world-class performance.

There are many possible applications for SKF ball transfer units where loads need to be moved smoothly, precisely and with minimum effort in any direction.

Some typical applications include cargo and baggage handling, assembly lines, as a castor, machine loading, sliding-door systems, machine tables, etc.

SKF will recommend and supply ball units, and also design and manufacture complete assemblies ready for customers to use.

Technical information

Fixing methods

There are various methods of fixing SKF ball units. A wide range of fittings enables them to be used with various materials.

Fixing clips are available for most designs - See pages 32 & 33.

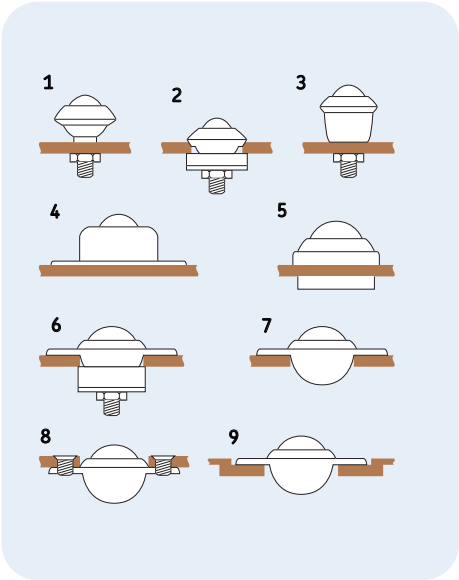

Materials

SKF ball units are available in various materials. The material required for your ball units should be quoted when ordering (see table below).

Lubrication

Each unit is pre-lubricated during manufacture and normally does not require further attention. In certain instances we will advise on lubrication. Greasing or oil points can be incorporated in some units.

Cleaning

A suitable cleaning or release fluid should be used in dirty conditions. For washing, a suitable detergent such as paraffin; for freeing, a suitable agent such as WD40 - please consult technical support.

Most designs have dirt exit holes incorporated in the bearing cup, or these can be added on request.

Shock loads

When calculating loads, consider the possibility of impact caused by incorrect levels. Spring loaded units will reduce wear and tear if there are regular shock impacts. Shock loading can also be reduced by fitting compressible pads.

Ball units can also be made retractable by other means, such as pneumatic or hydraulic cylinders, cams or levers. They can be programmed to operate in sequence.

Self levelling

Can be achieved by fitting rubber pads. This reduces excessive loads on just a few units. Details on request.

Temperature range

Min. -22º F to max. +128º F continuous, or +212º F intermittent. Special seals may need to be fitted to suit extreme conditions. In clean conditions and without seals +308º F to +362º F are possible, using type 15 units at reduced loads.

Conveying speed

Maximum recommended conveying speed is 3.28 feet.

Seals

These help resist ingress of dirt and fine particulate matter. They can be omitted on request.

type	*load ball*	*support balls*	*housing*
13	Carbon steel 60-66RC	Carbon steel 60-66RC	Ferrous steel bright zinc plated
14	Nylon 66	Carbon chrome 60-66	Ferrous steel bright zinc plated
15	Stainless steel AISI 420 52-58RC	Stainless steel AISI 420 52-58RC	Stainless steel AISI 304 self color
16	Stainless steel AISI 420 52-58RC	Stainless steel AISI 420 52-58RC	Ferrous steel bright zinc plated

* see key to dimensions, page 3
** see key to maximum loading, page 3
general tolerances unless stated ± 0.3mm

Ball tables

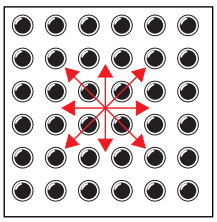

Square pitch

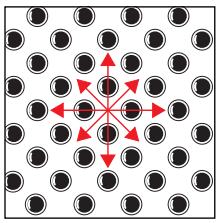

Diamond pitch

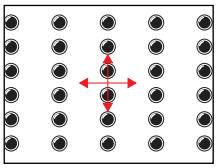

Elongated pitch

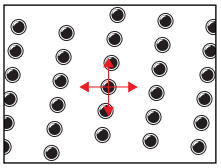

Elongated diagonal pitch

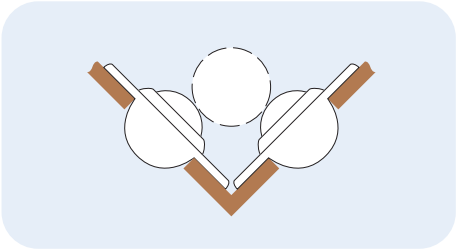

Vee location

Quantity calculation

The weight of the article to be conveyed should be divided by 3. The result will give the maximum load any single ball will bear.

On any accurately leveled or flexible surface, a number greater than 3 may be used. The surface hardness and condition of the article should be considered to avoid ball unit penetration.

Spacing

The pitch is calculated by dividing the narrowest dimension by 3.5, i.e. if the narrowest dimension is 350mm divided by 3.5 = 100mm pitch between ball centers. This ensures 3 ball units are always beneath the narrowest dimension of the load at any one time.

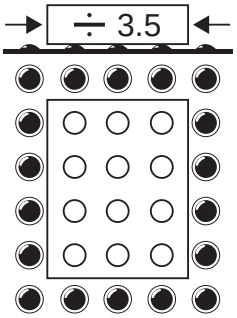

Ordering procedure

We can help you select not only the most suitable ball unit for your application, we can advise you on every aspect of layout, design, manufacture and maintenance of your installation.

We recommend you take advantage of this service.

To order

1) It is generally only necessary to precede the product reference number (i.e. 1009, 1019 or 530-0) and the material type (i.e. type 13, 14,15 or 16), with a "BT" for ball transfer.
2) There are instances however, where more information is required.
   a) Where applicable the length of thread (dimension N) and the spring washer diameter (dimension W), see pages 6-7 & 10-11, also need to be indicated, e.g. 3001-13-25 and 3004-13-16.9.
   b) Also, if applicable, quote the special specification code. For example,
      NO (no oil)
      NS (no seal)
      NB (nylon ball)
      PB (phenolic load ball)
      DE (dirt exit hole)
      SI (solid steel inner ring).

Key to dimensions

A	Maximum diameter
B	Working height of ball
C	Ball exposure above outer ring
C_1	IS unit shoulder height
D	Body diameter
E	Distance under flange to base
F	Flange, base or knurl thickness
G	P.C.D.or centers of fixing holes
H	Diameter of fixing holes / slot width
H_1	Diameter of countersunk
H_2	Hole diameter and fixing holes
I	Hole centers-width
J	Base plate-length (major flange size)
K	Base plate-width (minor flange size)
L	Overall height
M	Under flange to top of outer ring
N	Length of thread or pin
O	Seating or fixing hole diameter
O_1	M10 nut clearance diameter
P	Thread size or pin diameter
R	Body depth or radius under flange
S	Base of top of body
T	Table top thickness
W	Collar or spring washer diameter
X	Dimension across flats
Y	Minimum hole depth
Z	Nut clearance diameter

Key to maximum loading

Type 13	Carbon steel bearings, zinc plated housings
Type 14	Nylon load bearings, zinc plated housings
Type 15	Stainless steel bearings and housings
Type 16	Stainless steel bearings, zinc plated housings

Flange fixing units

3016 – 4001

Features:

General purpose.
Low profile, dirt exit hole.
No seals in 3016 and 3025 units.

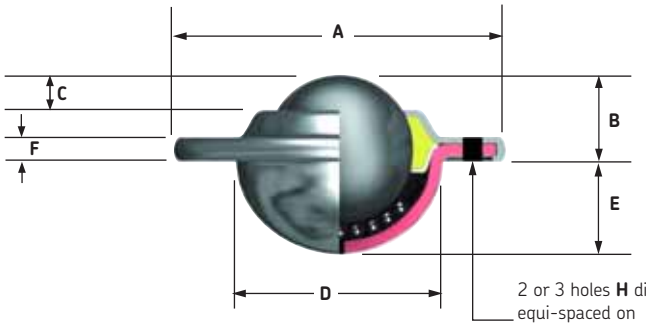



Ball unit REF. No's 1022 and 1035 with solid steel inner ring (SI) option illustrated with no seal for improved protection from shock loading.

ref no.	fixing holes	ball size (mm)	weight (g)	dimensions (mm)*									maximum loading (lb)**							
				A	B	C	D	E	F	G	H	O	type 13 ball up	type 14 ball down	type 15 ball up	type 16 ball down	ball up	ball down	ball up	ball down
3016	2	15.8	45	41.3	10.2	4	22.2 ±0.2	8.3	3.2	30 ±0.2	3.5	23	26	13	17	8	26	13	26	13
3000	2	19	87	61	10	3.2	29.1 ±0.2	12	3.2	44.5 ±0.2	5.1	30	55	22	44	22	55	22	55	22
3006	3	19	87	61	10	3.2	29.1 ±0.2	12	3.2	44.5 ±0.2	5.1	30	55	22	44	22	55	22	55	22
3025	2	25.4	135	56	14.6	7.3	34.7 ±0.2	14.6	4	45.5 ±0.2	4.5	35.5	121	55	55	22	121	55	121	55
1000	2	25.4	175	73	14.2	6.3	37.2 ±0.2	15.8	3.5	55.6 ±0.2	5.1	38.1	121	55	55	22	121	55	121	55
1008	3	25.4	175	73	14.2	6.3	37.2 ±0.2	15.8	3.5	55.6 ±0.2	5.1	38.1	121	55	55	22	121	55	121	55
1022	3	31.7	265	73.7	16.2	8	45.5 ±0.2	19.9	4.2	58.7 ±0.2	5.1	46.5	275	121	55	22	275	121	275	121
1035	2	31.7	265	73.7	16.2	8	45.5 ±0.2	19.9	4.2	58.7 ±0.2	5.1	46.5	275	121	55	22	275	121	275	121
2000	2	39.7	515	89	21.4	8.7	55.6 ±0.2	24.6	6	70 ±0.2	7	56.5	308	132	N/A	N/A	308	132	308	132
2011	3	39.7	515	89	21.4	8.7	55.6 ±0.2	24.6	6	70 ±0.2	7	56.5	308	132	N/A	N/A	308	132	308	132
4001	3	50.8	1065	120.7	28.3	14.3	75.3 ±0.2	30.2	6.3	92 ±0.2	8	76.5	749	220	N/A	N/A	551	220	749	220

* see key to dimensions, page 3
** see key to maximum loading, page 3
general tolerances unless stated ± 0.3mm

1502

Features:

Low profile, high-load capacity. Knife edge seal on load ball. Dirt exit hole. Requires 5 mm radius on fixing hole. See "R".

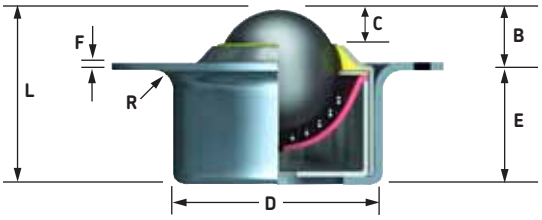

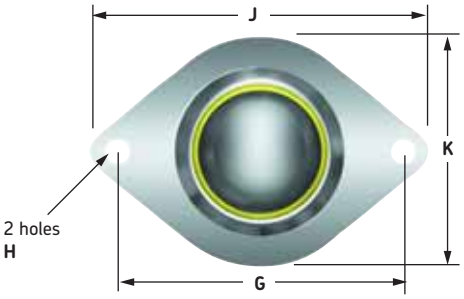

ref no.	fixing holes	ball size (mm)	weight (g)	dimensions (mm)*											maximum loading (lb)**							
				B	C	D	E	F	G	H	J	K	L	R	type 13 ball up	type 13 ball down	type 14 ball up	type 14 ball down	type 15 ball up	type 15 ball down	type 16 ball up	type 16 ball down
1502	2	25.4	196	12	6	42 ±0.2	24.5	1.7	58.7 ±0.2	5.1	68.1	50	36.5	5	220	110	55	22	220	110	220	110

1010 / 1030

Features:

Press ball unit into hole to fix, pry out to remove. Units can either be fixed or replaced quickly. Low profile, dirt exit hole.

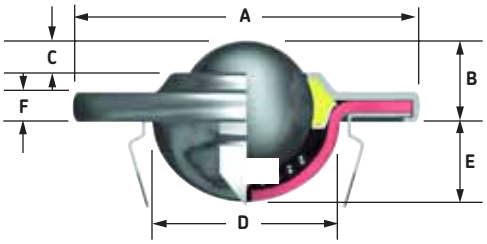

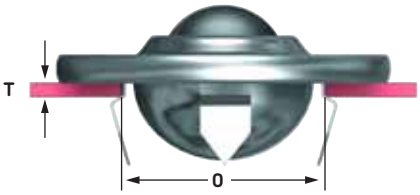

ref no.	fixing holes	ball size (mm)	weight (g)	dimensions (mm)*										maximum loading (lb)**							
				A	B	C	D	E	F	G	H	O	T	type 13 ball up	type 13 ball down	type 14 ball up	type 14 ball down	type 15 ball up	type 15 ball down	type 16 Ball up	type 16 ball down
1010	–	25.4	195	73	15.4	6.3	36.8 ±0.2	15	4.8	N/A	N/A	50	5	121	55	55	22	121	55	121	55
1030	–	31.7	275	73.7	17	8	44.6	19.5	5	N/A	N/A	50	5	275	121	55	22	275	121	275	121

2002 Xtra-Tuf

Features:

Heavy duty construction, designed for arduous and dirty conditions. Flushing hole for cleaning, extra large dirt exit hole.

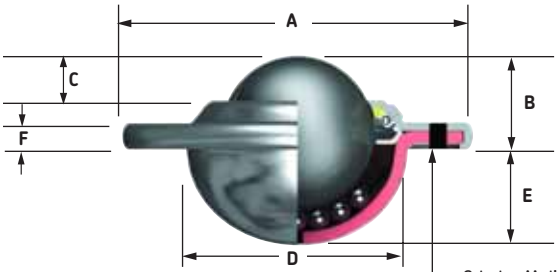

3 holes **H** dia equi-spaced on **G** P.C.D.

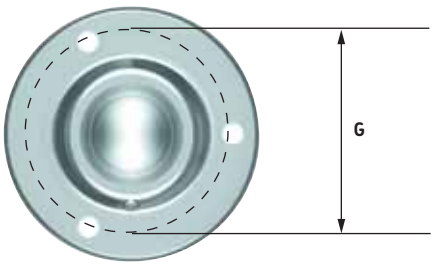

3 holes for heavy duty fixing

ref no.	fixing holes	ball size (mm)	weight (g)	dimensions (mm)*									maximum loading (lb)**							
				A	B	C	D	E	F	G	H	O	type 13 ball up	type 14 ball down	type 15 ball up	type 15 ball down	type 16 ball up	type 16 ball down	ball up	ball down
2002	3	39.7	635	94.6	21.2	6.9	62 ±0.2	27.3	6.3	76.2 ±0.2	7	63.3	496	220	N/A	N/A	496	220	496	220

* see key to dimensions, page 3
** see key to maximum loading, page 3
general tolerances unless stated ± 0.3mm

Bolt fixing units

3001

Features:
Adjustable height, drilled hole fixing. Optional extras: additional nuts, alternative thread sizes, dirt exit hole.

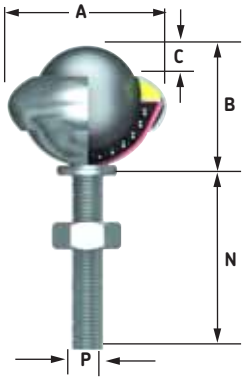

3002

Features:
Large support area, greater stability, drilled hole fixing. Optional extras: alternative thread sizes, dirt exit hole.

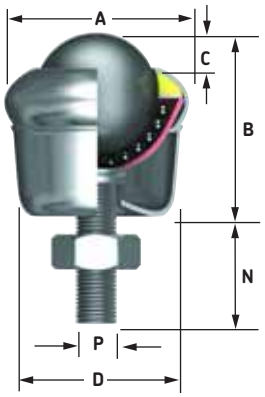

ref no.	ball size (mm)	max torque on nut (Nm)	weight (g)	dimensions (mm)*						maximum loading (lb)**							
				A	B	C	D	N	P	type 13 ball up	type 13 ball down	type 14 ball up	type 14 ball down	type 15 ball up	type 15 ball down	type 16 ball up	type 16 ball down
3001	19	15	60	32.1	24.6	4.7	_	25, 30, 35, 40, 50	M8	55	22	44	22	55	22	55	22
3002	19	15	80	32.1	30.2	4.7	25.4	20, 25, 30, 35, 45	M8	55	22	44	22	55	22	55	22

1003

Features:
Large support area, greater stability, drilled hole fixing. Optional extras: alternative thread sizes, dirt exit hole.

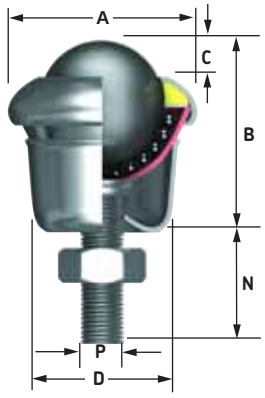

1009

Features:
Adjustable height, drilled hole fixing. Optional extras: additional nuts, alternative thread sizes, dirt exit hole.

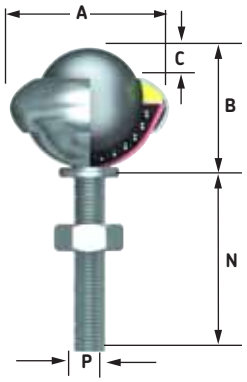

1501

Features:
Large support area, greater stability, drilled hole fixing. High load capacity, knife edge seal on main ball. Optional extras: alternative thread sizes, dirt exit hole.

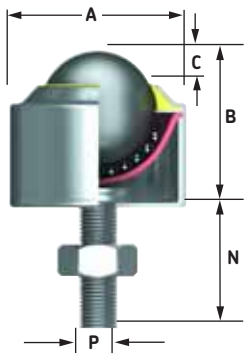

ref no.	ball size (mm)	ball torque on nut (Nm)	weight (g)	dimensions (mm)*						maximum loading (lb)**							
				A	B	C	D	N	P	type 13 ball up	type 13 ball down	type 14 ball up	type 14 ball down	type 15 ball up	type 15 ball down	type 16 ball up	type 16 ball down
1003	25.4	15	160	39.7	39.7	6.3	25.4	18, 23, 28, 33, 43	M8	121	55	55	22	121	55	121	55
1009	25.4	15	140	39.7	32.5	6.3	_	25, 30, 35, 40, 50	M8	121	55	55	22	121	55	121	55
1501	25.4	15	180	39.5	35.8	6.1	_	18, 23, 28	M8	110	110	55	11	110	110	110	110

* see key to dimensions, page 3
** see key to maximum loading, page 3
general tolerances unless stated ± 0.3mm

SKF

2001

Features:

Adjustable height, drilled hole fixing. Optional extras: additional nuts, alternative thread sizes, dirt exit hole.

2005

Features:

Large support area, greater stability, drilled hole fixing. Optional extras: alternative thread sizes, dirt exit hole.

4004

Features:

Adjustable height, drilled hole fixing. High load capacity, dirt exit hole. Can be dismantled for cleaning. Optional extras: grease points can be fitted. Alternative thread sizes.

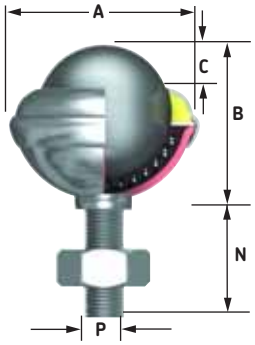

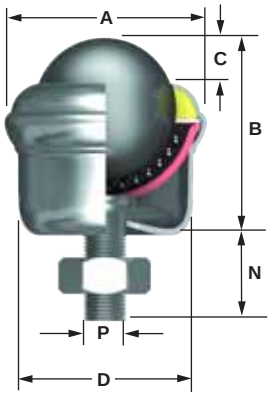

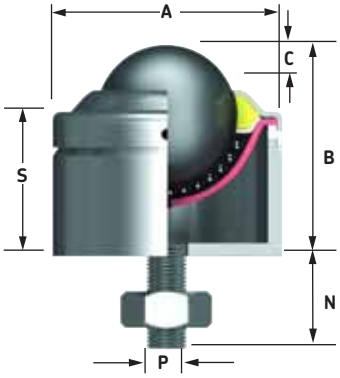

ref no.	ball size (mm)	max torque on nut (Nm)	weight (g)	dimensions (mm)*							maximum loading (lb)**							
				A	B	C	D	N	P	S	type 13 ball up	type 13 ball down	type 14 ball up	type 14 ball down	type 15 ball up	type 15 ball down	type 16 ball up	type 16 ball down
2001	39.7	20	400	55.5	47.62	11.9	_	25, 30, 40, 50	M10	_	308	132	N/A	N/A	308	132	308	132
2005	39.7	20	460	55.5	54.8	11.9	49	22, 32, 42	M10	_	308	132	N/A	N/A	308	132	308	132
4004	50.8	25	1720	89	76	22.2	_	75	M16 5/8" whit	53.8	749	220	N/A	N/A	551	220	749	220

* see key to dimensions, page 3
** see key to maximum loading, page 3
general tolerances unless stated ± 0.3mm

Base fixing units

3005

Features:
Heavy duty fixing. High profile. Drill hole fixing. Optional extras: dirt exit hole.

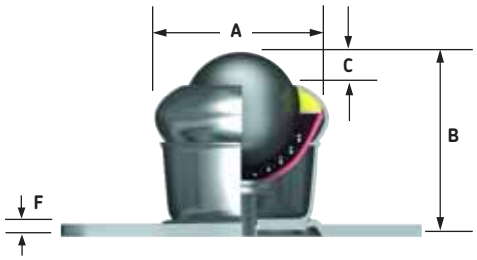

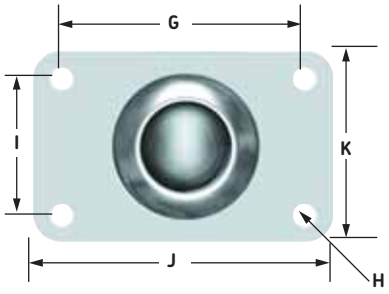

1005

Features:
Heavy duty fixing. High profile. Drill hole fixing. Optional extras: dirt exit hole.

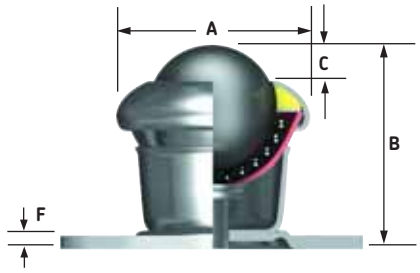

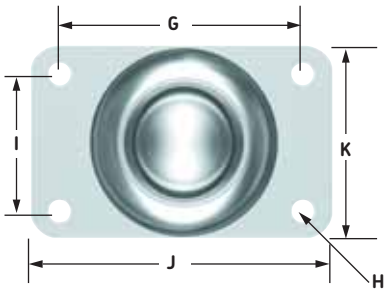

ref no.	ball size (mm)	fixing holes No. of holes	weight (g)	dimensions (mm)*										maximum loading (lb)**							
				A	B	C	F	G	H	I	J	K	S	type 13 ball up	type 13 ball down	type 14 ball up	type 14 ball down	type 15 ball up	type 15 ball down	type 16 ball up	type 16 ball down
3005	19	4	100	32.1	32.5	4.7	2.0	49.2 ±0.2	6.3	25.4 ±0.2	65	38	_	55	22	44	22	55	22	55	22
1005	25.4	4	160	39.7	41.3	6.3	2.0	49.2 ±0.2	6.3	25.4 ±0.2	65	38	_	121	55	55	22	121	55	121	55

* see key to dimensions, page 3
** see key to maximum loading, page 3
general tolerances unless stated ± 0.3mm

1020

Features:

Heavy duty fixing. High load capacity. High profile. Drill hole fixing. Optional extras: dirt exit hole.

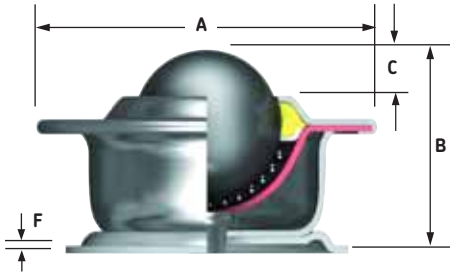

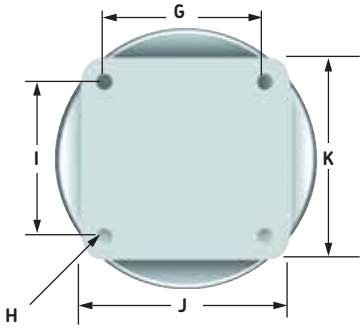

2003

Features:

Heavy duty fixing. High load capacity. High profile. Drill hole fixing. Optional extras: dirt exit hole.

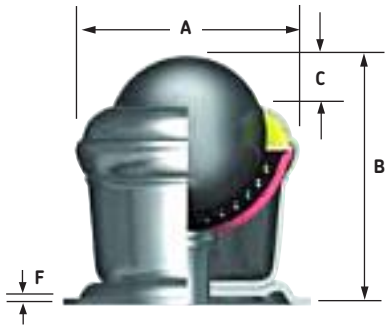

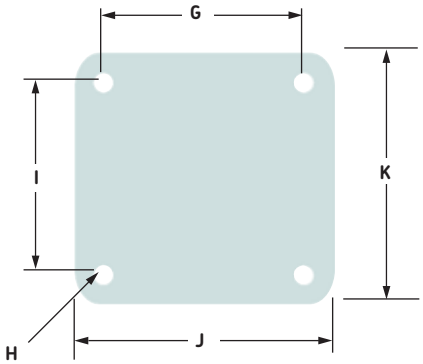

4002

Features:

Heavy duty fixing. High load capacity. High profile. Dirt exit hole standard. Drill hole fixing. Can be dismantled for cleaning. Optional extras: grease points can be fitted.

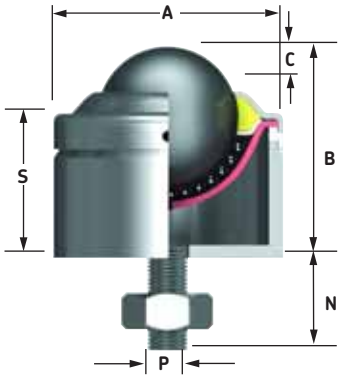

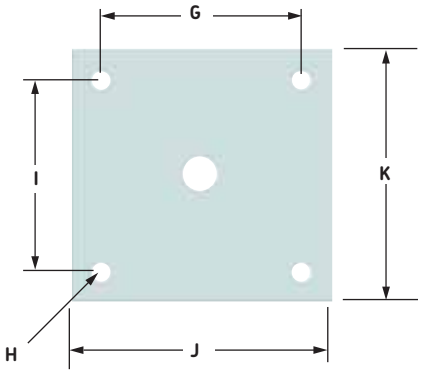

ref no.	ball size (mm)	fixing holes No. of holes	weight (g)	dimensions (mm)*										maximum loading (lb)**							
				A	B	C	F	G	H	I	J	K	S	type 13 ball up	type 13 ball down	type 14 ball up	type 14 ball down	type 15 ball up	type 15 ball down	type 16 ball up	type 16 ball down
1020	31.7	4	380	73	44.4	8	2.0	47.6 ±0.2	4.8	47.6 ±0.2	58.7	58.7	_	275	121	55	22	275	121	275	121
2003	39.7	4	480	55.5	57	11.9	2.0	47.6 ±0.2	4.8	47.6 ±0.2	58.7	58.7	_	308	132	N/A	N/A	308	132	308	132
4002	50.8	4	2100	89	76	14.3	6.3	89 ±0.2	13.5	89 ±0.2	127	127	54	749	220	N/A	N/A	551	220	749	220

* see key to dimensions, page 3
** see key to maximum loading, page 3
general tolerances unless stated ± 0.3mm

Base fixing units

1006

Features:

High load capacity. High profile. Dirt exit hole standard. Drill hole fixing. Ball unit 1050 is similar in design to the 1006 unit.

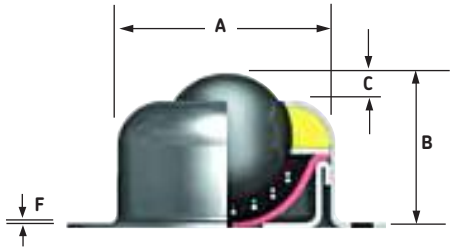

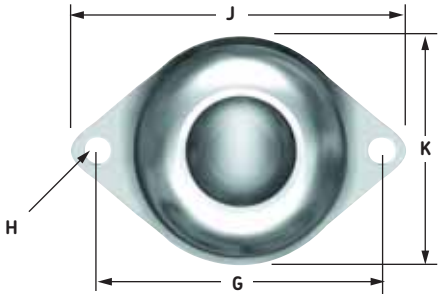

1503

Features:

High load capacity. High profile. Dirt exit hole standard. Drill hole fixing. Knife edge seal on main ball.

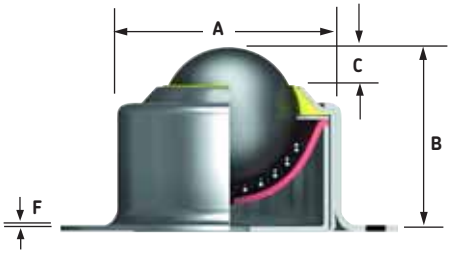

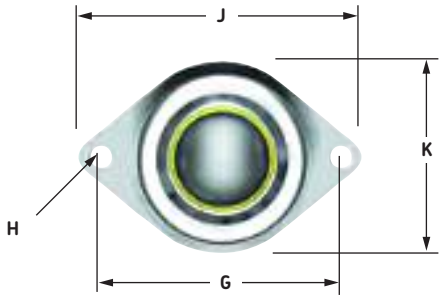

ref no.	ball size (mm)	fixing holes no. of holes	weight (g)	dimensions (mm)*										maximum loading (lb)**							
				A	B	C	F	G	H	I	J	K	S	type 13 ball up	type 13 ball down	type 14 ball up	type 14 ball down	type 15 ball up	type 15 ball down	type 16 ball up	type 16 ball down
1006	25.4	2	160	44.5	30.5	6.3	1.0	60.3 ±0.2	5.0	_	68.3	50.8	_	121	55	55	22	121	55	121	55
1050	25.4	2	145	42.0	31.0	7.5	1.0	56.0 ±0.2	5.5	_	69.0	51.0	_	66	22	44	22	66	22	66	22
1503	25.4	2	200	42.0	35.8	6.1	1.75	58.7 ±0.2	5.0	_	68.1	50	_	110	110	55	22	110	110	110	110

* see key to dimensions, page 3
** see key to maximum loading, page 3
general tolerances unless stated ± 0.3mm

3004 • 1002 tube fixing

Features:

Tube fixing is achieved by pushing the spring washer into a suitable size tube and turning to lock. 3 sizes available – see dimension "W". Suitable for use as a castor.

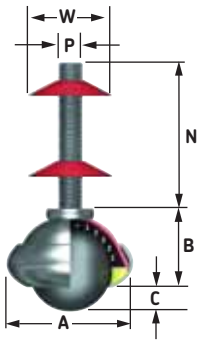

Note: The sectioned tube is not part of the ball unit.



2004 tube fixing

Features:

Tube fixing is achieved by pushing the bush into the tube. Rotating the unit expands the rubber bush for an interference fit. Excellent as a castor.

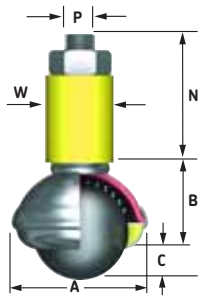

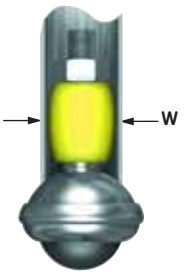

ref no.	ball size (mm)	weight (g)	dimensions (mm)*						maximum loading (lb)**							
			A	B	C	N	P	W	type 13 ball up	type 13 ball down	type 14 ball up	type 14 ball down	type 15 ball up	type 15 ball down	type 16 ball up	type 16 ball down
3004	19	60	32.1	24.6	4.7	40	M6	16.9, 20.2 ,23.5	55	22	44	22	55	22	55	22
1002	25.4	120	39.7	32.5	6.3	40	M6	16.9, 20.2, 23.5	121	55	55	22	121	55	121	55
2004	39.7	420	55.5	47.6	11.9	50	M10	grip range 25.4 to 32	308	132	N/A	N/A	308	132	308	132

3007 • 1001 • 1021 clamp fixing

Features:

The 3007 and 1001 can be fixed to 1mm-10mm thick materials.
1mm-27mm thick materials for the 1021.
The maximum tightening torque is 15Nm for the 3007 and 1001, 20Nm for the 1021. Optional extras: dirt exit hole.

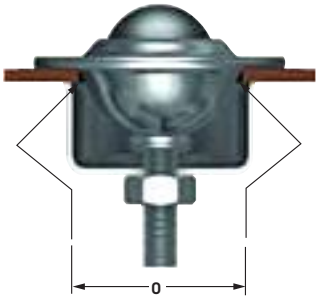

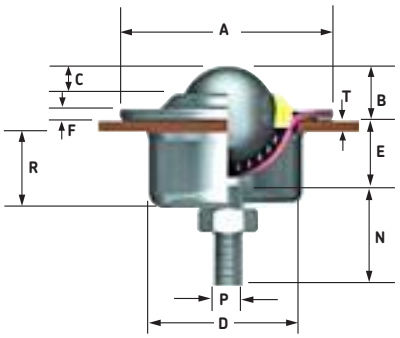

ref no.	ball size (mm)	weight (g)	dimensions (mm)*										maximum loading (lb)**							
			A	B	C	D	E	F	N	O	P	R	T	type 13 ball up	type 13 ball down	type 14 ball up	type 14 ball down	type 15 ball up	type 15 ball down	type 16 ball up	type 16 ball down
3007	19	160	61	10	3.2	49.7	14.5	3.2	50	30	M8	25	1-10	55	22	44	22	55	22	55	22
1001	25.4	260	73	14.2	6.3	49.7	18	3	50	38.1	M8	25	1-10	121	55	55	22	121	55	121	55
1021	31.7	360	73.7	16.2	8	49.7	22.3	4.2	50	46.5	M10	25	1-27	275	121	55	22	275	121	275	121

* see key to dimensions, page 3
** see key to maximum loading, page 3
general tolerances unless stated ± 0.3mm

Glide units and fixing sockets

This is a simple and inexpensive range of ball transfer units which have a large ball exposure. They are ideal for lighter duties and where there is a cost consideration.

All units are fitted with a seal which simply and effectively removes debris by an internal plastic scraper.

The direction of rotation slightly moves the ball against the seal providing a highly effective cleaning action.

For normal applications steel bearings with zinc-plated housings and components are recommended. However, when used as a castor or in wet conditions stainless steel (type 15) is recommended.

1700 plug fixing

Features:

Plain body, dirt exit hole standard.

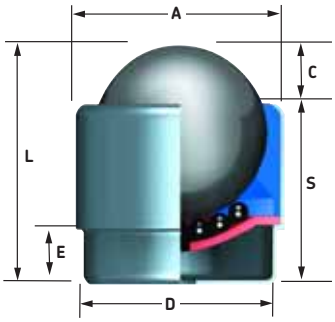

1701 bolt fixing

Features:

Drill hole nut and bolt fixing. Maximum tightening torque is 15Nm.

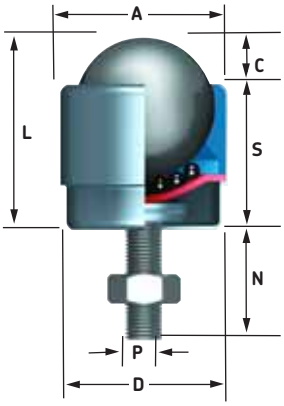

1702 flange fixing

Features:

Low profile flange fixing, dirt exit hole standard.

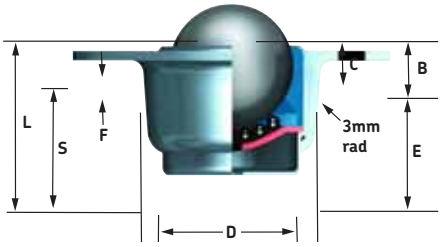



1703 plate fixing

Features:

High profile base plate fixing. Drill hole fixing. Dirt exit hole standard.

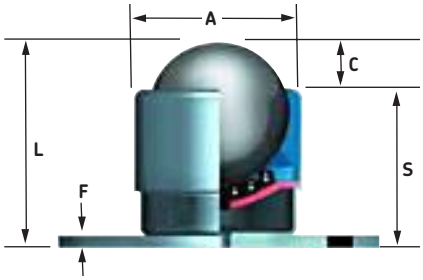

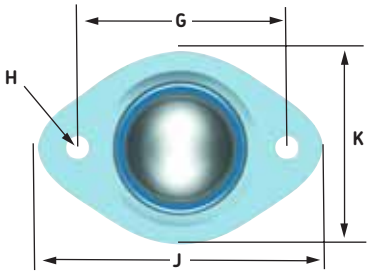

1704 pintle pin and circlip

Features:

Pintle pin and circlip fixing.

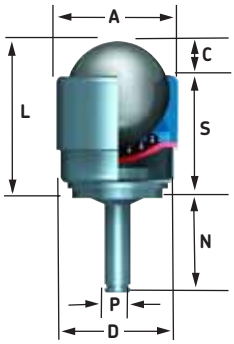

1709 grip neck fixing

Features:

Plastic or steel socket fixing.

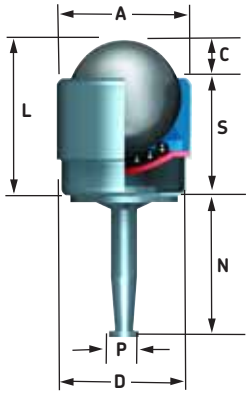

* see key to dimensions, page 3
** see key to maximum loading, page 3
general tolerances unless stated ± 0.3mm

ref no.	fixing	ball size (mm)	weight (kg)	dimensions (mm)*														maximum loading (lb)**			
				A	B	C	D	E	F	G	H	J	K	L	N	P	S	type 13	type 14	type 15	type 16
1700	plug	25.4	0.10	30.5	_	8.8	26.6	7.8	_	_	_	_	_	33.5	_	-	24.7	110	44	110	110
1701	bolt	25.4	0.12	30.5	_	8.8	26.6	_	_	_	_	_	_	33.5	18, 23, 28	M8	24.7	110	44	110	110
1702	flange	25.4	0.12	34.5	12.4	8.8	26.6	21.1	2	48 ±0.2	5.25	64	44	33.5	_	_	23.1	110	44	110	110
1703	plate	25.4	0.12	30.5	_	8.8	_	_	2	48 ±0.2	5.25	64	44	35.7	_	_	26.9	110	44	110	110
1704	pintle pin & circlip	25.4	0.12	30.5	_	8.8	26.6	_	_	_	_	_	_	36.7	24	7.7	27.9	110	44	110	110
1709	grip neck	25.4	0.12	30.5	_	8.8	26.6	_	_	_	_	_	_	34.7	34.7	7.7	25.9	110	44	110	110

Fixing sockets for glide units 1704 & 1709



1705



1706



1707



1708

ref. no	for glide unit	type	description
1705	**1709**	grip neck	Toothed steel socket & 19mm toothed plate For 9.5mm x 35mm drilled hole. **Application: wood**
1706	**1704**	toothed pintle	Toothed steel pintlesocket & 19mm toothed plate For 11.1mm x 42mm drilled hole. **Application: wood**
1707	**1709**	round plastic,splined	Round, plastic, splined socket Two sizes available i.e: O/D tube 15.8mm x 1.2mm wall and O/D tube 19.0mm x either 1.2 up to 1.6 wall thickness. **Application: round section tube**
1708	**1709**	square plastic, splined	Square, plastic, splined socket Two sizes available i.e: 19mm outside A/F square tube x 1.2mm up to 1.6mm wall and 25.4mm outside A/F square tube 1.2mm up to 1.6mm wall thickness. **Application: square section tube**

* see key to dimensions, page 3
** see key to maximum loading, page 3
general tolerances unless stated ± 0.3mm

Euro units

SKF Euro units have a main bearing cup of special toughened steel with a dirt exit hole and a felt or plastic seal.

Min. -22º F to max. +128º F continuous, or +212º F intermittent. Special seals may need to be fitted to suit extreme conditions.

In clean conditions and without seals +302º F to +362º F are possible, using Type 15 units at reduced loads.

Material spec:

Stainless steel housings	AISI 304
Stainless steel balls	AISI 420
Nylon balls	NYLON 66

Euro 0

Features:

Various fixing clips available, dimensionally compatible with the 800 series, see pages 32 & 33.

Felt seals are standard.

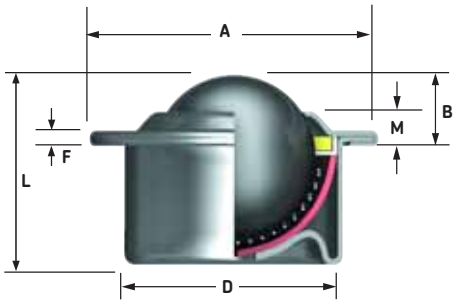



Euro 1

Features:

Pop rivet or screw fixing.

Felt seals are standard.

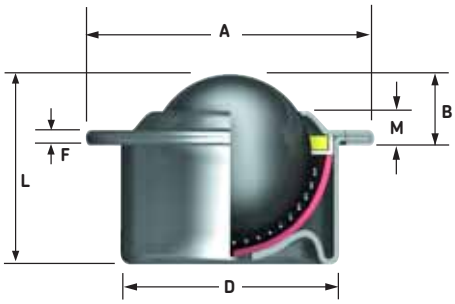

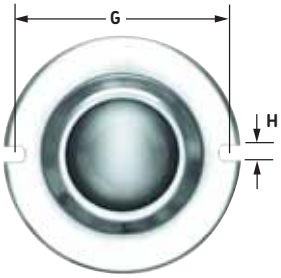

Euro 4

Features:

Various fixing clips available, coned outer ring. Dimensionally compatible with the 800 series, see pages 32 & 33.

Felt seals are standard.

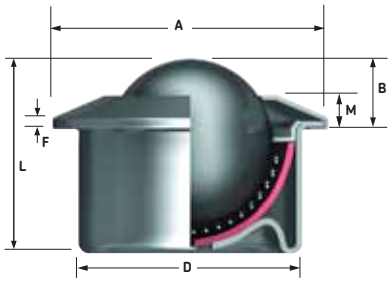

Euro 6

Features:

Various fixing clips available. Reinforced coned outer ring and support cup for improved protection against shock loading. Dimensionally compatible with the 800 series.

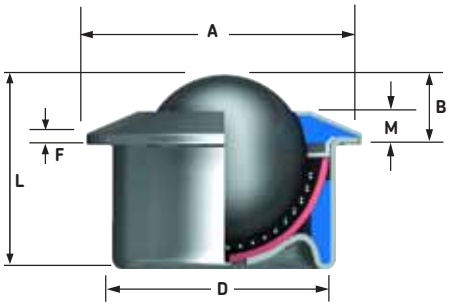

* see key to dimensions, page 3
** see key to maximum loading, page 3
general tolerances unless stated ± 0.3mm

SKF

ref no.	ball size (mm)	dimensions (mm)*								maximum loading (lb)**							
		A	B	D	F	G	H	M	L	type 13 wt	type 13 capacity	type 14 wt	type 14 capacity	type 15 wt	type 15 capacity	type 16 wt	type 16 capacity
515-0	15.8	31	9.5 ±0.2	24 ±0.065	2.8	_	_	6.3	21	.094	132	.061	22	.094	83	.094	132
515-1	15.8	31	9.5 ±0.2	24 ±0.065	2.8	29 ±0.2	3.5	6.3	21	.094	132	.061	22	.094	83	.094	132
515-4	15.8	31	9.5 ±0.2	24 ±0.065	2.8	_	_	6.3	21	.094	132	.061	22	.094	83	.094	132
515-6	15.8	31	9.5 ±0.2	24 ±0.065	2.8	_	_	6.3	21	.119	132	.086	22	.119	83	.119	132
522-0	22.2	45	9.8 ±0.2	36 ±0.08	2.8	_	_	5.5	30	.291	352	.211	44	.291	220	.291	352
522-1	22.2	45	9.8 ±0.2	36 ±0.08	2.8	42 ±0.2	3.5	5.5	30	.291	352	.211	44	.291	220	.291	352
522-4	22.2	45	9.8 ±0.2	36 ±0.08	2.8	_	_	5.5	30	.291	352	.211	44	.291	220	.291	352
522-6	22.2	45	9.8 ±0.2	36 ±0.08	2.8	_	_	5.5	30	.363	352	.286	44	.363	220	.363	352
530-0	30	55	13.8 ±0.3	45 ±0.08	4	_	_	8.3	37	.612	661	.401	55	.612	440	.612	661
530-1	30	55	13.8 ±0.3	45 ±0.08	4	51 ±0.2	3.5	8.3	37	.612	661	.401	55	.612	440	.612	661
530-4	30	55	13.8 ±0.3	45 ±0.08	4	_	_	8.3	37	.612	661	.401	55	.612	440	.612	661
530-6	30	55	13.8 ±0.3	45 ±0.08	4	_	_	8	37	.738	661	.524	55	.738	440	.738	661
545-0	44.5	75	19 ±0.4	62 ±0.095	4	_	_	10	53.5	1.598	1344	N/A	N/A	1.598	551	1.598	1344
545-1	44.5	75	19 ±0.4	62 ±0.095	4	69 ±0.2	4.3	10	53.5	1.598	1344	N/A	N/A	1.598	551	1.598	1344
545-4	44.5	75	19 ±0.4	62 ±0.095	4	_	_	10	53.5	1.598	1344	N/A	N/A	1.598	551	1.598	1344
545-6	44.5	75	19 ±0.4	62 ±0.095	4	_	_	10	53.5	1.955	1344	N/A	N/A	1.955	551	1.955	1344

CL14 fixing clips

Features:

Press in to fix ball unit, pry out ball unit to remove. See pages 32 & 33 for details.



ref. no.	suitable for units	fixing hole sizes (mm)	
CL14-515	515-0, 515-4, 515-6	24	+1.0 +1.5
CL14-522	522-0, 522-4, 522-6	36	+1.0 +1.5
CL14-530	530-0, 530-4, 530-6	45	+1.0 +1.5
CL14-545	545-0, 545-4, 545-6	62	+1.0 +1.5

To order, specify REF N°, i.e. CL14-515.
General tolerance unless stated ±0.3 mm.

* see key to dimensions, page 3
** see key to maximum Loading, page 3
general tolerances unless stated ± 0.3mm

Hi-tech units

Double seal

This is the first ball transfer design that incorporates double sealing for excluding debris from the bearings.

The top cover seal removes larger particles and the inner knife edge scraper seal skims liquid, paste, fine dust, etc. off the large ball and expels it through side vents.

A dirt exit hole can also be incorporated.

Rust resistant units (type 15 only)

All parts are of non-rusting material, impervious to the most severe industrial environment and have high impact resistance.

The main bearing track is hardened and has been load and life tested. The ball unit runs equally well inverted or at an angle.

Materials

Steel (type 13) or stainless (type 15) load components and bearings.

Hi-Tech units have the same rated load capacities as the Ø25.4 mm Hevi-Load units (see pages 20 & 21). The Hi-tech units have glass reinforced nylon bodies so their weight is less than half that of the Ø25.4 mm Hevi-Load units.

Stainless steel bearings with steel load components (type 16) are available on request.

Chemical resistance

High resistance to organic solvents, petrol and oil. Seek our advice if in doubt.

Temperature

-22º F up to +212º F

6025-0

Features:

High load capacity. Dimensionally compatible with Hevi-Load 7121.

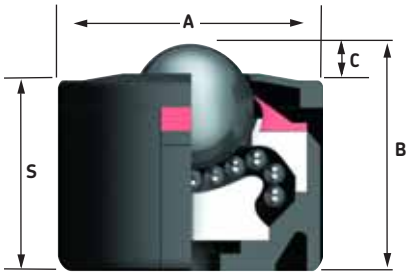

ref no.	bearing components	ball size (mm)	weight (g)	dimensions (mm)*													load capacity (lb)**	
				A	B	C	E	F	G	H	J	N	N	N	P	S	type 13	type 15
6025-0-15	stainless	25.4	238	50.8	45.0	6.7	_	_	_	_	_	_	_	_	_	38.3	_	529
6025-0-13	ferrous	25.4	238	50.8	45.0	6.7	_	_	_	_	_	_	_	_	_	38.3	705	_

* see key to dimensions, page 3

** see key to maximum loading, page 3

general tolerances unless stated ± 0.3mm

6025-1

Features:

Bolt fixing high load capacity. If used for height adjustment the locknut must remain secured to the body. Maximum tightening torque is 15Nm.

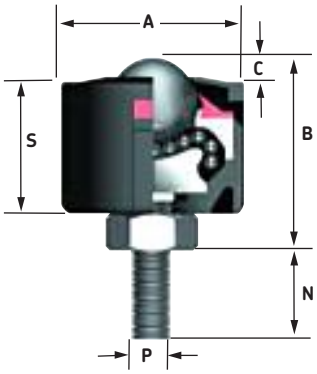

ref no.	bearing components	ball size (mm)	weight (g)	dimensions (mm)*											load capacity (lb)**	
				A	B	C	E	F	G	H	J	N	P	S	type 13	type 15
0625-1-15	stainless	25.4	274	50.8	53	6.7	_	_	_	_	_	17.6, 32.6, 42.6	M10	38.3	_	529
0625-1-13	ferrous	25.4	274	50.8	53	6.7	_	_	_	_	_	17.6, 32.6, 42.6	M10	38.3	705	_

6025-2

Features:

Top flange high load capacity. Dimensionally compatible with Hevi-Load 7125.

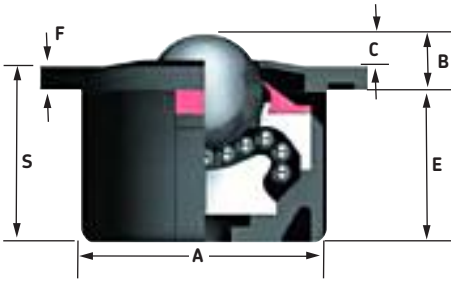

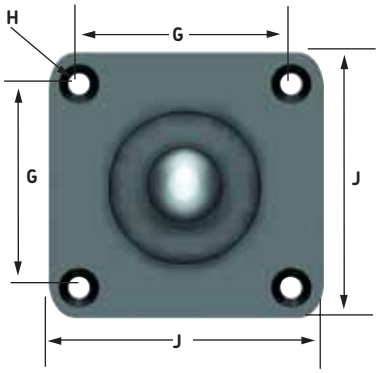

ref no.	bearing components	ball size (mm)	weight (g)	dimensions (mm)*													load capacity (lb)**	
				A	B	C	E	F	G	H	H_1	J	N	P	S		type 13	type 15
6025-2-15	stainless	25.4	260	50.8	13.0	6.7	32.0	6.3	58.0 ±0.2	6.7	13.2	76.0	_	_	38.3		_	529
6025-2-13	ferrous	25.4	260	50.8	13.0	6.7	32.0	6.3	58.0 ±0.2	6.7	13.2	76.0	_	_	38.3		705	_

* see key to dimensions, page 3
** see key to maximum loading, page 3
general tolerances unless stated ± 0.3mm

Hi-tech units

6025-3

Features:
High load capacity. Ball height compatible with Hevi-Load 7123.

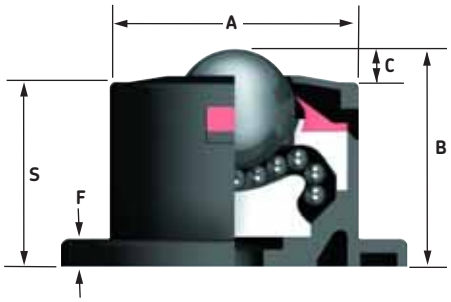

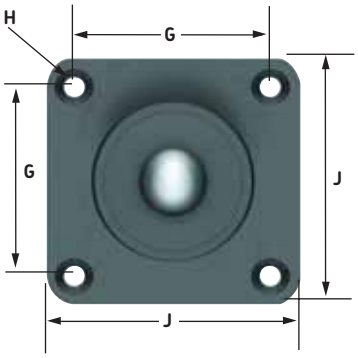

ref no.	bearing components	ball size (mm)	weight (g)	dimensions (mm)*												load capacity (lb)**	
				A	B	C	E	F	G	H	H_1	J	N	P	S	type 13	type 15
6025-3-15	stainless	25.4	260	50.8	45.0	6.7	_	6.3	58.0 ±0.2	6.7	13.2	76.0	_	_	38.3	_	529
6025-3-13	ferrous	25.4	260	50.8	45.0	6.7	_	6.3	58.0 ±0.2	6.7	13.2	76.0	_	_	38.3	705	_

6025-4

Features:
High load capacity. Coned flange for smoother on/off transfer.

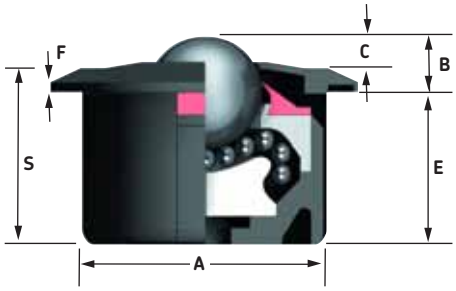

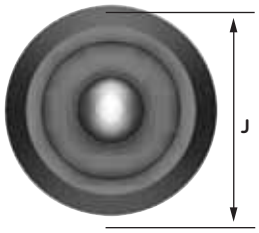

ref no.	bearing components	ball size (mm)	weight (g)	dimensions (mm)*											load capacity (lb)**	
				A	B	C	E	F	G	H	J	N	P	S	type 13	type 15
6025-4-15	stainless	25.4	250	50.8	13.0	6.7	32.0	3.0	_	_	68.6	_	_	38.3	_	529
6025-4-13	ferrous	25.4	250	50.8	13.0	6.7	32.0	3.0	_	_	68.6	_	_	38.3	705	_

* see key to dimensions, page 3
** see key to maximum loading, page 3
general tolerances unless stated ± 0.3mm

SKF

6025-5

Features:

Ideal for shock loading. Stainless steel springs available on request. Compatible with Hevi-Load 7136, 7139, 7137, 7135.

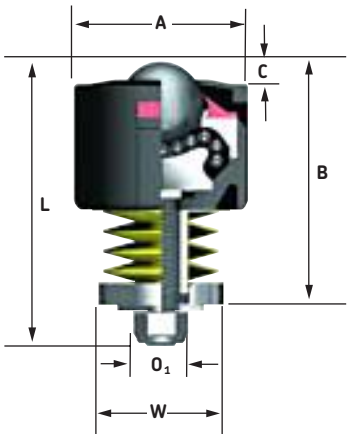

ref no.	bearing components	ball size	weight (g)	dimensions (mm)*							load capacity (lb)**	
				A	B	C	L	O_1	W	lb	lb	mm
6025-5-15A	stainless	25.4	330	50.8	61.9	6.7	77.0	20.0	38.1	15	220	3.2
6025-5-13A	ferrous	25.4	330	50.8	61.9	6.7	77.0	20.0	38.1	15	220	3.2
6025-5-15B	stainless	25.4	330	50.8	61.5	6.7	77.0	20.0	38.1	50	242	3.2
6025-5-13B	ferrous	25.4	330	50.8	61.5	6.7	77.0	20.0	38.1	50	242	3.2
6025-5-15C	stainless	25.4	330	50.8	60.7	6.7	77.0	20.0	38.1	99	264	3.2
6025-5-13C	ferrous	25.4	330	50.8	60.7	6.7	77.0	20.0	38.1	99	264	3.2
6025-5-15D	stainless	25.4	335	50.8	61.9	6.7	77.0	20.0	38.1	154	275	3.2
6025-5-13D	ferrous	25.4	335	50.8	61.9	6.7	77.0	20.0	38.1	154	275	3.2
6025-5-15E	stainless	25.4	470	50.8	81.0	6.7	98.4	20.0	38.1	198	463	3.2
6025-5-13E	ferrous	25.4	470	50.8	81.0	6.7	98.4	20.0	38.1	198	463	3.2
6025-5-15F	stainless	25.4	470	50.8	79.8	6.7	98.4	20.0	38.1	308	540	3.2
6025-5-13F	ferrous	25.4	470	50.8	79.8	6.7	98.4	20.0	38.1	308	540	3.2
6025-5-15G	stainless	25.4	480	50.8	81.0	6.7	98.4	20.0	38.1	396	595	3.2
6025-5-13G	ferrous	25.4	480	50.8	81.0	6.7	98.4	20.0	38.1	396	595	3.2
6025-5-15H	stainless	25.4	490	50.8	81.0	6.7	98.4	20.0	38.1	507	683	3.2
6025-5-13H	ferrous	25.4	490	50.8	81.0	6.7	98.4	20.0	38.1	507	683	3.2

general spring rating tolerance unless stated ± 10%

* see key to dimensions, page 3
** see key to maximum loading, page 3
general tolerances unless stated ± 0.3mm

Hevi-Load units type 0 & 1

SKF Hevi-Load units are designed and manufactured to precise standards.

They offer the highest performance available in load transfer applications with load ball sizes from 12.7mm to 50.8mm diameters and a load capacity range from 77 lbs to 4400 lbs used either ball up or ball down.

Hevi-Load units run on the recirculating ball principal. The load ball rotates on a bed of small balls supported on a hardened steel, precision machined table.

They can work at maximum capacity in temperatures from -22º F to +212º F.

Drain hole or grease points can be incorporated on request.

No spanner flats for 7110 and 7106 Hevi-Load units.

Type 15 units (all stainless steel) available on request. When using stainless balls, reduce type 13 load capacity by 33.3%.

All units are machined using CNC machines from one piece of steel, therefore flanges and threads are integral.

Hevi-Load type 0

Features:

High load capacity, robust body. The Hevi-Load 7121 is dimensionally compatible with the Hi-Tech 6025-0.

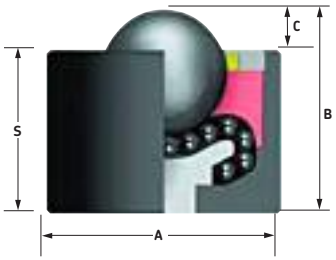

Hevi-Load type 1

Features:

High load capacity, bolt fixing. Two spanner flats for fixing and removing. Drill hole fixing. Maximum tightening torques range from 15Nm for M8 to 25Nm for M24.

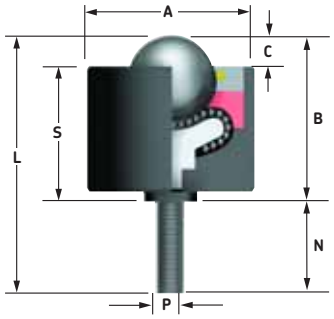

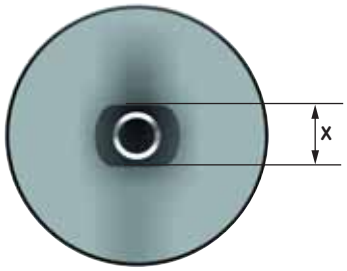

	ref no.	ball size (mm)	weight (kg)	dimensions (mm)*								load capacity (lb)**	
				A	B	C	L	N	S	P	X	type 13	type 16
type 0	7101††	12.7	0.036	20.6	19.6	3.5	_	_	16.1	_	_	77	77
	7120	25.4	0.394	44.5	41.4	5.6	_	_	35.8	_	_	297	297
	7121	25.4	0.550	50.8	44.7	6.1	_	_	38.6	_	_	705	474
	7150	38.1	1.0	60.3	61.5	13.0	_	_	48.5	_	_	2204	1477
	7170	50.8	5.02	101.6	98.4	14.3	_	_	84.1	_	_	4409	2932
type 1	7110††	12.7	0.042	20.6	19.6	3.5	35.8	16.2	16.1	5/16" UNF	_	77	77
	7106††	12.7	0.042	20.6	19.6	3.5	35.8	16.2	16.1	M8	_	77	77
	7127	25.4	0.431	44.5	48.3	5.6	72.4	24.1	42.7	1/2" UNF	19	297	297
	7128	25.4	0.431	44.5	48.3	5.6	72.4	24.1	42.7	M12	19	297	297
	7130	25.4	0.581	50.8	51.3	6.1	77	25.7	45.2	M12	19	705	474
	7131	25.4	0.581	50.8	51.3	6.1	77	25.7	45.2	1/2" UNF	19	705	474
	7153	38.1	1.14	60.3	73.5	13	114.3	40.8	60.5	M20	30	2204	1477
	7154	38.1	1.14	60.3	73.5	13	114.3	40.8	60.5	3/4" UNF	30	2204	1477
	7172	50.8	5.26	101.6	109.1	14.3	159	49.9	94.8	M24	38	4409	2932
	7173	50.8	5.26	101.6	109.1	14.3	159	49.9	94.8	1" UNF	38	4409	2932

* see key to dimensions, page 3

** see key to maximum loading, page 3

general tolerances unless stated ± 0.3mm

†† The 7101, 7110, 7106, 7104 and 7103 Hevi-Load units incorporate a conventional bearing shell.

SKF

Hevi-Load type 2

Features:

High load capacity, top flange fixing. The Hevi-Load 7125 is dimensionally compatible with the Hi-tech 6025-2.

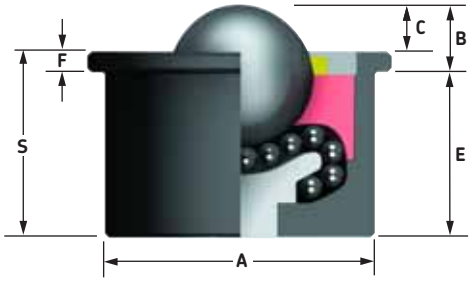

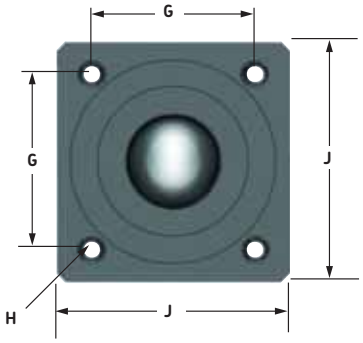

Hevi-Load type 3

Features:

High load capacity, bottom flange fixing. Drill hole fixing. The Hevi-Load 7123 is dimensionally compatible with the Hi-tech 6025-3.

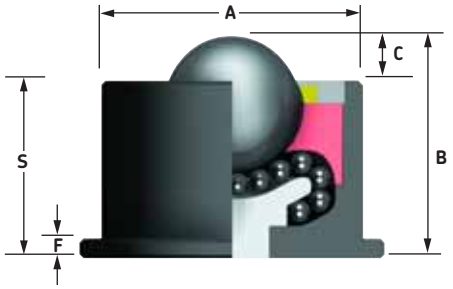

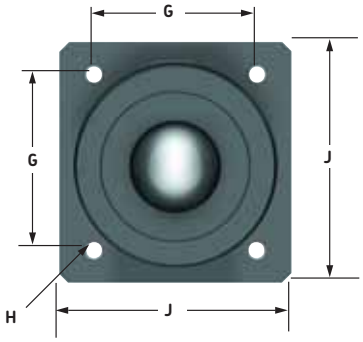

type 2

ref no.	ball size (mm)	weight (kg)	dimensions (mm)*										load capacity (lb)**	
			A	B	C	E	F	G	H	H_2	J	S	type 13	type 16
7104††	12.7	0.082	23.8	11.2	3.5	11.2	3.2	34.8 ±0.2	3.6	2x	44.5	19.1	77	77
7124	25.4	0.463	44.5	10.3	5.6	31.3	4.7	44.5 ±0.2	5.6	4x	57.2	36	297	297
7125	25.4	0.746	50.8	13.0	6.1	32.0	6.9	57.9 ±0.2	7.1	4x	76.2	38.9	705	474
7152	38.1	1.24	60.5	25.4	13	35.8	12.4	57.9 ±0.2	7.1	4x	76.2	48.2	2204	1477
7171	50.8	6.14	101.6	33.3	14.3	65.0	19.0	101.6 ±0.2	11	4x	127.0	84	4409	2932

type 3

ref no.	ball size (mm)	weight (kg)	dimensions (mm)*										load capacity (lb)**	
			A	B	C	E	F	G	H	H_2	J	S	type 13	type 16
7103††	12.7	0.086	23.8	22.6	3.5	_	3.2	34.8 ±0.2	3.6	2x	44.5	19.1	77	77
7122	25.4	0.459	44.5	41.4	5.6	_	4.8	44.5 ±0.2	5.6	4x	57.2	35.8	297	297
7123	25.4	0.735	50.8	45.5	6.4	_	6.3	57.9 ±0.2	7.1	4x	76.2	39.1	705	474
7151	38.1	1.3	60.5	62.2	13	_	12.7	57.9 ±0.2	7.1	4x	76.2	49.2	2204	1477
7174	50.8	5.52	101.6	98.3	14.3	_	9.6	101.6 ±0.2	11	4x	127.0	84.0	4409	2932

††The 7101, 7110, 7106, 7104 and 7103 Hevi-Load units incorporate a conventional bearing shell.

* see key to dimensions, page 3
** see key to maximum loading, page 3
general tolerances unless stated ± 0.3mm

Hevi-Load units type 5

Hevi-Load type 5

Features:

High load capacity, greater shock loading protection. Screw fixing collar for Ø38.1mm and Ø50.8mm ball units only, for secure fixing in ball down applications.

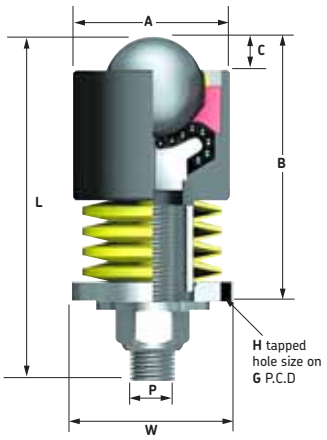

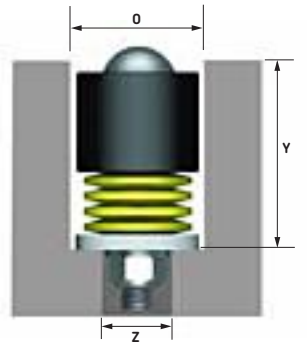

General spring rating tolerance ± 10%

ref no.	ball size (mm)	weight (kg)	dimensions (mm)*											load capacity (lb)**				
			A	B	C	G	H	L	O	P	W	Y	Z	type 13	type 16	type 13 load for maximum deflection	type 16 load for maximum deflection	maximum deflection (mm)
7107‡	12.7	0.067	20.6	32.2	3.5	_	_	47.0	22	M8	20.6	30.2	16	15	15	66	66	2
7108‡	12.7	0.067	20.6	31.8	3.5	_	_	47.0	22	M8	20.6	29.8	16	33	33	77	77	2
7109‡	12.7	0.069	20.6	32.2	3.5	_	_	47.0	22	M8	20.6	30.2	16	55	55	88	88	3.2
7138	25.4	0.517	44.5	61.9	5.6	_	_	77.0	46	M10	38.1	58.7	22	15	15	220	220	3.2
7132	25.4	0.517	44.5	61.5	5.6	_	_	77.0	46	M10	38.1	58.3	22	55	55	242	242	3.2
7133	25.4	0.517	44.5	60.7	5.6	_	_	77.0	46	M10	38.1	57.5	22	99	99	264	264	3.2
7134	25.4	0.522	44.5	61.9	5.6	_	_	77.0	46	M10	38.1	58.7	22	154	154	275	275	3.2
7135	25.4	0.795	50.8	81.0	6.1	_	_	98.4	52	M10	38.1	77.8	22	198	198	463	463	3.2
7136	25.4	0.795	50.8	79.8	6.1	_	_	98.4	52	M10	38.1	76.6	22	308	308	540	540	3.2
7139	25.4	0.804	50.8	81.0	6.1	_	_	98.4	52	M10	38.1	77.8	22	396	396	595	595	3.2
7137	25.4	0.813	50.8	81.0	6.1	_	_	98.4	52	M10	38.1	77.8	22	507	507	683	683	3.2
7155	38.1	1.860	60.3	115.5	13	50.8 ±0.2	3x M5	161.1	62	M16	59.4	109.9	32	496	496	1388	1388	5.6
7158	38.1	1.940	60.3	121.3	13	50.8 ±0.2	3x M5	161.1	62	M16	59.4	115.7	32	683	407	1510	837	5.6
7159	38.1	2.040	60.3.	128.2	13	50.8 ±0.2	3x M5	161.1	62	M16	59.4	122.6	32	1014	507	1686	903	5.6
7156	38.1	1.980	60.3	127.0	13	50.8 ±0.2	3x M5	161.1	62	M16	59.4	121.4	32	1245	826	1829	1510	5.6
7160	38.1	2.220	60.3	145.1	13	50.8 ±0.2	3x M5	189.7	62	M16	59.4	139.5	32	1521	1014	1929	1455	5.6
7157	38.1	2.620	60.3	156.4	13	50.8 ±0.2	3x M5	189.7	62	M16	59.4	150.8	32	1675	1245	2006	1642	5.6
7178	50.8	9.0	101.6	179.4	14.3	76 ±0.2	4x M8	200.8	103	M24	101.6	173.1	44	1752	738	3020	1455	6.3
7175	50.8	9.0	101.6	177.4	14.3	76 ±0.2	4x M8	200.8	103	M24	101.6	171.1	44	2204	1510	3560	2105	6.3
7176	50.8	9.0	101.6	174.6	14.3	76 ±0.2	4x M8	200.8	103	M24	101.6	168.3	44	2722	1829	3927	2270	6.3
7177	50.8	9.0	101.6	171.5	14.3	76 ±0.2	4x M8	200.8	103	M24	101.6	165.2	44	3439	2050	4299	3351	6.3

‡Ball units 7107, 7108 and 7109 incorporate the shell ball design.

* see key to dimensions, page 3
** see key to maximum loading, page 3
general tolerances unless stated ± 0.3mm

Hevi-Load type 6

Features:

Compact, interference fitting, greater shock loading protection.

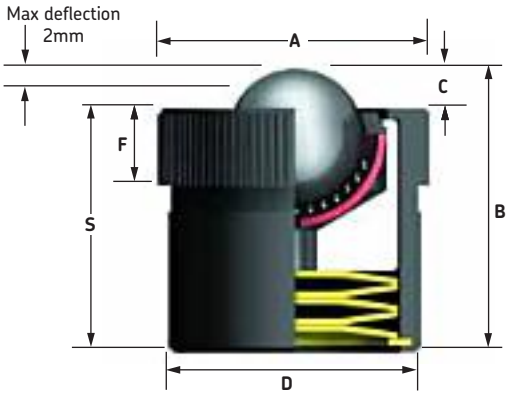

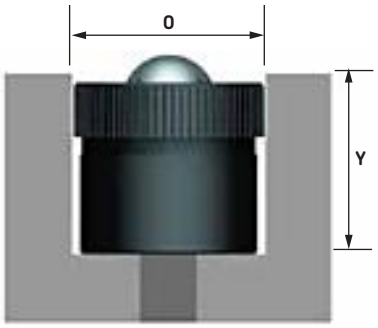

General spring rating tolerance ± 10%

ref no.	ball size (mm)	weight (kg)	dimensions (mm)*								load capacity (lb)**				
			A	B	C	D	F	O	S	Y	type 13	type 16	type 13 load for maximum deflection	type 16 load for maximum deflection	maximum deflection (mm)
7105	12.7	0.078	25.6	28.5	3.1	25.4	8	25.4 +0.15 +0.05	25.4	26.5	55	55	88	88	

Die-lifters

Features:

Tolerance ring for interference fitting for ball up and ball down fitting. Greater shock loading protection.

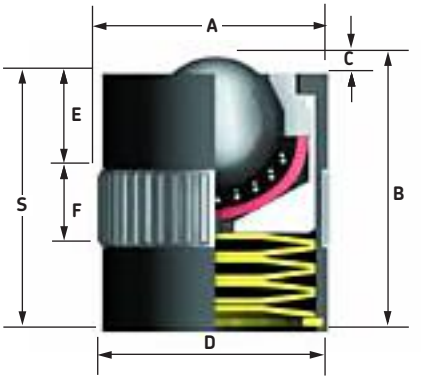

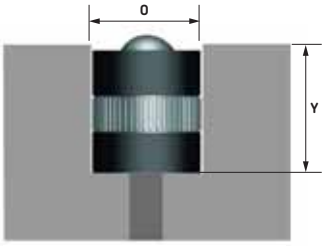

At zero deflection

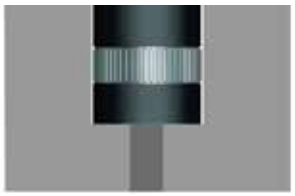

At maximum deflection

General spring rating tolerance ± 10%

ref no.	ball size (mm)	weight (kg)	dimensions (mm)*									load capacity (lb)**				
			A	B	C	D	E	F	O	S	Y	type 13	type 16	type 13 load for maximum deflection	type 16 load for maximum deflection	maximum deflection (mm)
DL-24	12.7	0.074	24.5	30	1.5	23.9	9	10.5	24.1	28.5	28.6	88	88	198	198	1.5
DL-30	15.8	0.127	30.5	36	1.5	29.9	12	10.5	30.1	34.5	34.6	132	132	242	242	1.5
DL-40	25.4	0.320	40.5	48	1.5	39.8	12	10.5	40.1	46.5	46.6	220	220	385	385	1.5
DL-50	30	0.660	50.5	60	1.5	49.9	15	12.3	50.1	58.5	58.6	738	440	1289	1025	1.5
DL-70	38.1	2.000	71	80	2	70	19	19	70.2	78	78.1	1102	716	1587	1256	2

* see key to dimensions, page 3
** see key to maximum loading, page 3
general tolerances unless stated ± 0.3mm

Tuff series heavy duty units

SKF Tuff series heavy duty units are built to provide a long working life and to withstand harsh conditions.

They have a solid machined body with chrome steel bearings and incorporate both dust seal and dirt exit hole (except No. 0519).

They provide a higher load capacity than standard units. Solid steel housing for attachment purposes, but not shock loading. All units are machined using CNC machines from one piece of steel, therefore flanges and threads are integral.

Also available

All patterns (i.e.: 21,22,23 and 24) of ref numbers 0519, 3019 and 1019 are available with a nylon main ball (type 14) ideal for light load and reduced marking applications.

Tuff heavy duty 21

Features:

Plain solid machined body.

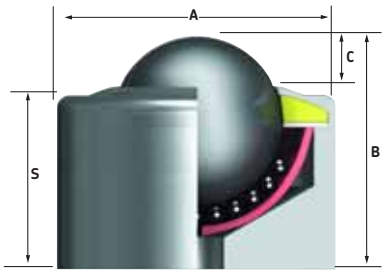

Tuff heavy duty 22

Features:

Flange fixing either by using rivets or screws.

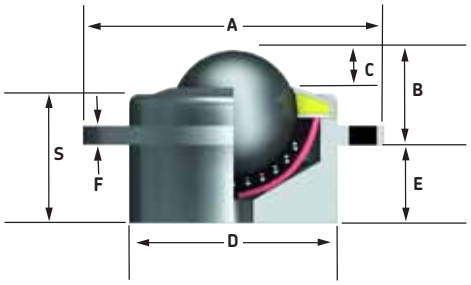

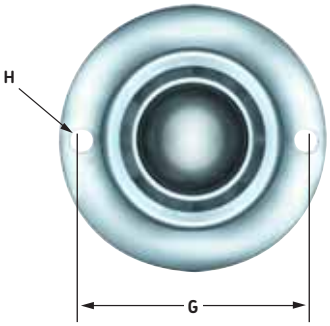

Tuff heavy duty 23

Features:

Bolt, drilled hole fixing. Maximum tightening torques range from 10Nm for M6 to 20Nm for M12.

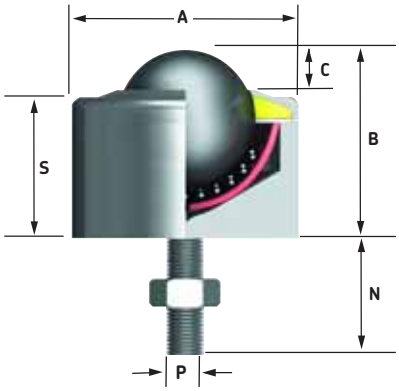

Tuff heavy duty 24

Features:

Bottom flange fixing either by using rivets or screws. Drilled hole fixing.

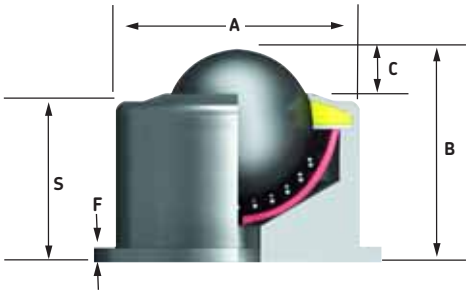

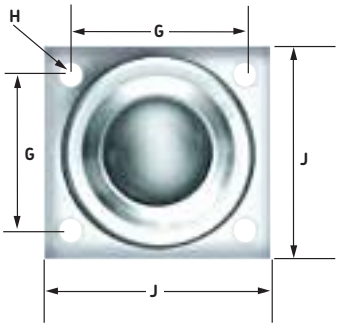

* see key to dimensions, page 3

** see key to maximum loading, page 3

general tolerances unless stated ± 0.3mm

Tuff series heavy duty units

ref no.	ball size (mm)	weight (g)	dimensions (mm)*												load capacity (lb)**		
			A	B	C	D	E	F	G	H	J	N	P	S	type 13	type 15	type 16
0519-21	12.7	36	20	20	2	_	_	_	_	_	_	_	_	17	55	55	55
0519-22	12.7	51	32	12	2	20	8	4	26 ±0.2	3	_	_	_	17	55	55	55
0519-23	12.7	42	20	20	2	_	_	_	_	_	_	28	M6	17	55	55	55
0519-24	12.7	96	20	25	2	_	_	6	24 ±0.2	6.5	35	_	_	22	55	55	55
3019-21	19	120	30	30	4	_	_	_	_	_	_	_	_	26	110	110	110
3019-22	19	168	50	14	4	30	16	5	40 ±0.2	5	_	_	_	26	110	110	110
3019-23	19	124	30	30	4	_	_	_	_	_	_	25	M8	26	110	110	110
3019-24	19	220	30	35	4	_	_	6	31 ±0.2	7	44.5	_	_	31	110	110	110
1019-21	25.4	177	35	35	7	_	_	_	_	_	_	_	_	28	275	275	275
1019-22	25.4	282	60	20	7	40	15	5	49 ±0.2	5	_	_	_	28	275	275	275
1019-23	25.4	190	35	35	7	_	_	_	_	_	_	40	M8	28	275	275	275
1019-24	25.4	294	35	40	7	_	_	6	35 ±0.2	7	50	_	_	33	275	275	275
1029-21	31.7	486	50	45	8	_	_	_	_	_	_	_	_	37	551	551	551
1029-22	31.7	584	75	24	8	50	21	5	62.5 ±0.2	5	_	_	_	37	551	551	551
1029-23	31.7	500	50	45	8	_	_	_	_	_	_	40	M10	37	551	551	551
1029-24	31.7	740	50	50	8	_	_	8	49 ±0.2	7	63.45	_	_	42	551	551	551
2019-21	39.7	850	60	55	9	_	_	_	_	_	_	_	_	46	1102	551	1102
2019-22	39.7	960	84	27	9	60	28	5	72 ±0.2	6	_	_	_	46	1102	551	1102
2019-23	39.7	900	60	55	9	_	_	_	_	_	_	50	M12	46	1102	551	1102
2019-24	39.7	1350	60	60	9	_	_	10	60 ±0.2	7	80	_	_	51	1102	551	1102

* see key to dimensions, page 3
** see key to maximum loading, page 3
general tolerances unless stated ± 0.3mm

Heavy duty units, series 800, 810 and 820

SKF series 800 are solid body steel ball units.

They incorporate a seal and dirt exit hole for maximum efficiency and smooth running.

Our CNC production plant can produce special designs to individual customers requirements.

Easy fixing clips are available, ref no. CL14, for quick and effective fixing, see pages 32 and 33. When used, the working height of the ball unit dimension 'B' is increased by 0.3mm.

800 series type 15, stainless steel

In general ball unit sizes from Ø15.8mm to Ø44.5mm will have unhardened components typically 304 stainless steel.

Ball units with Ø57.1mm, Ø76.2mm and Ø88.9mm balls have hardened bodies.

Heavy duty 800

Features:

High load capacity, low profile, robust construction.

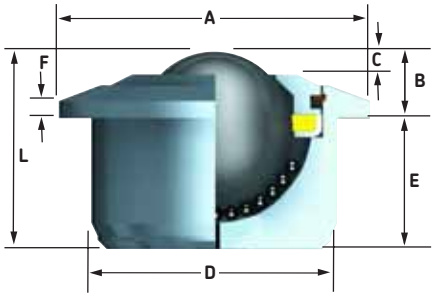

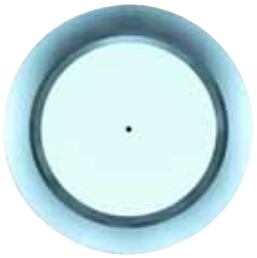

Heavy duty 810

Features:

High load capacity, low profile, coned outer ring.

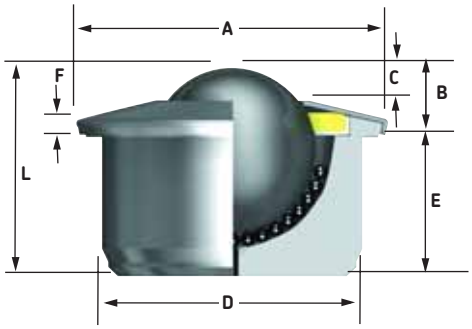

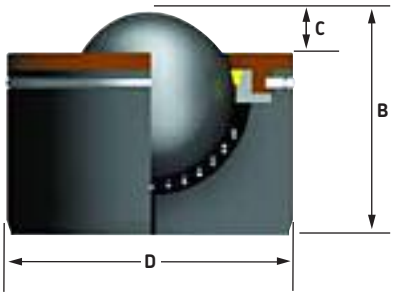

Heavy duty 820

Features:

High load capacity, solid body and robust outer ring for greater durability. Can be dismantled for cleaning.

ref no.	ball size (mm)	weight (kg)	dimensions (mm)*							maximum loading (lb)**		
			A	B	C	D	E	F	L	type 13 ball up	type 15 ball up	type 16 ball up
800-22	22.2	0.18	45	9.8 ±0.2	3.8	36 ±0.08	20.7	3.0	30.5	396	264	396
800-30	30	0.38	55	13.8 ±0.2	5.5	45 ±0.08	23	3.4	36.8	771	440	771
800-45	44.5	1.10	75	19	9	62 ±0.1	34.5	3.8	53.5	1322	661	1322
800-60	57.1	3.80	117	29.5	16.5	100 ±0.1	48	5.0	77.5	3306	2204	2204
810-15	15.8	0.06	31	9.5	4	24 ±0.06	11.5	3.8	21	123	94	123
810-22	22.2	0.20	45	9.8 ±0.2	3.5	36 ±0.08	20.7	4.0	30.5	396	264	396
810-30	30	0.37	55	13.8 ±0.2	5.5	45 ±0.08	23	5.0	36.8	771	440	771
810-45	44.5	0.99	75	19	9	62 ±0.1	34.5	4.5	53.5	1322	661	1322
820-60	57.1	3.5	_	77.5	16.5	100 ±0.1	_	_	_	3306	_	2204
820-76	76.2	8.6	_	103	23	130 ±0.1	_	_	_	6613	_	5511
820-90	88.9	11.0	_	115	25	145 ±0.1	_	_	_	8818	_	7716

* see key to dimensions, page 3

** see key to maximum loading, page 3

general tolerances unless stated ± 0.3mm

805, 806 and 807 heavy duty ball transfers are similar to the 800 series units. These "air cargo ball transfer units" incorporate a stainless steel multi-hole drain plug or 10 x 2mm slot for improved cleaning and debris removal, stainless bearings for corrosion resistance, and no seal for smoother running.

Heavy duty 805

Features:

High load capacity, low profile, robust construction. Multi-hole drain plug provides an extra 600% debris hole area to assist in cleaning.

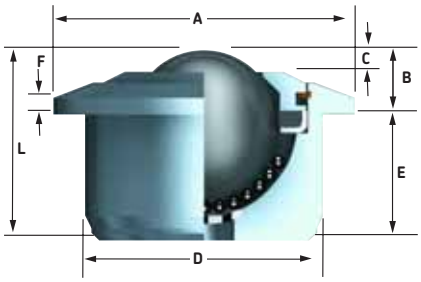



Heavy duty 806

Features:

Solid machined top for maximum protection from impacts. Unique design allows unit to be cleaned or repaired onsite. 10 x 2mm debris removal slot.

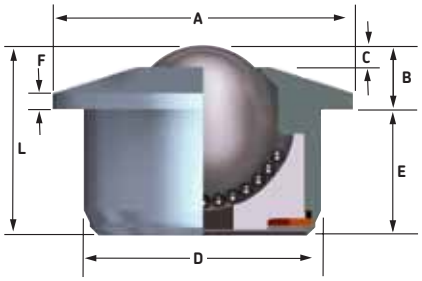



Heavy duty 807

Features:

Solid machined top for maximum protection from impacts. Reduced noise emissions due to design 10 x 2mm debris removal slot.

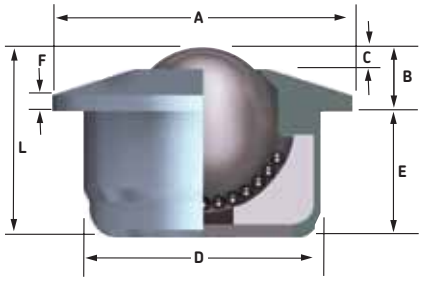



ref no.	ball size (mm)	weight (kg)	dimensions (mm)*							maximum loading (lb)**		
			A	B	C	D	E	F	L	type 13 ball up	type 15 ball up	type 16 ball up
805-30	30	0.38	55	13.8 ±0.2	5.5	45 ±0.08	23	3.4	36.8	771	440	771
805-45	44.5	1.10	75	19	9	62 ±0.1	34.5	3.8	53.5	1322	661	1322
806-30	30	0.35	55	13.8 ±0.2	5.5	45 ±0.08	23	3.4	36.8	771	440	771
807-30	30	0.36	55	13.8 ±0.2	5.5	45 ±0.08	23	3.4	36.8	771	440	771

* see key to dimensions, page 3
** see key to maximum loading, page 3
general tolerances unless stated ± 0.3mm

Spring loaded units

SKF spring loaded units are used in applications such as: shearing machines; presses; molding machines; tool bases; press brakes; shock loading applications.

Spring loaded ball units reduce damage caused by shock loads. They also allow for dimension changes due to temperature and self-adjust to evenly distribute loads.

1507, 1508 and 1509 units

These units incorporate a plastic scraper seal, which keeps debris outside the ball unit.

Spring loaded ball unit sizes Ø31.7mm, Ø39.7mm and Ø50.8mm have dirt exit holes as standard. All other spring loaded ball units have felt or foam seals as standard.

Spring loaded ball units can be used as die-lifters, inverted or at an angle.

See pages 22 and 23 for details of our Hevi-Load spring loaded ball units and Die-lifter ball units.

Completely stainless steel (type 15) spring loaded ball units also available upon request with reduced support loads and depress loads.

Spring loaded ball units with ball sizes of Ø25.4mm also available upon request with nylon load ball and stainless bearings (type 14).

The type 14 ball units are suitable for light load applications and when object surface protection is required.

The 1507 and 1509 ball units have 2mm thick pressed steel flanges.

Large top flange

Features:

Large top flange fixing. Low profile.

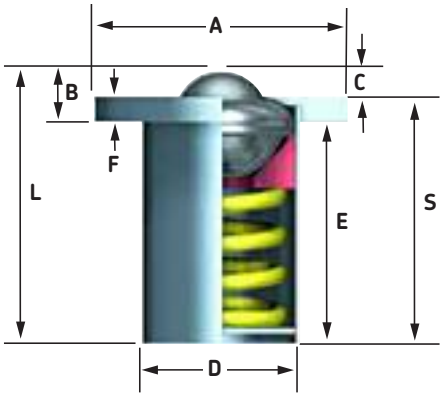

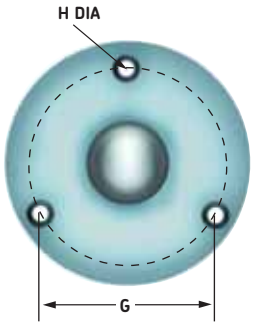

Large bottom flange

Features:

Large bottom flange fixing. High profile.

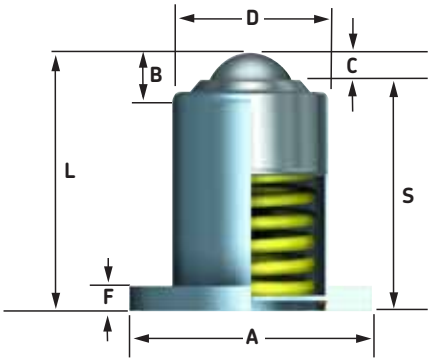

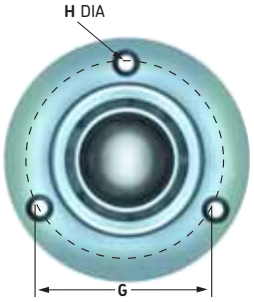

Plain body

Features:

Plain body. Low profile.

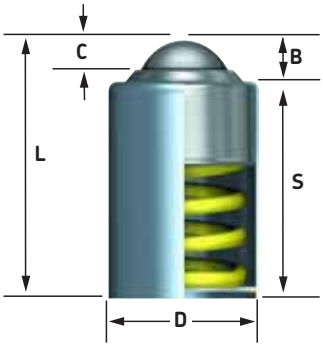

Small top flange

Features:

Small flange. Low profile.

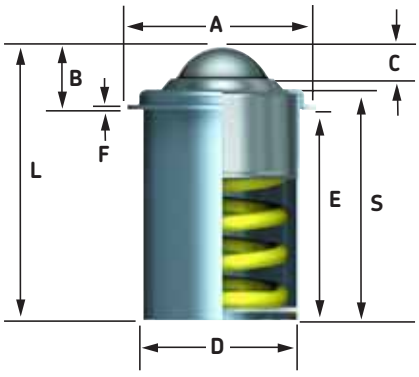

* see key to dimensions, page 3
** see key to maximum loading, page 3
general tolerances unless stated ± 0.3mm

ref no.	ball size (mm)	weight (kg)	dimensions (mm)*										support load (lbs)		load to fully depress (lbs)
			A	B	C	D	E	F	G	H	L	S	type 13	type 16	
3011	19	0.42	66.6 +0.0 -1.0	11.4	3.5	36.5	51.6	7.9	50.8 ±0.2	3x 7	63	59.5	22	22	66
1018	25.4	0.57	75 +0.0 -1.0	13.8	5.9	44.5	53.3	7.9	60.3 ±0.2	3x 7	67.1	61.2	77	77	220
1507	25.4	0.40	71.3 +0.0 -1.0	19.3	6.7	44.5	52.9	2	60.4 ±0.2	2x 5.1	72.2	61.3	110	110	286
1028	31.7	1.16	89 +0.0 -1.0	17	7.5	60	77.5	9.5	73 ±0.2	3x 7	94.6	87.1	220	220	396
2010	39.7	2.04	101.6 +0.0 -1.0	17.7	8.2	69.8	90	9.5	85.7 ±0.2	3x 9	107.7	99.5	220	220	374
4008	50.8	5.1	152.4 +0.0 -1.0	25.7	13.0	101.6	114	12.7	127 ±0.2	3x 9	139.7	126.7	374	374	903
3012	19	0.42	66.6 +0.0 -1.0	9.5	4.7	36.5	_	7.9	50.8 ±0.2	3x 7	65.1	55.6	22	22	77
1510	25.4	0.45	75 +0.0 -1.0	12.5	6.7	44.5	_	7.9	60.3 ±0.2	3x 7	72.9	60.4	110	110	286
1032	31.7	1.02	89 +0.0 -1.0	10.4	7.7	60	_	9.5	73 ±0.2	3x 7	95.3	84.9	220	220	440
3009	19	0.26	_	9.5	4.7	36.5	_	_	_	_	65.1	55.6	22	22	77
1016	25.4	0.38	_	11.9	6.3	44.5	_	_	_	_	70.6	58.7	77	77	308
1508	25.4	0.38	_	12.5	6.7	44.5	_	_	_	_	72.9	60.4	110	110	286
1026	31.7	0.86	_	10.4	7.7	60	_	_	_	_	95.3	84.9	220	220	440
2008	39.7	1.46	_	12.7	9.1	69.8	_	_	_	_	107.6	94.9	220	220	418
4006	50.8	4.2	_	13	13	101.6	_	_	_	_	139.7	126.7	374	374	903
3010	19	0.30	45 +0.0 -1.0	11.4	3.5	36.5	51.6	7.9	_	_	63	59.5	22	22	66
1017	25.4	0.44	50 +0.0 -1.0	13.8	5.9	44.5	53.3	7.9	_	_	67.1	61.2	77	77	220
1509	25.4	0.39	56 +0.0 -1.0	19.3	6.7	44.5	52.9	2	_	_	72.2	61.3	110	110	286
1027	31.7	0.99	75 +0.0 -1.0	17	7.5	60	77.5	9.5	_	_	94.6	87.1	220	220	396
2009	39.7	1.8	75 +0.0 -1.0	17.7	8.2	69.8	90	9.5	_	_	107.7	99.5	220	220	374
4007	50.8	4.4	114.3 +0.0 -1.0	25.7	13	101.6	114	12.7	_	_	139.7	126.7	374	374	903

General spring rating tolerance ± 10%

* see key to dimensions, page 3
** see key to maximum loading, page 3
general tolerances unless stated ± 0.3mm

Miniature ball transfer units

11MI-05-17 – 11MI-15-16

Applications:

Measuring equipment.
Lightweight coilhander.
Guides for small linear motion
(eg photo copier slides).
Transfer of material in clean rooms.

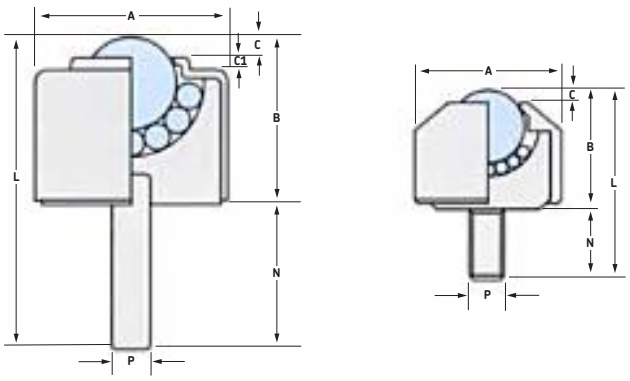

ref no.	ball size (mm)	weight (kg)	dimensions (mm)*							load rating (lbs)
			A	B	C	C_1	L	N	P	
11MI-05-17	4.8	0.003	8.0	6.0	1.0	_	8.5	2.5	M2	22
11MI-05-13	4.8	0.01	13.0	9.0	1.0	_	24.0	15.0	M6	44
11MI-05-15	4.8	0.01	13.0	9.0	1.0	_	24.0	15.0	M6	44
11MI-06-17	6.4	0.011	13.0	10.5	1.0	_	16.5	6.0	M3	39
11MI-06-13	6.4	0.02	17.0	11.0	2.0	_	26.0	15.0	M6	77
11MI-06-15	6.4	0.02	17.0	11.0	2.0	_	26.0	15.0	M6	77
11MI-08-17	7.9	0.021	15.0	12.5	1.0	_	20.5	8.0	M4	55
11MI-08-13	7.9	0.03	18.0	14.0	2.0	_	32.0	18.0	M8	110
11MI-08-15	7.9	0.03	18.0	14.0	2.0	_	32.0	18.0	M8	110
11MI-10-13	9.6	0.06	23.0	20.0	2.0	2.5	40.0	20.0	M8	154
11MI-10-15	9.6	0.06	23.0	20.0	2.0	2.5	40.0	20.0	M8	154
11MI-13-13	12.7	0.10	28.0	25.0	3.5	4.0	48.0	23.0	M8	176
11MI-13-15	12.7	0.10	28.0	25.0	3.5	4.0	48.0	23.0	M8	176
11MI-16-13	15	0.05	24.0	20.5	4.0	_	32.5	12.0	M6	264
11MI-16-15	15	0.05	24.0	20.5	4.0	_	32.5	12.0	M6	264

Type 13 denotes carbon balls and housing
Type 15 denotes stainless steel balls and housing
Type 17 denotes aluminum housing and stainless steel balls

* see key to dimensions, page 3
** see key to maximum loading, page 3
general tolerances unless stated ± 0.3mm

1004

Features:

Supplied with circlip for loosely fixing to materials up to 6.4mm thick. Dirt exit hole.

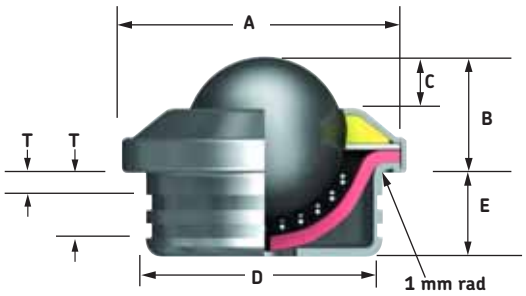



1007

Features:

Small taper on body allows for interference fixing. Do not strike the ball, use a tube on the flange diameter when fixing. Approx. size of taper is 35.8mm top and 35.4 bottom. Dirt exit hole.

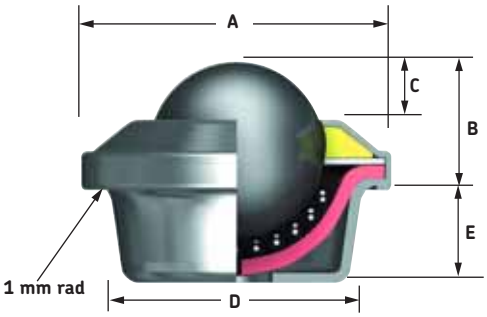



1500

Features:

High load capacity. Improved rubber knife edge seal wipes debris off outside the ball. Dirt exit hole.

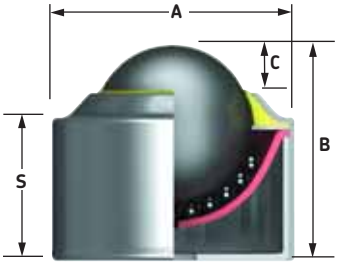

ref no.	ball size (mm)	weight (g)	dimensions (mm)*									maximum loading (lb)**							
			A	B	C	D	E	O	S	T	T	type 13 ball up	type 13 ball down	type 14 ball up	type 14 ball down	type 15 ball up	type 15 ball down	type 16 ball up	type 16 ball down
1004	25.4	140	45.2	18.4	7.9	34.9	12.7	36	_	3.2	6.4	121	55	55	22	121	55	121	55
1007	25.4	140	45.2	18.4	7.9	35.8	11.9	to suit	_	_	_	121	55	55	22	121	55	121	55
1500	25.4	160	39.5	35.8	6.1	_	_	to suit	22.8	_	_	110	110	55	22	110	110	110	110

* see key to dimensions, page 3
** see key to maximum loading, page 3
general tolerances unless stated ± 0.3mm

Fixing clips

SKF provides a complete range of fixing clips designed specially for use with their ball transfer units.

They lock the unit securely in position without the need for special tools or machinery.

Some standard clips are described here.

Special designs can also be provided, please ask for details.

The effectiveness and security of ball units attached by means of fixing clips can be influenced by size of fixing holes, table thickness and ball unit tolerances.

Fixing clip dimensions available on request.

CL11



Available in three sizes only to suit ball units with body diameters of 36mm, 45mm and 62mm.

Fitting CL12 and CL14 fixing clips

When fitting ball units with CL12 or CL14 fixing clips, do not strike the load ball to press the unit into position.

Instead, apply an even force onto the ball unit's body using a tube or similar tool.

CL12 (made to order)



This clip will fit under the flange of any of our ball units that have parallel sides. If any particular size of clip is not in stock there may be a minimum order charge. Fixing hole sizes on application.

On certain units it is possible to machine a recess to retain the clip in the body of the ball unit. These units must have a solid steel body, are not stock items and are only manufactured to specific orders.

CL13



These are to be used with ball units with a body diameter of 24mm only.

CL14



Stocked for body diameter of 24mm, 36mm, 45mm and 62mm. This clip was designed for fixing ball units from the top face of a ball platform. The clip can also be used for fixing the ball unit from underneath the ball platform if clip CL11 is not suitable. Table top material thicknesses available on request.

CL14 fixing clips must be placed into the seating hole first, before the ball unit is fitted.

CL15 (made to order)



A circlip type clip used mainly for solid machined body units. The circlip is fitted from underneath the ball unit and is available in many sizes.

Ball units with circlip grooves are not stock items. The standard circlip is self color spring steel, but plated circlips can be offered where corrosion resistance is required.

ref no.	to be used with ball units:						
	(page 11)	(pages 14-15)	(pages 16-19)	(pages 20-23)	(pages 24-25)	(pages 26-27)	(pages 28-29)
CL11 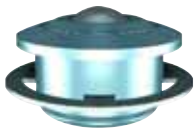		522-0, 4 & 6 530-0, 4 & 6 545-0, 4 & 6	6025-4 available on request			800-22, 810-22 800-30, 810-30 800-45, 810-45 805-30 805-45	
CL12 	1007	515-0, 4 & 6 522-0, 4 & 6 530-0, 4 & 6 545-0, 4 & 6	6025-2 6025-4	7104 7124 7125 7152 7171	0519-22 3019-22 1019-22 1029-22 2019-22	810-15 800-22, 810-22 800-30, 810-30 800-45, 810-45 800-60 805-30 805-45	3010, 1027 3011, 1028 1017, 2009 1018, 2010 1509, 4007 1507, 4008
CL13 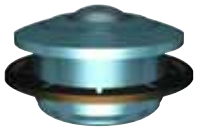		515-0, 4 & 6				810-15	
CL14 		515-0, 4 & 6 522-0, 4 & 6 530-0, 4 & 6 545-0, 4 & 6		7104 7124	810-15 800-22, 810-22	800-30, 810-30 800-45, 810-45 805-30 805-45	1018 1017 1507 1509
CL15 	1004					810-15 800-22, 810-22 800-30, 810-30 800-45, 810-45 800-60 805-30 805-45	3011, 1027 3010, 1028 1018, 2009 1017, 2010 1507, 4007 1509, 4008

Tee blocks, die tables

Tee blocks

Single minute tool and die changing

Our comprehensive range of tee blocks and spring loaded ball transfer units, set into the bed of your power press or machine tool, will allow effortless positioning of tooling but still allow rigid clamping.

We supply tee blocks for both standard and non-standard tee slots the length, pitch, ball height etc. being dependent on tool weight and profile.

Other sizes available on request.

Tee blocks can be designed and manufactured to suit particular applications. See page 23 for our range of Die-lifter ball units.

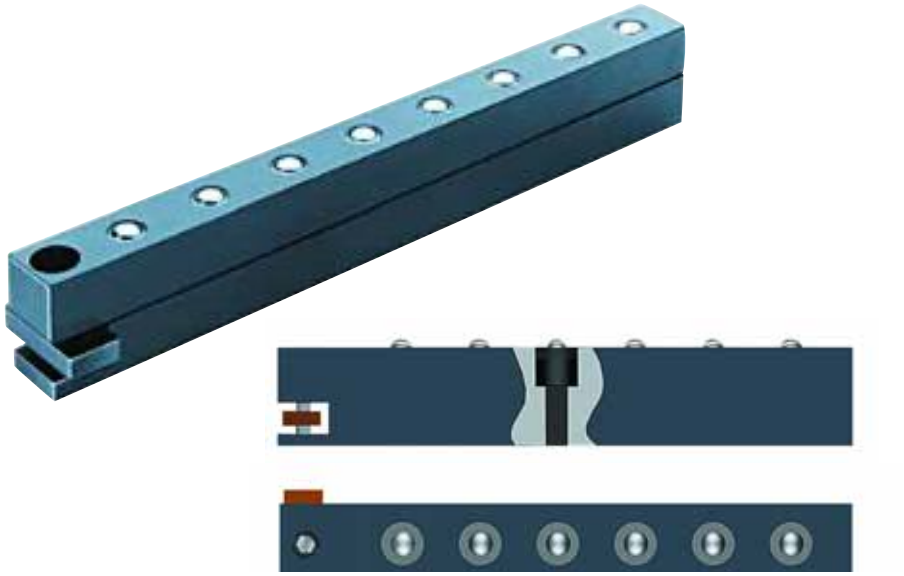

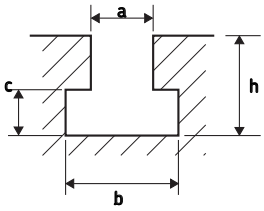

DIN 650

a	b	c	h
22	37	16	38
24	42	18	42
28	46	20	48
36	56	25	61

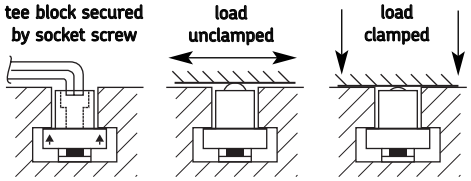

Quick change die tables

For all types of molding and stamping applications.

They allow quick, easy tool changing with storage close to the machine.

All tables are fully guarded. Access to the machine via a lift-up gate if required.

Custom designed to your specific requirements, installation is carried out by our engineers.

NOTE – safety rails should be fitted where there is the possibility of loads rolling off.







Heavy-duty turntables

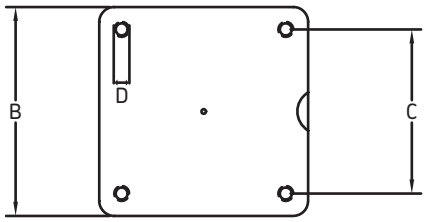

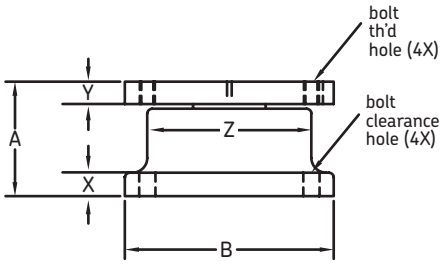

Ideal for welding, industrial worktables, and many other "Lazy Susan" type applications. Units available in ductile iron and stainless steel, with lockable feature optional. All bearings in these units are greased and sealed for life. Turntables are engineered for safe, smooth, long-lasting operation.

Part number	Moment load (inch/lbs)	load capacity (lbs)	height A	length B	center C	mt'g bolt size D	height X	height Y	length Z
Standard or lockable									
UT 01 CN or UT 01 CL	650	1,000	1.77"	3.25"	2.50"	1/4"-20	0.39	0.38	2.25
UT 02 CN or UT 02 CL	1,400	2,500	1.92"	3.50"	2.75"	1/4"-20	0.39	0.38	2.75
UT 05 CN or UT 05 CL	3,700	5,000	2.43"	5.00"	4.00"	3/8"-16	0.50	0.50	3.75
UT 10 CN or UT 10 CL	8,500	10,000	2.72"	6.50"	5.50"	3/8"-16	0.50	0.50	5.00
UT 25 CN or UT 25 CL	24,000	25,000	2.95"	7.25"	5.75"	1/2"-13	0.63	0.63	6.00
Stainless or lockable									
UT 02 SN or UT 02 SL	1,400	2,500	1.92"	3.50"	2.75"	1/4"-20	0.39	0.38	2.75
UT 05 SN or UT 05 SL	3,700	5,000	2.43"	5.00"	4.00"	3/8"-16	0.50	0.50	3.75

Ball transfers

Three or more SKF heavy load ball transfers may be equally spaced under the work table which is mounted on the turntable upper plate. These units will then allow greater overhung loads and also greater carrying capacity.

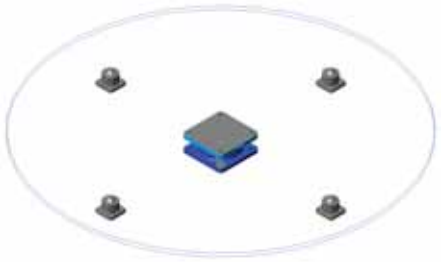

Heavy load ball transfer – turntable units

Threaded heavy load ball transfers are stud mounted for easy adjustment of the overall unit height.

These units also feature a recirculating ball path for high load carrying capacity. Three units or more is recommended in turntable applications.

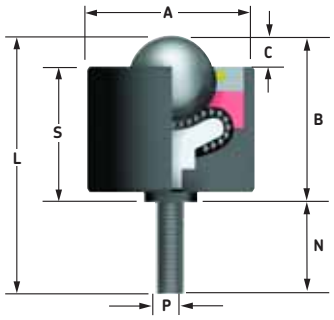

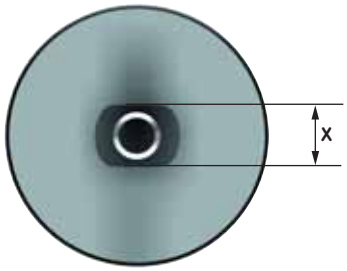

part no.	ball size (mm)	dimensions (mm)* A	B	C	L	N	S	P	X	load capacity (lb) type 13	type 15	turntable series
7131-S736	25.4	50.8	42	6.1	102	60	35.9	1" UNF	44	705	474	UT 01 & UT 02
7154-S737	38.1	60.3	60	13	135	75	47	1" UNF	44	2204	1477	UT 05, UT 10 & UT 25

Type 13 = carbon steel unit. Type 15 = stainless steel unit. ***Please specify type when ordering***

SKF selecting and spacing

Fax to: 610-861-3737
Attn: Engineering
Questions: Call 1-800-541-3624

Name: _____

Company name: _____

Phone and fax: _____

1. Ball up or ball down?

One of the most basic questions is, will the application be ball up or ball down? (select one)

Ball Up 

Ball Down 

2. How do you intend to mount or fasten the ball transfer? (select one)






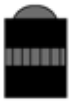

3. Determine the required spacing & load rating

Enter mass (lbs) of conveyed article _____(lbs)

Divide (lbs) by 3 _____(lbs)
(this safely provides the maximum load a single unit will bear)

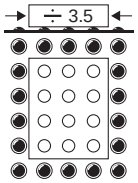

Enter smallest dimension (length or width) of the article to be conveyed _____(mm)

Divide (mm) by a 3.5 _____(mm)
(This provides the ball center distances to ensure 3 units are always in contact with the article)

4. Contamination, debris and environmental concerns

Please describe the application & environment. Be sure to include potential shock loads, possible deflections, material requirements, possible contaminants, material being conveyed and environmental concerns.

_____

_____

_____

_____

_____

_____

_____

SKF USA Inc.
1530 Valley Center Parkway
Bethlehem, PA 18017
800-541-3624
www.linearmotion.skf.com



® SKF is a registered trademark of SKF USA Inc.
The contents of this publication are the copyright of the publisher and may not be reproduced (even extracts) unless prior written permission is granted.
Every care has been taken to ensure the accuracy of the information contained in this publication but no liability can be accepted for any loss or damage whether direct, indirect or consequential arising out of use of the information contained herein.

© 2003 SKF USA Inc.

Printed in USA

Publication 940-711 (5M/AN 12/2006) Version 12/2006