Industrial shaft seals



SI conversion table

Quantity	Unit	Conversion			
Length	inch	1 mm	0.039 in.	1 in.	25,40 mm
	foot	1 m	3.281 ft.	1 ft.	0,3048 m
	yard	1 m	1.094 yd.	1 yd.	0,9144 m
	mile	1 km	0.6214 mile	1 mile	1,609 km
Velocity, speed	foot per second	1 m/s	3.28 ft/s	1 ft/s	0,30480 m/s
	foot per minute	1 m/s	196.8504 ft/min	1 ft/min	0,00508 m/s
	mile per hour	1 km/h	0.6214 mile/h (mph)	1 mile/h (mph)	1,609 km/h
Force	pound-force	1 N	0.225 lbf.	1 lbf.	4,4482 N
Pressure, stress	pounds per square inch	1 MPa	145 psi	1 psi	$6{,}8948 \times 10^3$ Pa
Temperature	° (degree)	Celsius	$t_C = 0{,}555\ (t_F - 32)$	Fahrenheit	$t_F = 1{,}8\ t_C + 32$

® SKF, DURATEMP, SPEEDI-SLEEVE and WAVE are registered trademarks of the SKF Group.

© SKF Group 2013
The contents of this publication are the copyright of the publisher and may not be reproduced (even extracts) unless prior written permission is granted. Every care has been taken to ensure the accuracy of the information contained in this publication but no liability can be accepted for any loss or damage whether direct, indirect or consequential arising out of the use of the information contained herein.

The data in this publication may differ from that provided in earlier publications because of redesign, technological developments or revised methods of calculation. SKF reserves the right to make continuing improvements to SKF products without prior notice with respect to materials, design and manufacturing methods, as well as changes necessitated by technological developments.

PUB SE/P1 10919/2 EN · June 2013

This publication supersedes publication 5300.

SKF

1 Product data – general 11
2 Radial shaft seals 47
3 Cassette seals 321
4 Wear sleeves 327
5 Track pin seals 373
6 Metal face seals 379
7 V-ring seals 389
8 Axial clamp seals 471
9 Product index 482

This is SKF

From one simple but inspired solution to a misalignment problem in a textile mill in Sweden, and fifteen employees in 1907, SKF has grown to become a global industrial knowledge leader. Over the years we have built on our expertise in bearings, extending it to seals, mechatronics, services and lubrication systems. Our knowledge network includes 46 000 employees, 15 000 distributor partners, offices in more than 130 countries, and a growing number of SKF Solution Factory sites around the world.



Research and development

We have hands-on experience in over forty industries, based on our employees' knowledge of real life conditions. In addition our world-leading experts and university partners who pioneer advanced theoretical research and development in areas including tribology, condition monitoring, asset management and bearing life theory. Our ongoing commitment to research and development helps us keep our customers at the forefront of their industries.



SKF Solution Factory makes SKF knowledge and manufacturing expertise available locally, to provide unique solutions and services to our customers.

Meeting the toughest challenges

Our network of knowledge and experience along with our understanding of how our core technologies can be combined helps us create innovative solutions that meet the toughest of challenges. We work closely with our customers throughout the asset life cycle, helping them to profitably and responsibly grow their businesses.



Working for a sustainable future

Since 2005, SKF has worked to reduce the negative environmental impact from our own operations and those of our suppliers. Our continuing technology development introduced the SKF BeyondZero portfolio of products and services which improve efficiency and reduce energy losses, as well as enable new technologies harnessing wind, solar and ocean power. This combined approach helps reduce the environmental impact both in our own operations and in our customers'.



Working with SKF IT and logistics systems and application experts, SKF Authorized Distributors deliver a valuable mix of product and application knowledge to customers worldwide.

SKF – the knowledge engineering company

Our knowledge – your success

SKF Life Cycle Management is how we combine our technology platforms and advanced services, and apply them at each stage of the asset life cycle, to help our customers to be more successful, sustainable and profitable.

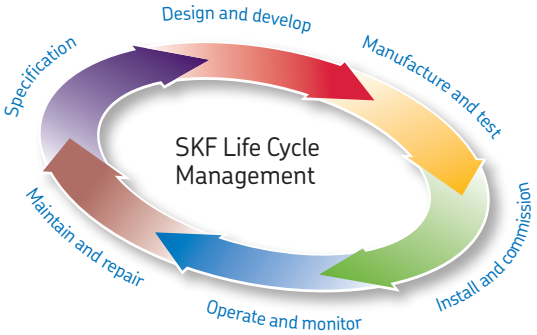

Working closely with you

Our objective is to help our customers improve productivity, minimize maintenance, achieve higher energy and resource efficiency, and optimize designs for long service life and reliability.

Innovative solutions

Whether the application is linear or rotary or a combination of the two, SKF engineers can work with you at each stage of the asset life cycle to improve machine performance by looking at the entire application. This approach doesn't just focus on individual components like bearings or seals. It looks at the whole application to see how each component interacts with the next.

Design optimization and verification

SKF can work with you to optimize current or new designs with proprietary 3-D modeling software that can also be used as a virtual test rig to confirm the integrity of the design.



Bearings
SKF is the world leader in the design, development and manufacture of high performance rolling bearings, plain bearings, bearing units and housings.



Machinery maintenance
Condition monitoring technologies and maintenance services from SKF can help minimize unplanned downtime, improve operational efficiency and reduce maintenance costs.



Sealing solutions
SKF offers standard seals and custom engineered sealing solutions to increase uptime, improve machine reliability, reduce friction and power losses, and extend lubricant life.



Mechatronics
SKF fly-by-wire systems for aircraft and drive-by-wire systems for off-road, agricultural and forklift applications replace heavy, grease or oil consuming mechanical and hydraulic systems.



Lubrication solutions
From specialized lubricants to state-of-the-art lubrication systems and lubrication management services, lubrication solutions from SKF can help to reduce lubrication related downtime and lubricant consumption.



Actuation and motion control
With a wide assortment of products – from actuators and ball screws to profile rail guides – SKF can work with you to solve your most pressing linear system challenges.

Contents

This is SKF **2**

SKF – the knowledge engineering company **4**

Foreword **9**
SKF industrial shaft seals and accessories 10

1 Product data – general **11**

Industrial shaft seals **12**
Profile overview selection 13
Radial shaft seals 13
Wear sleeves 15
Axial shaft seals 16
Selection of seal design and material . . . 17
Grease retention 17
Oil retention 18
Contaminant exclusion 19
Retention and exclusion 20
Separating two liquids 21
Circumferential and rotational speed 22
Pressure differentials 23
Limited space 24
Installation restrictions 25
Arrangement 26
Counterface design 27
Axial movement 28
Seal materials 29
Cases and inserts 29
Garter springs 29
SKF Bore Tite Coating 29
Adhesives and bonding agents 29
Sealing lip materials 30
Wear resistance 33
Operating temperatures 34
Chemical resistance 35
Storage and handling of seals 44
General 44
Storage 44
Cleaning and maintenance 45

2 Radial shaft seals **47**
General 50
Outside diameter design 54
SKF Bore Tite Coating 54
Garter springs 55
Dimensions 55
Tolerances 55
Sealing lip design 57
Auxiliary lips 58
Coaxiality and runout 59
Coaxiality 59
Runout 61
Axial movement 63
Permissible speeds 63
Lubrication 65
Lubrication of paired arrangements . . 65
Friction 66
Chemical and thermal resistance 67
Seals under pressure 69
Shaft requirements 70
General 70
Tolerances 70
Surface roughness 70
Surface finish 72
Hardness and surface treatment 72
Lead-in chamfers 72
Housing bore requirements 74
General 74
Metal-reinforced seals 74
Seals without metal-reinforcement . . . 74
Tolerances 76
Surface roughness 76
Seal installation, general industrial applications 77
General 77
Seal installation, heavy industrial applications 79
Metal-reinforced seals 79
Seals without metal reinforcement . . . 80
Split seals 80
Cover plates 82
Multiple HS seal installations 83
Multiple HDS seal installations 84
PTFE seals 85
Protecting the counterface surface against corrosion 87
Removal 87
Replacement 87
Designation system 88
Metric radial shaft seals 88
Inch-size radial shaft seals 88
Assortment and availability 88
Seals for general industrial applications 92
HMS5 and HMSA10 seals 92
CRW1, CRWA1, CRWH1 and CRWHA1 seals 104
CRW5 and CRWA5 seals 160
HDW1 seals 164
CRS1, CRSH1, CRSA1 and CRSHA1 seals 168
PTFE radial shaft seals 174
HM and TL seals for grease lubricated applications 178
X seals, sealing against housing bore 192
Seals for heavy industrial applications 202
General 202
Metal-cased seals 202
Rubber outside diameter seals 207
Additional design features 211
Size options of metal-cased HDS seals and all-rubber HS seals 215
Product tables 217

3 Cassette seals **321**
General 322
Design features 323
Testing 323
Installation 323
SKF Mudblock seal designs MUD5 and MUD7 324

4 Wear sleeves **327**
General 328
SKF Speedi-Sleeve 329
Features 329
Size range 329
SKF Speedi-Sleeve Gold 330
Test results 330
Selecting the right size 330
Installing SKF Speedi-Sleeve 331
Removing SKF Speedi-Sleeve 333
Product tables 334
Wear sleeves for heavy industrial applications (LDSLV) 356
General 356
Designs and features 357
Using LDSLV designs 358
Installation 358
Removal 358
Product tables 360

5 Track pin seals 373
General 374
Features and benefits 374
Product tables 376

6 Metal face seals 379
General 380
Design features 380
Lubricant requirements 381
Permissible operating conditions 382
Contaminants 382
Installing HDDF seals 382
General 382
Housing and seal preparation 382
Installation procedure 383
Product tables 384

7 V-ring seals 389
General 390
Features 390
Materials 391
Standard designs 392
Main V-ring functions 393
Other V-ring functions 394
Sliding velocities 395
Coaxiality and runout 396
Misalignment 396
Counterface 397
Counterface treatment 397
Additional counterface information . . . 397
Product table sorting order 398
Shaft requirements 399
Installing V-rings 399
Product tables 400
MVR axial shaft seals 464
General 464
Advantages and user benefits 464
Design and material 464
Temperature range 464
Sizes 464
Installation 465
Product tables 466

8 Axial clamp seals 471
General 472
Designs 472
Design of the sealing arrangement 473
Installation instructions 474
Product tables 476

9 Product index 482

Foreword

This edition of the Industrial shaft seals catalogue supersedes the one published in 2006 (publication number 5300). For this new edition, numerous revisions, additions and enhancements have been made to provide an even more comprehensive guide. Though the aim of this catalogue is to cover a very wide seal assortment, it still only includes a selection of our complete assortment of shaft seals and accessories.

The data in this catalogue may differ from that provided in earlier catalogues because of redesign, technological developments or revised methods of calculation. SKF reserves the right to make continuing improvements to SKF products without prior notice with respect to materials, design and manufacturing methods, as well as changes necessitated by technological developments.

Catalogue overview

In order to emphasize the importance of studying the operating conditions of each application before selecting a sealing solution, this catalogue outlines the most important factors to consider. These are provided in the chapter *Product data – general*, along with basic shaft and housing bore requirements.

SKF industrial shaft seals and accessories are divided into three main groups: radial shaft seals, axial shaft seals and wear sleeves. Different seal types within these groups are described with their respective design, materials and applications.

Product descriptions are followed by product tables. It should be noted, however, that these tables only cover a selection of available sizes. Always contact your SKF sales representative for complete and updated availability information.

The SKF Interactive Engineering Catalogue

SKF provides this catalogue in electronic format, the SKF *Interactive Engineering Catalogue*, online at www.skf.com.

Units

The units in this catalogue are in accordance with ISO (International Organization for Standardization) standard 1000:1992, and SI (Système International d'Unités).

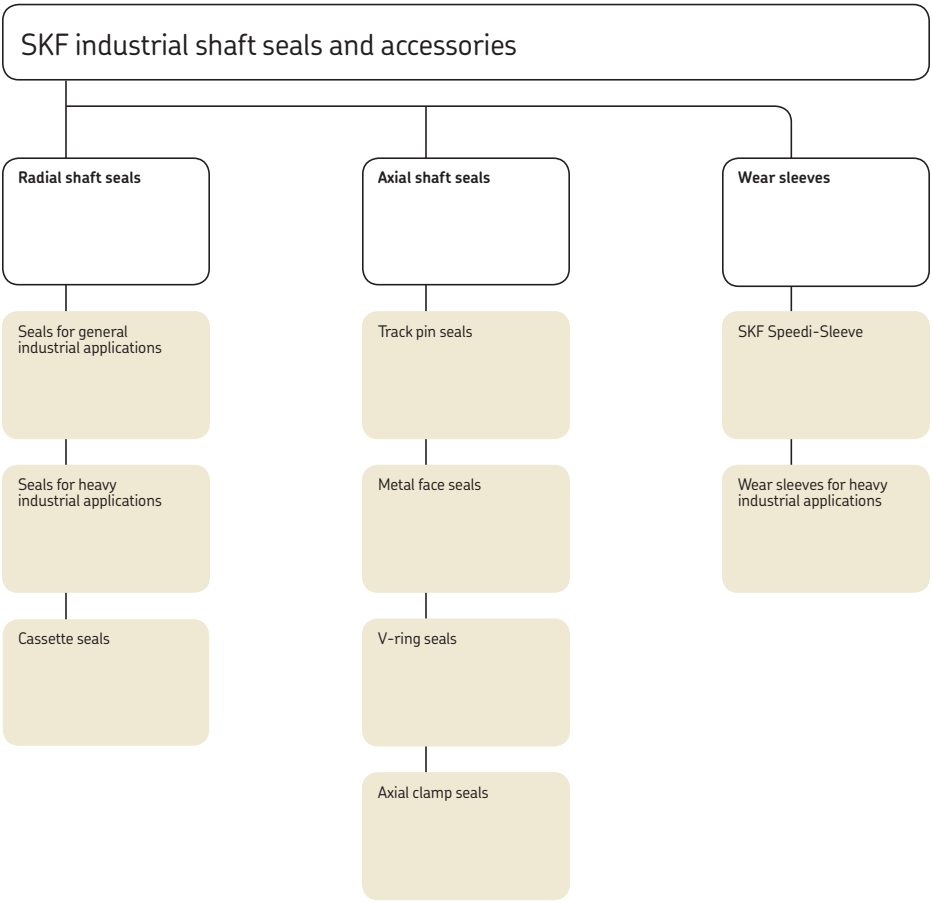
SKF industrial shaft seals and accessories
Radial shaft seals
Seals for general industrial applications
Seals for heavy industrial applications
Cassette seals
Axial shaft seals
Track pin seals
Metal face seals
V-ring seals
Axial clamp seals
Wear sleeves
SKF Speedi-Sleeve
Wear sleeves for heavy industrial applications

Product data – general

Industrial shaft seals **12**

Profile overview selection **13**
Radial shaft seals 13
Wear sleeves 15
Axial shaft seals 16

Selection of seal design and material **17**
Grease retention 17
Oil retention 18
Contaminant exclusion 19
Retention and exclusion 20
Separating two liquids 21
Circumferential and rotational speed 22
Pressure differentials 23
Limited space 24
Installation restrictions 25
Arrangement 26
Counterface design 27
Axial movement 28

Seal materials **29**
Cases and inserts 29
Garter springs 29
SKF Bore Tite Coating 29
Adhesives and bonding agents 29
Sealing lip materials 30

Wear resistance **33**

Operating temperatures **34**

Chemical resistance **35**

Storage and handling of seals **44**
General 44
Storage 44
Cleaning and maintenance 45

Industrial shaft seals

Industrial shaft seals are used to seal the opening between a rotating and a stationary component, or between two components in relative motion. Primary seal functions include:

- Retain the lubricant
- Exclude contaminants
- Separate two different media
- Seal under pressure

To be effective, industrial shaft seals should operate with a minimum of friction and wear, even under unfavourable operating conditions. In order to meet the requirements of a variety of different applications and operating conditions, SKF industrial shaft seals for rotating machine components are manufactured from many different designs, materials and executions. Each of these designs and material combinations has specific properties, making them suitable for a particular application. The main groups of shaft seals and accessories are:

Radial shaft seals

- Seals for general industrial applications
- Seals for heavy industrial applications
- Cassette seals

Axial shaft seals

- Track pin seals
- Metal face seals
- V-ring seals
- Axial clamp seals

Wear sleeves

- SKF Speedi-Sleeve
- Wear sleeves for heavy industrial applications

Availability

The SKF assortment of industrial shaft seals comprises hundreds of different designs and material combinations. The products shown in this catalogue and listed in the product tables are the more commonly used seal types and sizes.

Guidance values

Since several factors simultaneously affect the sealing system and seal performance, all stated values in graphs and tables in this publication should be considered as guidelines only and not as absolute values for practical applications.

Profile overview selection

Radial shaft seals

Seals for general industrial applications, elastomeric sealing lip(s)

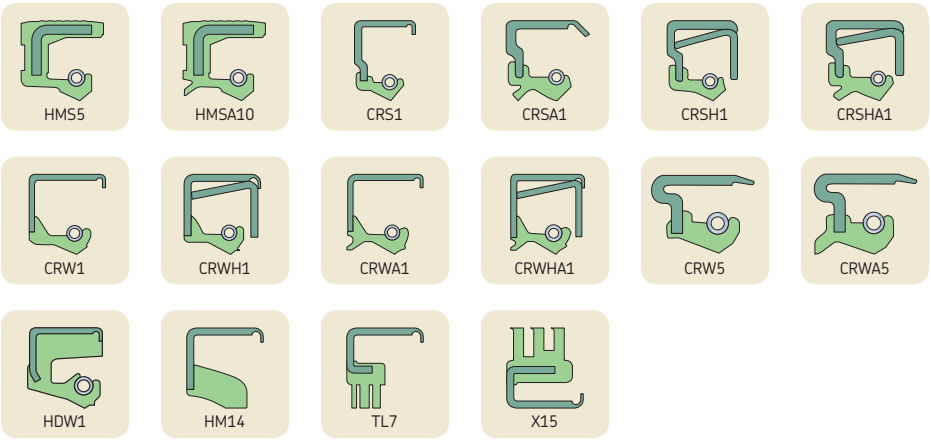

Seals for general industrial applications, PTFE sealing lip(s)

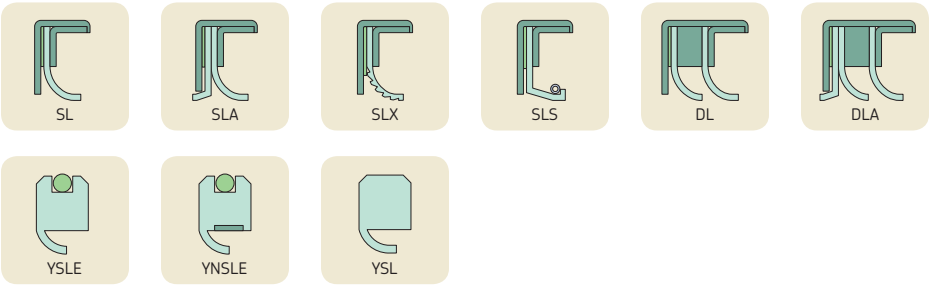

Seals for heavy industrial applications

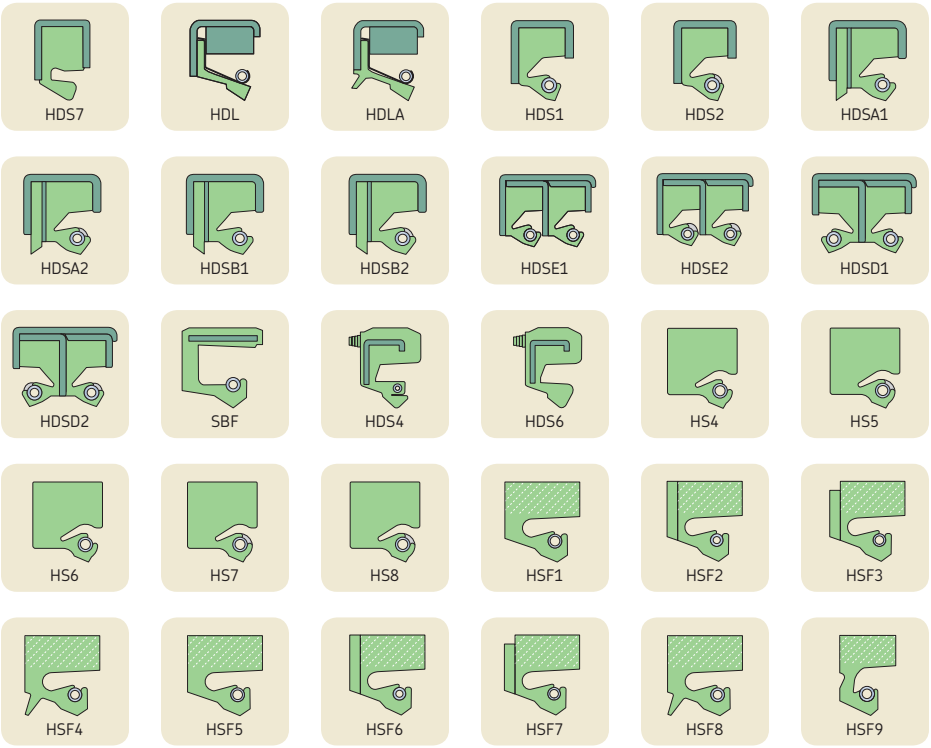

Cassette seals, SKF Mudblock

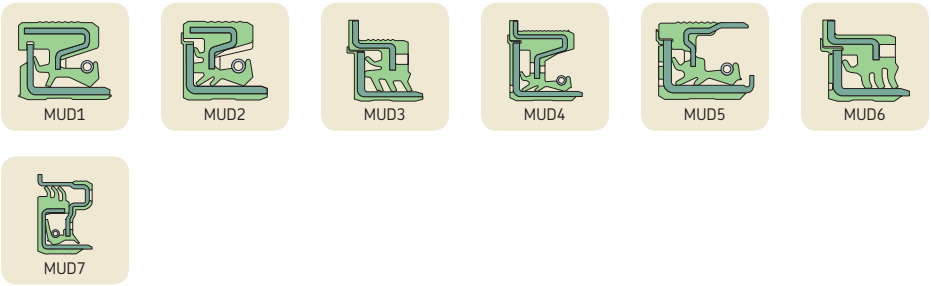

Wear sleeves

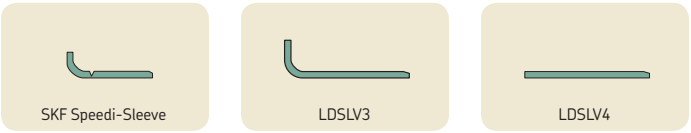

Axial shaft seals

Track pin seals, SKF Trackstar

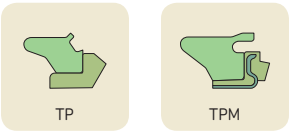

Metal face seals

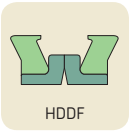

V-ring seals

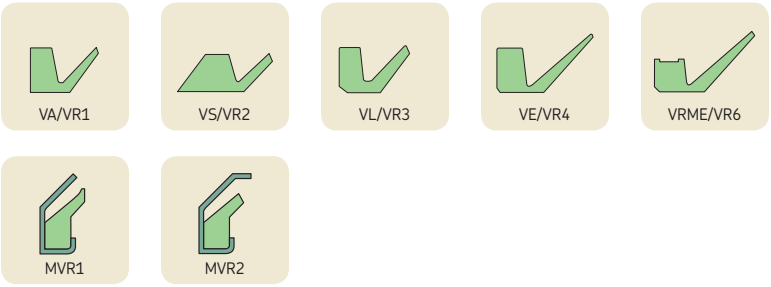

Axial clamp seals

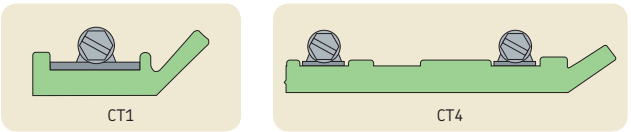

Fig. 1

V-ring

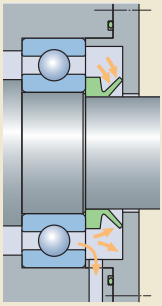

Fig. 2

HMS5 seal

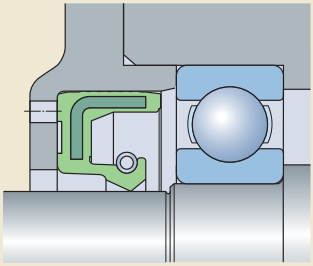

Fig. 3

CRW1 seal

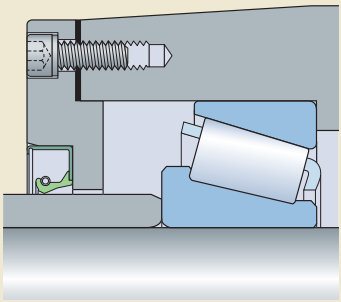

Selection of seal design and material

Selecting an appropriate seal design and material depends on the operating conditions of the application such as:

- temperature
- speed
- pressure differential
- type of lubricant
- vertical or horizontal orientation
- runout and shaft-to-bore misalignment

Because the influence of one operating condition typically dominates the seal selection process, there are no universal rules for determining the appropriate seal type or design for a given application. This section describes how operating conditions affect seal performance and service life and provides guidance on selecting the most appropriate seal for a given application.

Matrix 1 and **2** on **pages 90** to **91** and **198** to **201** list the standard SKF radial shaft seals and their main features and permissible operating conditions.

Grease retention

Greases have a relatively high viscosity and are relatively easy to retain in a bearing arrangement. In many grease lubricated applications, a non-spring-loaded sealing lip design or a V-ring can adequately retain the grease (→ **fig. 1**).

However, more demanding applications may require HMS5 or CRW1 spring-loaded radial shaft seals (→ **figs. 2** and **3**).

When frequent relubrication is required, the lip of at least one of the seals in the sealing arrangement should be directed toward the air side so that excess grease can escape via the sealing lip (→ **fig. 3**). This avoids grease build-up, which can retain heat and limit heat dissipation. For grease lubricated applications, SKF recommends calculating the permissible circumferential speed for oil and halving the result.

Fig. 4

HMS5 seal

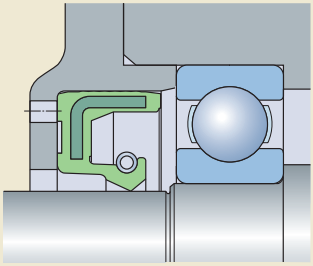

Fig. 5

CRW1 seal

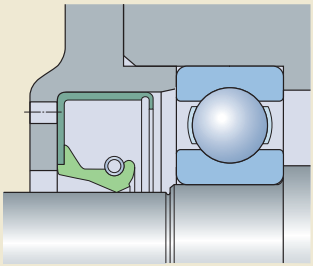

Oil retention

Lubricating oils, particularly relatively low-viscosity oils, are much more difficult to retain than greases. Therefore, HMS5 or CRW1 spring-loaded radial shaft seals (→ **figs. 4** and **5**) are recommended in order to achieve the necessary radial load and resistance to dynamic runout and shaft-to-bore misalignment for a satisfactory sealing performance.

Standard HMS5 seals have a straight lip while CRW1 seals are designed with SKF Wave lips to provide improved pumping ability, regardless of the direction of shaft rotation (→ **fig. 6** on **page 57**). Another way of increasing a seal's pumping ability is to add a helix pattern, i.e. hydrodynamic features, to the sealing lip design.

The rubber outside diameter, like the one found on HMS5 seals, helps compensate for small imperfections in the housing bore surface and is therefore recommended when the required housing bore surface is questionable.

For very tough operating conditions, where circumferential speeds are relatively low, metal face seals, like the HDDF seal (→ **fig. 6**), can be used for both oil or grease retention.

V-rings (→ **fig. 7**) may also be used to retain oil, provided they are installed on the oil side and supported axially on the shaft.

Fig. 6

HDDF metal face seal

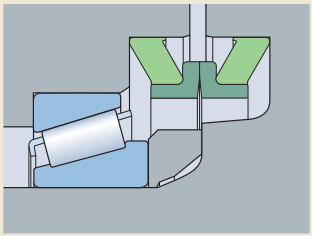

Fig. 7

V-ring

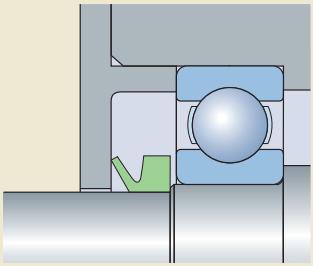

Fig. 8

CRW1 seal

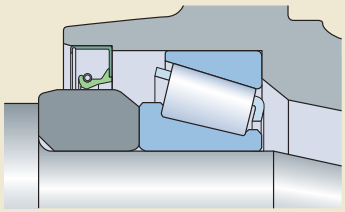

Fig. 9

CRW1 seals in tandem

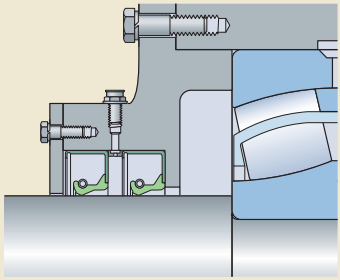

Contaminant exclusion

Radial shaft seals that are primarily used for contaminant exclusion should be installed with the lip pointing outward. When additional protection is needed, SKF recommends a seal design that incorporates an auxiliary lip, for example the HMSA10 or CRWA1 seals.

For tough operating conditions, SKF Wave seals (→ **fig. 8**) with hydrodynamic features are recommended. To further enhance sealing efficiency, two single-lip seals can be arranged in tandem (→ **fig. 9**) or a double-lip seal, like the HDSE1 seal, can be used (→ **fig. 10**).

V-rings (→ **fig. 11**) are used primarily to exclude contaminants. These seals, which act as flingers, rotate with the shaft and seal against a surface that is perpendicular to the shaft.

V-rings and axial clamp seals are often used as secondary seals to protect the primary seals from coarse contaminants.

None of these seal arrangements are intended for oil retention.

Fig. 10

HDSE1 seal

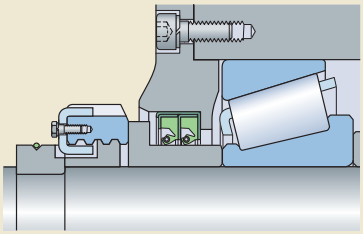

Fig. 11

V-ring

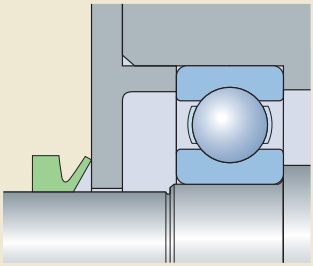

Fig. 12

HMSA10 seal

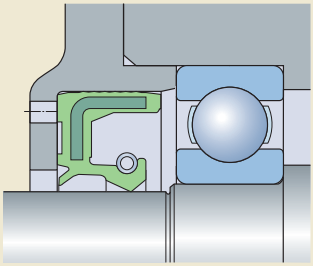

Retention and exclusion

In many applications, the exclusion of contaminants is just as important as lubricant retention. Seals with an auxiliary lip, like the HMSA10 seals (→ **fig. 12**), are appropriate for these applications.

Another option is to use two seals installed in opposite directions (→ **figs. 13** and **14**) or two opposing V-rings (→ **fig. 15**) with a spacing washer.

Under extremely tough operating conditions, SKF recommends using HDDF metal face seals (→ **fig. 6** on **page 18**), provided that the sliding velocity of the mating surfaces lies within the permissible range.

Fig. 13

Two seals in opposite direction

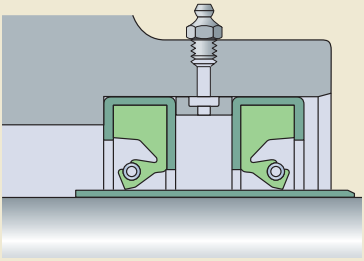

Fig. 14

Two seals in opposite direction

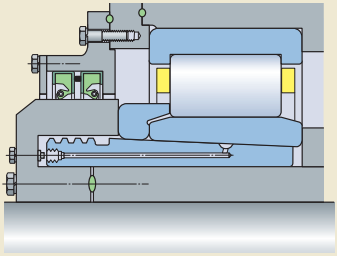

Fig. 15

V-ring

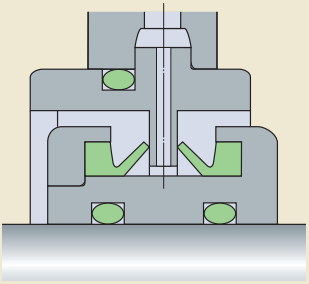

Fig. 16

CRW1 seals

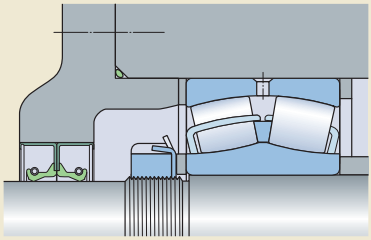

Fig. 17

HMS5 seals

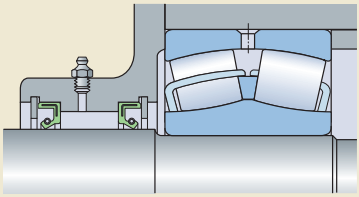

Fig. 18

HDSD1 seal

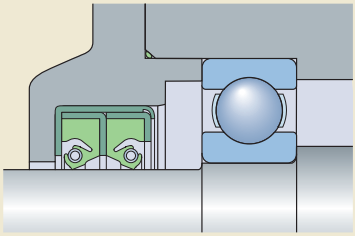

Separating two liquids

When an application has to keep two liquids from coming into contact with each other, there are two suitable solutions. These solutions, which depend on the availability of space and required efficiency, include:

- the use of two separate seals (→ **figs. 16** and **17**), positioned with their lips facing in opposite directions
- the use of HDSD1 double-lip seals (→ **fig. 18**)

In both alternatives, the sealing lips must be spring-loaded. When using an HDSD seal, it is very important to provide a means to lubricate the sealing lips, i.e. the cavity between the sealing lips must be filled with grease prior to installation or during operation via lubrication holes drilled through the metal case into the cavity.

Circumferential and rotational speed

The permissible speed of a seal is determined by its design and sealing lip material as well as the material and condition of the shaft. All of these factors influence the heat generation at the seal counterface. Lubrication of the sealing lip and the characteristics of the lubricant also have a direct influence on heat generation because they have a direct impact on heat dissipation.

Diagram 1 compares the permissible circumferential speeds for various seal designs assuming normal seal operation, grease or oil retention and no pressure differential across the seal.

Diagram 1

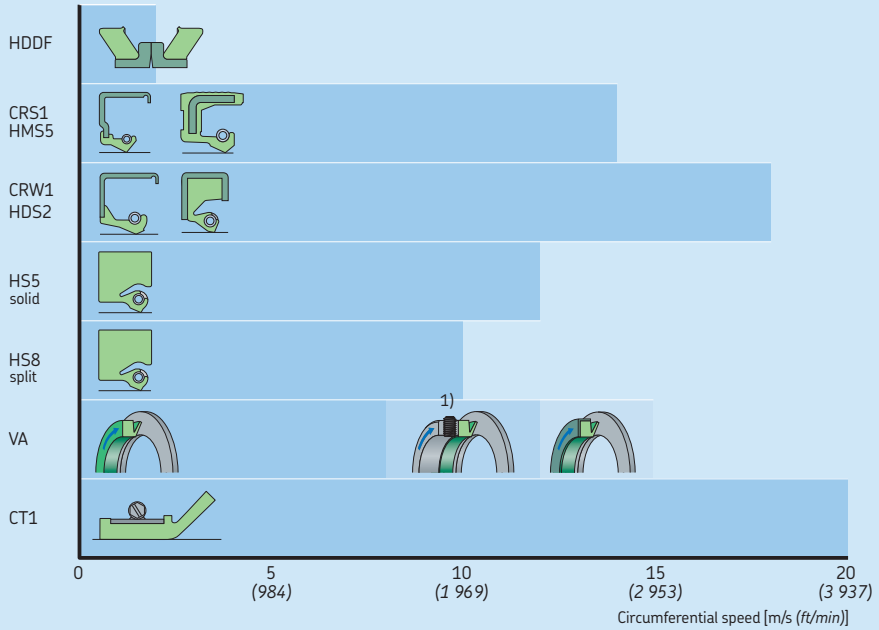

1) Support ring by customer

Fig. 19

CRWA5 seal

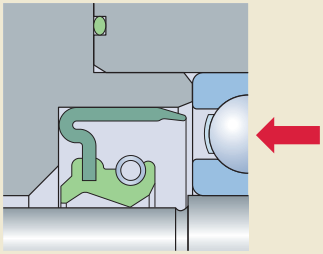

Pressure differentials

When subjected to a pressure differential, the seal must resist the additional radial load generated by the pressure. If the seal is not designed to resist the pressure, it will be forced against the shaft, increasing the radial load, underlip temperature, friction and wear of the seal and the counterface, resulting in shortened service life.

Standard seals are rated for no more than 0,07 MPa at 5 m/s *(10 psi at 1 000 ft/min)*, but SKF offers CRW5 and CRWA5 pressure profile seals that can accommodate 0,34 MPa at 5 m/s *(50 psi at 1 000 ft/min)*. Beyond 0,34 MPa *(50 psi)*, SKF offers a line of special order PTFE seals that can accommodate more than 3,5 MPa *(500 psi)*.

In applications with pressure differentials, shaft seals should be secured axially from the low-pressure side to prevent them from moving axially. This can be accomplished by installing the seal into a counterbore (→ **fig. 19**) or by using a retaining ring.

Fig. 20

Special seal design

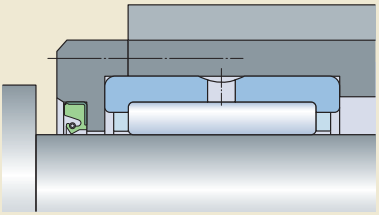

Limited space

In many cases, the available space is insufficient for a radial shaft seal having dimensions in accordance with ISO 6194-1 or DIN 3670. In these situations, special radial shaft seal designs must be used (→ **fig. 20**).

V-rings (→ **fig. 21**) are also suitable for applications with limited space because they can be positioned outside the actual seal position. V-rings seal axially by exerting light pressure against the counterface that can be a stationary or rotating machine component.

In applications with large shaft diameters, HS8 seals are an appropriate choice when space is limited (→ **fig. 22**).

Fig. 21

V-ring seal

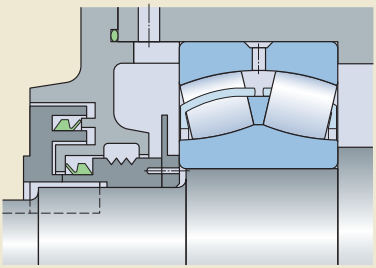

Fig. 22

HS8 seal

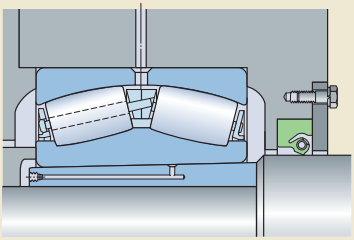

Fig. 23

V-ring seal

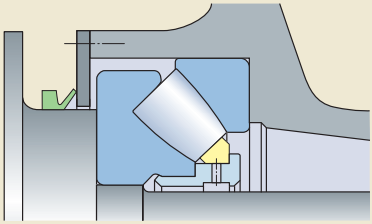

Fig. 24

V-ring seals

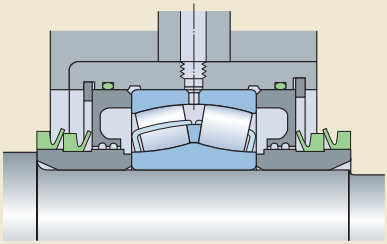

Installation restrictions

In applications where the seal cannot be installed via the shaft end, a V-ring or any of the split HSF or HS designs can be used (→ **pages 208** to **210**).

After being positioned on the shaft, HS and HSF seals are held together by a spring and spring connector. These seals should be retained axially in the housing bore by a one-piece or split cover plate.

Split HS radial shaft seals are suitable for circumferential speeds up to 7,5 or 10 m/s *(1 480 or 1 970 ft/min)*, depending on their design, and are available for shaft diameters up to approximately 4 570 mm *(180 in.)*.

Since V-rings are elastic, they can be stretched and are therefore easy to install, even in applications where they have to be passed over other components (→ **fig. 23**). However, in the event that replacing a V-ring would require the time consuming removal of several components, it is advantageous to install one or two replacement V-rings on the shaft from the outset (→ **fig. 24**). When the time comes to replace a worn V-ring, it can be cut and removed and the replacement V-ring can be pushed into position.

Fig. 25

V-ring seal

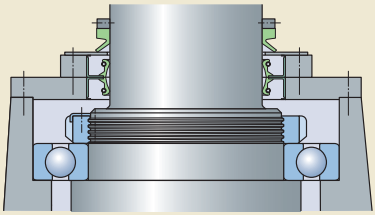

Fig. 26

V-ring seal

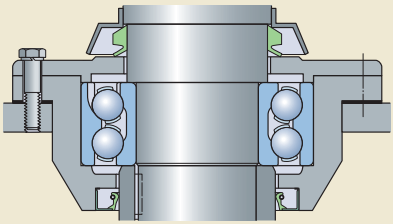

Arrangement

Seals installed on vertical shafts are usually more exposed to contaminants like rain water than seals on horizontal shafts. Oil retention is also more challenging for seals installed on vertical shafts. In general, however, all seals listed in the product tables are suitable for use on both horizontal and vertical shafts.

V-rings (→ **figs. 25** and **26**) have an interference fit on the shaft and rotate with it. They act as flingers and are therefore particularly suitable as both primary and secondary seals on vertical shafts. Highly efficient sealing arrangements, like those found in submersible pumps, can be achieved using radial shaft seals in tandem with a V-ring for additional protection against contaminants (→ **fig. 27**).

At relatively low speeds, HDDF metal face seals (→ **fig. 28**) effectively retain grease or oil and prevent the ingress of contaminants on vertical shafts.

Fig. 27

CRW5 seals + V-ring seal

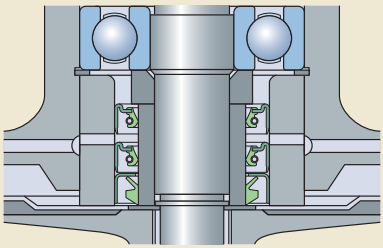

Fig. 28

HDDF metal face seal

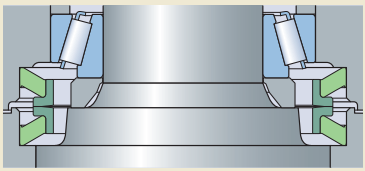

Counterface design

The service life and performance of a seal are largely influenced by:

- shaft material and hardness
- shaft surface finish and tolerance grade
- dynamic runout and shaft-to-bore misalignment

A shaft surface that is too smooth can lead to lubricant starvation, while a shaft surface that is too rough can accelerate sealing lip wear. The shaft surface should be machined without directionality as directionality can cause leakage depending on the direction of rotation. Dynamic runout and shaft-to-bore misalignment cause an uneven radial load on the circumference of the sealing lip. As a result, the sealing lip, particularly at high speeds, will not be able to follow the shaft. This, in turn, will result in a gap between the sealing lip and the shaft, causing reduced sealing ability.

Unlike radial shaft seals, V-rings and axial clamp seals are not affected by normal coaxiality deviations or runout.

Axial movement

Axial movement of the shaft relative to the housing bore does not detract from the sealing ability of radial shaft seals (→ **fig. 29**), provided that the total surface in contact with the lip has the same quality with respect to hardness and surface finish.

The amount of axial movement that can be accommodated by V-rings, axial clamp seals and HDDF seals is limited by the permissible displacement of the seal relative to its counterface.

Fig. 29

Axial movement

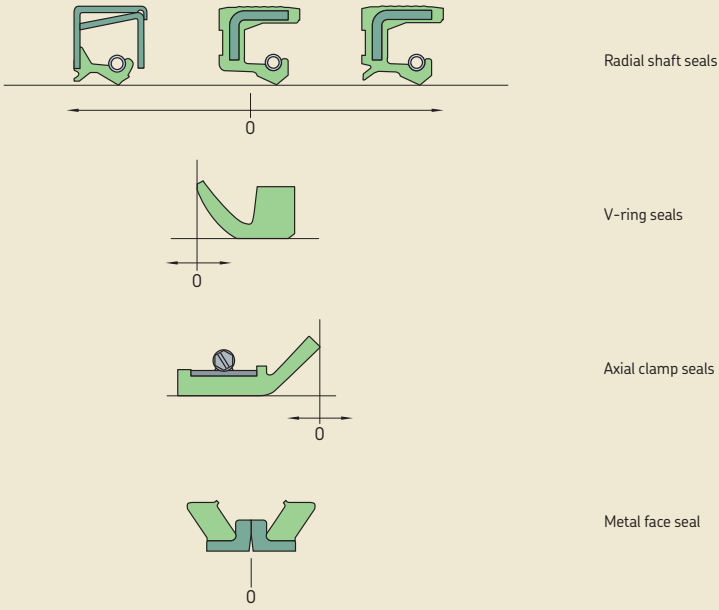

Seal materials

Cases and inserts

Metal cases and reinforcements for SKF radial shaft seals are manufactured standard from deep-drawn carbon sheet steel. The exposed surfaces are treated to protect them from corrosion during normal handling and storage.

SKF radial shaft seals that will be used in corrosive environments can also be designed with a stainless steel case on request.

Garter springs

The garter springs on SKF radial shaft seals are manufactured standard from cold-drawn steel wire. Exceptions are the metal-cased HDS seals, the all-rubber HS seals and the HMS5/HMSA10 seals made from fluoro rubber that are designed with stainless steel garter springs.

SKF Bore Tite Coating

SKF Bore Tite Coating is a water-based acrylic sealant available on most SKF metal-cased seals. The sealant is used as a coating on the outside diameter of the seal. SKF Bore Tite Coating is pliable with a thickness of 0,03 to 0,07 mm *(0.0012 to 0.0028 in.)* to compensate for small imperfections in the housing bore surface. The general guideline in Rubber Manufacturers Association (RMA) is, that if the bore surface texture is greater than 2,5 µm *(100 µin.)* R_a, a sealant should be used. This sealant can be used at temperatures up to 200 °C *(390 °F)* and is compatible with most oils, greases, aqueous acids and alkalis, alcohols and glycols. Please note that SKF Bore Tite Coating is not compatible with aromatics, ketones or esters. Contact with these substances will, however, have little or no effect if wiped off quickly.

Adhesives and bonding agents

Adhesives and bonding agents are used to achieve static sealing ability and satisfactory bonding between metal and elastomers in seal designs. Both of them can be solvent or water based depending on the metal and elastomer to be bonded.

Sealing lip materials

In addition to its design, the material of a sealing lip can have a significant impact on sealing performance and reliability. SKF, therefore, manufactures seals using a variety of sealing lip materials to meet the needs of different applications.

The sealing lips of SKF seals are generally made of elastomer materials. However, thermoplastics like polytetrafluoroethylene (PTFE) are gaining in importance. PTFE is mainly used for special seals intended for particular applications where improved thermal or chemical resistance is demanded.

SKF industrial shaft seals are generally manufactured from the materials listed in **table 1**. These materials have characteristics that make them particularly suitable for specific applications.

By changing the actual formulation and blending, it is possible to modify the characteristics of the elastomers relative to:

- resistance to swelling
- elasticity
- chemical resistance
- thermal resistance
- behaviour in the cold
- gas permeability

Details about the chemical resistance of sealing lip materials to various media encountered in operation are provided in the section *Chemical resistance*, **page 35**.

A code is used to identify the sealing lip material of SKF seals (→ **table 1**). The code also appears in the designations of metric radial shaft seals. For seals manufactured from a combination of materials, a combination of code letters is used, like RD (nitrile rubber and SKF Duralip).

Table 1

SKF sealing lip materials

Composition of basic material	Designation according to SKF	ISO 1629 ISO 1043-1 DIN 7728 Part 1	ASTM[1] D1418 ASTM D1600
Acrylonitrile-butadiene rubber (nitrile rubber)	R, RG	NBR	NBR
Hydrogenated acrylonitrile-butadiene rubber (SKF Duratemp)	H	HNBR	HNBR
Carboxylated nitrile rubber (SKF Duralip)	D	XNBR	XNBR
Polyacrylate elastomer	P	ACM	ACM
Silicone rubber	S	MVQ	VMQ
Fluoro rubber (SKF Duralife[2])	V	FPM	FKM
Polytetrafluoroethylene	T	PTFE	PTFE

[1] American Society for Testing and Materials
[2] Previously named *LongLife*

Nitrile rubber (R)

The term nitrile rubber is used in this publication for acrylonitrile-butadiene rubber (NBR). This material has very good engineering properties and is a general-purpose sealing lip material. It is a copolymer manufactured from acrylonitrile and butadiene that provides good resistance to the following media:

- Most mineral oils and greases with a mineral oil base
- Normal fuels like gasoline, diesel and light heating oils
- Animal and vegetable oils and fats and hot water

Nitrile rubber also tolerates short-term dry running of the sealing lip. The permissible operating temperature range of nitrile rubber is –40 to +100 °C *(–40 to +210 °F)*. For brief periods, temperatures of up to 120 °C *(250 °F)* can be tolerated.

SKF also offers a special nitrile rubber compound with a temperature range between –55 and +110 °C *(–65 and +230 °F)*.

SKF Duralip (D)

SKF Duralip is a carboxylated nitrile rubber (XNBR) developed by SKF that combines the good technical properties of nitrile rubber with an increased resistance to wear (→ **diagram 2** on **page 33**). It is mainly used for seals for heavy industrial applications. Seals made of this material should be chosen when abrasive contaminants like sand, soil and scale could reach the seal counterface on the shaft.

SKF Duratemp (H)

SKF Duratemp is a hydrogenated nitrile rubber (HNBR) developed by SKF that combines the wear resistance of SKF Duralip with increased high-temperature resistance (→ **diagram 3** on **page 34**). SKF Duratemp is also more resistant to chemical attack, weather, ageing and ozone. However, mixtures of oil in air may have a negative effect. The upper operating temperature limit is 150 °C *(300 °F)*, which is significantly higher than that of ordinary nitrile rubber. SKF Duratemp is mainly used for seals for heavy industrial applications or where extended service life is required.

SKF Duralife[1] (V)

The fluoro rubber (FKM) compound, SKF Duralife, has been developed by SKF and is characterized by its very good wear, thermal and chemical resistance. Its resistance to weather and ageing from UV light and ozone is also very good and its gas permeability is very slight.

SKF Duralife has exceptional properties even under harsh environmental conditions and can withstand operating temperatures ranging from –20 to +200 °C *(–5 to +390 °F)*. In applications with low dynamic runout, the temperature range can be extended down to –40 °C *(–40 °F)*. SKF also offers special low-temperature fluoro rubber compounds on request.

SKF Duralife is also resistant to oils and hydraulic fluids, fuels and lubricants, mineral acids and aliphatics as well as aromatic hydrocarbons that would cause many other seal materials to fail. Seals made of SKF Duralife can also tolerate dry running of the lip for short periods. The seals should not be used in the presence of esters, ethers, ketones, certain amines and hot anhydrous hydrofluorides. Because of the compound's valuable properties, SKF manufactures seals with sealing lips made of SKF Duralife for all common shaft diameters.

Polytetrafluoroethylene (PTFE)

PTFE is a thermoplastic polymer that is compatible with a wide assortment of lubricants and features chemical resistance that is far superior to that of any other sealing lip material. PTFE has a smooth, dirt-resistant surface. Seals with PTFE lips can accommodate high surface speeds while offering extended service life. The seals can tolerate dry running and are particularly valuable in highly contaminated applications because of their excellent exclusion ability. PTFE is used for auxiliary seal elements or for primary sealing lips for special applications. For optimum performance, PTFE seal elements require a high-quality seal counterface and extra care during installation. The normal operating temperature range extends from –70 to +200 °C *(–90 to +390 °F)*, but may go up to 250 °C *(480 °F)*.

WARNING:
At temperatures above 300 °C *(570 °F)*, all fluoro elastomers and PTFE compounds give off dangerous fumes. This can occur, for example, if a welding torch is used when removing a bearing. Although the fumes are only produced at such high temperatures, once heated, the seals will be dangerous to handle even when they have cooled down. If it is necessary to handle PTFE or fluoro elastomer seals that have been subjected to the high temperatures mentioned above, the following safety precautions should be observed:

- Protective goggles and gloves should always be worn.
- The remains of seals should be put in an airtight plastic container marked "Material will etch".
- Comply with the safety precautions included in the material safety data that can be provided upon request.

If there is contact with your skin, this should be washed with soap and plenty of water. Wash your eyes with plenty of water if these materials get into your eyes. A doctor should always be consulted. This also applies if the fumes have been inhaled.

[1] Previously named *LongLife*

Polyacrylate elastomer

Polyacrylate elastomers are more heat resistant than nitrile rubber or SKF Duralip. The operating temperature range for polyacrylate elastomers lies between –40 and +150 °C *(–40 and +300 °F)* and in some fluids the upper limit may be extended to 175 °C *(345 °F)*. Seals of polyacrylate are resistant to ageing and ozone and are also suitable for use with lubricants containing EP additives. They should not be used to seal water, acids or alkalis etc. Dry running should be avoided.

Silicone rubber

Silicone rubber is characterized by high thermal resistance and can withstand temperatures ranging from –70 to +160 °C *(–90 to +320 °F)*. Silicone rubber absorbs lubricants, thereby minimizing friction and wear. SKF silicone rubber seals are particularly suitable for applications with very low or very high temperatures and for low-friction sealing of bearing arrangements. They are not very resistant to oxidized oils or certain EP additives and should be protected against abrasive substances. Sealing lips made of silicone rubber should not be exposed to dry running.

Wear resistance

The wear resistance of a seal depends largely on the sealing lip material, as well as on the shaft surface finish, type of lubricant, circumferential speed, temperature and pressure differentials.

A comparison of wear resistance for various sealing lip materials used by SKF is provided in **diagram 2**. It is valid for seals of the same size, operating under identical conditions.

Diagram 2

Wear resistance

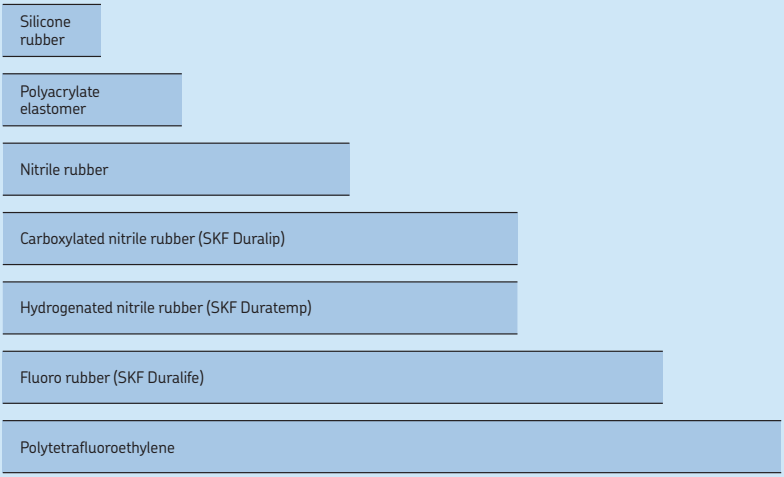

Operating temperatures

Both low and high temperatures influence the sealing performance. At low temperatures, the sealing lip loses its elasticity and becomes hard and brittle. Sealing efficiency decreases and the seal becomes more susceptible to mechanical damage.

For applications where temperatures are continuously high, special high-temperature lip materials should be used, for example, PTFE or the SKF fluoro rubber material, SKF Duralife.

Friction, circumferential speed, viscosity of the medium being sealed as well as the specific heat transfer along the shaft influence the temperature at the sealing position and the temperature between the lip and lubricant film on the counterface. High temperatures generally lead to a breakdown of the lubricant film, resulting in insufficient lubrication, one of the most common causes of premature seal failure.

The static sealing ability between the outside diameter of the seal and the housing bore may also be affected if these components are made of different materials with significantly different coefficients of expansion and shrinkage.

Refer to **diagram 3** to view the permissible operating temperature ranges of sealing lip materials normally used by SKF.

Diagram 3

Permissible operating temperatures

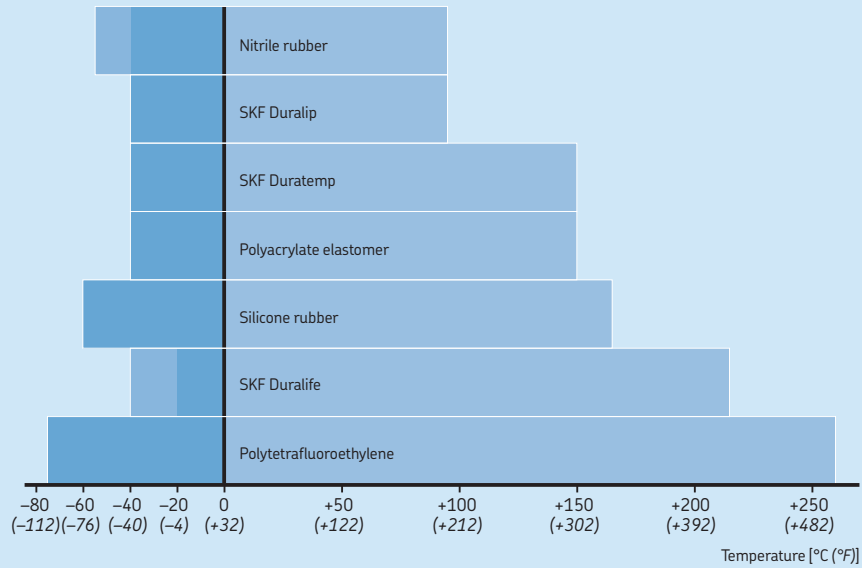

Chemical resistance

In **table 2**, *Chemical resistance* (→ **pages 36 to 43**), information is provided regarding the resistance of SKF sealing lip materials to most of the substances encountered in industrial applications. The information is based on in-house testing and the experience of users, as well as information from the suppliers of the various materials. Unless otherwise stated, the information is valid for media of commercial purity and quality.

The chemical resistance of a seal is influenced by temperature, pressure and the amount of media present. Other important factors to consider when selecting a suitable sealing lip material include:

- type of service (static or dynamic)
- circumferential speed of the sealing lip
- shaft and housing materials
- surface finish of the seal counterface

Because the above mentioned factors also influence the service life and performance of the seal, the information contained in the table *Chemical resistance* can only be considered as a rough guide.

Explanation for table 2 (→ pages 36 to 43), Chemical resistance

RT = room temperature [20 °C *(70 °F)*]
1 = minor effect
2 = moderate effect
3 = static only
4 = not recommended
5 = insufficient data, test before use

Table 2

Chemical resistance

Medium	Temperature	Medium's effect on sealing lip material			
		R, D, H	V	P	S
–	°C (°F)	–			
A					
Acetaldehycle	RT	4	4	4	2
Acetamide	RT	1	2	4	2
Acetic acid, 100% (glacial)	60 (140)	3	3	4	2
Acetic acid, 30%	RT	2	2	4	1
Acetic acid, 3% (vinegar)	RT	2	1	4	1
Acetic anhydride	RT / 80 (175)	3	4	4	3
Acetone	RT	4	4	4	3
Acetophenone	RT	4	4	4	4
Acetylene	60 (140)	1	1	5	2
Acrylonitrile	RT / 60 (140)	4	3	4	4
Adipic acid (aq)	RT	1	1	5	5
Alum (aq)	100 (210)	1	1	4	1
Aluminium acetate (aq)	RT	2	4	4	4
Aluminium chloride (aq)	RT	1	1	1	2
Aluminium fluoride (aq)	RT	1	1	5	2
Aluminium nitrate (aq)	RT	1	1	5	2
Aluminium phosphate (aq)	RT	1	1	5	1
Aluminium sulphate (aq)	RT / 60 (140)	1	1	4	1
Ammonia (anhydrous)	RT	2	4	4	3
Ammonia gas	RT	1	4	4	2
Ammonia gas	80 (175) / 100 (210)	4	4	4	1
Ammonium carbonate (aq)	RT / 60 (140)	2	5	4	5
Ammonium chloride (aq)	RT / 60 (140)	1	1	5	5
Ammonium chloride (dry) (sal ammoniac)	RT	1	1	1	2
Ammonium nitrate (aq)	RT	1	5	2	5
Ammonium persulphate (aq)	RT	4	5	4	5
Ammonium phosphate (aq)	RT / 60 (140)	1	5	5	1
Ammonium sulphate (aq)	100 (210)	1	4	4	5
Amyl acetate	RT	4	4	4	4
Amyl alcohol	60 (140)	2	2	4	4
Aniline	60 (140) / 100 (210)	4	3	4	4
Aniline dyes	RT	4	2	4	3
Aniline hydrochloride	RT	2	2	4	4
Aniline hydrochloride	100 (210)	4	5	5	5
Animal fats	80 (175)	1	1	1	2
Aqua Regia	RT	4	5	4	4
Arsenic acid	RT / 60 (140)	1	1	3	1
Arsenic trichloride (aq)	RT	1	5	5	5
Asphalt (liquid)	100 (210)	2	2	4	4
B					
Barium chloride (aq)	RT / 60 (140)	1	1	1	1
Barium hydroxide (aq)	RT / 60 (140)	1	1	4	1
Barium sulphate	RT / 60 (140)	1	1	4	1
Barium sulphide (aq)	RT / 60 (140)	1	1	4	1
Beer	RT	1	1	4	1
Benzaldehyde	RT / 60 (140)	4	4	4	4
Benzene	RT	4	1	4	4
Benzene sulphonic acid	RT	4	1	4	4
Benzoic acid	RT / 60 (140)	4	1	4	4
Benzoyl chloride	RT	4	1	4	5
Benzyl alcohol	RT / 60 (140)	4	1	1	2
Benzyl benzoate	50 (120) / 60 (140)	4	1	4	5
Benzyl chloride	RT	4	1	4	4
Blast furnace gas	100 (210)	4	1	4	1
Borax (aq)	RT / 60 (140)	2	1	5	2
Bordeaux mixture	RT	2	1	4	2
Boric acid	60 (140) / 100 (210)	1	1	4	1
Brake fluid, ATE	80 (175)	4	4	4	1
Brake fluid, glycol ether	80 (175)	4	5	4	1
Brine (sodium chloride, aq)	RT / 50 (120)	1	1	4	1
Bromine, anhydrous (liquid/gaseous)	RT	4	1	4	4
Bromine trifluoride	RT	4	4	4	4
Bromine water	RT	4	1	4	4
Bromobenzene	RT	4	1	4	4

Chemical resistance

Medium	Temperature	Medium's effect on sealing lip material			
		R, D, H	V	P	S
–	°C (°F)	–			
Bunker oil	60 (140)	1	1	1	2
Butadiene (gaseous or liquified)	RT	4	1	4	4
Butane (gaseous or liquified)	RT	1	1	1	4
Butter (animal fat)	RT / 80 (175)	1	1	1	2
Butyl acetate	RT	4	4	4	4
Butyl acrylate	RT	4	4	4	5
Butyl alcohol	RT	2	1	4	2
Butyl amines	RT	3	4	4	4
Butylene	RT	2	1	4	4
Butyl stearate	50 (120)	2	1	5	5
Butyraldehyde	RT	4	4	4	4
C					
Calcium acetate (aq)	RT	2	4	4	4
Calcium bisulphite (aq)	RT	1	1	4	1
Calcium chloride (aq)	60 (140)	1	1	1	1
Calcium hydroxide (aq)	RT	1	1	4	1
Calcium hypochlorite (aq)	RT / 60 (140)	2	1	4	2
Calcium nitrate (aq)	RT / 40 (105)	1	1	1	2
Cane sugar liquors	RT / 60 (140)	1	1	4	1
Carbon dioxide	RT	1	1	5	2
Carbon disulphide	RT	3	1	3	4
Carbonic acid	RT	2	1	1	1
Carbon monoxide	60 (140)	1	1	5	1
Carbon tetrachloride	RT / 60 (140)	3	1	4	4
Castor oil	RT	1	1	1	1
Cellosolve (ethyl glycol)	RT	4	3	4	4
Cellosolve acetate (ethyl glycol acetate)	RT	4	4	4	4
Chlorine (dry)	RT	4	1	4	4
Chlorine (wet)	RT	4	1	4	4
Chlorine dioxide	RT	4	1	4	5
Chlorine trifluoride	RT	4	4	4	4
Chloroacetic acid	60 (140)	4	4	4	5
Chloroacetone	RT	4	4	4	4
Chlorobenzene	RT	4	1	4	4
Chlorobromomethane	RT	4	1	4	4
Chlorobutadiene	RT	4	1	4	4
Chloroform	RT	4	1	4	4
Chlorosulphonic acid	RT	4	4	4	4
Chlorotoluene	RT	4	1	4	4
Chromic acid	60 (140)	4	1	4	3
Citric acid	60 (140) / 70 (160)	1	1	5	1
Cobalt chloride (aq)	RT	1	1	4	2
Coconut oil	50 (120) / 80 (175)	1	1	1	1
Cod liver oil	RT	1	1	1	2
Coke oven gas	80 (175)	4	1	4	2
Copper acetate (aq)	RT	2	4	4	4
Copper chloride (aq)	RT	1	1	1	1
Copper sulphate (aq)	60 (140)	1	1	4	1
Corn oil	RT / 60 (140)	1	1	1	1
Cottonseed oil	RT / 70 (160)	1	1	1	1
Cresol	50 (120) / 70 (160)	4	1	4	4
Cumene (isopropylbenzene)	RT	4	1	4	4
Cyclohexane	RT	1	1	1	4
Cyciohexanol	RT	3	1	5	4
Cyclohexanone	RT	4	4	4	4
p-Cymene	RT	4	1	4	4
D					
Decahydronaphthalene (decalin)	RT / 60 (140)	4	1	5	4
Detergent	RT	1	1	4	1
Developing fluids (photography)	RT	1	1	5	1
Diacetone alcohol	RT	4	4	4	2
Dibenzyl ether	RT	4	4	5	5
Dibutyl amine	RT	4	4	4	3
Dibutyl ether	RT	4	3	3	4

cont. table 2

Chemical resistance

Medium	Temperature	Medium's effect on sealing lip material			
		R, D, H	V	P	S
–	°C (°F)	–			
Dibutyl phthalate	RT / 60 (140)	4	3	4	2
Dibutyl sebacate	RT / 60 (140)	4	2	4	2
o-Dichlorobenzene	RT	4	1	4	4
Dicyclohexylamine	RT	3	4	4	5
Diethyl amine	RT	2	4	4	2
Diethyl benzene	RT	4	1	5	4
Diethyl ether	RT	4	4	3	4
Diethyl sebacate	RT	2	2	4	2
Diisopropyl benzene	RT	4	1	5	5
Dimethyl aniline (Xylidine)	RT	3	4	4	4
Dimethyl ether	RT	1	2	4	1
Dimethyl formamide	RT / 60 (140)	2	4	4	2
Dimethyl phthalate	RT	4	2	4	5
Dioctyl phthalate	RT / 60 (140)	3	2	4	3
Dioctyl sebacate	RT / 60 (140)	4	2	4	3
Dioxane	RT / 60 (140)	4	4	4	4
Dioxolane	RT	4	4	4	4
Dipentene	RT	2	1	4	4
Diphenyl oxide	RT	4	1	4	3
Dowtherm oils	100 (210)	4	1	4	3
Dry cleaning fluids	40 (105)	3	1	4	4
E					
Epichlorohydrin	RT	4	4	4	4
Ethane	RT	1	1	1	4
Ethanol (denatured alcohol)	RT	1	1	4	1
Ethanolamine (monoethanolamine)	RT	2	4	4	2
Ethanolamine (di- and triethanolamine)	50 (120)	5	4	4	2
Ethyl acetate	RT	4	4	4	2
Ethyl acrylate	RT	4	4	4	2
Ethyl benzene	RT	4	1	4	4
Ethyl benzoate	RT	4	1	4	4
Ethyl chloride	RT	1	1	4	4
Ethylene	RT	1	1	5	5
Ethylene chloride	RT	4	2	4	4
Ethylene chlorohydrin	RT	4	1	4	3
Ethylene diamine	RT	1	4	4	1
Ethylene glycol	RT	1	1	2	1/2
Ethylene glycol	100 (210)	1	1	3	1/2
Ethylene oxide	RT	4	4	4	4
Ethylene trichloride	RT	4	1	4	4
Ethyl ether	RT	3	4	4	4
Ethyl formate	RT	4	1	5	5
Ethyl glycol (Cellosolve)	RT	4	3	4	4
Ethyl glycol acetate (Cellosolve acetate)	RT	4	4	4	4
Ethyl silicate	RT	1	1	5	5
F					
Fatty acids	100 (210)	2	1	5	3
Ferric chloride (aq)	RT	1	1	1	2
Ferric nitrate (aq)	RT	1	1	1	3
Ferric sulphate (aq)	RT	1	1	1	2
Fish oil	RT	1	1	5	1
Fluorine (liquified)	RT	4	2	4	4
Fluorobenzene	RT	4	1	4	4
Fluorosilic acid	60 (140)	1	1	5	4
Formaldehyde	RT	3	1	4	2
Formaldehyde, 37%	below 100 (210)	2	1	4	2
Formic acid	RT / 60 (140)	2	3	5	2
Fuels					
– Aero engine fuels JP:					
– JP3 (MIL-J-5624 G)	RT	1	1	2	4
– JP4 (MIL-J-5624 G)	RT	1	1	2	4
– JP5 (MIL-J-5624 G)	RT	1	1	2	4
– JP6 (MIL-F-25656 B)	RT / 60 (140)	1	1	5	4

Chemical resistance

Medium	Temperature	Medium's effect on sealing lip material			
		R, D, H	V	P	S
–	°C (°F)	–			
– ASTM reference fuels:					
– ASTM-A (MIL-S-3136 B Typ 1)	RT / 60 (140)	1	1	2	4
– ASTM-B (MIL-S-3136 B Typ 111)	RT / 60 (140)	1	1	5	4
– ASTM-C	RT / 60 (140)	2	1	4	4
– Diesel fuel	60 (140)	1	1	2	2
– Fuel oil	60 (140)	1	1	1	4
– Gasohol (10% ethanol or methanol)	RT	2	3	4	4
– Kerosene	RT	1	1	1	4
– Mineral oil	100 (210)	1	1	1	2
– Petrol	RT	1	1	4	4
Fumaric acid	RT	1	1	4	2
Furan	RT	4	5	4	5
Furfural	RT	4	4	4	4
Furfuran	RT	4	5	4	5
G					
Gelatine (aq)	40 (105)	1	1	4	1
Glucose	RT	1	1	5	1
Glue	RT	1	1	5	1
Glycerin	100 (210)	1	1	3	1
Glycols	100 (210)	1	1	4	1/2
H					
n-Hexaldehyde	RT	4	4	5	2
Hexane	RT / 60 (140)	1	1	1	4
1-Hexene	RT	2	1	1	4
Hexyl alcohol	RT	1	1	4	2
Hydraulic fluids					
– Hydraulic oils (acc. to DIN 51524)	80 (175)	1	1	1	3
– Hydraulic fluids (acc to DIN 51502):					
– HFA (oil in water emulsion)	55 (130)	1	1	5	5
– HFB (water in oil emulsion)	60 (140)	1	1	5	5
– HFC (aqueous Polymer solutions)	60 (140)	1	1	5	1
– HFD (phosphoric esters)	80 (175)	4	2/4	4	4
– Skydrol 500	80 (175)	4	4	4	3
– Skydrol 7000	80 (175)	4	2	4	3
Hydrazine	RT	2	4	5	3
Hydrobromic acid	RT / 60 (140)	4	1	4	4
Hydrochloric acid (conc.)	RT	3	1	4	3
Hydrochloric acid (conc.)	80 (175)	4	2	4	4
Hydrocyanic acid (Prussic acid)	RT	2	1	4	3
Hydrofluoric acid (conc.)	RT	4	1	4	4
Hydrofluoric acid (conc.)	100 (210)	4	3	4	4
Hydrofluoric acid (anhydrous)	100 (210)	4	4	4	4
Hydrogen gas	RT	1	1	2	3
Hydrogen peroxide (90%)	RT	4	2	4	2
Hydrogen sulphide (wet)	RT / 100 (210)	4	4	4	3
Hydroquinone	RT	4	2	4	5
Hypochlorous acid	RT	4	1	4	5
I					
Iodine pentafluoride	RT	4	4	4	4
Isobutyl alcohol	RT	2	1	4	1
Isooctane	RT	1	1	1	4
Isophorone	RT	4	4	4	4
Isopropyl acetate	RT / 80 (175)	4	4	4	4
Isopropyl alcohol	RT / 60 (140)	2	1	4	1
Isopropyl chloride	RT	4	1	4	4
Isopropyl ether	RT / 60 (140)	2	4	3	4
L					
Lactic acid	RT	1	1	4	1
Lactic acid	100 (210)	4	1	4	2
Lard	80 (175)	1	1	1	2
Lavender oil	RT	2	1	2	4
Lead acetate (aq)	RT / 60 (140)	2	2	4	4

cont. table 2

Chemical resistance

Medium	Temperature	Medium's effect on sealing lip material			
		R, D, H	V	P	S
–	°C (°F)	–			
Lead nitrate (aq)	RT	1	5	5	2
Linoleic acid	RT	2	2	5	2
Linseed oil	RT / 60 (140)	1	1	1	1
Lubricants					
– ASTM oil No. 1	100 (210)	1	1	1	3
– ASTM oil No. 2	100 (210)	1	1	1	3
– ASTM oil No. 3	100 (210)	1	1	1	3
– ATF oils, type A	100 (210)	1	1	1	4
– ATF oils, type I	100 (210)	1	1	1	4
– ATF oils, type II	100 (210)	1	1	1	4
– ATF oils, type F	100 (210)	1	1	1	4
– ATF oils, type Mercon	100 (210)	1	1	1	4
– EP lubes	100 (210)	2	1	1	4
– Fluorolube	100 (210)	1	2	5	1
– Grease MIL-G-7118 A	80 (175)	1	1	3	3
– Grease MIL-G-7711 A	80 (175)	1	1	1	3
– Lubricating oils (petroleum)	100 (210)	1	1	1	4
– Red oil (MIL-H-5606)	100 (210)	1	1	1	4
– RJ-1 (MIL-F-25558 B)	100 (210)	1	1	1	4
– RP-1 (MIL-F-25576 C)	100 (210)	1	1	1	4
– Motor oil SAE 30	100 (210)	1	1	1	1
– Transmission oil SAE 90	100 (210)	1	1	1	4
– Transmission oil MIL-L-23699 A	100 (210)	1	1	3	3
– Silicone greases	120 (250)	1	1	1	3
– Silicone oils	120 (250)	1	1	1	3
– Transformer oil (Pyranol)	60 (140)	4	1	5	4
– Transformer oil	60 (140)	1	1	2	2
– Transmission fluid type A	RT	1	1	1	2
– Turbine oil	100 (210)	2	1	1	4
M					
Magnesium chloride (aq)	100 (210)	1	1	5	1
Magnesium hydroxide (aq)	100 (210)	2	1	4	5
Magnesium sulphate (aq)	100 (210)	1	1	4	1
Maleic acid	100 (210)	4	1	4	5
Maleic anhydride	60 (140)	4	4	4	5
Malic acid	RT	1	1	4	2
Mercury	RT / 60 (140)	1	1	5	5
Mercury chloride (aq)	RT / 60 (140)	1	1	5	5
Mesityl oxide	RT	4	4	4	4
Methane	RT	1	2	1	4
Methanol (methyl alcohol)	60 (140)	1	4	4	1
Methyl acetate	RT	4	4	4	4
Methyl acrylate	RT	4	4	4	4
Methyl aniline	RT	4	2	4	5
Methyl bromide	RT	2	1	3	5
Methyl cellosolve (methyl glycol)	RT	3	4	4	4
Methyl chloride	RT	4	2	4	4
Methyl cyclopentane	RT	4	2	4	4
Methylene chloride	RT	4	2	4	4
Methyl ethyl ketone	RT	4	4	4	4
Methyl formate	RT	4	5	5	5
Methyl glycol (Cellosolve)	RT	3	4	4	4
Methyl isobutyl ketone	RT	4	4	4	4
Methyl methacrylate	RT	4	4	4	4
Methyl salicylate	RT	4	5	5	5
Milk	RT	1	1	4	1
Mustard gas	RT	5	5	5	1
N					
Naphtha	RT	2	1	2	4
Naphthalene	60 (140)	4	1	5	4
Naphthalenic acid	RT	2	1	5	4
Natural gas	RT	1	1	2	1
Neat-s-foot oil	RT / 60 (140)	1	1	1	2
Nickel acetate (aq)	RT	2	4	4	4

Chemical resistance

Medium	Temperature	Medium's effect on sealing lip material			
		R, D, H	V	P	S
–	°C (°F)	–			
Nickel chloride	RT	1	1	4	1
Nickel sulphate (aq)	RT / 60 (140)	1	1	4	1
Nitric acid (conc.)	RT	4	3	4	4
Nitric acid (fuming)	RT	4	4	4	4
Nitric acid (dilute)	RT	4	1	4	2
Nitrobenzene	50 (120)	4	2	4	4
Nitroethane	RT	4	4	4	4
Nitrogen	RT	1	1	1	1
Nitrogen tetroxide	RT	4	4	4	4
Nitromethane	RT	4	4	4	4
O					
Octadecane	RT / 50 (120)	1	1	2	4
n-Octane	RT	2	1	4	4
Octyl alcohol	RT	2	1	4	2
Oleic acid	70 (160)	1	2	2	4
Olive oil	60 (140)	1	1	1	3
Oxalic acid	70 (160)	2	1	5	4
Oxygen	RT	2	1	2	1
Oxygen	> 100 (210)	4	2	4	2
Ozone	RT	4	1	2	1
P					
Palmitic acid	60 (140)	1	1	4	4
Peanut oil	RT / 50 (120)	1	1	1	1
Perchloric acid	RT	4	1	4	4
Perchloroethylene	RT / 60 (140)	2	1	4	4
Petroleum	below 120 (250)	1	1	2	2
Petroleum	above 120 (250)	4	2	4	4
Petroleum ether	RT / 60 (140)	1	1	1	4
Petroleum gas (liquified)	RT	1	1	3	3
Phenol	60 (140) / 100 (210)	4	1	4	4
Phenyl ethyl ether	RT	4	4	4	4
Phenyl hydrazine	RT / 60 (140)	4	1	4	5
Phoron (diisopropylidene acetone)	60 (140)	4	4	4	4
Phosphoric acid, 20%	50 (120) / 60 (140)	2	1	5	2
Phosphoric acid, 45%	50 (120) / 60 (140)	4	1	5	3
Phosphorus trichloride	RT	4	1	5	5
Pickling solution	RT	4	2	4	4
Picric acid	RT	4	1	5	4
Pinene	RT	2	1	4	4
Pine oil	RT	4	1	5	4
Piperidine	RT	4	4	4	4
Potassium acetate (aq)	RT	2	4	4	4
Potassium chloride (aq)	RT / 60 (140)	1	1	1	1
Potassium cyanide (aq)	RT / 50 (120)	1	1	1	1
Potassium dichromate (aq)	RT	1	1	1	1
Potassium hydroxide (aq)	60 (140)	2	4	4	4
Potassium nitrate (aq)	RT / 60 (140)	1	1	1	1
Potassium sulfate (aq)	RT / 60 (140)	1	1	4	1
Propane	RT	1	1	1	4
Propyl acetate	RT	4	4	4	4
Propyl alcohol	RT / 60 (140)	1	1	4	1
Propylene	RT	4	1	4	4
Propylene oxide	RT	4	4	4	4
Prussic acid (hydrocyanic acid)	RT	2	1	4	3
Pyridine	RT	4	4	4	4
Pyroligneous acid	RT	4	4	4	5
Pyrrole	RT	4	4	4	2
R					
Rapeseed oil	RT	2	1	2	4
Refrigerants (acc. to DIN 8962)					
– R 11	RT	2	1	5	4
– R 12	RT	1	2	1	4
– R 13	RT	1	1	5	4

cont. table 2

Chemical resistance

Medium	Temperature	Medium's effect on sealing lip material			
		R, D, H	V	P	S
–	°C (°F)	–			
– R 13 B1	RT	1	1	5	4
– R 14	RT	1	1	5	4
– R 21	RT	4	4	5	4
– R 22	RT	4	4	2	4
– R 31	RT	4	4	5	5
– R 32	RT	1	4	5	5
– R 112	RT	3	1	5	4
– R 113	RT	1	2	5	4
– R 114	RT	1	2	5	4
– R 114 B2	RT	2	2	5	4
– R 115	RT	1	2	5	5
– R C 318	RT	1	2	5	5
S					
Salicylic acid	RT	2	1	5	5
Sea water	RT	1	1	4	1
Silver nitrate (aq)	RT	2	1	1	1
Soap solution	RT	1	1	4	1
Sodium acetate (aq)	RT	2	4	4	4
Sodium bicarbonate (aq)	60 (140)	1	1	5	1
Sodium bisulphite (aq)	100 (210)	1	1	4	1
Sodium carbonate (soda)	RT / 60 (140)	1	1	5	1
Sodium chloride (aq)	RT / 100 (210)	1	1	5	1
Sodium cyanide (aq)	RT	1	1	5	1
Sodium hydroxide (aq)	RT	2	2	3	2
Sodium hypochlorite (aq)	RT / 50 (120)	2	1	4	5
Sodium metaphosphate	RT / 60 (140)	1	1	5	2
Sodium nitrate (aq)	RT / 60 (140)	2	5	5	4
Sodium phosphate (aq)	RT / 60 (140)	1	1	4	4
Sodium silicate (aq)	RT / 60 (140)	1	1	5	5
Sodium sulphate (aq) (Glauber's salt)	RT / 60 (140)	1	1	4	1
Sodium thiosulphate (aq)	RT / 50 (120)	2	1	4	1
Soyabean oil	RT	1	1	1	1
Stannic chloride (aq)	RT / 80 (175)	1	1	5	2
Stannous chloride (aq)	RT / 80 (175)	1	1	5	2
Steam	below 150 (300)	4	4	4	3
Steam	above 150 (300)	4	4	4	4
Stearic acid	60 (140)	2	2	4	2
Stoddard solvent	RT	1	1	1	4
Styrene	RT	4	2	4	4
Sucrose solution	RT / 60 (140)	1	1	4	1
Sulphur	RT / 60 (140)	4	1	4	3
Sulphur chloride (aq)	RT	3	1	4	3
Sulphur dioxide (dry)	RT / 60 (140)	4	1	4	2
Sulphur dioxide (liquified)	RT / 60 (140)	4	1	4	2
Sulphur dioxide (wet)	RT / 60 (140)	4	1	4	2
Sulphur hexafluoride	RT	2	1	4	2
Sulphuric acid (conc.)	RT / 50 (120)	4	1	4	4
Sulphuric acid (20%) (battery acid)	60 (140)	4	1	4	4
Sulphuric acid (dilute)	RT	3	1	2	4
Sulphurous acid	RT / 60 (140)	4	1	4	4
Sulphur trioxide	RT	4	1	4	2
T					
Tannic acid	RT / 60 (140)	1	1	4	2
Tar, bituminous	RT	2	1	4	2
Tartaric acid	60 (140)	1	1	5	1
Tepineol	RT	2	1	5	5
Tetrabromoethane	RT	4	1	4	4
Tetrabromomethane	RT	4	1	5	4
Tetrabutyl titanate	RT	2	1	5	5
Tetrachloroethylene	60 (140)	4	2	4	4
Tetraethyl lead	RT	2	1	5	5
Tetrahydrofuran	RT	4	4	4	4
Tetrahydronaphthalene (Tetralin)	RT	4	1	5	4
Thionyl chloride	RT	4	2	4	5

cont. table 2

Chemical resistance

Medium	Temperature	Medium's effect on sealing lip material			
		R, D, H	V	P	S
–	°C (°F)	–			
Titanium tetrachloride	RT	2	1	4	4
Toluene	RT	4	1	4	4
Toluene diisocyanate	RT	4	4	4	4
Triacetin	RT	2	1	4	5
Tributoxy ethyl phosphate	RT	4	1	4	5
Tributyl phosphate	RT / 60 (140)	4	4	4	4
Trichloroacetic acid	60 (140)	5	4	4	4
Trichloroethane	RT	4	1	4	4
Trichloroethylene	RT	4	1	4	4
Tricresyl phosphate	RT / 60 (140)	4	1	4	3
Triethanol amine	RT	2	4	4	5
Triethyl aluminium	RT	4	2	4	5
Triethyl borane	RT	4	1	4	5
Trinitrotoluene	RT	4	2	4	5
Trioctyl phosphate	RT / 60 (140)	4	2	4	3
Tung oil (China wood oil)	RT	1	1	1	4
Turpentine	RT	1	1	2	4
V					
Varnish	RT	2	1	4	4
Vegetable oil	60 (140)	1	1	1	2
Vinyl acetylene	RT	1	1	5	2
Vinyl chloride	RT	4	1	5	5
W					
Water	100 (210)	1	1	4	1
Whisky	RT	1	1	4	1
White oil	RT / 80 (175)	1	1	1	4
Wine	RT	1	1	4	1
Wood oil	RT	1	1	1	4
X					
Xylene	RT	4	1	4	4
Xylidine (di-methyl aniline)	RT	3	4	4	4
Z					
Zeolites	RT	1	1	5	5
Zinc acetate (aq)	RT	1	1	4	4
Zinc chloride (aq)	RT	1	1	4	1
Zinc sulphate (aq)	RT	1	1	4	1

Storage and handling of seals

General

The following guidelines for the storage and cleaning of seals are valid for natural and synthetic elastomer materials and are in accordance with ISO 2230 and DIN 7716 standards. The storage guidelines set forth in DIN 7716 are valid for long-term storage.

Unfavourable storage conditions and improper handling can change the physical properties of most products made from natural or synthetic rubber. This can result in hardening or softening, permanent deformation, peeling or cracks, which can lead to a shortened service life or render the products altogether useless. These changes can be brought about by storing the products under stress or load or from the influence of oxygen, ozone, heat, light, moisture or solvents. When stored properly, elastomer products generally retain their properties for several years.

Storage

The storage area should be cool, dry, moderately ventilated and there should be as little dust as possible. Outdoor storage without protection should be avoided.

The appropriate storage temperature depends on the elastomer. The most favourable storage temperature for synthetic rubber seals is 15 to 25 °C *(60 to 80 °F)*.

Elastomer products that have been subjected to low temperatures during transport or storage may become stiff. They should therefore be warmed and kept at a temperature of at least 20 °C *(70 °F)* before being unpacked and used in order to prevent exposure to condensation.

In heated storage rooms, the products should be shielded from the heat source. There should be at least 1 m *(3 ft.)* between the packages and the source of heat. In rooms where a heater with a fan is used, the distance should be greater. Storage in damp rooms should be avoided because of the risk of condensation. A storage facility with relative humidity below 65% is excellent.

Seals should be protected from light, particularly direct sunlight or artificial light with a high proportion of UV radiation. Any windows in the store should therefore be covered with a red or orange coating (never blue). Ordinary light bulbs are preferred for illumination.

Seals should be wrapped or stored in airtight containers, protecting them from atmospheric changes and particularly against drafts.

Because ozone is particularly damaging, steps must be taken to make sure that no ozone is produced in the storage facility as the result of using electric motors or other equipment that can produce sparks or other electric discharges. Combustion fumes and vapours that can produce ozone as the result of photochemical processes should be exhausted. For this reason, solvents, fuels, lubricants, chemicals, acids, disinfectants etc. should not be stored in the same room as the seals.

Elastomer products should not be subjected to tension, compression or other forms of load during storage as this can produce permanent deformations and cracks. Seals should therefore not be hung on hooks during storage. Certain metals, especially copper and manganese, damage elastomer products. Contact with these metals should therefore be avoided and the seals should be covered with layers of paper or polyethylene to prevent such contact.

In case it is necessary to repack the seals, packaging and covering materials should not contain substances such as copper or alloys containing copper, petroleum, oil etc. that can cause damage to the seals. The packaging materials should not contain softeners.

If the products are powdered, suitable powders are talcum, chalk, finely divided glimmer and rice starch.

Seals made of different materials should not be in contact with each other. This is particularly important when the seals are different in colour as this will avoid discolouration.

Seals should be stored for the shortest period of time possible. Where long-term storage is involved, care should be taken that newly arrived products are kept separate from those already in storage to enable use of seals on a first in, first out basis.

Cleaning and maintenance

In the event that cleaning is necessary, elastomer products should be cleaned with warm, soapy water that does not exceed 30 °C *(85 °F)*, and air dried at room temperature.

Solvents such as trichloroethylene, carbon tetrachloride or hydrocarbons should not be used, nor should sharp-edged objects, wire brushes, emery cloth or sandpaper.

Elastomer/metal combinations can be cleaned using a 1:10 mixture of glycerine and alcohol.



Radial shaft seals

2

General **50**

Outside diameter design **54**
SKF Bore Tite Coating 54

Garter springs **55**

Dimensions **55**
Tolerances 55

Sealing lip design **57**

Auxiliary lips **58**

Coaxiality and runout **59**
Coaxiality 59
Runout 61

Axial movement **63**

Permissible speed **63**

Lubrication **65**
Lubrication of paired arrangements 65

Friction **66**

Chemical and thermal resistance **67**

Seals under pressure **69**

Shaft requirements **70**
General 70
Tolerances 70
Surface roughness 70
Surface finish 72
Hardness and surface treatment 72
Lead-in chamfers 72

Housing bore requirements **74**
General 74

Metal-reinforced seals 74
Seals without metal-reinforcement 74
Tolerances 76
Surface roughness 76

Seal installation, general industrial applications **77**
General 77

Seal installation, heavy industrial applications **79**
Metal-reinforced seals 79
Seals without metal reinforcement 80
Split seals 80
Cover plates 82
Multiple HS seal installations 83
Multiple HDS seal installations 84
PTFE seals 85

Protecting the counterface surface against corrosion **87**

Removal **87**

Replacement **87**

Designation system **88**
Metric radial shaft seals 88
Inch-size radial shaft seals 88

Assortment and availability **88**

Seals for general industrial applications **92**
HMS5 and HMSA10 seals 92
2.1 Product table: HMS5 and HMSA10 94
CRW1, CRWA1, CRWH1 and CRWHA1 seals 104
2.2 Product table: CRW1, CRWA1, CRWH1 and CRWHA1 105
CRW5 and CRWA5 seals 160
2.3 Product table: CRW5 and CRWA5 161
HDW1 seals 164
2.4 Product table: HDW1 164
CRS1, CRSH1, CRSA1 and CRSHA1 seals 166
2.5 Product table: CRS1, CRSH1, CRSA1 and CRSHA1 167
PTFE radial shaft seals 174
HM and TL seals for grease lubricated applications 178
2.6 Product table: HM and TL seals 179
X seals, sealing against housing bore 192
2.7 Product table: X seals 193

Seals for heavy industrial applications **202**
General 202
Metal-cased seals 202
Rubber outside diameter seals 207
Additional design features 211
Size options of metal-cased HDS seals and all-rubber HS seals 215

Product tables **216**
2.8 HDS7 216
2.9 HDS7K 222
2.10 HDL 226
2.11 HDS1, HDS2 and HDS3 242
2.12 HDS1K 258
2.13 HDS2K 260
2.14 HDSF and HDSH seals 262
2.15 HDSA and HDSB seals 264
2.16 HDSE1 270
2.17 HDSD and HDSE seals 272
2.18 SBF 274
2.19 HSF1 (split) and HSF5 (solid) 276
2.20 HSF2 (split) and HSF6 (solid) 290
2.21 HSF3 (split) and HSF7 (solid) 292
2.22 HSF4 (split) and HSF8 (solid) 298
2.23 HSF9 300
2.24 HS4 and HS5 302
2.25 HS6, HS7 and HS8 306

Radial shaft seals

General

Radial shaft seals are used between rotating and stationary machine components (→ **fig. 1**) or between two components in relative motion and consist of two main parts:

- A cylindrical outer covering of sheet steel (case) or an elastomer that has the requisite interference fit to seal statically against the housing bore.
- A sealing lip made of an elastomeric or thermoplastic material that seals dynamically and statically against the shaft. The lip has a sealing edge that is formed by moulding, cutting or grinding. It is normally pressed against the counterface surface of the shaft, with a defined radial load, by a garter spring. The edge of the sealing lip and the shaft counterface surface form the most important functional area of a radial shaft seal. The sealing effect of the lip can be enhanced by designing the contact area of the lip with hydrodynamic features.

Fig. 1

Radial shaft seal, HMS5

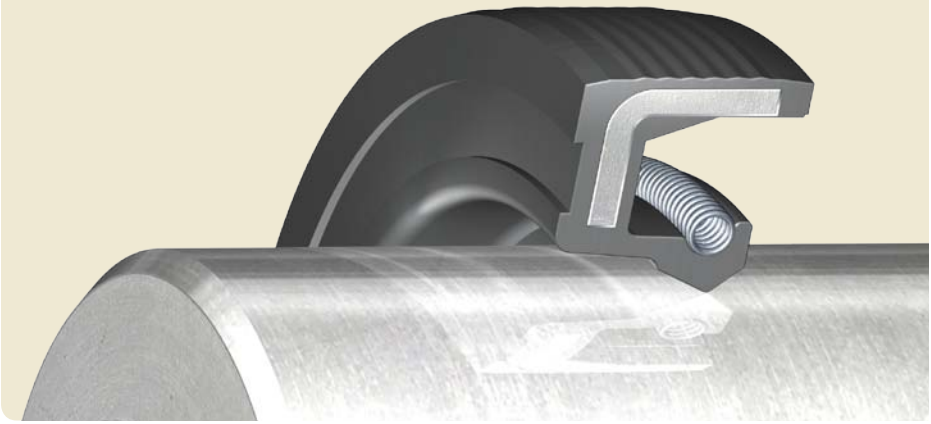

Some radial shaft seal designs have an auxiliary lip that protects the primary sealing lip from dust and other contaminants. A suitable lubricant in the space between the primary sealing lip and the auxiliary lip can reduce wear and delay corrosion. Contaminants that have passed the auxiliary lip will eventually cause damage in the counterface surface area. A build-up of heat can also occur between the two lips, resulting in premature wear.

Radial shaft seals are used in a multitude of applications. Because of the importance of radial shaft seals for the operational reliability and service life of machines and equipment, both seal manufacturers and users are equally interested, to some degree, in standardization. This has led to the establishment of national and international standards and guidelines listed in **table 1** on **page 53**. These cover boundary dimensions, tolerances, material specifications, test methods and terminology as well as the basic outside diameter constructions and sealing lip arrangements.

See **figs. 2** and **3** on **page 52** for the terminology used in this publication.

Fig. 2

Metal-cased seal with spring-loaded sealing lip

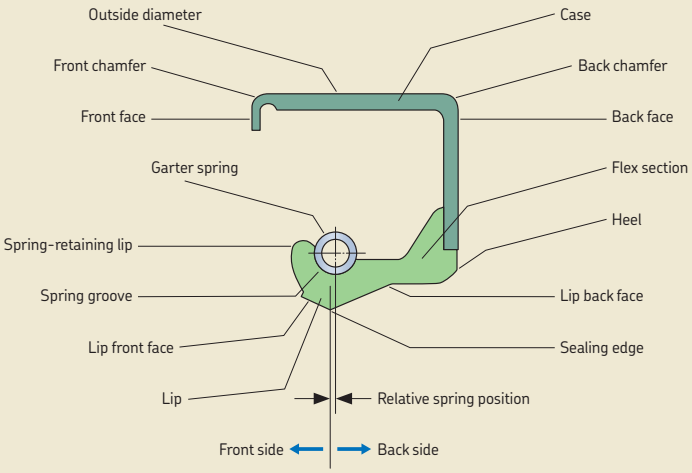

Fig. 3

Rubber outside diameter seal with spring-loaded sealing lip and auxiliary lip

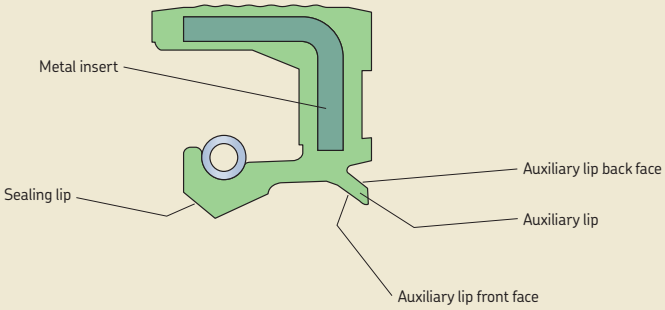

Table 1

Standards and other documents relating to radial shaft seals

Document[1)]	Title
ISO 2230	Rubber products – guidelines for storage
ISO 6194-1	Rotary shaft lip-type seals – Nominal dimensions and tolerances
ISO 6194-2	Rotary shaft lip-type seals – Vocabulary
ISO 6194-3	Rotary shaft lip-type seals – Storage, handling and installation
ISO 6194-4	Rotary shaft lip-type seals – Performance test procedures
ISO 6194-5	Rotary shaft lip-type seals – Identification of visual imperfections
SAE J946	Application guide to radial lip seals
RMA OS-1-1	Shaft requirements for rotary shaft seals
RMA OS–4	Application guide for radial lip type shaft seals
RMA OS–7	Storage and handling guide for radial lip type shaft seals
RMA OS–8	Visual variations guide for rotating shaft seals
DIN 3760	Radial-Wellendichtringe (Radial shaft seals)
DIN 3761	Radial-Wellendichtringe für Kraftfahrzeuge (Radial shaft seals for motor vehicles), Parts 1 to 15. This standard covers all aspects including vocabulary, material requirements and test methods.
DIN 7172	Tolerances and limit deviations for sizes above 3 150 mm up to 10 000 mm.
DIN 7716	Rubber products; requirements for storage, cleaning and maintenance.

1) RMA = Rubber Manufacturers Association
SAE = Society of Automotive Engineers
ISO = International Organization for Standardization
DIN = Deutsches Institut für Normung

Outside diameter design

The standard assortment of radial shaft seals manufactured by SKF for general industrial applications covers three different outside diameter executions (→ **figs. 4a** to **4c**).

Seals with a rubber outside diameter (→ **fig. 4a**) are used in a wide range of applications. They maintain a tight fit in the housing bore when the housing material has a higher coefficient of thermal expansion than steel and/or when the housing is split. They are also recommended in all applications where the housing bore surface finish requirements cannot be met.

Metal-cased seals (→ **fig. 4b**) are multi-purpose seals that can be used for most applications. They are relatively easy to install and, provided the housing bore meets the requirements, will fit tightly and centrically in the housing bore.

Radial shaft seals designed with a metal case and a secondary reinforcement in the side face (→ **fig. 4c**) offer advantages where operating conditions are severe. They have a higher radial stiffness and are available for shaft diameters ≥ 50 mm *(2 in.)*.

Besides these standard outside diameter designs, there is also a half rubber / half metal outside diameter design (→ **fig. 4d**) that is typically used in automotive applications.

In addition to the seal designs for general industrial applications described above, SKF also manufactures seals for heavy industrial applications with special features to meet specific requirements (→ **page 202**).

Fig. 4

Outside diameter designs

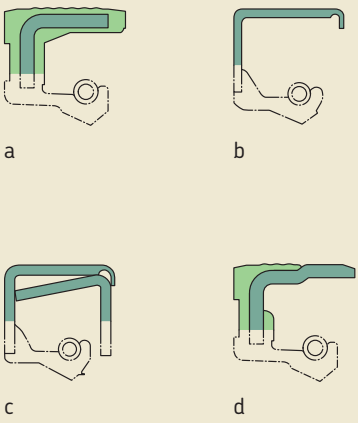

SKF Bore Tite Coating

As the static sealing ability between a metal outside diameter and the housing bore is somewhat limited, particularly in the case of low-viscosity fluids and media that can “creep”, most SKF seals with a metal case feature SKF Bore Tite Coating, a water-based acrylic sealant. SKF Bore Tite Coating is green in colour, does not harden and serves to fill small imperfections in the housing bore. For additional details, refer to **page 29**.

Garter springs

SKF radial shaft seals have garter springs made of drawn carbon steel or stainless steel spring wire. Carbon steel springs are standard unless otherwise specified.

Dimensions

SKF radial shaft seals are manufactured for a wide range of shaft diameters, from 5 to 4 600 mm *(0.2 to 181 in.)*. The range also includes standard sizes in accordance with ISO 6194-1 and DIN 3760 for shafts ranging from 6 to 500 mm *(0.24 to 19.7 in.)*.

Tolerances

SKF radial shaft seals are generally manufactured to the outside diameter tolerances listed in **table 2** on **page 56**, for metric seals, and **table 3** on **page 56** for inch-size seals. These are, where standardized, in accordance with ISO 6194-1, DIN 3760 and RMA OS-4.

Table 2

Outside diameter tolerances for metric seals

Nominal seal outside diameter		Seals with outside diameter of steel		elastomer[1]	
D		Seal outside diameter tolerance		Seal outside diameter tolerance	
over	incl.	high	low	high	low
mm		mm		mm	
	50	+0,20	+0,08	+0,30	+0,15
50	**80**	+0,23	+0,09	+0,35	+0,20
80	**120**	+0,25	+0,10	+0,35	+0,20
120	**180**	+0,28	+0,12	+0,45	+0,25
180	**300**	+0,35	+0,15	+0,45	+0,25
300	**500**	+0,45	+0,20	+0,55	+0,30
500	**630**	+0,50	+0,22	–	–
630	**800**	+0,50	+0,24	–	–
800	**1 000**	+0,55	+0,25	–	–
1 000	**1 250**	+0,60	+0,27	–	–
1 250	**1 600**	+0,65	+0,30	–	–

[1] Seals with beaded outside diameter require different tolerances.
Contact SKF for sizes outside the listed range.

Table 3

Outside diameter tolerances for inch-size seals

Bore diameter[1]			Seals with outside diameter of steel		elastomer	
D			Nominal seal	Seal outside	Nominal seal	Seal outside
over	incl.	Tolerance	outside diameter	diameter tolerance	outside diameter	diameter tolerance
in.			in.		in.	
	2.000	±0.001	+0.005	±0.002	+0.008	±0.003
2.000	**3.000**	±0.001	+0.0055	±0.0025	+0.01	±0.003
3.000	**4.000**	±0.0015	+0.0065	±0.003	+0.0105	±0.003
4.000	**5.000**	±0.0015	+0.0065	±0.003	+0.0105	±0.003
5.000	**7.000**	±0.0015	+0.007	±0.003	+0.012	±0.004
7.000	**9.000**	±0.002	+0.0085	±0.0035	+0.0125	±0.004
9.000	**10.000**	±0.002	+0.0085	±0.0035	+0.0125	±0.004

[1] Housing bores made of material other than steel may need a different nominal press-fit tolerance due to differences in thermal coefficients of expansion.
Contact SKF for sizes outside the listed range.

Sealing lip design

The form and design of a sealing lip is based on knowledge gained through research and development activities as well as wide practical experience obtained by SKF in close cooperation with users. The distance between the lip and the seal back face, the strength of the flex section, the angle of the lip (→ **fig. 2** on **page 52**) and the tension in the spring are all balanced so that the pressure applied by the garter spring provides a satisfactory sealing performance between the sealing lip and counterface.

The sealing lips of SKF radial shaft seals are manufactured from several materials and two different main designs. The various materials are described on **pages 30** to **32**. There are two main sealing lip designs that differ in the execution of the sealing lip edge. The "conventional" sealing lip (→ **fig. 5**) has a straight edge, whereas the SKF Wave lips (→ **fig. 6**) are moulded with a hydrodynamic feature that results in the lip taking a sinusoidal path on its counterface surface.

SKF Wave seals represent one of the most important developments in radial shaft seals. The sealing lip is moulded to a special form, producing a relative movement on the counterface, imparting hydrodynamic properties. SKF Wave seals are suitable for rotation in both directions. They pump the lubricant back into the bearing arrangement and expel contaminants. The sinusoidal form of the sealing lip considerably extends the path (→ **fig. 6**) on the counterface surface and at the same time reduces the specific surface pressure at the sealing lip/counterface contact.

Fig. 5

Conventional sealing lip with straight edge

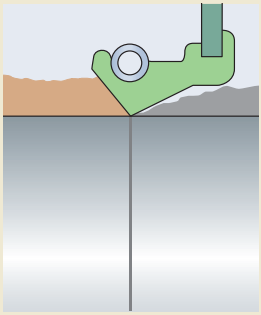

Fig. 6

SKF Wave sealing lip with sinusoidal sealing lip edge

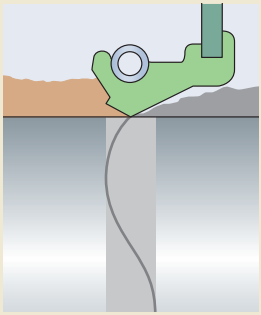

As a consequence, SKF Wave seals produce up to 20% less friction resulting in up to 30% lower temperatures than conventional lip designs (→ **diagrams 1** and **2**). Reduced friction and the sinusoidal path of the sealing lips help prevent the formation of deep tracks in the counterface, resulting in significantly extended service life. SKF Wave seals are recommended where demands for operational reliability and long service life for machines and equipment are high.

SKF seals with conventional spring-loaded sealing lips meet general demands because they are able to provide efficient sealing even under unfavourable operating conditions. To improve sealing performance, some SKF radial shaft seals are designed with hydrodynamic features on the sealing lip. These have either a right-hand twist for shafts that rotate clockwise, or a left-hand twist for shafts that rotate counterclockwise as seen from the air side. The degree to which the hydrodynamic feature improves the sealing ability depends on the form of the spiral flutes, the circumferential speed, the pressure conditions and the media being sealed. See also paragraph *Oil retention* on **page 18**.

Auxiliary lips

SKF radial shaft seals can also be designed with an auxiliary lip for increased protection against contaminants (→ **fig. 3** on **page 52**). These auxiliary lips are either contacting or non-contacting. Seal designs that incorporate contacting auxiliary lips are used in heavily contaminated environments, with the drawback, however, of creating increased friction and elevated underlip temperatures. The auxiliary lip of HMSA10 and CRWA1/CRWHA1 seals is non-contacting, which means that these designs normally can be used at the same speeds as the single-lip designs HMS5 and CRW1/CRWH1.

Diagram 1

Temperature rise at sealing lip/counterface contact for conventional and SKF Wave lips as a function of rotational speed for a 76 mm diameter shaft with SAE 30 engine oil

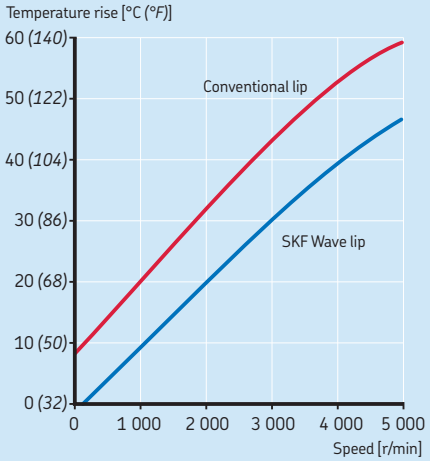

Diagram 2

Frictional moment at sealing lip/counterface contact for conventional and SKF Wave lips as a function of rotational speed for a 76 mm diameter shaft with SAE 30 engine oil

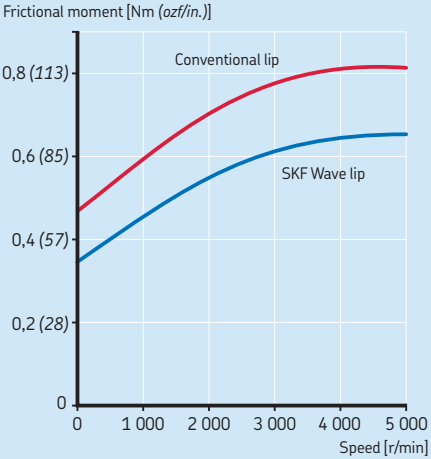

Coaxiality and runout

Deviation from coaxiality and dynamic runout of the shaft are two of many operating parameters that affect seal performance and service life. They should therefore be kept within narrow limits, particularly when there is a pressure differential across the seal. The total deviation should never exceed 1,3 times the value of the permissible deviation from coaxiality.

Coaxiality

Deviations from coaxiality, i.e. the difference between the centre lines of the shaft and housing bore (shaft-to-bore misalignment, STBM), cause force to be distributed irregularly on the sealing lip (→ **fig. 7**). This means that one section of the sealing lip will be subjected to more force, causing an enlargement of the contact area between lip and counterface surface, whereas the opposite section will be correspondingly unloaded and its sealing effect reduced. Guideline values for the permissible coaxiality deviations for SKF seals can be obtained from **diagram 3** on **page 60**.

Fig. 7

Coaxiality

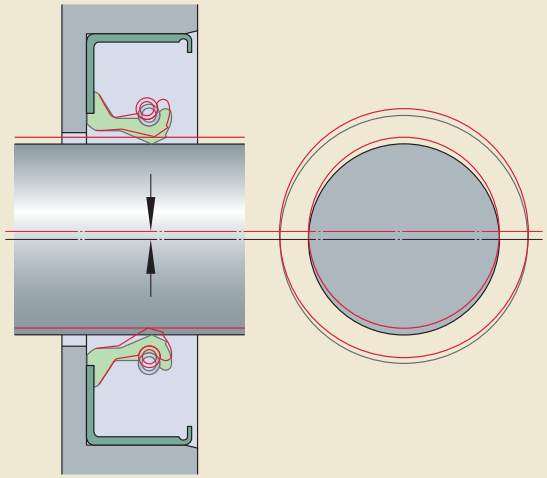

Diagram 3

Maximum permissible deviation from coaxiality as a function of shaft diameter

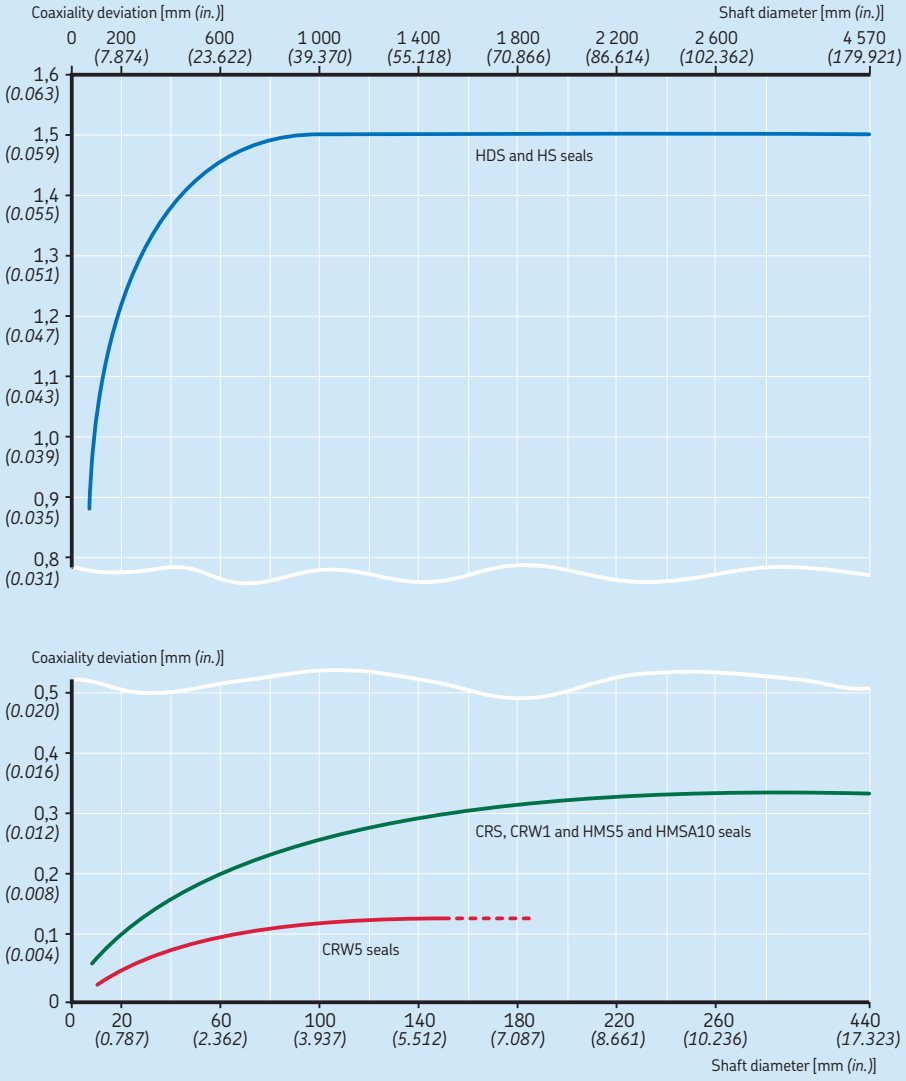

Runout

Runout (or dynamic runout, DRO) describes the dynamic eccentricity of the shaft. Particularly at high speeds, there is a risk that the sealing lip, because of its inertia, will not be able to follow the shaft surface (**→ fig. 8**). If the eccentricity is such that the distance between the sealing lip and shaft becomes larger than that required to maintain a hydrodynamic lubricant film, the medium to be sealed will escape through the gap. It is therefore advisable to arrange the seal in close proximity to the bearing and to keep bearing operating clearance to a minimum. Permissible runout values can be obtained from **diagram 4** on **page 62**. These values are normally lower for narrow seals.

Fig. 8

Runout

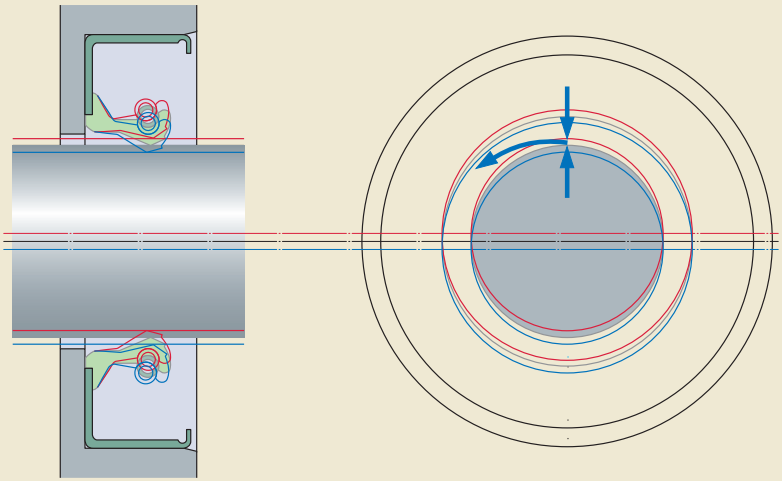

Diagram 4

Maximum permissible runout as a function of rotational speed

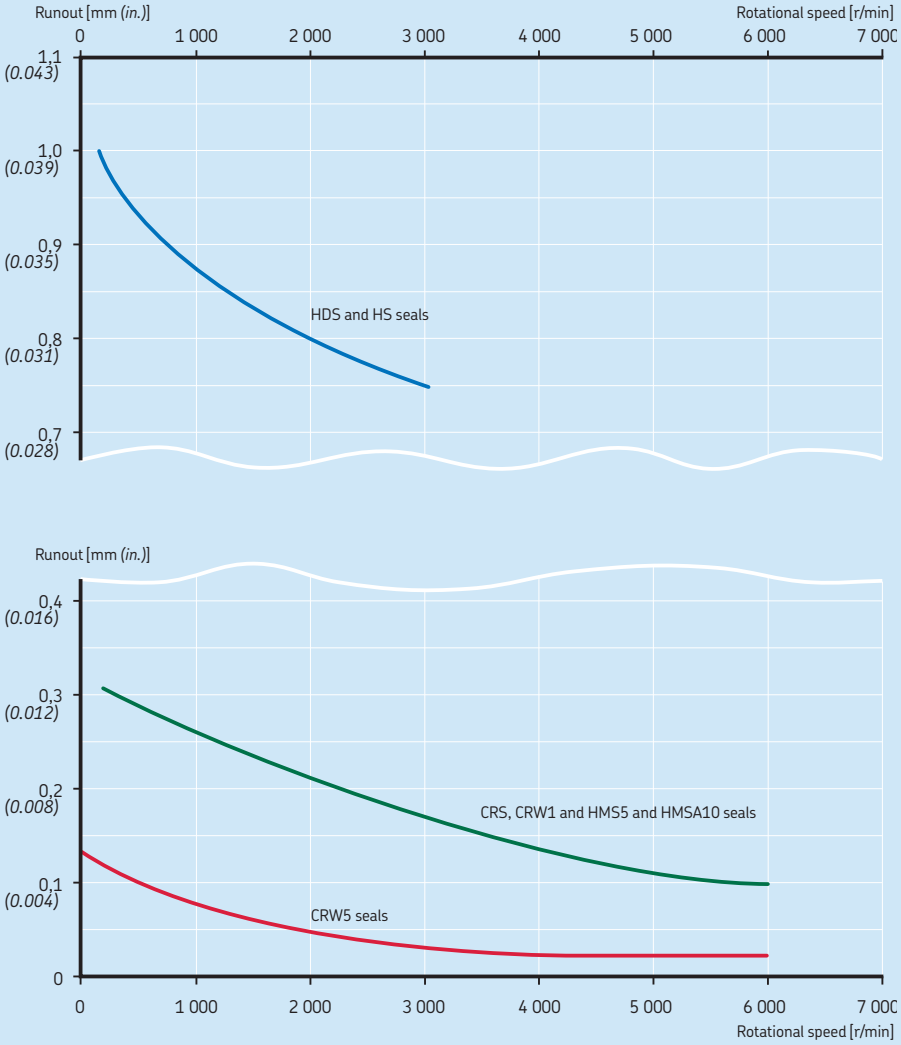

Axial movement

Small movements of the shaft relative to the housing in the axial direction do not affect seal performance, provided that the total counterface surface meets the same demands relative to hardness, accuracy and surface finish.

Permissible speeds

Guideline values for the permissible rotational and circumferential speeds for different seal designs are provided in the seal selection charts (**matrix 2** on **pages 198** to **201**). If the circumferential speeds provided in the matrix are not sufficient for a particular sealing position, **diagram 5** from DIN 3760 on **page 64** may be used. The diagram lists circumferential and rotational speeds related to the material of the sealing lip. The values are valid for spring-loaded sealing lips that are well-lubricated by a mineral oil, where adequate lubricant supply prevents heat build-up and where the pressure is the same on both sides of the seal (pressure differential = 0).

Diagram 5 shows that large diameter shafts can accommodate higher circumferential speeds than shafts with smaller diameters. This is because the cross section of the shaft does not increase linearly with the increase in diameter but by the square of the increase in diameter. Therefore, the heat dissipation of a large shaft is much better than that of a small shaft.

Generally, SKF Wave seals can be operated at higher circumferential speeds than those obtained from **diagram 5** because of the hydrodynamic form of the lip.

The values obtained from **diagram 5** should be reduced if:

- radial shaft seals with an auxiliary, contacting lip are used
- lubrication is inadequate or grease lubrication is used, i.e. when underlip temperatures increase due to poor heat dissipation
- the counterface does not meet surface finish or running accuracy requirements
- there is a pressure differential across the seal

Diagram 5

Permissible speeds for spring-loaded sealing lips where no pressure differential exists across seal in operation
For permissible speeds for seals at shaft diameters > 200 mm, refer to seal selection chart starting on **page 92**.

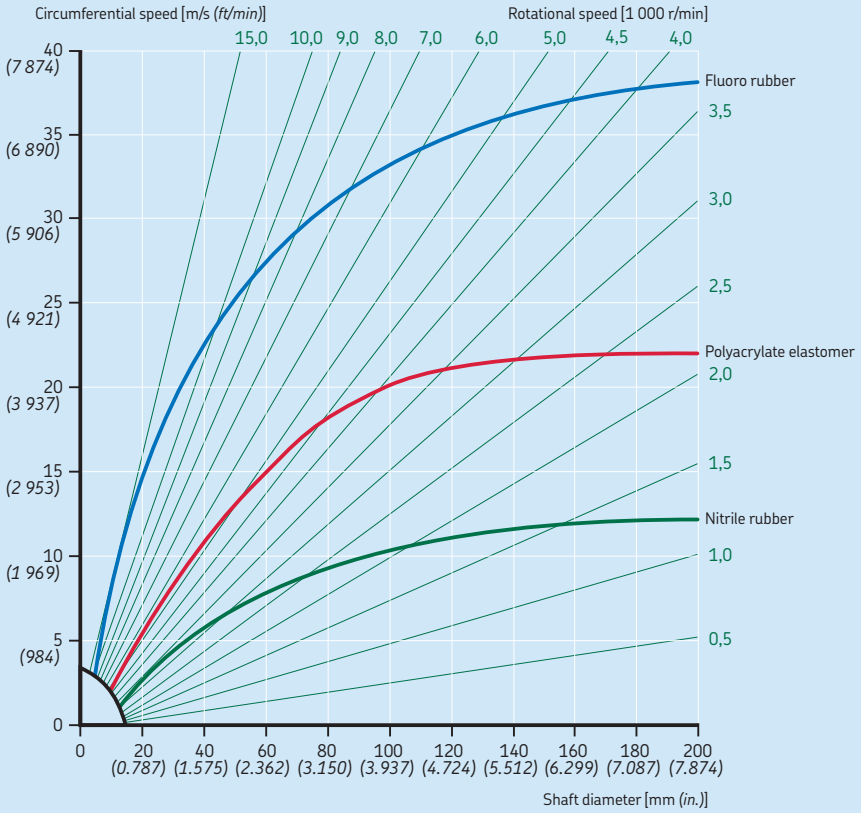

Source: DIN standard 3760

Lubrication

For a radial shaft seal to seal efficiently over a long period, the sealing lip must be lubricated. This reduces friction and wear to the sealing lip and shaft. Dry running of sealing lips made of standard materials should always be avoided. To prevent dry running, coat the counterface surface with a suitable lubricant prior to seal installation.

The lubricant must not only lubricate the sealing lip to reduce friction and wear, but also dissipate heat generated by the seal. To promote heat dissipation, a sufficient quantity of lubricant must be able to reach the sealing lip from start-up.

Some rolling bearings, such as angular contact ball bearings, tapered roller bearings and spherical roller thrust bearings, as well as gears, create a pumping action by virtue of their design. This means that the sealing lip can either be starved of lubricant, or subjected to excessive quantities of lubricant. In either case, steps must be taken during the design stage to make sure that the proper amount of lubricant reaches the sealing lip, as too much or too little can affect seal performance.

To prevent lubricant starvation, lubrication ducts can be provided. If the seal is subjected to excessive amounts of lubricant, a flinger can be installed between the bearing and seal.

In applications where the sealing lip is not exposed to a lubricant, for example when two seals are installed in tandem, grease or oil must be supplied separately to provide lip lubrication. In some cases, it may be sufficient to provide an initial grease fill between the two lips.

Lubrication of paired arrangements

When two radial shaft seals are installed back-to-back or in tandem, the space between the seals should be filled with a suitable lubricant to eliminate the risk of the sealing lip running dry.

To further prevent dry running, a spacing washer between the seals can also be used. This spacing washer should be provided with lubrication holes or an annular groove and lubrication holes so that grease can be supplied to the space between the seals via a grease fitting (→ **fig. 9**).

Fig. 9

Lubrication of a paired arrangement

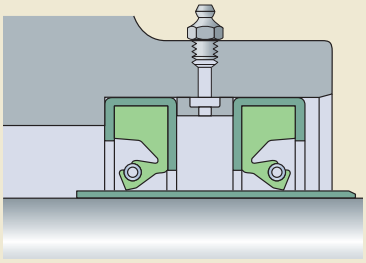

Friction

To be effective, the lip of a radial shaft seal must always exert a certain radial load on the counterface. The friction resulting from this radial load is only part of the total contact friction and power loss at the sealing position. Other contributing factors include:

- type of medium being sealed
- pressure differential across the seal
- circumferential speed
- ambient temperature
- lubricant and lubrication method
- condition of the counterface

Diagram 6 provides an indication of the friction losses that may be expected when a radial shaft seal with a conventional sealing lip is properly installed and fully lubricated.

The running-in phase of the sealing lip lasts a few hours. During this time, the friction losses are somewhat higher than during normal operation.

Seals intended for applications with high pressure differentials typically have greater losses than specified in the diagram. SKF Wave seals, on the other hand, typically have losses lower than those indicated in the diagram.

Diagram 6

Friction losses of radial shaft seals as a function of rotational speed and shaft diameter

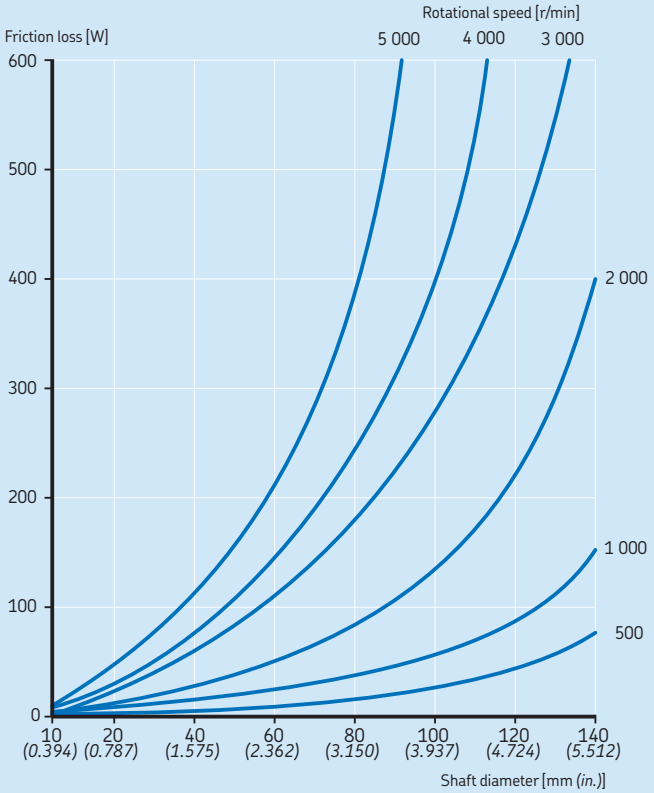

Chemical and thermal resistance

The most important factor when selecting the appropriate elastomer for a radial shaft seal is its chemical resistance to the medium to be sealed or excluded. The operating temperature is another important factor. Heat accelerates ageing of the elastomer and increases the reactivity and aggressiveness of the sealed medium.

Radial shaft seals are mainly used to seal lubricating oils and greases as well as hydraulic fluids (including non-flammable fluids). Guideline values are provided in **table 4** on **page 68** for the permissible operating temperatures, i.e. temperatures at which the SKF seals are still chemically resistant. The temperature range stated for a group of media means that the sealing material is resistant when continuously operated within this particular range.

The □ means that, within the group, there are some media that are compatible with the elastomer, but also some that have a detrimental effect on the elastomer.

The ■ means that the seal material is not resistant to media belonging to this group.

For the resistance of seal materials to media not listed in **table 4** on **page 68**, refer to the section *Chemical resistance* (→ **page 35**) or contact SKF.

Table 4

Chemical and thermal resistance, radial shaft seal lip materials

Medium to be sealed		Permissible operating temperatures (continuous) for SKF radial shaft seal lip materials[1]							
		R (NBR)		P (ACM)		S (MVQ)		V (FKM)	
–		°C	*°F*	°C	*°F*	°C	*°F*	°C	*°F*
Mineral oil based lubricants									
Motor oils		100	*210*	130	*270*	150	*300*	170	*340*
Gear oils		80	*175*	120	*250*	130	*250*	150	*300*
Hypoid gear oils		80	*175*	120	*250*	■		150	*300*
Automatic transmission fluids (ATF oils)		100	*210*	130	*270*	□		170	*340*
Greases		90	*195*	□		□		□	
Hydraulic fluids		90	*195*	120	*250*	□		150	*300*
Fire-resistant hydraulic fluids									
Oil in water emulsions and aqueous polymer solutions		70	*160*	■		60	*140*	□	
Anhydrous fluids		■		■		■		150	*300*
Other media									
Fuel oils EL and L		90	*195*	□		■		□	
Water		90	*195*	■		■		100	*210*
Alkaline washing solutions		90	*195*	■		■		100	*210*
Permissible temperature range									
for sealing lip	min:	–40	*–40*	–40	*–40*	–60	*–75*	–40	*–40*
	max:	+100	*+210*	+150	*+300*	+160	*+320*	+200	*+390*

■ Lip material not resistant
□ Lip material not resistant to some media in this group

[1] R = nitrile rubber
P = polyacrylate elastomer
S = silicone rubber
V = fluoro rubber

Seals under pressure

When a seal is exposed to pressure, the radial load of the sealing lip increases. This in turn increases the actual sealing lip/shaft contact area, resulting in additional friction and elevated underlip temperatures. Therefore, the guideline values for speeds provided in **diagram 5** on **page 64** do not apply.

Diagram 7 shows an example of lip distortion of a conventional sealing lip design as sump pressure increases, resulting in reduced seal service life.

SKF CRW5 and CRWA5 pressure profile seals (→ **fig. 10**) are designed to withstand pressure differentials of 0,34 MPa *(50 psi)* at speeds up to 5 m/s *(1 000 ft/min)*.

When there is a pressure differential across the seal, a shoulder or retaining ring should be used at the low-pressure side of the seal to prevent it from being pressed out of the housing bore (→ **fig. 11**).

Fig. 10

Pressure profile seals

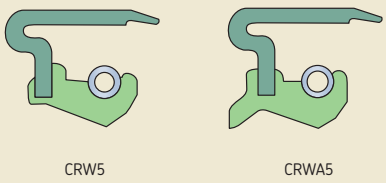

Fig. 11

CRWA5 seal

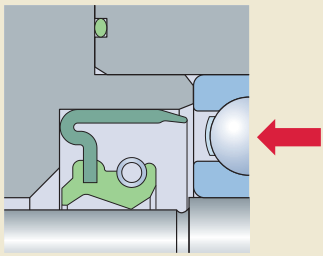

Diagram 7

Seals under pressure
Example of conventional sealing lip distortion as sump pressure increases, resulting in reduced seal service life.

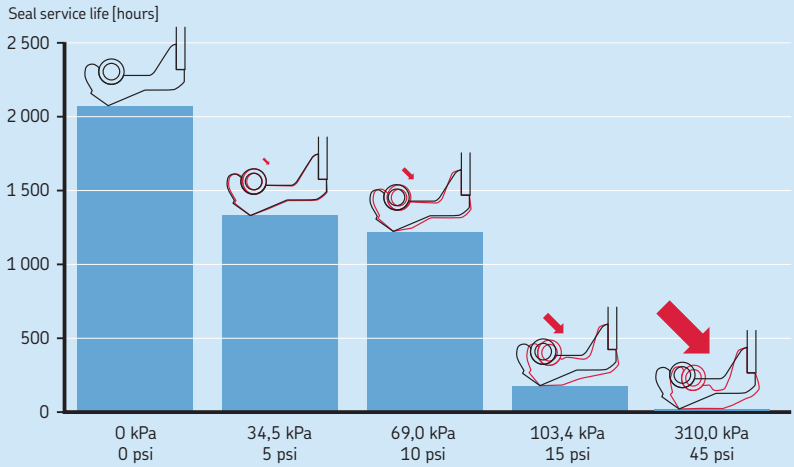

Shaft requirements

General

To achieve reliable sealing performance and maximum service life, the counterface for a radial shaft seal should meet the requirements outlined below. The seal counterface must be able to accommodate all permissible deviations and movements – surface SL and an additional surface SL' – which may be required in the case of repairs or inspection (→ **fig. 12**).

In cases where a shaft cannot be machined to meet the requirements, SKF recommends the use of SKF Speedi-Sleeve or a wear sleeve for heavy industrial applications (LDSLV). Detailed information about sleeves is provided in the chapter *Wear sleeves* starting on **page 327**.

Tolerances

The diameter of the shaft d_1 at the counterface should be machined to the tolerances provided in **table 6** for metric shafts and **table 7** for inch-size shafts.

Out-of-roundness must be less than 0,005 mm *(0.0002 in.)* at a maximum of 2 lobes or less than 0,0025 mm *(0.0001 in.)* at a maximum of 7 lobes.

If components with an interference fit will pass over the counterface during installation, the shaft diameter should be reduced by 0,2 mm *(0.008 in.)*. The seal that was originally chosen can still be used without adversely affecting seal performance.

Surface roughness

The surface roughness values of the counterface for radial shaft seals, calculated according to methods described in ISO 4288 (DIN 4768), should be kept within the limits specified in RMA OS-1-1 (→ **table 5**).

The lower value for R_a is a minimum value. Using a lower value will adversely affect the lubricant supply to the sealing lip. The temperature rise caused by inadequate lubrication, particularly at high circumferential speeds, can lead to hardening and cracking of the sealing lip which will eventually lead to premature seal failure. If the counterface is too rough, there will be

Fig. 12

Counterface for radial shaft seals

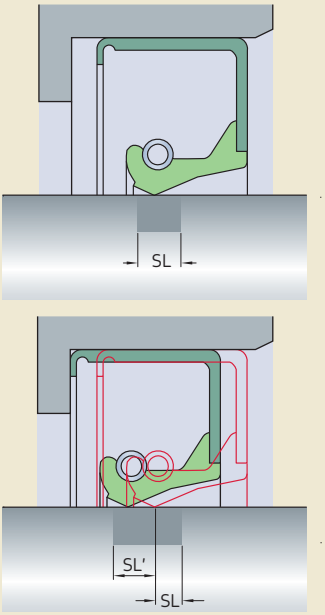

Table 5

Recommended shaft surface roughness values

	ISO		DIN		RMA	
	µm	*µin.*	µm	*µin.*	µm	*µin.*
R_a	0,2–0,5	*8–20*	0,2–0,8	*8–32*	0,2–0,43	*8–17*
R_z	1,2–3	*48–120*	1–5	*40–200*	1,65–2,9	*65–115*
R_{pm}	N/A	*N/A*	N/A	*N/A*	0,5–1,5	*20–50*

Table 6

Counterface tolerances for metric shafts

Shaft diameter Nominal d_1 over	incl.	**Diameter tolerance (ISO h11)**[1] Deviation high	low
mm		µm	
6	**10**	0	–90
10	**18**	0	–110
18	**30**	0	–130
30	**50**	0	–160
50	**80**	0	–190
80	**120**	0	–220
120	**180**	0	–250
180	**250**	0	–290
250	**315**	0	–320
315	**400**	0	–360
400	**500**	0	–400
500	**630**	0	–440
630	**800**	0	–500
800	**1 000**	0	–560
1 000	**1 250**	0	–660
1 250	**1 600**	0	–780
1 600	**2 000**	0	–920
2 000	**2 500**	0	–1 100
2 500	**3 150**	0	–1 350
3 150	**4 000**	0	–1 650
4 000	**5 000**	0	–2 000

[1] For shaft diameters of 3 150 mm and above, refer to DIN 7172.

Table 7

Counterface tolerances for inch-size shafts

Shaft diameter Nominal d_1 over	incl.	**Diameter tolerance (RMA 0S-4)** Deviation high	low
in.		in.	
–	**4**	+0.003	–0.003
4	**6**	+0.004	–0.004
6	**10**	+0.005	–0.005
10		+0.006	–0.006

excessive sealing lip wear and seal service life will be shortened. If the value R_{pm} is exceeded, the seal will leak or excessive sealing lip wear may occur.

Surface finish

Depending on the direction of rotation, directionality on the seal counterface may cause a seal to leak. Plunge grinding is the preferred machining method to minimize directionality (0±0,05°) on the seal counterface. When plunge grinding, whole number ratios of the grinding wheel speed to the work piece speed should be avoided. Run the grinding wheel until it "sparks out" completely, i.e. until there are no more sparks flying from the wheel, to ensure that all lead is removed. The grinding wheel should be dressed using a cluster head dressing tool and the smallest possible lateral feed, or a profile dressing roll without lateral feed. The negative influence of directionality in any particular case can only be ascertained by test running under conditions of alternating rotation.

The seal counterface surface should be free of any damage, scratches, cracks, rust or burrs and should be properly protected until final installation.

Hardness and surface treatment

The surface hardness of the seal counterface should be at least 30 HRC (58 HRC for PTFE lip seals). If the counterface surface could be damaged during transport or installation, this value should be increased to 45 HRC (62 HRC for PTFE lip seals). Under certain conditions, where speeds are low, lubrication is good and contaminants are absent, counterface surfaces having a lower hardness may be suitable. Surfaces that are nitrided, phosphated or have a galvanized coating may also be suitable, but this must be determined for each specific case.

Lead-in chamfers

To install radial shaft seals without damaging the sealing lip, SKF recommends chamfering or rounding the shaft ends or shoulders (→ **table 8**).

If the direction of installation is Z, the values ($d_1 – d_2$) provided in **table 8** should be adhered to. If the direction of installation is Y, the shaft end could be either rounded (r) or chamfered ($d_1 – d_2$).

To install a seal over a shaft shoulder or end that has not been rounded or chamfered, SKF recommends using an installation sleeve. See section *Seal installation, heavy industrial applications* on **page 79**.

Lead-in chamfers and radii

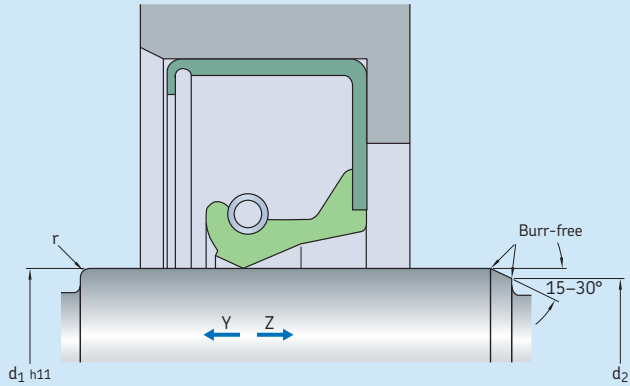

Shaft diameter Nominal				**Diameter difference**[1]		**Radii** Seal without auxiliary lip		Seal with auxiliary lip	
d_1 over	incl.	over	incl.	$d_1 - d_2$ min		r min		r min	
mm		*in.*		mm	*in.*	mm	*in.*	mm	*in.*
–	**10**	–	*0.394*	1,5	*0.059*	0,6	*0.024*	1	*0.039*
10	**20**	*0.394*	*0.787*	2	*0.079*	0,6	*0.024*	1	*0.039*
20	**30**	*0.787*	*1.181*	2,5	*0.098*	0,6	*0.024*	1	*0.039*
30	**40**	*1.181*	*1.575*	3	*0.118*	0,6	*0.024*	1	*0.039*
40	**50**	*1.575*	*1.968*	3,5	*0.138*	0,6	*0.024*	1	*0.039*
50	**70**	*1.968*	*2.756*	4	*0.157*	0,6	*0.024*	1	*0.039*
70	**95**	*2.756*	*3.740*	4,5	*0.177*	0,6	*0.024*	1	*0.039*
95	**130**	*3.740*	*5.118*	5,5	*0.216*	1	*0.039*	2	*0.079*
130	**240**	*5.118*	*9.449*	7	*0.276*	1	*0.039*	2	*0.079*
240	**500**	*9.449*	*19.685*	11	*0.433*	2	*0.079*	3	*0.118*
500	–	*19.685*	–	13	*0.512*	5	*0.197*	5	*0.197*

[1] If the corner is blended rather than chamfered, the blended section should not be smaller than the difference in diameters $d_1 - d_2$.

Housing bore requirements

General

To reduce the risk of seal damage during installation, the housing bore should have a 15 to 30° lead-in chamfer. The chamfer should be free of burrs and the transition radius r between the seal seat and shoulder should be in accordance with the recommendations in **table 9**.

In order to facilitate seal removal, holes in the housing shoulder A can be incorporated during the design stage.

Metal-reinforced seals

The depth of a metric housing bore B for metal-cased or metal-inserted seals should be at least 0,3 mm *(0.012 in.)* larger than the nominal seal width b (→ **fig. 13**). The corresponding values for an inch housing bore B are 0.016 in. *(0,4 mm)*.

Seals without metal-reinforcement

Seals without metal reinforcement are manufactured oversized relative to the housing bore diameter and depth to enable proper compression and stability. The actual seal width is approximately 0,4 to 0,8 mm *(0.016 to 0.032 in.)* wider than the bore depth B. For all-rubber HS seals, the bore depth tolerance should be ±0,13 mm *(0.005 in.)* and ±0,10 mm *(0.004 in.)* for all-rubber reinforced HSS seals and fabric-reinforced HSF seals. For seals without metal reinforcement, a cover plate is required for a proper fit (→ **page 82**).

Fig. 13

Housing bore requirements

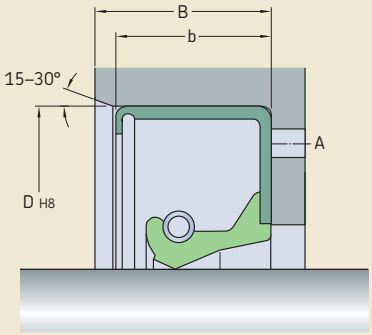

Housing bore tolerances

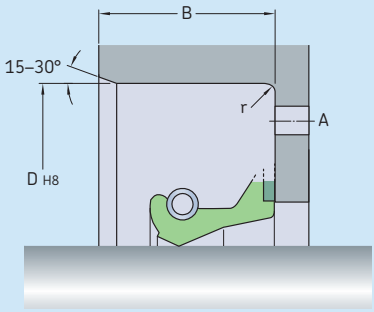

Housing bore for metric seals (ISO)

Nominal diameter D		Housing bore tolerance (ISO tolerance H8)		Fillet radii r
over	incl.	high	low	max
mm		µm		mm
–	3	+14	0	0,3
3	6	+18	0	0,3
6	10	+22	0	0,3
10	18	+27	0	0,3
18	30	+33	0	0,3
30	50	+39	0	0,3
50	80	+46	0	0,4
80	120	+54	0	0,8
120	180	+63	0	0,8
180	250	+72	0	0,8
250	315	+81	0	0,8
315	400	+89	0	0,8
400	500	+97	0	0,8
500	630	+110	0	0,8
630	800	+125	0	0,8
800	1 000	+140	0	0,8
1 000	1 250	+165	0	0,8
1 250	1 600	+195	0	0,8
1 600	2 000	+230	0	0,8
2 000	2 500	+280	0	0,8
2 500	3 150	+330	0	0,8
3 150[1]	4 000	+410	0	0,8
4 000[1]	5 000	+500	0	0,8

Housing bore for inch-size seals (RMA)

Nominal diameter D		Housing bore tolerance		Fillet radii r
over	incl.	high	low	max
in.		in.		in.
–	3.000	+0.001	–0.001	0.031
3.000	7.000	+0.0015	–0.0015	0.031
7.000	10.000	+0.002	–0.002	0.031
10.000[2]	12.000	+0.002	–0.002	0.031
12.000[2]	20.000	+0.003	–0.003	0.031
20.000[2]	40.000	+0.004	–0.004	0.031
40.000[2]	60.000	+0.006	–0.006	0.031

[1] SKF recommended bore specifications not covered in ISO 286-2
[2] SKF recommended bore specifications not covered in RMA OS-4

Tolerances

The housing bore diameter D should be machined to tolerance H8 (→ **table 9** on **page 75**). Depending on the operating conditions, out-of-roundness should be 1 to 2 tolerance grades better than H8.

Surface roughness

The surface roughness (to ISO 4288 or DIN 4768) of the housing bore should be kept within the limits specified in **table 10**.

Table 10

Recommended housing bore surface roughness values

	ISO[1]		**DIN**		**RMA**[2][3]	
	µm	*µin.*	µm	*µin.*	µm	*µin.*
R_a	1,6–3,2	*64–128*	1,6–3,2	*64–128*	1–2,5	*40–100*
R_z	6,3–12,5	*252–500*	10–20	400–800	N/A	*N/A*
R_{max}	N/A	*N/A*	25	*1 000*	N/A	*N/A*

1) ISO – The housing bore surface roughness may require lower values when metal-cased seals are used, in which case they should be subject to agreement between the manufacturer and user.
2) RMA – If the bore surface texture is greater than 2,5 µm *(100 µin.)* R_a, a sealant should be used.
3) RMA – Turned bores, where a lubricant head of up to 0,20 bar *(3.0 psi)* is present at the seal. If this texture is maintained and tool removal marks or bore defects are not present, no outside diameter leakage should occur.

Seal installation, general industrial applications

General

To provide effective sealing, radial shaft seals must be installed properly. An experienced installer with suitable tools, working in a clean environment, is recommended to provide proper installation. The shaft counterface surface and housing bore should meet the demands specified under *Shaft requirements* and *Housing bore requirements* on **pages 70** to**76**.

To facilitate seal installation and to achieve initial lubrication, prior to installation, SKF recommends wiping the shaft and seal with the lubricant that is going to be retained. While the outside diameter of metal-cased seals can be lightly lubricated to ease installation, the outside diameter of rubber covered seals should always be lubricated.

Seals with an auxiliary, contacting lip can also be filled with grease between the sealing lip and auxiliary lip to reduce frictional moment. This does not apply to silicone rubber seals and seals with hydrodynamic features, other than SKF Wave lip designs.

SKF also recommends using a hydraulic press, with suitable tools, to install a seal in its housing bore. Pressure should be applied as close as possible to the outside diameter of the seal.

Seals that are designed to sit flush with the wall of the housing bore must be installed perpendicular to the housing bore axis. The outside diameter of the tool should be larger than the housing bore diameter (→ **fig. 14**).

When pressing seals up against a shoulder or retaining ring, it is advisable to use tools of the type shown in **figs. 15** and **16**. The necessary ring dimensions can be supplied on request.

Fig. 14

Preferred installation method

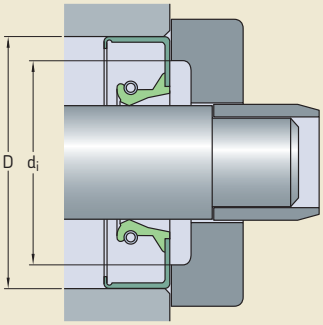

$d_i \approx D - 6$ mm

Fig. 15

Alternative installation method

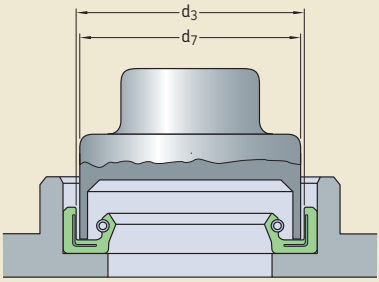

$d_7 = d_3 - 0{,}5$ mm

Fig. 16

Alternative installation method

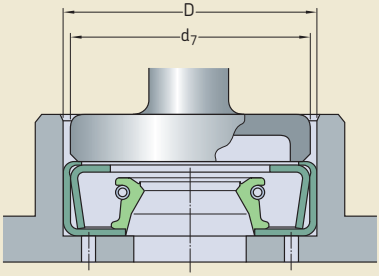

$d_7 = D - 0{,}5$ mm

Fig. 17

Installation sleeve

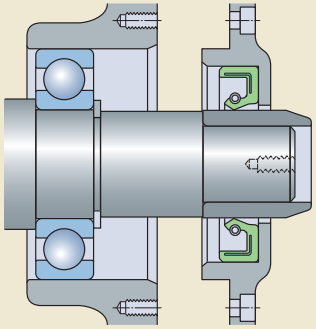

Fig. 18

Thin-walled installation sleeve

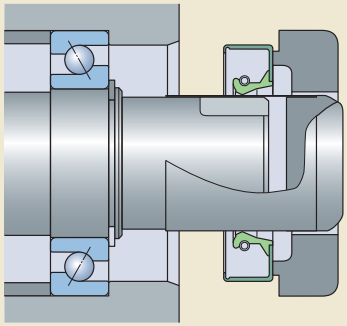

When installing seals on stepped shafts, where the shoulders do not have the recommended chamfer or rounded transition, an installation sleeve as shown in **fig. 17** must be used. If the sealing lip has to pass over grooves, threads or gearing, thin-walled installation sleeves, like those shown in **fig. 18**, can be used to prevent the lip from being damaged. The outside surface of the sleeve should be coated with the same lubricant that is used to lubricate the seal and counterface surface.

Radial shaft seals made of silicone rubber should always be installed using an installation sleeve.

The tools used to install a seal at a certain distance in a cylindrical opening in a housing are shown in **figs. 19** and **20**. Instructions for designing the tools can be supplied on request.

Fig. 19

Installation in a cylindrical opening

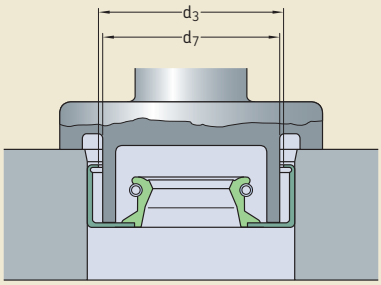

$d_7 = d_3 - 0{,}5$ mm

Fig. 20

Installation in a cylindrical opening

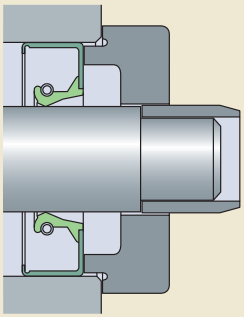

Seal installation, heavy industrial applications

Metal-reinforced seals

When installing metal-reinforced seals, the first step is to check the shaft and housing bore for proper specifications and condition. Next, coat both the seal and bore lightly with a lubricant, preferably the same one that will be used to lubricate the application. For large diameter seals, a special installation tool may not be practical. In these cases, do not hit the seal or seal case directly. Instead, use a wooden block, long enough to span the seal's outside diameter. When using this method, it is important to apply hammer-blows evenly and sequentially to the wood piece around the seal circumference to prevent the seal from tilting or skewing. SKF also recommends the use of a dead blow hammer for full energy transfer with less impact (→ **fig. 21**).

In some applications, the housing is designed for two seals in tandem, or a seal might have to be recessed further into the bore depth. In those cases, first set the seal flush with the housing using the method described above. Then, use a shorter piece of wood to drive the seal deeper into the bore utilizing a sequential pattern (→ **fig. 22**).

Fig. 21

Use a dead blow hammer

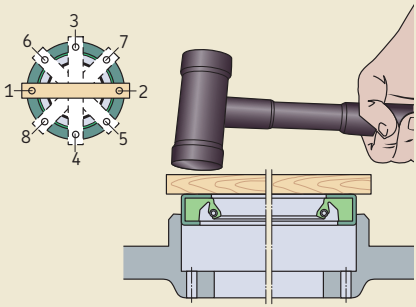

Fig. 22

Installation deeper into the bore

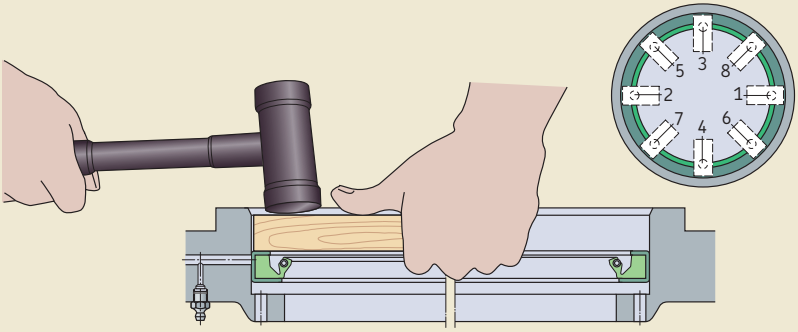

Seals without metal reinforcement

Be sure that the shaft surface and housing bore are clean and that they meet the specifications listed in *Shaft requirements* and *Housing bore requirements* on **pages 70** to **76**. Special care must be taken to avoid nicks and burrs on the shaft and to make sure that the spring is retained in the spring groove.

HS seals are installed differently depending on whether their main purpose in a specific application is to retain lubricant or to exclude contaminants (→ **fig. 23**).

Split seals

Where appropriate, insert the spring in the SKF Springlock groove and position the spring connection, so that it is displaced with regard to the seal joint (→ **A** in **fig. 24**). This is standard with all HS8 seals. Put the seal in the correct position on the shaft.

Lightly coat both the seal and counterface surface with a lubricant, preferably the same lubricant that will be used to lubricate the application (**B**).

Join the ends of the garter spring by using the spring connector (**C**).

For threaded connectors, back-wind the spring a couple of turns before the ends are brought together and allowed to thread into each other. When using a hook-and-eye connector, draw the ends of the spring together and insert the hook into the eye, taking care not to over-stretch the spring in the process, as this might impair seal performance. When using a control-wire connector, draw the seal ends together and insert the control wire into the centre of the spring coil.

Position the seal joint on the shaft so that it is at the 12 o'clock position and push both ends of the joint into the housing bore (**D**). Do not push only one joint and then work around the shaft as this will create an excess length, making installation difficult or impossible.

Continue at the 3 and 9 o'clock positions, push the rest of the seal into position (**E**) and finish simultaneously at the 6 and 12 o'clock positions. For shaft diameters ≥ 1 200 mm (*47 in.*), it is advisable to fix the seal at the 12, 3, 6 and 9 o'clock positions before locating the remaining sections of the seal.

Use a small block of wood to push the seal in the housing bore until it contacts the housing shoulder (**E**).

Check the seal condition, particularly at the joint, to make sure that it has been positioned properly.

Install the cover plate (see paragraph *Cover plates* on **page 82**) on the housing face. Tighten the bolts evenly until the end cover abuts the housing face (**F** and **G**).

Fig. 23

Ways of installing HS seals

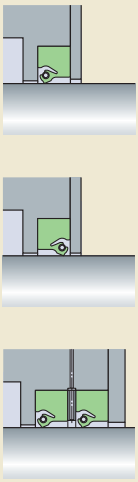

Fig. 24

Installing a split seal

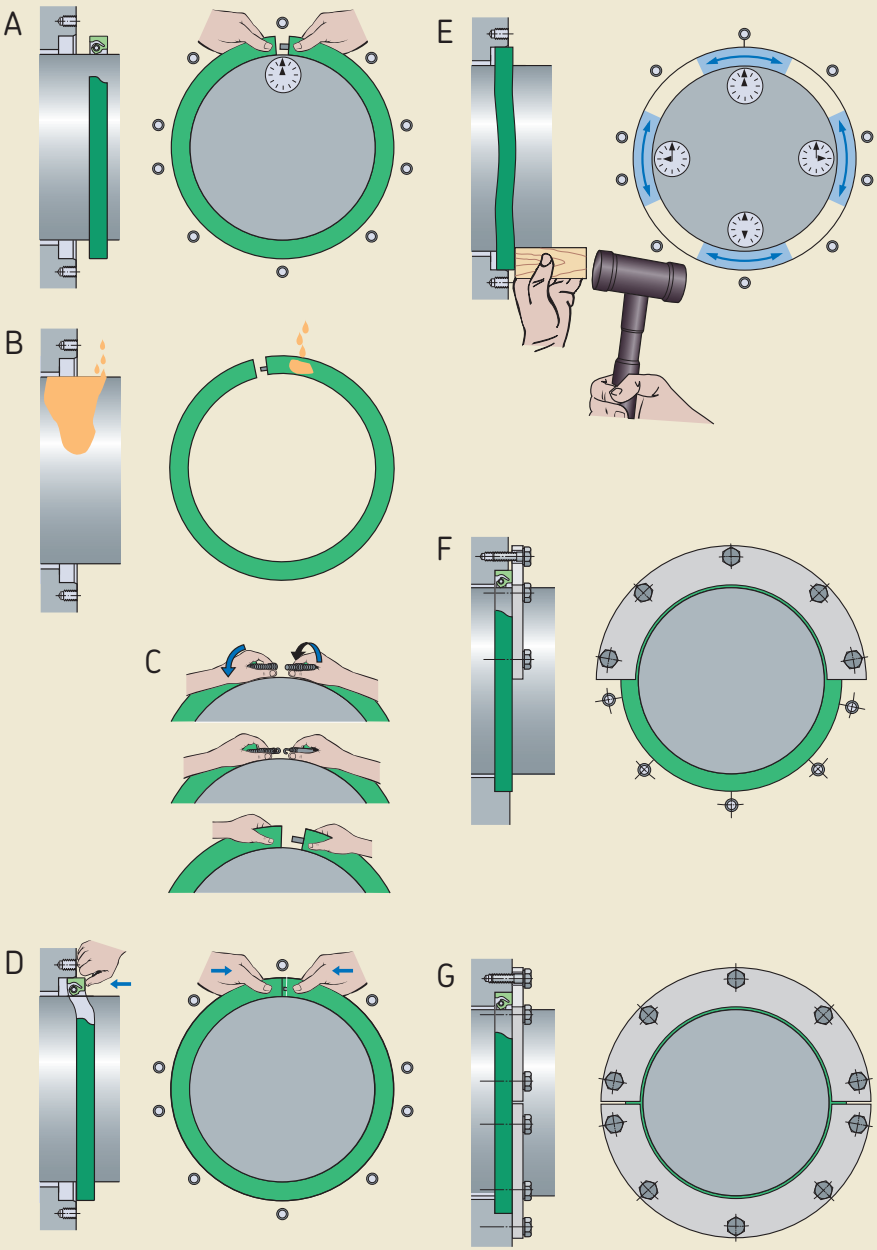

Cover plates

Seals without metal reinforcement, split and solid, are manufactured oversized relative to the housing bore diameter and depth to enable proper compression and stability. A cover plate (→ **fig. 25**) provides axial compression of the seal and stabilizes it in the housing bore to achieve maximum seal performance. The cover plate must be dimensioned properly to obtain the required fit. It should be thick enough not to bend or distort. Generally, a thickness of 6,35 to 12,7 mm *(0.25 to 0.50 in.)* is sufficient.

The plate should be fastened with bolts, no more than 150 mm *(6 in.)* apart, on a bolt circle located as close to the seal housing bore as practical. The cover plate should be flat and the housing bore depth uniform. Splitting the cover plate at 180° will make seal replacement easier, particularly in confined areas.

To block surges of lubricant toward the seal from the inside and to protect the seal from damage from the outside, SKF recommends dimensioning the inside diameter of the cover plate so that it is 6 to 8 mm *(0.25 to 0.30 in.)* greater than the shaft diameter to accommodate shaft-to-bore misalignment and runout (→ **fig. 25**).

In applications where supplementary sealing is necessary, and it is impractical to machine the original housing to provide a seal cavity, a seal cavity can be incorporated into a new plate that is bolted into place as illustrated in **fig. 26**.

Fig. 25

Cover plate recommendations

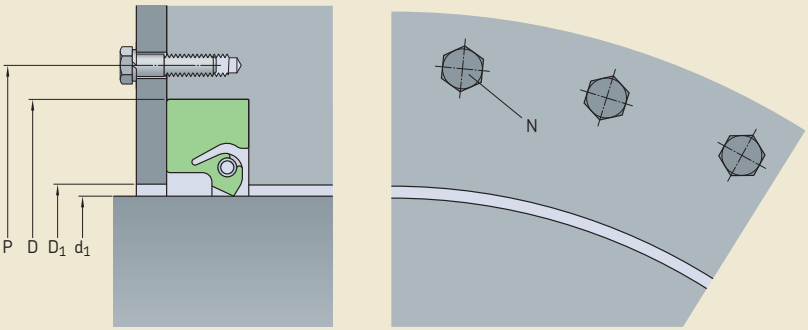

Inside diameter of cover:	$D_1 \approx d_1 + 6 .. 8$ [mm]
Pitch circle diameter of screws:	$P \approx 1{,}1\ D$ [mm]
No. of attachment screws:	$N \approx 0{,}02\ P$

Multiple HS seal installations

When installing two split all-rubber HS seals in one cavity, the locations of the split joints should be staggered by 30° to 60° to minimize the risk of leakage through the joints. The splits should be located toward the top of the bore. Grease the cavity between the seals to provide lubricant to the outer sealing lip.

When two HS seals, split or solid, are installed in the same housing bore, a spacing washer must be placed between the two seals (→ **fig. 27**). Suitable washer dimensions can be determined based on the shaft and housing bore diameters, d_1 and D, respectively:

washer inside diameter
= d_1 + 6 to 10 mm *(0.25 to 0.4 in.)*

washer outside diameter
= D – 0,5 to 1,5 mm *(0.02 to 0.06 in.)*

The width of the washer is determined by the application conditions. There should, however, always be sufficient room for lubrication holes to be provided in the circumference, or lubrication grooves in one side face (→ **fig. 28**). These lubrication provisions must enable grease to be supplied from the housing to the sealing lips via a drilled passage or grease fitting (→ **fig. 29** on **page 84**). When determining what washer width is appropriate for the depth of a housing bore, it is necessary to consider the axial displacement required when clamping the seals.

Fig. 26

Cover plate

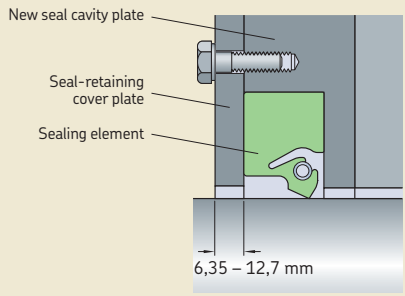

Fig. 27

Spacing washer

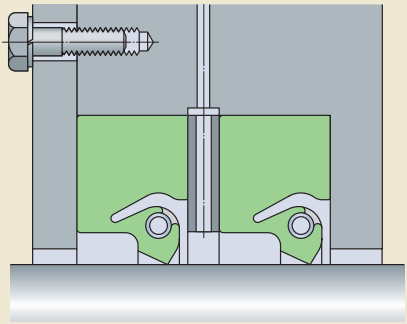

Fig. 28

Details of spacing washer for central lubrication
A separator between two seals can be a slotted washer to promote distribution of the lubricant.

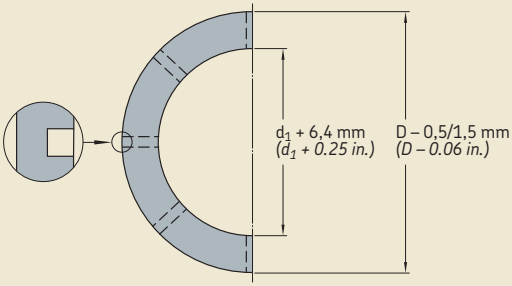

Multiple HDS seal installations

When installing two metal-cased radial shaft seals in the same housing bore, either in a tandem or back-to-back arrangement, care must be taken that neither of the sealing lips can run dry at any time. To reduce the risk of dry running, the space between the seals should be filled with a suitable grease.

To avoid dry running, SKF recommends using spacer lugs or a spacing washer between the two seals. The spacing washer should be provided with lubrication holes so that grease can be supplied to the space between the sealing lips via a grease fitting (→ **fig. 29**). No spacing washer is required when using seals that have spacer lugs built into the air side of the metal case (→ **fig. 30**). HDSD and HDSE seals can be supplied from SKF with holes pre-drilled in the metal case to mate with corresponding passages in the housing bore.

Fig. 29

Spacing washer and grease fitting

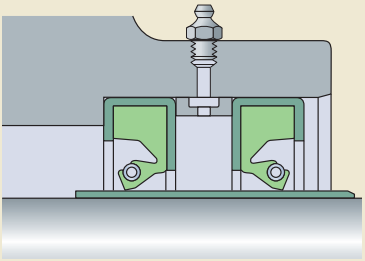

Fig. 30

Spacer lug

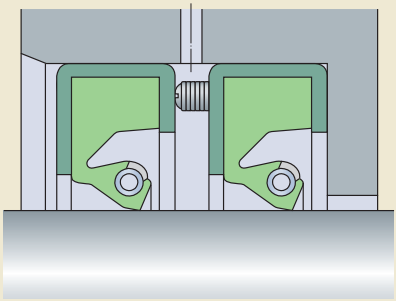

PTFE seals

In most cases, small diameter PTFE seals are shipped on a tube that maintains a nominal seal inside diameter (smaller than shaft diameter) during storage. Therefore, they should not be removed from the shipping tube until immediately prior to installation. Also, if quality inspections must be done, SKF recommends that the shipping tube remains in place. The seal inside diameter cannot be accurately measured anyway after manufacturing as the PTFE lip configuration changes over time as it relaxes.

PTFE formulations used for radial lip seals are generally more aggressive and abrasive to the shaft than standard elastomeric materials. Therefore, PTFE sealing lips require a surface hardness value of 58 to 62 HRC. An alternative to a hardened shaft surface is the use of an SKF wear sleeve, manufactured to the same high standards such as the inner rings of SKF needle roller bearings, offering an excellent sealing surface.

In applications where PTFE seals will be retaining a lubricant or be fully flooded with a fluid, the seals should be installed dry. In applications that run dry or will be starved for lubrication, the sealing lip should be pre-lubricated with a grease appropriate for the temperature conditions of the application.

WARNING: At temperatures above 300 °C (*570 °F*), all PTFE compounds give off dangerous fumes. For additional information, refer to **page 32**.

Installation procedure

PTFE lips do not have the same elastic properties as rubber lips, which makes them more susceptible to damage. Therefore, special care must be taken during installation and handling to prevent damage and help ensure proper operation and function. Shaft features such as keyways and splines, as well as drill holes, ports and sharp-edged shaft steps have the potential to damage PTFE lips. Whenever possible, these obstructions can be covered by using thin-walled installation tools made from plastic or metal.

PTFE lip orientation during installation will determine the installation method. Installation is more difficult when the shaft is installed against the PTFE lip (→ **fig. 31**, **a** and **c**). This type of installation becomes even more complicated when the hardware is difficult to access or visually obstructed and may not be possible if an installation tool cannot be used. In any case, when the shaft is installed against the PTFE lip, SKF recommends the use of an installation cone or "bullet". SKF can quote and manufacture installation cones if detailed drawings of the shaft and sealing areas are provided. In lieu of installation cones, longer than normal lead-in chamfers on the shaft would be required. However, shaft features that could damage the seal (keyways, etc.) must still be covered, possibly with tape.

If the shaft is installed with the PTFE lip, a smooth, burr-free radius or chamfer on the shaft end is all that is required, provided that no damaging shaft features are present as noted above (→ **fig. 31**, **b** and **d**).

Some seals have two PTFE lips facing opposite directions. In this case, installation is always against one of the lips and an installation cone is recommended.

Fig. 31

Seals with a PTFE sealing lip

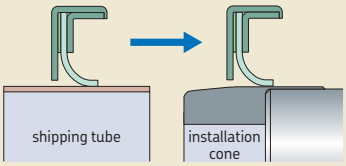

a) Installation against the PTFE lip

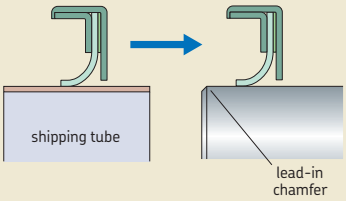

b) Installation with the PTFE lip

Seals with an elastomeric sealing lip and a PTFE auxilary lip

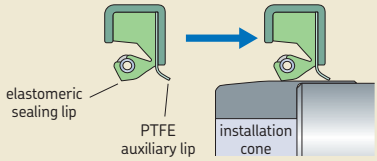

c) Installation against the PTFE lip

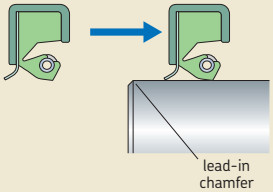

d) Installation with the PTFE lip

Protecting the counterface surface against corrosion

The seal counterface surface should be protected from corrosion until the machine is operational. Be sure to use a rust inhibitor that will last for a year, whether or not the shaft is exposed.

The protective coating should be soluble in the medium to be retained and must not cause any chemical separation as this can impair the sealing performance.

When machines are transported, stored under unfavourable conditions, or out of service for extended periods, special rust inhibitors should be used. These rust inhibitors should form a tough, pliable waxy film that can be removed using neutral solvents that leave an oily residue.

Removal

Because radial shaft seals should never be re-used, there is no need to worry about damaging the seal when removing it. However, prior to removal, it is advisable to note the direction in which the seal is installed so that the replacement seal can be installed in the same direction. Small seals can generally be removed using a screwdriver, taking care not to damage the shaft surface. The removal of large-size seals is made easier if holes have been provided in the housing shoulder A, see picture in **table 9**, **page 75**, allowing access for a drift.

Replacement

The lip of the replacement seal should not run on the same path as the lip of the old seal. There are several ways to achieve this:

- Install SKF Speedi-Sleeve, see **page 327**.
- Rework or replace the counterface (this may entail removing the shaft).
- Install a spacing ring in the housing bore between the housing shoulder and the seal (→ **fig. 32**).
- Press the new seal to a different depth in a cylindrical opening in the housing, i.e. toward the medium to be sealed.

When choosing a replacement seal, be sure that its design and material correspond to the original seal. In case of doubt, select a seal that meets the operating conditions of the application, and that the seal materials are compatible with the lubricant.

Seals made from a different material should only be used when absolutely necessary. In these cases, the recommendations provided in **table 11** should be followed. The order in which the materials are listed is an indication of their suitability.

If a seal of the same design is not available in the same width as the original, then a somewhat narrower seal can be used, or if the depth of the housing bore allows, a somewhat wider seal can be selected as the replacement.

Fig. 32

Spacing ring

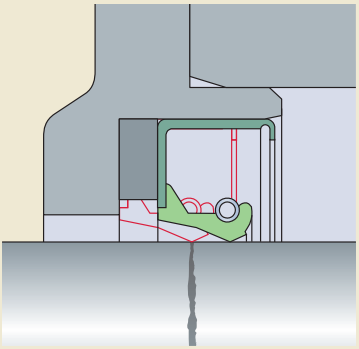

Table 11

Replacement sealing lip materials

Original	Replacement
Felt	Nitrile rubber Polyacrylate elastomer Fluoro rubber
Leather	Nitrile rubber Fluoro rubber
Nitrile rubber	Polyacrylate elastomer Fluoro rubber Silicone rubber
Polyacrylate elastomer	Fluoro rubber Silicone rubber
Silicone rubber	Fluoro rubber

Designation system

Metric radial shaft seals

Designations of all SKF metric radial shaft seals specify shaft diameter, housing bore diameter and nominal seal width (bore depth for HSF and HS seals) in millimetres, followed by design and the code of the sealing lip material (→ table 12).

Inch-size radial shaft seals

Inch-size SKF radial shaft seals are identified by their stock number that consists of four to seven digits. The stock number provides an indication of seal size.

Four-figure numbers are used for radial shaft seals for

shaft diameters:	$d_1 \leq 1$ in., e.g.
3680	$d_1 = 0.375$ in.

Five-figure numbers are used for radial shaft seals for

shaft diameters:	$d_1 \leq 10$ in., e.g.
41287	$d_1 = 4.125$ in.
97545	$d_1 = 9.750$ in.

Six- and seven-figure numbers are used for radial shaft seals for

shaft diameters:	$d_1 \geq 10$ in., e.g.
120061	$d_1 = 12$ in.
1375242	$d_1 = 13.75$ in.

Assortment and availability

The SKF assortment of radial shaft seals comprises some 200 designs and executions for applications within basically all industries. The radial shaft seals described in this publication belong to the standard range and most of them are available in both metric and inch sizes. New seal designs and sizes are continually added. For additional information, contact SKF.

Table 12

Designation system for metric radial shaft seals

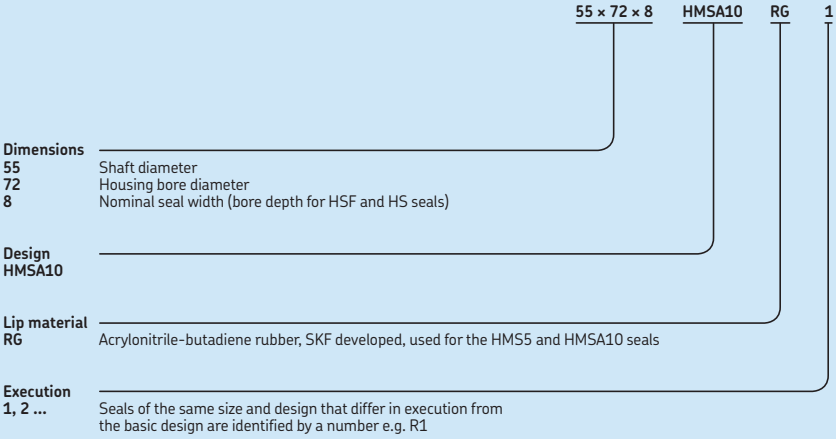

Seals for general industrial applications, selected main designs

RG, R Nitrile rubber
V Fluoro rubber
T Polytetrafluoroethylene (PTFE)

Seal designs			Design Outside diameter Configuration	Material code	Sealing lip Configuration	Material code	Auxiliary lip A = Contacting B = Non-contacting
			–				
 HMS5	 HMSA10		Rubber	RG, V	Straight	RG V	B (HMSA10)
 CRW1	 CRWH1		Metal	N/A	SKF Wave	R V	N/A
 CRWA1	 CRWHA1		Metal	N/A	SKF Wave	R V	B
 CRW5	 CRWA5		Metal	N/A	SKF Wave	R V	A (CRWA5)
 CRS1	 CRSH1		Metal	N/A	Straight	R V	N/A
 CRSA1	 CRSHA1		Metal	N/A	Straight	R V	A
 HM14			Metal	N/A	Straight	R V	N/A
 X15			Rubber	R	Special	R	N/A
 SL	 SLX	 SLS	Metal	N/A	Special	T	N/A
 SLA	 DL	 DLA	Metal	N/A	Special	T	A (SLA, DLA)
 YSLE	 YNSLE	 YSL	Fluoroplastic/ (rubber)	T (+ R, V)	Special	T	N/A

* PTFE designs are made to order to handle temperatures, pressures and speeds that may exceed those stated for rubber sealing lip designs.

Operating temperature range				Shaft-to-bore misalignment (STBM) TIR		Dynamic runout (DRO) TIR		Pressure differential		Maximum shaft surface speed	
from	to	from	to								
°C		*°F*		mm	*in.*	mm	*in.*	MPa	*psi*	m/s	*ft/min*
–40 –40	100 200	*–40* *–40*	*210* *390*	0,38	*0.015*	0,51	*0.020*	0,05	*7*	14	*2 755*
–40 –40	100 200	*–40* *–40*	*210* *390*	0,38	*0.015*	0,51	*0.020*	0,07	*10*	18	*3 600*
–40 –40	100 200	*–40* *–40*	*210* *390*	0,38	*0.015*	0,51	*0.020*	0,07	*10*	18	*3 600*
–40 –40	100 200	*–40* *–40*	*210* *390*	0,13	*0.005*	0,13	*0.005*	0,35	*50*	10	*2 000*
–40 –40	100 200	*–40* *–40*	*210* *390*	0,38	*0.015*	0,51	*0.020*	0,07	*10*	18	*3 600*
–40 –40	100 200	*–40* *–40*	*210* *390*	0,38	*0.015*	0,51	*0.020*	0,07	*10*	18	*3 600*
–40 –40	100 200	*–40* *–40*	*210* *390*	0,13	*0.005*	0,08	*0.003*	0,07	*10*	10	*2 000*
–40	100	*–40*	*210*	0,38	*0.015*	0,25	*0.010*	0,02	*3*	2,54	*500*
–70	250	*–95*	*480*	*	*	*	*	*	*	*	*
–70	250	*–95*	*480*	*	*	*	*	*	*	*	*
–70	250	*–95*	*480*	*	*	*	*	*	*	*	*

Seals for general industrial applications





HMS5 and HMSA10 seals

Main features

SKF metric rubber outside diameter radial shaft seals, HMS5 and HMSA10, are designed in accordance with ISO 6194-1 and DIN 3760 for use in a wide range of industrial applications. The available size range of HMS5 and HMSA10 seals includes a full coverage of the ISO 6194-1 and DIN 3760 dimensions for shaft diameters up to 250 mm *(9.842 in.)* as well as an extensive range of dimensions commonly used in the market. New dimensions are continually added. Main features include:

- optimized sealing lip material
- spring-loaded sealing lip
- optimally balanced sealing lip and flex section
- beaded outside diameter
- auxiliary lip (HMSA10 seals only)

Design

The rubber outside diameter provides optimized sealing ability in the housing, also at considerable surface roughness or in split housings. The beads on the outside diameter provide improved sealing ability and retention in the bore. They also prevent spring-back during installation.

The spring-loaded sealing lip contributes to a quick response in handling dynamic runout and maintaining the sealing performance, even when sealing lip wear is excessive.

Sealing lip and flex section are optimally balanced to withstand both high dynamic runout and shaft-to-bore misalignment.

The auxiliary lip on HMSA10 seals is non-contacting, which means that the seals normally can operate at the same speeds as the single-lip HMS5 seals.

Material

The optimized nitrile rubber compound used for the HMS5 and HSMA10 seals has the designation suffix RG. The compound is the result of long experience and the latest findings from the SKF seal material developments. Advantages of this material include:

- good resistance to ageing
- very good compatibility with synthetic oils
- very good pumping ability
- good wear resistance

Pumping ability is defined as the time it takes for the seal to return a certain amount of oil from the air side to the oil side. The microstructure of SKF's RG nitrile rubber compound promotes rapid pumping of the oil, (**→ table 13**). In **diagram 8**, results from endurance tests show the extended service life of seals made of the optimized nitrile compound.

The complete range of HMS5 and HMSA10 seals is also available in a fluoro rubber compound with a stainless steel garter spring. This rubber compound has the designation suffix V and is used in applications where temperatures exceed the limits of nitrile rubber.

Applications and operating conditions

HMS5 and HMSA10 seals are designed for oil or grease lubricated applications with operating temperatures ranging from –40 to +100 °C *(–40 to +210 °F)*, short-term up to 120 °C *(250 °F)*. These seals are also appropriate for sealing lubricants within a wide range of viscosities.

Circumferential speed: up to 14 m/s *(2 755 ft/min)*
Operating pressure: max 0,05 MPa *(7 psi)*

These values are the maximum value for each service condition and should not occur together. Consideration should be given as to how the operating conditions affect each other. For information on seals under pressure, see **page 69**.

Table 13

Speed Rotating	Circum-ferential	**Pumping time** Standard NBR	SKF compound RG
r/min	m/s	s	
1 000	3,1	–	117
1 500	4,7	280	69
2 000	6,3	186	50
2 500	7,9	130	40
3 000	9,4	102	31
3 500	11,0	82	25
4 000	12,6	68	21
4 500	14,1	57	18

Shaft diameter 60 mm, engine oil SAE 30

Diagram 8

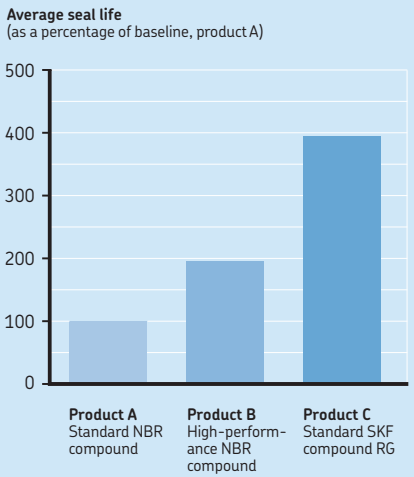

Radial shaft seals – HMS5 and HMSA10
d_1 **6 – 25** mm

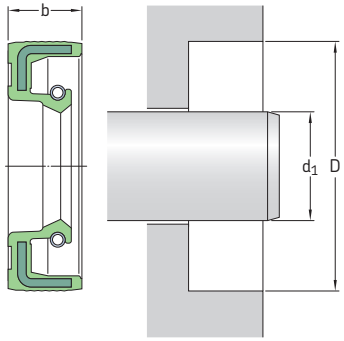

[1] Designation to be followed by the design and material codes, indicating one of the four variants available for each dimension:

HMS5 RG without auxiliary lip, nitrile rubber
HMS5 V without auxiliary lip, fluoro rubber
HMSA10 RG with auxiliary lip, nitrile rubber
HMSA10 V with auxiliary lip, fluoro rubber
Example: **6×16×5 HMSA10 RG**

[2] Design execution differs from the basic design and is indicated by a number, see also **page 89**.

Please see **pages 74** to **76** for housing bore requirements.

Dimensions			Designation[1]	ISO/DIN
Shaft d_1	Bore D	Nominal seal width b		
mm			–	–
6	16	5	**6×16×5**	
	16	7	**6×16×7**	•
	22	7	**6×22×7**	•
7	16	7	**7×16×7**[2]	
	22	7	**7×22×7**	•
8	18	5	**8×18×5**	
	18	7	**8×18×7**	
	22	7	**8×22×7**	•
	24	7	**8×24×7**	•
9	22	7	**9×22×7**	•
10	19	7	**10×19×7**[2]	
	20	6	**10×20×6**	
	20	7	**10×20×7**	
	22	7	**10×22×7**	•
	24	7	**10×24×7**	
	25	7	**10×25×7**	•
	26	7	**10×26×7**	•
	30	7	**10×30×7**	
12	19	5	**12×19×5**[2]	
	22	5	**12×22×5**	
	22	6	**12×22×6**	
	22	7	**12×22×7**	•
	24	7	**12×24×7**	•
	25	7	**12×25×7**	•

Dimensions			Designation[1]	ISO/DIN
Shaft d_1	Bore D	Nominal seal width b		
mm			–	–
12 cont.	28	7	**12×28×7**	
	30	7	**12×30×7**	•
	32	7	**12×32×7**	
	37	7	**12×37×7**	
13	26	7	**13×26×7**	
14	24	7	**14×24×7**	•
	25	5	**14×25×5**	
	28	7	**14×28×7**	
	30	7	**14×30×7**	•
15	24	7	**15×24×7**[2]	
	25	5	**15×25×5**	
	25	6	**15×25×6**	
	26	7	**15×26×7**	•
	30	7	**15×30×7**	•
	32	7	**15×32×7**	
	35	7	**15×35×7**	•
	40	7	**15×40×7**	
	40	10	**15×40×10**	
16	24	7	**16×24×7**[2]	
	28	7	**16×28×7**	
	30	7	**16×30×7**	•
	32	7	**16×32×7**	

Dimensions			Designation[1]	ISO/DIN
Shaft	Bore	Nominal seal width		
d_1	D	b		
mm			–	–
16 cont.	35	7	**16×35×7**	•
17	28	7	**17×28×7**	
	29	5	**17×29×5**	
	30	7	**17×30×7**	
	32	7	**17×32×7**	
	35	7	**17×35×7**	
	37	7	**17×37×7**	
	40	7	**17×40×7**	
	40	10	**17×40×10**	
	47	7	**17×47×7**	
	47	10	**17×47×10**	
18	28	7	**18×28×7**	
	30	6	**18×30×6**	
	30	7	**18×30×7**	•
	32	7	**18×32×7**	
	35	7	**18×35×7**	•
	40	7	**18×40×7**	
19	30	7	**19×30×7**	
	30	8	**19×30×8**	
	32	7	**19×32×7**	
	42	6	**19×42×6**	
20	30	5	**20×30×5**	
	30	7	**20×30×7**	•
	32	6	**20×32×6**	
	32	7	**20×32×7**	
	34	7	**20×34×7**	
	35	6	**20×35×6**	
	35	7	**20×35×7**	•
	35	8	**20×35×8**	
	35	10	**20×35×10**	
	36	7	**20×36×7**	
	38	7	**20×38×7**	
	40	7	**20×40×7**	•
	40	10	**20×40×10**	
	42	7	**20×42×7**	
	42	10	**20×42×10**	
	45	7	**20×45×7**	
	47	7	**20×47×7**	
	47	10	**20×47×10**	
	52	7	**20×52×7**	
	52	10	**20×52×10**	

Dimensions			Designation[1]	ISO/DIN
Shaft	Bore	Nominal seal width		
d_1	D	b		
mm			–	–
21	35	7	**21×35×7**	
	40	7	**21×40×7**	
22	32	7	**22×32×7**	
	35	7	**22×35×7**	•
	36	7	**22×36×7**	
	38	8	**22×38×8**	
	40	7	**22×40×7**	•
	40	10	**22×40×10**	
	42	10	**22×42×10**	
	45	7	**22×45×7**	
	47	7	**22×47×7**	•
23	40	10	**23×40×10**	
24	35	7	**24×35×7**	
	37	7	**24×37×7**	
	40	7	**24×40×7**	
	42	8	**24×42×8**	
	47	7	**24×47×7**	
	50	10	**24×50×10**	
25	35	6	**25×35×6**	
	35	7	**25×35×7**	•
	37	5	**25×37×5**	
	37	6	**25×37×6**	
	37	7	**25×37×7**	
	38	7	**25×38×7**	
	40	5	**25×40×5**	
	40	7	**25×40×7**	•
	40	8	**25×40×8**	
	40	10	**25×40×10**	
	42	6	**25×42×6**	
	42	7	**25×42×7**	
	42	10	**25×42×10**	
25	45	7	**25×45×7**	
	45	8	**25×45×8**	
	45	10	**25×45×10**	
	46	7	**25×46×7**	
	47	7	**25×47×7**	•
	47	10	**25×47×10**	
	50	10	**25×50×10**	
	52	7	**25×52×7**	•
	52	8	**25×52×8**	
	52	10	**25×52×10**	

Radial shaft seals – HMS5 and HMSA10
d_1 **25 – 40** mm

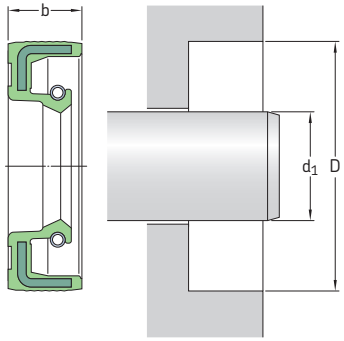

[1] Designation to be followed by the design and material codes, indicating one of the four variants available for each dimension:

HMS5 RG without auxiliary lip, nitrile rubber
HMS5 V without auxiliary lip, fluoro rubber
HMSA10 RG with auxiliary lip, nitrile rubber
HMSA10 V with auxiliary lip, fluoro rubber
Example: **6×16×5 HMSA10 RG**

Please see **pages 74** to **76** for housing bore requirements.

Dimensions			Designation[1]	ISO/DIN
Shaft	Bore	Nominal seal width		
d_1	D	b		
mm			–	–
25	62	7	**25×62×7**	
cont.	62	8	**25×62×8**	
	62	10	**25×62×10**	
	72	7	**25×72×7**	
26	37	7	**26×37×7**	
	38	5	**26×38×5**	
	38	7	**26×38×7**	
	42	7	**26×42×7**	
	47	7	**26×47×7**	
27	37	7	**27×37×7**	
	42	10	**27×42×10**	
	43	7	**27×43×7**	
	47	7	**27×47×7**	
	47	10	**27×47×10**	
28	38	7	**28×38×7**	
	38	8	**28×38×8**	
	40	7	**28×40×7**	•
	40	8	**28×40×8**	
	42	7	**28×42×7**	
	42	8	**28×42×8**	
	44	6	**28×44×6**	
	45	8	**28×45×8**	
	47	7	**28×47×7**	•
	47	10	**28×47×10**	
	52	7	**28×52×7**	•
	52	10	**28×52×10**	

Dimensions			Designation[1]	ISO/DIN
Shaft	Bore	Nominal seal width		
d_1	D	b		
mm			–	–
30	40	7	**30×40×7**	•
	42	6	**30×42×6**	
	42	7	**30×42×7**	•
	42	8	**30×42×8**	
	44	7	**30×44×7**	
	45	7	**30×45×7**	
	45	8	**30×45×8**	
	46	7	**30×46×7**	
	47	6	**30×47×6**	
	47	7	**30×47×7**	•
	47	8	**30×47×8**	
	47	10	**30×47×10**	
	48	8	**30×48×8**	
	50	5	**30×50×5**	
	50	7	**30×50×7**	
	50	8	**30×50×8**	
	50	10	**30×50×10**	
30	52	7	**30×52×7**	•
	52	8	**30×52×8**	
	52	10	**30×52×10**	
	55	7	**30×55×7**	
	55	10	**30×55×10**	
	62	7	**30×62×7**	
	62	10	**30×62×10**	
	72	10	**30×72×10**	
32	42	7	**32×42×7**	
	43	7	**32×43×7**	
	44	7	**32×44×7**	

Dimensions			Designation[1]	ISO/DIN
Shaft	Bore	Nominal seal width		
d_1	D	b		
mm			–	–
32	45	7	**32×45×7**	•
cont.	45	8	**32×45×8**	•
	47	6	**32×47×6**	
	47	7	**32×47×7**	•
	47	8	**32×47×8**	•
	47	10	**32×47×10**	
	48	8	**32×48×8**	
	50	8	**32×50×8**	
	50	10	**32×50×10**	
	52	7	**32×52×7**	•
	52	8	**32×52×8**	•
	55	10	**32×55×10**	
	62	10	**32×62×10**	
	72	7	**32×72×7**	
	80	7	**32×80×7**	
33	45	7	**33×45×7**	
	50	6	**33×50×6**	
34	44	8	**34×44×8**	
	48	8	**34×48×8**	
	52	8	**34×52×8**	
	62	10	**34×62×10**	
35	45	7	**35×45×7**	
	47	6	**35×47×6**	
	47	7	**35×47×7**	•
	47	8	**35×47×8**	•
	48	8	**35×48×8**	
	49	6	**35×49×6**	
	50	7	**35×50×7**	•
	50	8	**35×50×8**	•
	50	10	**35×50×10**	
	52	7	**35×52×7**	•
	52	8	**35×52×8**	•
	52	10	**35×52×10**	
	55	7	**35×55×7**	•
	55	8	**35×55×8**	•
	55	10	**35×55×10**	
	56	10	**35×56×10**	
	58	10	**35×58×10**	
	60	10	**35×60×10**	
	62	7	**35×62×7**	
	62	8	**35×62×8**	
	62	10	**35×62×10**	

Dimensions			Designation[1]	ISO/DIN
Shaft	Bore	Nominal seal width		
d_1	D	b		
mm			–	–
35	72	7	**35×72×7**	
cont.	72	10	**35×72×10**	
	72	12	**35×72×12**	
	80	12	**35×80×12**	
36	47	7	**36×47×7**	
	50	7	**36×50×7**	
	52	7	**36×52×7**	
	58	10	**36×58×10**	
	62	7	**36×62×7**	
37	50	6	**37×50×6**	
38	50	7	**38×50×7**	
	52	7	**38×52×7**	
	52	8	**38×52×8**	
38	54	10	**38×54×10**	
	55	7	**38×55×7**	•
	55	8	**38×55×8**	•
	55	10	**38×55×10**	
	58	8	**38×58×8**	•
	58	10	**38×58×10**	
	60	10	**38×60×10**	
	62	7	**38×62×7**	•
	62	8	**38×62×8**	•
	62	10	**38×62×10**	
	72	10	**38×72×10**	
	80	8	**38×80×8**	
38,5	58	7	**38.5×58×7**	
40	50	8	**40×50×8**	
	52	6	**40×52×6**	
	52	7	**40×52×7**	•
	52	8	**40×52×8**	•
	55	7	**40×55×7**	•
	55	8	**40×55×8**	•
	56	8	**40×56×8**	
	58	7	**40×58×7**	
	58	8	**40×58×8**	
	58	10	**40×58×10**	
	60	8	**40×60×8**	
	60	10	**40×60×10**	
	62	6	**40×62×6**	
	62	7	**40×62×7**	•
	62	8	**40×62×8**	•
	62	10	**40×62×10**	
	65	10	**40×65×10**	
	65	12	**40×65×12**	

Radial shaft seals – HMS5 and HMSA10
d_1 **40 – 65** mm

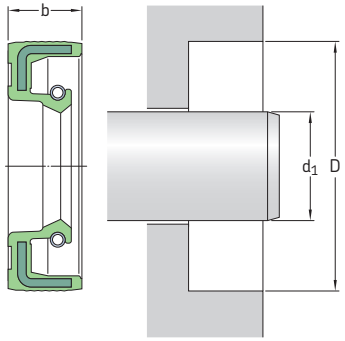

[1] Designation to be followed by the design and material codes, indicating one of the four variants available for each dimension:

HMS5 RG without auxiliary lip, nitrile rubber
HMS5 V without auxiliary lip, fluoro rubber
HMSA10 RG with auxiliary lip, nitrile rubber
HMSA10 V with auxiliary lip, fluoro rubber
Example: **6×16×5 HMSA10 RG**

[2] Design execution differs from the basic design and is indicated by a number, see also **page 89**.

Please see **pages 74** to **76** for housing bore requirements.

Dimensions			Designation[1]	ISO/DIN
Shaft	Bore	Nominal seal width		
d_1	D	b		
mm			–	–
40	68	8	**40×68×8**	
cont.	68	10	**40×68×10**	
	70	8	**40×70×8**	
	72	7	**40×72×7**	
	72	10	**40×72×10**	
	80	8	**40×80×8**	
	80	10	**40×80×10**	
	80	12	**40×80×12**	
	90	10	**40×90×10**	
	90	12	**40×90×12**	
41	56	7	**41×56×7**	
42	53	7	**42×53×7**	
	55	7	**42×55×7**	
	55	8	**42×55×8**	•
	56	7	**42×56×7**	
	60	7	**42×60×7**	
	62	7	**42×62×7**	
	62	8	**42×62×8**	•
	62	10	**42×62×10**	
	65	10	**42×65×10**	
	65	12	**42×65×12**	
	66	10	**42×66×10**	
	67	10	**42×67×10**	
42	72	8	**42×72×8**	
	72	10	**42×72×10**	
43	62	8	**43×62×8**	

Dimensions			Designation[1]	ISO/DIN
Shaft	Bore	Nominal seal width		
d_1	D	b		
mm			–	–
44	60	10	**44×60×10**	
	62	10	**44×62×10**	
	65	10	**44×65×10**	
45	55	7	**45×55×7**	
	58	7	**45×58×7**	
	60	7	**45×60×7**	
	60	8	**45×60×8**	•
	60	10	**45×60×10**	
	62	7	**45×62×7**	
	62	8	**45×62×8**	•
	62	10	**45×62×10**	
	65	8	**45×65×8**	•
	65	10	**45×65×10**	
	68	7	**45×68×7**	
	68	10	**45×68×10**	
	68	12	**45×68×12**	
	72	8	**45×72×8**	
	72	10	**45×72×10**	
	75	8	**45×75×8**	
	75	10	**45×75×10**	
	80	10	**45×80×10**	
	85	10	**45×85×10**	
	100	10	**45×100×10**	
46	59	12	**46×59×12**	
	65	10	**46×65×10**	

Dimensions			Designation[1]	ISO/DIN
Shaft	Bore	Nominal seal width		
d_1	D	b		
mm			–	–
47	65	10	**47×65×10**	
	70	10	**47×70×10**	
	90	10	**47×90×10**	
48	62	8	**48×62×8**	•
	65	10	**48×65×10**	
	68	10	**48×68×10**	
	70	10	**48×70×10**	
	72	7	**48×72×7**	
	72	8	**48×72×8**	
	72	10	**48×72×10**	
50	62	7	**50×62×7**	
	64	6	**50×64×6**	
	65	8	**50×65×8**	•
	65	10	**50×65×10**	
	68	7	**50×68×7**	
	68	8	**50×68×8**	•
	68	10	**50×68×10**	
	70	10	**50×70×10**	
	72	8	**50×72×8**	•
	72	10	**50×72×10**	
	72	12	**50×72×12**	
	75	10	**50×75×10**	
	80	8	**50×80×8**	
	80	10	**50×80×10**	
	85	10	**50×85×10**	
	90	10	**50×90×10**	
	100	10	**50×100×10**	
52	63	8	**52×63×8**	
	65	8	**52×65×8**	
	68	8	**52×68×8**	
	72	8	**52×72×8**	
	72	10	**52×72×10**	
	80	10	**52×80×10**	
	85	10	**52×85×10**	
	100	10	**52×100×10**	
55	68	8	**55×68×8**	
	70	8	**55×70×8**	•
	70	10	**55×70×10**	
	72	8	**55×72×8**	•
	72	10	**55×72×10**	

Dimensions			Designation[1]	ISO/DIN
Shaft	Bore	Nominal seal width		
d_1	D	b		
mm			–	–
55 cont.	75	8	**55×75×8**	
	75	10	**55×75×10**	
	78	10	**55×78×10**	
	78	12	**55×78×12**	
	80	8	**55×80×8**	•
	80	10	**55×80×10**	
	85	8	**55×85×8**	
	85	10	**55×85×10**	
	90	8	**55×90×8**	
	90	10	**55×90×10**	
	100	10	**55×100×10**	
	100	12	**55×100×12**	
56	72	8	**56×72×8**	
57	67	7	**57×67×7**	
58	72	8	**58×72×8**	
	80	8	**58×80×8**	
	80	10	**58×80×10**	
	80	12	**58×80×12**	
60	72	8	**60×72×8**	
	75	8	**60×75×8**	•
	80	7	**60×80×7**	
	80	8	**60×80×8**	•
	80	10	**60×80×10**	
	82	12	**60×82×12**	
	85	8	**60×85×8**	•
	85	10	**60×85×10**	
	90	8	**60×90×8**	
	90	10	**60×90×10**	
	95	10	**60×95×10**	
	100	10	**60×100×10**	
	110	8	**60×110×8**	
	110	8	**60×110×10**	
62	80	10	**62×80×10**	
	85	10	**62×85×10**	
	90	10	**62×90×10**	
63	85	10	**63×85×10**	
	90	10	**63×90×10**	
64	80	8	**64×80×8**	
65	80	8	**65×80×8**	
	85	8	**65×85×8**	
	85	10	**65×85×10**	•
	85	12	**65×85×12**	

Radial shaft seals – HMS5 and HMSA10
d_1 **65 – 190** mm

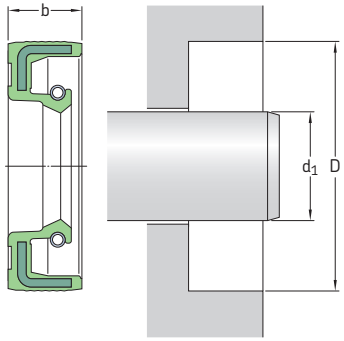

[1] Designation to be followed by the design and material codes, indicating one of the four variants available for each dimension:

HMS5 RG without auxiliary lip, nitrile rubber
HMS5 V without auxiliary lip, fluoro rubber
HMSA10 RG with auxiliary lip, nitrile rubber
HMSA10 V with auxiliary lip, fluoro rubber
Example: **6×16×5 HMSA10 RG**

[2] Design execution differs from the basic design and is indicated by a number, see also **page 89**.

Please see **pages 74** to **76** for housing bore requirements.

Dimensions			Designation[1]	ISO/DIN
Shaft d_1	Bore D	Nominal seal width b		
mm			–	–
65 cont.	88	12	**65×88×12**	
	90	10	**65×90×10**	•
	95	10	**65×95×10**	
	97	7	**65×97×7**	
	100	10	**65×100×10**	
	110	10	**65×110×10**	
	120	12	**65×120×12**	
	140	12	**65×140×12**	
68	90	10	**68×90×10**	
70	85	8	**70×85×8**	
	90	7	**70×90×7**[2]	
	90	10	**70×90×10**	•
	90	12	**70×90×12**	
	92	12	**70×92×12**	
	95	10	**70×95×10**	•
	100	10	**70×100×10**	
	110	10	**70×110×10**	
	110	12	**70×110×12**	
72	90	10	**72×90×10**	
	95	10	**72×95×10**	
	95	12	**72×95×12**	
	100	10	**72×100×10**	
	140	12	**72×140×12**	

Dimensions			Designation[1]	ISO/DIN
Shaft d_1	Bore D	Nominal seal width b		
mm			–	–
75	90	10	**75×90×10**	
	95	10	**75×95×10**	•
	95	12	**75×95×12**	
	100	10	**75×100×10**	•
	100	12	**75×100×12**	
	105	10	**75×105×10**	
	110	12	**75×110×12**	
	120	12	**75×120×12**	
	130	12	**75×130×12**	
78	100	10	**78×100×10**	
80	95	10	**80×95×10**	
	100	10	**80×100×10**	•
	100	12	**80×100×12**	
	105	10	**80×105×10**	
	110	10	**80×110×10**	•
	110	12	**80×110×12**	
	115	12	**80×115×12**	
	125	12	**80×125×12**	
	170	13	**80×170×13**	
82	120	12	**82×120×12**	
	160	15	**82×160×15**	
85	100	9	**85×100×9**	
	100	10	**85×100×10**	
	105	12	**85×105×12**	

Dimensions			Designation[1]	ISO/DIN
Shaft	Bore	Nominal seal width		
d_1	D	b		
mm			–	–
85 cont.	110	12	**85×110×12**	•
	115	12	**85×115×12**	
	120	12	**85×120×12**	•
	130	12	**85×130×12**	
	140	12	**85×140×12**	
	150	12	**85×150×12**	
90	110	10	**90×110×10**	
	110	12	**90×110×12**	•
	115	12	**90×115×12**	
	120	12	**90×120×12**	•
95	110	12	**95×110×12**	
	115	12	**95×115×12**	
	120	12	**95×120×12**	•
	125	12	**95×125×12**	•
	140	12	**95×140×12**	
	145	12	**95×145×12**	
	170	13	**95×170×13**	
100	120	10	**100×120×10**	
	120	12	**100×120×12**	•
	125	12	**100×125×12**	•
	130	12	**100×130×12**	•
	140	12	**100×140×12**	
	145	12	**100×145×12**	
	150	12	**100×150×12**	
105	130	12	**105×130×12**	•
	135	12	**105×135×12**	
	140	12	**105×140×12**	
108	140	15	**108×140×15**	•
	170	15	**108×170×15**	
110	130	12	**110×130×12**	•
	130	13	**110×130×13**	
	140	12	**110×140×12**	•
	150	12	**110×150×12**	
115	140	12	**115×140×12**	•
	145	12	**115×145×12**	
	150	12	**115×150×12**	

Dimensions			Designation[1]	ISO/DIN
Shaft	Bore	Nominal seal width		
d_1	D	b		
mm			–	–
118	150	12	**118×150×12**	
120	140	12	**120×140×12**	
	140	13	**120×140×13**	
	150	12	**120×150×12**	
	160	12	**120×160×12**	
	180	15	**120×180×15**	
125	150	12	**125×150×12**	•
	160	15	**125×160×15**	
	200	15	**125×200×15**	
130	160	12	**130×160×12**	•
	160	15	**130×160×15**	
	170	12	**130×170×12**	
	180	12	**130×180×12**	
	190	12	**130×190×12**	
135	170	12	**135×170×12**	•
140	160	12	**140×160×12**	
	170	12	**140×170×12**	•
	170	15	**140×170×15**	
	180	12	**140×180×12**	
145	175	15	**145×175×15**	•
	180	12	**145×180×12**	
148	170	15	**148×170×15**	
150	170	12	**150×170×12**	
	180	12	**150×180×12**	
	180	15	**150×180×15**	•
	200	12	**150×200×12**	
155	180	15	**155×180×15**	
160	185	15	**160×185×15**	
	190	15	**160×190×15**	•
165	190	15	**165×190×15**	
170	200	15	**170×200×15**	•
175	200	15	**175×200×15**	
180	200	15	**180×200×15**	
	210	15	**180×210×15**	•
190	220	15	**190×220×15**	•
	225	15	**190×225×15**	

Radial shaft seals – HMS5 and HMSA10
d_1 **200 – 250** mm

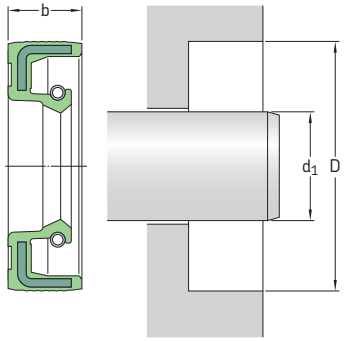

[1] Designation to be followed by the design and material codes, indicating one of the four variants available for each dimension:

HMS5 RG without auxiliary lip, nitrile rubber
HMS5 V without auxiliary lip, fluoro rubber
HMSA10 RG with auxiliary lip, nitrile rubber
HMSA10 V with auxiliary lip, fluoro rubber
Example: **6×16×5 HMSA10 RG**

[2] Design execution differs from the basic design and is indicated by a number, see also **page 89**.

Please see **pages 74** to **76** for housing bore requirements.

Dimensions Shaft d_1	Bore D	Nominal seal width b	**Designation**[1]	**ISO/DIN**
mm			–	–
200	230	15	**200×230×15**	•
210	240	15	**210×240×15**	•
220	250	15	**220×250×15**	•
230	260	15	**230×260×15**	•
240	270	15	**240×270×15**	•
250	280	15	**250×280×15**	•
	285	15	**250×285×15**	

CRW1, CRWA1, CRWH1 and CRWHA1 seals









These radial shaft seals are low-friction seals with SKF Wave lip design for reduced heat generation. See **pages 57** and **58** for more information on SKF Wave lip design. They have a metal outside diameter for easy installation and a firm and accurate fit in the housing bore.

The seals feature SKF Bore Tite Coating on the outside diameter, a non-hardening, water-based acrylic sealant that helps fill small imperfections in the housing bore.

They are primarily designed to retain lubricants but are also suitable for contaminant exclusion, especially the CRWA1 and CRWHA1 seals designed with an auxiliary lip.

CRW1: Seal with a single steel case, SKF Wave lip and a carbon steel garter spring.

CRWH1: Seal with a double steel case, SKF Wave lip and a carbon steel garter spring.

CRWA1: Seal with a single steel case, SKF Wave lip, a carbon steel garter spring and an auxiliary, non-contacting lip.

CRWHA1: Seal with a double steel case, SKF Wave lip, a carbon steel garter spring and an auxiliary, non-contacting lip.

All of these seals are available with sealing lips made of either nitrile rubber or the SKF developed fluoro rubber compound SKF Duralife. Other materials are also available on request.

See **matrix 1** on **pages 90** and **91** for permissible operating conditions.

Radial shaft seals – CRW1, CRWA1, CRWH1 and CRWHA1 – metric dimensions
d_1 **12 – 17** mm

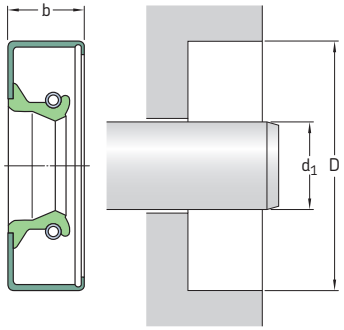

Please see **pages 74** to **76** for housing bore requirements.

Dimensions Shaft d_1	Bore D	Nominal seal width b	**Design and lip material**	**Designation**
mm			–	–
12	22	7	CRW1 V	**12×22×7 CRW1 V**
	22	7	CRW1 R	**12×22×7 CRW1 R**
	25	7	CRW1 R	**12×25×7 CRW1 R**
	26	7	CRW1 R	**12×26×7 CRW1 R**
	28	7	CRW1 R	**12×28×7 CRW1 R**
	28	7	CRW1 P	**12×28×7 CRW1 P**
	32	7	CRW1 R	**12×32×7 CRW1 R**
	32	7	CRW1 V	**12×32×7 CRW1 V**
	35	7	CRW1 R	**12×35×7 CRW1 R**
14	26	7	CRW1 V	**14×26×7 CRW1 V**
	32	7	CRW1 R	**14×32×7 CRW1 R**
15	25	7	CRW1 P	**15×25×7 CRW1 P**
	28	7	CRW1 R	**15×28×7 CRW1 R**
	32	7	CRW1 R	**15×32×7 CRW1 R**
	32	7	CRW1 V	**15×32×7 CRW1 V**
	35	7	CRW1 R	**15×35×7 CRW1 R**
	35	7	CRW1 P	**15×35×7 CRW1 P**
16	28	7	CRW1 R	**16×28×7 CRW1 R**
	30	7	CRW1 R	**16×30×7 CRW1 R**
	32	7	CRW1 R	**16×32×7 CRW1 R**
	35	7	CRW1 R	**16×35×7 CRW1 R**
	40	7	CRW1 R	**16×40×7 CRW1 R**
	40	7	CRWA1 R	**16×40×7 CRWA1 R**
17	27	6,35	CRW1 R	**17×27×6 CRW1 R**
	28	7	CRW1 R	**17×28×7 CRW1 R**
	28	7	CRW1 V	**17×28×7 CRW1 V**
	30	7	CRW1 R	**17×30×7 CRW1 R**
	32	7	CRW1 R	**17×32×7 CRW1 R**
	35	7	CRW1 R	**17×35×7 CRW1 R**
	35	7	CRW1 V	**17×35×7 CRW1 V**
	40	7	CRW1 R	**17×40×7 CRW1 R**
	47	7	CRW1 R	**17×47×7 CRW1 R**

Radial shaft seals – CRW1, CRWA1, CRWH1 and CRWHA1 – metric dimensions
d_1 **18 – 28** mm

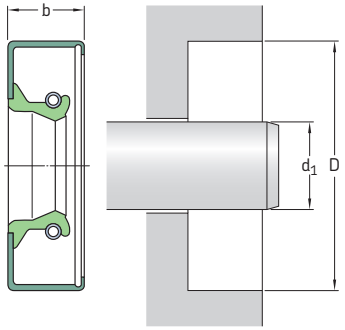

Please see **pages 74** to **76** for housing bore requirements.

Dimensions Shaft d_1	Bore D	Nominal seal width b	**Design and lip material**	**Designation**
mm			–	–
18	30	7	CRW1 R	**18×30×7 CRW1 R**
	30	7	CRW1 V	**18×30×7 CRW1 V**
	32	7	CRW1 R	**18×32×7 CRW1 R**
	32	7	CRW1 V	**18×32×7 CRW1 V**
	35	7	CRW1 R	**18×35×7 CRW1 R**
	40	7	CRW1 R	**18×40×7 CRW1 R**
19	35	7	CRW1 R	**19×35×7 CRW1 R**
20	30	7	CRW1 R	**20×30×7 CRW1 R**
	31	7	CRW1 R	**20×31×7 CRW1 R**
	32	7	CRW1 R	**20×32×7 CRW1 R**
	35	7	CRW1 R	**20×35×7 CRW1 R**
	35	7	CRW1 V	**20×35×7 CRW1 V**
	36	7	CRW1 R	**20×36×7 CRW1 R**
	36	7	CRW1 V	**20×36×7 CRW1 V**
	37	7	CRW1 R	**20×37×7 CRW1 R**
	38	7	CRW1 R	**20×38×7 CRW1 R**
	40	7	CRW1 R	**20×40×7 CRW1 R**
	40	7	CRW1 V	**20×40×7 CRW1 V**
	42	7	CRW1 R	**20×42×7 CRW1 R**
	47	7	CRW1 R	**20×47×7 CRW1 R**
	52	7	CRW1 R	**20×52×7 CRW1 R**
	52	7	CRW1 P	**20×52×7 CRW1 P**
21	35	7	CRW1 R	**21×35×7 CRW1 R**
	35	7	CRW1 V	**21×35×7 CRW1 V**
	40	8	CRW1 R	**21×40×8 CRW1 R**

Dimensions			Design and lip material	Designation
Shaft	Bore	Nominal seal width		
d_1	D	b		
mm			–	–
22	31	7	CRW1 P	**22×31×7 CRW1 P**
	32	7	CRW1 R	**22×32×7 CRW1 R**
	35	7	CRW1 R	**22×35×7 CRW1 R**
	35	7	CRW1 V	**22×35×7 CRW1 V**
	38	7	CRW1 R	**22×38×7 CRW1 R**
	38	7	CRW1 V	**22×38×7 CRW1 V**
	40	6,35	CRW1 R	**22×40×6 CRW1 R**
	40	6,35	CRW1 V	**22×40×6 CRW1 V**
	42	7	CRW1 R	**22×42×7 CRW1 R**
	47	8	CRW1 R	**22×47×8 CRW1 R**
	50	8	CRW1 R	**22×50×8 CRW1 R**
24	36	7	CRW1 V	**24×36×7 CRW1 V**
	38	7	CRW1 V	**24×38×7 CRW1 V**
	47	8	CRW1 R	**24×47×8 CRW1 R**
25	35	7	CRW1 R	**25×35×7 CRW1 R**
	35	7	CRW1 V	**25×35×7 CRW1 V**
	36	7	CRW1 R	**25×36×7 CRW1 R**
	37	7	CRW1 R	**25×37×7 CRW1 R**
	37	7	CRW1 V	**25×37×7 CRW1 V**
	38	7	CRW1 R	**25×38×7 CRW1 R**
	38	7	CRW1 V	**25×38×7 CRW1 V**
	40	7	CRW1 R	**25×40×7 CRW1 R**
	40	7	CRW1 R	**25×40×7 CRW1 R**
	40	7	CRW1 V	**25×40×7 CRW1 V**
	42	8	CRW1 V	**25×42×8 CRW1 V**
	42	8	CRW1 R	**25×42×8 CRW1 R**
	45	7	CRW1 R	**25×45×7 CRW1 R**
	47	6,35	CRW1 R	**25×47×6 CRW1 R**
	48	8	CRW1 R	**25×48×8 CRW1 R**
	48	8	CRW1 V	**25×48×8 CRW1 V**
	50	8	CRW1 R	**25×50×8 CRW1 R**
	52	8	CRW1 R	**25×52×8 CRW1 R**
	52	8	CRW1 V	**25×52×8 CRW1 V**
	62	7	CRW1 R	**25×62×7 CRW1 R**
	62	7	CRW1 V	**25×62×7 CRW1 V**
27	42	7	CRW1 R	**27×42×7 CRW1 R**
	42	7	CRW1 V	**27×42×7 CRW1 V**
	43	8	CRW1 V	**27×43×8 CRW1 V**
	45	8	CRW1 V	**27×45×8 CRW1 V**
	52	8	CRW1 R	**27×52×8 CRW1 R**
28	40	7	CRW1 R	**28×40×7 CRW1 R**
	40	7	CRW1 V	**28×40×7 CRW1 V**
	42	7	CRW1 R	**28×42×7 CRW1 R**
	42	7	CRW1 V	**28×42×7 CRW1 V**
	45	7	CRW1 V	**28×45×7 CRW1 V**
	47	7	CRW1 V	**28×47×7 CRW1 V**
	47	8	CRW1 R	**28×47×8 CRW1 R**
	52	8	CRW1 R	**28×52×8 CRW1 R**

Radial shaft seals – CRW1, CRWA1, CRWH1 and CRWHA1 – metric dimensions
d_1 **30 – 36** mm

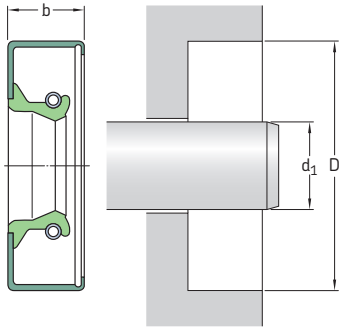

Please see **pages 74** to **76** for housing bore requirements.

Dimensions Shaft d_1	Bore D	Nominal seal width b	**Design and lip material**	**Designation**
mm			–	–
30	40	7	CRW1 R	**30×40×7 CRW1 R**
	40	7	CRW1 V	**30×40×7 CRW1 V**
	42	7	CRW1 R	**30×42×7 CRW1 R**
	42	7	CRW1 V	**30×42×7 CRW1 V**
	45	8	CRW1 R	**30×45×8 CRW1 R**
	45	8	CRW1 P	**30×45×8 CRW1 P**
	47	7	CRW1 R	**30×47×7 CRW1 R**
	47	8	CRW1 V	**30×47×8 CRW1 V**
	48	8	CRW1 R	**30×48×8 CRW1 R**
	50	8	CRW1 R	**30×50×8 CRW1 R**
	50	8	CRW1 V	**30×50×8 CRW1 V**
	52	8	CRW1 R	**30×52×8 CRW1 R**
	55	7	CRW1 R	**30×55×7 CRW1 R**
	56	8	CRW1 R	**30×56×8 CRW1 R**
	58	8	CRWA1 R	**30×58×8 CRWA1 R**
	60	8	CRW1 R	**30×60×8 CRW1 R**
	62	7	CRW1 R	**30×62×7 CRW1 R**
	62	7	CRW1 V	**30×62×7 CRW1 V**
	72	8	CRW1 R	**30×72×8 CRW1 R**
	72	12	CRWA1 V	**30×72×12 CRWA1 V**
32	42	7	CRW1 R	**32×42×7 CRW1 R**
	42	7	CRW1 V	**32×42×7 CRW1 V**
	45	8	CRW1 R	**32×45×8 CRW1 R**
	47	8	CRW1 R	**32×47×8 CRW1 R**
	47	8	CRW1 V	**32×47×8 CRW1 V**
	48	8	CRW1 R	**32×48×8 CRW1 R**
	48	8	CRW1 V	**32×48×8 CRW1 V**
	50	8	CRW1 R	**32×50×8 CRW1 R**
	50	8	CRW1 V	**32×50×8 CRW1 V**
	52	8	CRW1 R	**32×52×8 CRW1 R**
	52	8	CRW1 V	**32×52×8 CRW1 V**

Dimensions Shaft d_1	Bore D	Nominal seal width b	Design and lip material	Designation
mm			–	–
32	56	8	CRW1 R	**32×56×8 CRW1 R**
cont.	62	6,35	CRW1 R	**32×62×6 CRW1 R**
34	48	8	CRW1 R	**34×48×8 CRW1 R**
	48	8	CRW1 V	**34×48×8 CRW1 V**
	55	8	CRW1 R	**34×55×8 CRW1 R**
	56	8	CRW1 R	**34×56×8 CRW1 R**
	56	8	CRW1 V	**34×56×8 CRW1 V**
	62	8	CRW1 R	**34×62×8 CRW1 R**
35	47	7	CRW1 R	**35×47×7 CRW1 R**
	47	7	CRW1 V	**35×47×7 CRW1 V**
	48	8	CRW1 R	**35×48×8 CRW1 R**
	48	8	CRW1 V	**35×48×8 CRW1 V**
	50	8	CRW1 R	**35×50×8 CRW1 R**
	50	8	CRW1 V	**35×50×8 CRW1 V**
	52	8	CRWA1 P	**35×52×8 CRWA1 P**
	52	8	CRW1 R	**35×52×8 CRW1 R**
	52	8	CRWA1 R	**35×52×8 CRWA1 R**
	54	7	CRW1 R	**35×54×7 CRW1 R**
	54	8	CRW1 V	**35×54×8 CRW1 V**
	55	8	CRW1 R	**35×55×8 CRW1 R**
	55	8	CRW1 V	**35×55×8 CRW1 V**[1]
	56	8	CRW1 R	**35×56×8 CRW1 R**
	56	8	CRW1 V	**35×56×8 CRW1 V**
	62	8	CRW1 V	**35×62×8 CRW1 V**
	62	8	CRW1 R	**35×62×8 CRW1 R**
	64	8	CRW1 R	**35×64×8 CRW1 R**
	65	8	CRW1 V	**35×65×8 CRW1 V**
	68	8	CRW1 R	**35×68×8 CRW1 R**
	68	8	CRW1 V	**35×68×8 CRW1 V**
	69	8	CRW1 R	**35×69×8 CRW1 R**
	72	8	CRW1 V	**35×72×8 CRW1 V**
	72	8	CRW1 R	**35×72×8 CRW1 R**
	72	8	CRWA1 R	**35×72×8 CRWA1 R**
	78	8	CRW1 R	**35×78×8 CRW1 R**
	80	8	CRW1 R	**35×80×8 CRW1 R**
36	50	7	CRW1 R	**36×50×7 CRW1 R**
	50	8	CRW1 R	**36×50×8 CRW1 R**
	52	8	CRW1 R	**36×52×8 CRW1 R**
	52	8	CRW1 V	**36×52×8 CRW1 V**
	54	8	CRW1 R	**36×54×8 CRW1 R**
	54	8	CRW1 V	**36×54×8 CRW1 V**
	58	8	CRW1 R	**36×58×8 CRW1 R**
	60	8	CRW1 R	**36×60×8 CRW1 R**
	60	8	CRW1 V	**36×60×8 CRW1 V**
	62	8	CRW1 R	**36×62×8 CRW1 R**
	65	8	CRW1 R	**36×65×8 CRW1 R**
	68	8	CRW1 R	**36×68×8 CRW1 R**

[1] Without SKF Bore Tite Coating

Radial shaft seals – CRW1, CRWA1, CRWH1 and CRWHA1 – metric dimensions
d_1 **38 – 43** mm

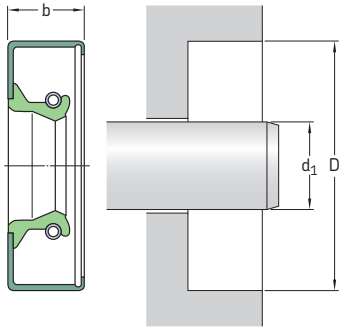

Please see **pages 74** to **76** for housing bore requirements.

Dimensions Shaft d_1	Bore D	Nominal seal width b	**Design and lip material**	**Designation**
mm			–	–
38	50	7	CRW1 R	**38×50×7 CRW1 R**
	50	7	CRW1 V	**38×50×7 CRW1 V**
	52	8	CRW1 R	**38×52×8 CRW1 R**
	52	8	CRWA1 R	**38×52×8 CRWA1 R**
	52	8	CRW1 V	**38×52×8 CRW1 V**
	53	8	CRW1 R	**38×53×8 CRW1 R**
	54	7	CRW1 P	**38×54×7 CRW1 P**[1]
	55	8	CRW1 R	**38×55×8 CRW1 R**
	55	8	CRW1 V	**38×55×8 CRW1 V**
	56	8	CRW1 V	**38×56×8 CRW1 V**
	56	8	CRW1 R	**38×56×8 CRW1 R**
	58	8	CRW1 R	**38×58×8 CRW1 R**
	58	8	CRW1 V	**38×58×8 CRW1 V**
	60	8	CRW1 R	**38×60×8 CRW1 R**
	60	8	CRW1 V	**38×60×8 CRW1 V**
	62	8	CRW1 R	**38×62×8 CRW1 R**
	62	8	CRWA1 R	**38×62×8 CRWA1 R**
	62	8	CRW1 V	**38×62×8 CRW1 V**
	65	8	CRW1 R	**38×65×8 CRW1 R**
	68	8	CRW1 R	**38×68×8 CRW1 R**
	70	8	CRW1 R	**38×70×8 CRW1 R**
	72	8	CRW1 R	**38×72×8 CRW1 R**
	73	8	CRW1 R	**38×73×8 CRW1 R**
	74	11	CRWA1 R	**38×74×11 CRWA1 R**
	74	11	CRW1 V	**38×74×11 CRW1 V**
	80	8	CRW1 R	**38×80×8 CRW1 R**
	90	8	CRWA1 R	**38×90×8 CRWA1 R**

[1] Without SKF Bore Tite Coating

Dimensions			Design and lip material	Designation
Shaft	Bore	Nominal seal width		
d_1	D	b		
mm			–	–
40	52	7	CRW1 V	**40×52×7 CRW1 V**
	52	7	CRW1 R	**40×52×7 CRW1 R**
	54	7	CRW1 R	**40×54×7 CRW1 R**
	55	8	CRW1 R	**40×55×8 CRW1 R**
	55	8	CRW1 V	**40×55×8 CRW1 V**
	56	7	CRW1 V	**40×56×7 CRW1 V**
	56	8	CRW1 R	**40×56×8 CRW1 R**
	57	8	CRW1 R	**40×57×8 CRW1 R**
	58	8	CRW1 R	**40×58×8 CRW1 R**
	58	8	CRW1 V	**40×58×8 CRW1 V**
	60	8	CRW1 R	**40×60×8 CRW1 R**
	60	8	CRW1 V	**40×60×8 CRW1 V**
	62	8	CRW1 R	**40×62×8 CRW1 R**
	62	8	CRW1 V	**40×62×8 CRW1 V**
	65	8	CRW1 R	**40×65×8 CRW1 R**
	68	8	CRW1 R	**40×68×8 CRW1 R**
	70	8	CRW1 R	**40×70×8 CRW1 R**
	72	8	CRW1 R	**40×72×8 CRW1 R**
	74	8	CRW1 R	**40×74×8 CRW1 R**
	75	8	CRW1 V	**40×75×8 CRW1 V**
	80	8	CRW1 R	**40×80×8 CRW1 R**
	80	8	CRW1 V	**40×80×8 CRW1 V**[1)]
	90	8	CRW1 R	**40×90×8 CRW1 R**
41	53	7	CRW1 R	**41×53×7 CRW1 R**
	55	8	CRW1 R	**41×55×8 CRW1 R**
	62	8	CRW1 R	**41×62×8 CRW1 R**
42	55	8	CRW1 R	**42×55×8 CRW1 R**
	55	8	CRW1 V	**42×55×8 CRW1 V**
	56	7	CRW1 V	**42×56×7 CRW1 V**
	56	8	CRW1 R	**42×56×8 CRW1 R**
	58	8	CRW1 R	**42×58×8 CRW1 R**
	58	8	CRW1 V	**42×58×8 CRW1 V**
	60	8	CRW1 R	**42×60×8 CRW1 R**
	60	8	CRW1 V	**42×60×8 CRW1 V**
	62	8	CRW1 R	**42×62×8 CRW1 R**
	62	8	CRW1 V	**42×62×8 CRW1 V**
	65	8	CRW1 R	**42×65×8 CRW1 R**
	65	8	CRW1 V	**42×65×8 CRW1 V**
	72	8	CRW1 V	**42×72×8 CRW1 V**
	72	8	CRW1 R	**42×72×8 CRW1 R**
43	57	8	CRW1 R	**43×57×8 CRW1 R**
	60	8	CRW1 R	**43×60×8 CRW1 R**
	69	8	CRW1 R	**43×69×8 CRW1 R**
	73	8	CRW1 R	**43×73×8 CRW1 R**

[1)] Without SKF Bore Tite Coating

Radial shaft seals – CRW1, CRWA1, CRWH1 and CRWHA1 – metric dimensions
d_1 **44 – 54** mm

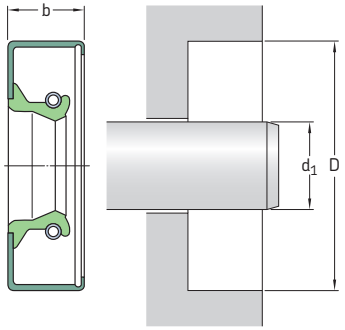

Please see **pages 74** to **76** for housing bore requirements.

Dimensions Shaft d_1	Bore D	Nominal seal width b	**Design and lip material**	**Designation**
mm			–	–
44	60	8	CRW1 R	**44×60×8 CRW1 R**
	60	8	CRW1 V	**44×60×8 CRW1 V**[1]
	62	8	CRW1 R	**44×62×8 CRW1 R**
	65	8	CRW1 R	**44×65×8 CRW1 R**
	68	8	CRW1 V	**44×68×8 CRW1 V**
	70	8	CRW1 R	**44×70×8 CRW1 R**
	72	8	CRW1 R	**44×72×8 CRW1 R**
45	60	8	CRW1 R	**45×60×8 CRW1 R**
	60	8	CRW1 V	**45×60×8 CRW1 V**
	62	8	CRWA1 V	**45×62×8 CRWA1 V**
	62	8	CRW1 R	**45×62×8 CRW1 R**
	65	8	CRW1 R	**45×65×8 CRW1 R**
	65	8	CRW1 V	**45×65×8 CRW1 V**
	68	8	CRW1 R	**45×68×8 CRW1 R**
	68	8	CRW1 V	**45×68×8 CRW1 V**
	68	8	CRWA1 R	**45×68×8 CRWA1 R**
	72	8	CRW1 V	**45×72×8 CRW1 V**
	72	8	CRW1 R	**45×72×8 CRW1 R**
	75	8	CRW1 R	**45×75×8 CRW1 R**
	75	8	CRW1 V	**45×75×8 CRW1 V**
	80	8	CRW1 R	**45×80×8 CRW1 R**
	85	8	CRW1 R	**45×85×8 CRW1 R**
46	60	8	CRW1 R	**46×60×8 CRW1 R**
	65	8	CRW1 R	**46×65×8 CRW1 R**
	68	8	CRW1 R	**46×68×8 CRW1 R**
	72	8	CRW1 R	**46×72×8 CRW1 R**
	73	8	CRW1 R	**46×73×8 CRW1 R**

[1] Without SKF Bore Tite Coating

Dimensions			Design and lip material	Designation
Shaft	Bore	Nominal seal width		
d_1	D	b		
mm			–	–
47	60	7	CRW1 R	**47×60×7 CRW1 R**
	62	8	CRW1 R	**47×62×8 CRW1 R**
	72	8	CRW1 R	**47×72×8 CRW1 R**
48	62	8	CRW1 R	**48×62×8 CRW1 R**
	62	8	CRW1 P	**48×62×8 CRW1 P**
	65	8	CRW1 R	**48×65×8 CRW1 R**
	65	8	CRW1 V	**48×65×8 CRW1 V**
	68	8	CRW1 V	**48×68×8 CRW1 V**
	70	8	CRW1 R	**48×70×8 CRW1 R**
	70	8	CRW1 V	**48×70×8 CRW1 V**
	72	8	CRW1 R	**48×72×8 CRW1 R**
	72	8	CRW1 V	**48×72×8 CRW1 V**
	80	8	CRW1 R	**48×80×8 CRW1 R**
50	65	8	CRW1 R	**50×65×8 CRW1 R**
	65	8	CRW1 V	**50×65×8 CRW1 V**
	68	8	CRW1 R	**50×68×8 CRW1 R**
	68	8	CRW1 V	**50×68×8 CRW1 V**
	70	8	CRW1 R	**50×70×8 CRW1 R**
	70	8	CRW1 V	**50×70×8 CRW1 V**
	72	8	CRW1 R	**50×72×8 CRW1 R**
	72	8	CRW1 V	**50×72×8 CRW1 V**
	75	8	CRWA1 R	**50×75×8 CRWA1 R**
	80	8	CRW1 R	**50×80×8 CRW1 R**
	80	8	CRW1 V	**50×80×8 CRW1 V**
	82	8	CRWA1 R	**50×82×8 CRWA1 R**
	85	8	CRW1 R	**50×85×8 CRW1 R**
	90	8	CRW1 R	**50×90×8 CRW1 R**
	90	8	CRW1 V	**50×90×8 CRW1 V**
51	65	7	CRWA1 R	**51×65×7 CRWA1 R**
	73	8	CRW1 R	**51×73×8 CRW1 R**
	80	9,53	CRW1 R	**51×80×10 CRW1 R**
	81	9,53	CRWH1 R	**51×81×10 CRWH1 R**
	81	9,53	CRWHA1 R	**51×81×10 CRWHA1 R**
	92	11,13	CRWH1 R	**51×92×11 CRWH1 R**
52	68	8	CRW1 R	**52×68×8 CRW1 R**
	68	8	CRW1 V	**52×68×8 CRW1 V**
	70	8	CRW1 R	**52×70×8 CRW1 R**
	72	8	CRWA1 V	**52×72×8 CRWA1 V**
	72	8	CRW1 R	**52×72×8 CRW1 R**
	72	8	CRW1 V	**52×72×8 CRW1 V**
	85	8	CRW1 R	**52×85×8 CRW1 R**
53	68	8	CRW1 V	**53×68×8 CRW1 V**
54	65	8	CRW1 R	**54×65×8 CRW1 R**
	65	8	CRW1 V	**54×65×8 CRW1 V**
	73	11,13	CRW1 R	**54×73×11 CRW1 R**
	73	11,13	CRWA1 R	**54×73×11 CRWA1 R**
	81	9,53	CRWA1 R	**54×81×10 CRWA1 R**

Radial shaft seals – CRW1, CRWA1, CRWH1 and CRWHA1 – metric dimensions
d_1 **55 – 70** mm

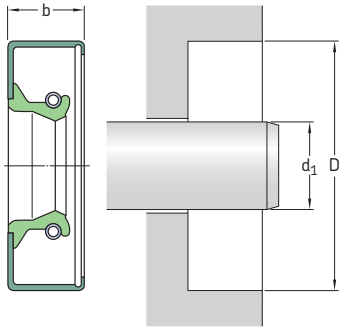

Please see **pages 74** to **76** for housing bore requirements.

Dimensions Shaft d_1	Bore D	Nominal seal width b	**Design and lip material**	**Designation**
mm			–	–
55	70	8	CRW1 R	**55×70×8 CRW1 R**
	70	8	CRW1 V	**55×70×8 CRW1 V**
	72	8	CRW1 R	**55×72×8 CRW1 R**
	72	8	CRW1 V	**55×72×8 CRW1 V**
	73	8	CRW1 V	**55×73×8 CRW1 V**
	75	8	CRW1 R	**55×75×8 CRW1 R**
	75	8	CRW1 V	**55×75×8 CRW1 V**
	80	8	CRW1 R	**55×80×8 CRW1 R**
	80	8	CRW1 V	**55×80×8 CRW1 V**
	85	8	CRW1 R	**55×85×8 CRW1 R**
	90	8	CRW1 R	**55×90×8 CRW1 R**
	100	8	CRW1 R	**55×100×8 CRW1 R**
56	75	8	CRW1 R	**56×75×8 CRW1 R**
57	81	11	CRW1 R	**57×81×11 CRW1 R**
	81	11	CRWA1 P	**57×81×11 CRWA1 P**
	92	11	CRWH1 R	**57×92×11 CRWH1 R**
	92	11	CRWHA1 R	**57×92×11 CRWHA1 R**
58	72	8	CRW1 R	**58×72×8 CRW1 R**
	72	8	CRW1 S	**58×72×8 CRW1 S**
	75	8	CRW1 R	**58×75×8 CRW1 R**
	80	8	CRW1 R	**58×80×8 CRW1 R**
	80	8	CRW1 V	**58×80×8 CRW1 V**
	85	8	CRW1 R	**58×85×8 CRW1 R**
	90	8	CRW1 R	**58×90×8 CRW1 R**

Dimensions			Design and lip material	Designation
Shaft	Bore	Nominal seal width		
d_1	D	b		
mm			–	–
60	75	8	CRW1 R	**60×75×8 CRW1 R**
	75	8	CRW1 V	**60×75×8 CRW1 V**
	80	8	CRW1 R	**60×80×8 CRW1 R**
	80	8	CRW1 V	**60×80×8 CRW1 V**
	82	8	CRWA1 R	**60×82×8 CRWA1 R**
	85	8	CRW1 V	**60×85×8 CRW1 V**
	85	8	CRW1 R	**60×85×8 CRW1 R**
	90	8	CRW1 R	**60×90×8 CRW1 R**
	105	8	CRW1 R	**60×105×8 CRW1 R**
	110	8	CRW1 R	**60×110×8 CRW1 R**
62	80	8	CRW1 V	**62×80×8 CRW1 V**
	85	8	CRW1 R	**62×85×8 CRW1 R**
	90	8	CRW1 R	**62×90×8 CRW1 R**
	90	11,13	CRWH1 R	**62×90×11 CRWH1 R**
63	78	8	CRW1 R	**63×78×8 CRW1 R**
	80	8	CRW1 R	**63×80×8 CRW1 R**
	85	8	CRW1 R	**63×85×8 CRW1 R**
	88	8	CRW1 R	**63×88×8 CRW1 R**
65	80	8	CRW1 R	**65×80×8 CRW1 R**
	80	8	CRW1 V	**65×80×8 CRW1 V**
	85	8	CRW1 R	**65×85×8 CRW1 R**
	85	8	CRW1 V	**65×85×8 CRW1 V**
	88	8	CRW1 R	**65×88×8 CRW1 R**
	90	8	CRW1 R	**65×90×8 CRW1 R**
	90	8	CRW1 V	**65×90×8 CRW1 V**
	92	11,13	CRWH1 R	**65×92×11 CRWH1 R**
	100	8	CRW1 R	**65×100×8 CRW1 R**
	100	8	CRW1 V	**65×100×8 CRW1 V**
	110	10	CRW1 R	**65×110×10 CRW1 R**
	120	8	CRW1 R	**65×120×8 CRW1 R**
68	85	8	CRW1 R	**68×85×8 CRW1 R**
	88	8	CRW1 R	**68×88×8 CRW1 R**
	90	8	CRW1 R	**68×90×8 CRW1 R**
	90	8	CRW1 V	**68×90×8 CRW1 V**
	95	10	CRW1 R	**68×95×10 CRW1 R**
	95	10	CRW1 V	**68×95×10 CRW1 V**
	100	10	CRW1 R	**68×100×10 CRW1 R**
70	85	8	CRW1 R	**70×85×8 CRW1 R**
	88	8	CRW1 R	**70×88×8 CRW1 R**
	88	8	CRW1 V	**70×88×8 CRW1 V**
	90	8	CRW1 R	**70×90×8 CRW1 R**
	90	10	CRW1 V	**70×90×10 CRW1 V**
	90	10	CRWHA1 P	**70×90×10 CRWHA1 P**
	92	11	CRWH1 R	**70×92×11 CRWH1 R**
	92	11	CRWH1 V	**70×92×11 CRWH1 V**
	95	10	CRW1 R	**70×95×10 CRW1 R**
	100	10	CRW1 R	**70×100×10 CRW1 R**
	105	10	CRW1 R	**70×105×10 CRW1 R**

Radial shaft seals – CRW1, CRWA1, CRWH1 and CRWHA1 – metric dimensions
d_1 **70 – 110** mm

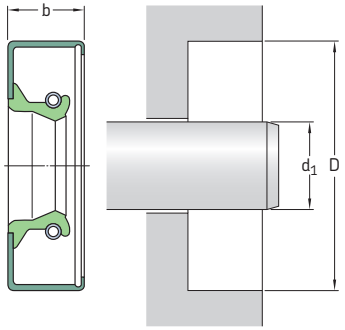

Please see **pages 74** to **76** for housing bore requirements.

Dimensions Shaft d_1	Bore D	Nominal seal width b	**Design and lip material**	**Designation**
mm			–	–
70	110	10	CRW1 R	**70×110×10 CRW1 R**
cont.	110	12,70	CRWHA1 R	**70×110×13 CRWHA1 R**[1]
72	88	8	CRW1 R	**72×88×8 CRW1 R**
73	92	11,13	CRWH1 R	**73×92×11 CRWH1 R**
	110	11,13	CRWA1 P	**73×110×11 CRWA1 P**
75	90	8	CRW1 R	**75×90×8 CRW1 R**
	95	10	CRW1 R	**75×95×10 CRW1 R**
	95	10	CRW1 V	**75×95×10 CRW1 V**
	100	10	CRW1 R	**75×100×10 CRW1 R**
	100	10	CRW1 V	**75×100×10 CRW1 V**
	105	10	CRW1 R	**75×105×10 CRW1 R**
	110	10	CRW1 R	**75×110×10 CRW1 R**
	115	12	CRW1 R	**75×115×12 CRW1 R**
80	100	10	CRW1 R	**80×100×10 CRW1 R**
	100	10	CRW1 V	**80×100×10 CRW1 V**
	105	10	CRW1 R	**80×105×10 CRW1 R**
	105	10	CRW1 V	**80×105×10 CRW1 V**
	110	10	CRW1 R	**80×110×10 CRW1 R**
	125	10	CRW1 R	**80×125×10 CRW1 R**
	125	10	CRW1 V	**80×125×10 CRW1 V**
	130	12	CRWA1 R	**80×130×12 CRWA1 R**
	140	12	CRW1 R	**80×140×12 CRW1 R**
84	127	11	CRWH1 R	**84×127×11 CRWH1 R**

[1] Without SKF Bore Tite Coating

Dimensions			Design and lip material	Designation
Shaft	Bore	Nominal seal width		
d_1	D	b		
mm			–	–
85	105	10	CRW1 R	**85×105×10 CRW1 R**
	105	10	CRW1 V	**85×105×10 CRW1 V**
	110	10	CRW1 R	**85×110×10 CRW1 R**
	110	10	CRWA1 V	**85×110×10 CRWA1 V**
	120	12	CRW1 R	**85×120×12 CRW1 R**
	130	12	CRW1 R	**85×130×12 CRW1 R**
89	127	11,13	CRWH1 R	**89×127×11 CRWH1 R**
90	110	12	CRW1 R	**90×110×12 CRW1 R**
	110	12	CRW1 V	**90×110×12 CRW1 V**
	115	12	CRWA1 R	**90×115×12 CRWA1 R**
	120	12	CRW1 R	**90×120×12 CRW1 R**
	120	12	CRW1 V	**90×120×12 CRW1 V**
	125	12	CRW1 R	**90×125×12 CRW1 R**
	125	12	CRW1 V	**90×125×12 CRW1 V**
	130	12	CRW1 R	**90×130×12 CRW1 R**
	140	12	CRWA1 R	**90×140×12 CRWA1 R**
92	127	11	CRWHA1 R	**92×127×11 CRWHA1 R**
	127	11,13	CRWH1 R	**92×127×11 CRWH1 R**
95	110	10	CRW1 R	**95×110×10 CRW1 R**
	115	12	CRW1 R	**95×115×12 CRW1 R**
	115	12	CRW1 V	**95×115×12 CRW1 V**
	120	12	CRW1 R	**95×120×12 CRW1 R**
	120	12	CRW1 V	**95×120×12 CRW1 V**
	120	12	CRWA1 V	**95×120×12 CRWA1 V**
	125	12	CRW1 R	**95×125×12 CRW1 R**
	130	12	CRW1 R	**95×130×12 CRW1 R**
	130	12	CRW1 V	**95×130×12 CRW1 V**
98	120	12	CRW1 V	**98×120×12 CRW1 V**
100	120	12	CRW1 R	**100×120×12 CRW1 R**
	120	12	CRW1 V	**100×120×12 CRW1 V**
	125	12	CRW1 R	**100×125×12 CRW1 R**
	125	12	CRW1 V	**100×125×12 CRW1 V**
	127	11,13	CRWH1 R	**100×127×11 CRWH1 R**
	130	12	CRW1 R	**100×130×12 CRW1 R**
	135	12	CRWA1 R	**100×135×12 CRWA1 R**
	140	12	CRWA1 R	**100×140×12 CRWA1 R**
105	127	11,13	CRWH1 R	**105×127×11 CRWH1 R**
	130	12	CRW1 R	**105×130×12 CRW1 R**
	130	12	CRW1 V	**105×130×12 CRW1 V**
	135	12	CRWA1 R	**105×135×12 CRWA1 R**
	140	12	CRWA1 R	**105×140×12 CRWA1 R**
	160	12	CRW1 R	**105×160×12 CRW1 R**
110	130	12	CRW1 R	**110×130×12 CRW1 R**
	130	12	CRW1 V	**110×130×12 CRW1 V**
	135	12	CRW1 V	**110×135×12 CRW1 V**
	140	12	CRW1 V	**110×140×12 CRW1 V**
	140	12	CRW1 R	**110×140×12 CRW1 R**
	145	12	CRW1 R	**110×145×12 CRW1 R**
	160	12	CRWH1 R	**110×160×12 CRWH1 R**

Radial shaft seals – CRW1, CRWA1, CRWH1 and CRWHA1 – metric dimensions
d_1 **115 – 280** mm

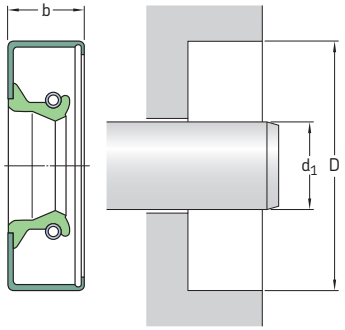

Please see **pages 74** to **76** for housing bore requirements.

Dimensions Shaft d_1	Bore D	Nominal seal width b	**Design and lip material**	**Designation**
mm			–	–
115	135	12	CRW1 R	**115×135×12 CRW1 R**
	140	12	CRW1 R	**115×140×12 CRW1 R**
	140	12	CRW1 V	**115×140×12 CRW1 V**
	145	12	CRW1 R	**115×145×12 CRW1 R**
	150	12	CRW1 R	**115×150×12 CRW1 R**
	160	12	CRW1 R	**115×160×12 CRW1 R**
120	140	12	CRWA1 R	**120×140×12 CRWA1 R**
	145	12	CRW1 R	**120×145×12 CRW1 R**
	150	12	CRW1 R	**120×150×12 CRW1 R**
	160	12	CRWH1 R	**120×160×12 CRWH1 R**
125	150	12	CRW1 R	**125×150×12 CRW1 R**
	150	12	CRW1 V	**125×150×12 CRW1 V**
	160	12	CRW1 R	**125×160×12 CRW1 R**
130	160	12	CRW1 R	**130×160×12 CRW1 R**
	160	12	CRW1 V	**130×160×12 CRW1 V**
	170	12	CRW1 R	**130×170×12 CRW1 R**
140	160	12	CRW1 R	**140×160×12 CRW1 R**
	170	12	CRW1 R	**140×170×12 CRW1 R**
	170	12	CRW1 V	**140×170×12 CRW1 V**[1)]
143	181	12,70	CRWHA1 R	**143×181×13 CRWHA1 R**
160	190	15	CRW1 V	**160×190×15 CRW1 V**
162	200	14,30	CRWHA1 R	**162×200×14 CRWHA1 R**
	200	15,88	CRWH1 R	**162×200×16 CRWH1 R**
188	215	16	CRWH1 R	**188×215×16 CRWH1 R**
203	254	15,88	CRWHA1 R	**203×254×16 CRWHA1 R**[1)]
216	254	15,88	CRWH1 R	**216×254×16 CRWH1 R**

[1)] Without SKF Bore Tite Coating

Dimensions			Design and lip material	Designation
Shaft	Bore	Nominal seal width		
d_1	D	b		
mm			–	–
220	250	16	CRWH1 R	**220×250×16 CRWH1 R**
280	320	20	CRWA1 R	**280×320×20 CRWA1 R**
	320	20	CRWA1 V	**280×320×20 CRWA1 V**

Radial shaft seals – CRW1, CRWA1, CRWH1 and CRWHA1 – inch dimensions
d_1 **0.250 – 0.669** in.

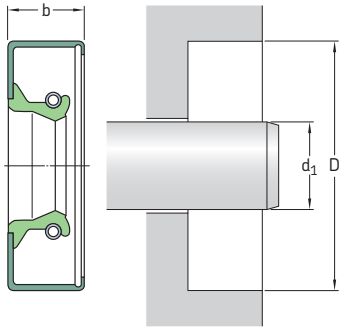

Please see **pages 74** to **76** for housing bore requirements.

Dimensions Shaft d_1	Bore D	Nominal seal width b	**Design and lip material**	**Designation**
in.			–	–
0.250	0.749	0.250	CRW1 V	**2513**[1]
	0.749	0.250	CRW1 R	**2514**
0.375	0.749	0.250	CRW1 R	**3687**[1]
	0.749	0.250	CRW1 V	**3688**
	0.750	0.250	CRWA1 R	**3680**
	0.836	0.188	CRW1 P	**3719**
	0.875	0.250	CRW1 R	**3725**
	0.999	0.250	CRW1 R	**3751**[1]
	0.999	0.250	CRW1 V	**3752**
	1.124	0.250	CRW1 R	**3806**[1]
0.438	0.875	0.250	CRW1 P	**4249**
	0.875	0.250	CRW1 R	**4251**[1]
	0.875	0.375	CRWA1 R	**4261**[1]
	0.875	0.375	CRWA1 V	**4262**
	0.999	0.250	CRW1 V	**4356**
	0.999	0.375	CRW1 P	**4353**
	0.999	0.375	CRW1 R	**4355**
	1.124	0.250	CRW1 R	**4390**
0.500	0.875	0.250	CRW1 R	**4931**
	0.875	0.250	CRW1 V	**4932**
	0.875	0.250	CRWA1 V	**4933**
	0.875	0.250	CRWA1 V	**4935**
	0.875	0.250	CRW1 D	**4936**
	0.875	0.313	CRWA1 R	**4939**
	0.987	0.250	CRW1 R	**4943**
	0.999	0.250	CRW1 V	**4980**
	0.999	0.250	CRW1 R	**4984**
	0.999	0.250	CRWA1 R	**4985**
	1.124	0.250	CRW1 P	**5045**
	1.124	0.250	CRWA1 R	**5062**
	1.124	0.250	CRW1 V	**5066**

[1] Without SKF Bore Tite Coating

Dimensions Shaft d_1	Bore D	Nominal seal width b	Design and lip material	Designation
in.			–	–
0.500	1.124	0.250	CRWA1 V	**5067**
cont.	1.124	0.250	CRW1 R	**5068**
	1.124	0.313	CRW1 P	**5046**
	1.250	0.250	CRW1 R	**5133**
	1.375	0.250	CRW1 R	**5150**
	1.375	0.250	CRW1 V	**5151**
0.531	0.999	0.250	CRWA1 S	**5321**
0.546	0.875	0.250	CRW1 P	**5385**[1]
0.554	0.999	0.250	CRW1 R	**5605**
0.563	0.875	0.188	CRW1 D	**5523**
	0.999	0.250	CRW1 R	**5541**
	0.999	0.250	CRW1 V	**5542**
	0.999	0.250	CRW1 R	**5543**
	0.999	0.250	CRWA1 R	**5606**
	1.124	0.250	CRW1 V	**5650**
	1.124	0.250	CRW1 R	**5652**
	1.124	0.250	CRWA1 R	**5662**
	1.250	0.250	CRW1 R	**5707**
	1.375	0.250	CRW1 R	**5756**
0.594	1.124	0.313	CRW1 R	**5926**
	1.124	0.313	CRW1 V	**5927**
0.625	0.987	0.250	CRW1 R	**6134**
	0.999	0.250	CRWA1 V	**6139**
	0.999	0.250	CRWA1 R	**6141**
	0.999	0.250	CRW1 R	**6143**
	1.063	0.250	CRW1 R	**6157**
	1.124	0.250	CRW1 R	**6903**
	1.124	0.250	CRWA1 R	**6904**
	1.124	0.250	CRW1 V	**6823**
	1.124	0.250	CRWA1 V	**6825**
	1.181	0.250	CRWA1 R	**6247**
	1.181	0.256	CRWA1 V	**6248**
	1.250	0.250	CRW1 V	**6909**
	1.250	0.250	CRW1 R	**6925**
	1.250	0.250	CRWA1 R	**6916**
	1.375	0.250	CRW1 R	**6372**
	1.375	0.250	CRWA1 R	**6373**
	1.375	0.250	CRW1 V	**6979**
	1.375	0.250	CRWA1 V	**6383**
	1.377	0.250	CRWHA1 R	**6391**
	1.499	0.250	CRW1 R	**6422**
0.656	1.124	0.313	CRW1 R	**6523**
	1.250	0.250	CRW1 R	**6541**
	1.375	0.313	CRW1 R	**6556**
	1.575	0.250	CRW1 R	**6582**
0.669	0.999	0.188	CRW1 R	**6595**
	1.064	0.250	CRW1 R	**6728**
	1.064	0.250	CRW1 R	**6729**
	1.573	0.281	CRW1 V	**6597**[1]

[1] Without SKF Bore Tite Coating

Radial shaft seals – CRW1, CRWA1, CRWH1 and CRWHA1 – inch dimensions
d_1 **0.688 – 0.875** in.

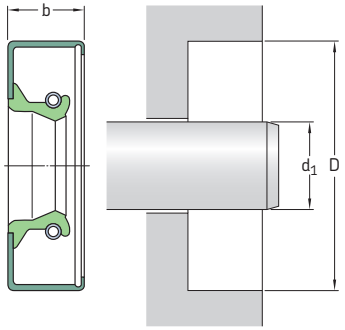

Please see **pages 74** to **76** for housing bore requirements.

Dimensions Shaft d_1	Bore D	Nominal seal width b	**Design and lip material**	**Designation**
in.			–	–
0.688	1.124	0.190	CRW1 R	**6738**
	1.124	0.250	CRW1 R	**6741**
	1.124	0.250	CRW1 R	**6743**
	1.124	0.250	CRW1 V	**6745**
	1.187	0.188	CRW1 V	**6770**
	1.188	0.188	CRW1 R	**6763**
	1.250	0.256	CRWA1 R	**6765**
	1.250	0.256	CRWHA1 V	**6751**
	1.250	0.313	CRW1 R	**6767**
	1.250	0.313	CRW1 V	**6768**
	1.252	0.220	CRWH1 V	**6769**
	1.375	0.250	CRWA1 R	**6814**
	1.375	0.313	CRW1 R	**6816**
	1.375	0.313	CRW1 V	**6817**
	1.499	0.250	CRW1 R	**6935**
	1.624	0.250	CRWA1 R	**6990**
0.750	1.124	0.188	CRW1 R	**7414**
	1.124	0.188	CRW1 V	**7417**
	1.249	0.188	CRW1 V	**7467**[1)]
	1.250	0.188	CRW1 R	**7439**
	1.250	0.188	CRW1 R	**7478**[1)]
	1.250	0.250	CRW1 R	**7438**
	1.250	0.250	CRW1 R	**7440**
	1.250	0.250	CRWA1 R	**7443**
	1.250	0.250	CRW1 V	**7450**
	1.250	0.250	CRWA1 V	**7453**
	1.250	0.250	CRWA1 V	**7455**
	1.252	0.188	CRW1 R	**7469**
	1.260	0.250	CRW1 R	**7473**
	1.312	0.250	CRW1 R	**7474**
	1.312	0.250	CRWA1 R	**7475**
	1.375	0.250	CRW1 R	**7512**

[1)] Without SKF Bore Tite Coating

Dimensions Shaft d_1	Bore D	Nominal seal width b	Design and lip material	Designation
in.			–	–
0.750 cont.	1.375	0.250	CRWA1 R	**7513**
	1.375	0.250	CRW1 V	**7515**
	1.375	0.250	CRWA1 V	**7517**
	1.375	0.250	CRWA1 P	**7533**
	1.499	0.250	CRW1 V	**7567**
	1.499	0.250	CRW1 R	**7572**[1)]
	1.499	0.250	CRWA1 R	**7573**
	1.575	0.250	CRW1 R	**7591**
	1.624	0.250	CRW1 V	**7623**
	1.624	0.250	CRWA1 V	**7624**
	1.624	0.250	CRW1 R	**7627**
	1.624	0.250	CRWA1 R	**7628**
	1.752	0.250	CRW1 R	**7636**
	1.752	0.250	CRWA1 V	**7638**
	1.828	0.250	CRW1 R	**7661**
	1.874	0.250	CRW1 R	**7690**
	2.047	0.313	CRW1 R	**7693**
0.781	1.375	0.313	CRW1 V	**7824**
	1.375	0.313	CRW1 R	**7829**[1)]
	1.499	0.313	CRW1 R	**7849**
	1.624	0.313	CRW1 R	**7872**
	1.828	0.250	CRW1 P	**7889**
0.787	1.124	0.188	CRW1 R	**7740**
0.813	1.187	0.313	CRWA1 V	**8013**
	1.250	0.188	CRW1 R	**8017**[1)]
	1.250	0.188	CRW1 P	**8018**
	1.375	0.375	CRW1 V	**8053**
	1.375	0.375	CRW1 R	**8060**
	1.499	0.250	CRW1 R	**8088**[1)]
	1.624	0.250	CRW1 V	**8178**
	1.752	0.375	CRW1 R	**8215**
0.875	1.250	0.188	CRW1 R	**8624**
	1.250	0.250	CRW1 V	**8621**
	1.308	0.250	CRW1 V	**8649**
	1.375	0.250	CRW1 V	**8646**
	1.375	0.250	CRW1 R	**8648**
	1.437	0.250	CRW1 R	**8691**
	1.499	0.250	CRW1 R	**8700**
	1.499	0.250	CRWA1 R	**8702**
	1.499	0.250	CRW1 V	**8704**
	1.499	0.250	CRWA1 V	**8707**
	1.499	0.313	CRW1 R	**8703**[1)]
	1.502	0.313	CRWA1 R	**8748**
	1.575	0.250	CRW1 R	**8763**
	1.624	0.250	CRWA1 R	**8782**
	1.624	0.250	CRW1 V	**8795**
	1.624	0.250	CRW1 R	**8796**
	1.752	0.250	CRW1 R	**8821**
	1.828	0.250	CRW1 R	**8842**
	1.874	0.250	CRW1 R	**8860**

[1)] Without SKF Bore Tite Coating

Radial shaft seals – CRW1, CRWA1, CRWH1 and CRWHA1 – inch dimensions
d_1 **0.875 – 1.063** in.

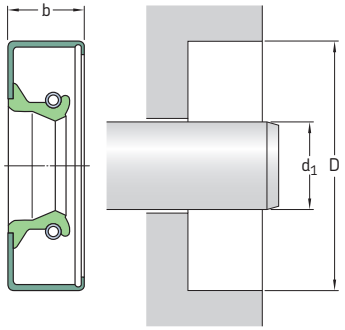

Please see **pages 74** to **76** for housing bore requirements.

Dimensions Shaft d_1	Bore D	Nominal seal width b	**Design and lip material**	**Designation**
in.			–	–
0.875	2.000	0.250	CRW1 R	**8870**
cont.	2.050	0.375	CRWH1 V	**8871**
0.882	2.088	0.313	CRWHA1 R	**9000**
0.938	1.375	0.250	CRWA1 R	**9244**
	1.500	0.250	CRW1 R	**9303**
	1.500	0.250	CRW1 V	**9304**
	1.624	0.250	CRW1 R	**9307**
	1.624	0.250	CRW1 V	**9308**
	1.752	0.250	CRW1 R	**9347**
	1.828	0.250	CRW1 R	**9409**
0.950	1.358	0.275	CRW1 P	**9520**
0.969	1.406	0.250	CRWA1 P	**9604**
	1.499	0.313	CRW1 V	**9611**
	1.499	0.313	CRW1 R	**9613**[1)]
	1.624	0.250	CRW1 R	**9646**
	1.624	0.250	CRW1 V	**9647**
	1.686	0.313	CRWA1 R	**9663**
	1.686	0.313	CRW1 R	**9664**
	1.752	0.250	CRW1 R	**9667**
	1.828	0.313	CRW1 R	**9681**
0.981	1.376	0.313	CRW1 V	**9888**[1)]
0.984	1.499	0.250	CRW1 V	**9686**
	1.749	0.375	CRWA1 V	**9803**[1)]
1.000	1.367	0.313	CRW1 R	**9822**
	1.375	0.250	CRW1 P	**9826**[1)]
	1.375	0.250	CRW1 V	**9831**

[1)] Without SKF Bore Tite Coating

Dimensions			Design and lip material	Designation
Shaft	Bore	Nominal seal width		
d_1	D	b		
in.			–	–
1.000	1.437	0.250	CRW1 V	**9833**
cont.	1.437	0.250	CRW1 R	**9837**
	1.437	0.250	CRWA1 R	**9838**
	1.437	0.250	CRWA1 V	**9847**
	1.496	0.390	CRW1 R	**9850**
	1.499	0.250	CRW1 R	**9852**
	1.499	0.250	CRW1 V	**9854**
	1.499	0.250	CRW1 R	**9876**
	1.499	0.250	CRWA1 R	**9878**
	1.499	0.250	CRWA1 V	**9879**
	1.499	0.315	CRWA1 V	**9862**
	1.499	0.315	CRW1 V	**9892**
	1.561	0.250	CRW1 R	**9894**
	1.575	0.313	CRWA1 R	**9907**
	1.624	0.250	CRW1 R	**9934**
	1.624	0.250	CRWA1 R	**9935**
	1.624	0.250	CRW1 V	**9937**
	1.624	0.250	CRWA1 V	**9939**
	1.686	0.250	CRW1 R	**9960**
	1.752	0.250	CRW1 V	**9982**
	1.752	0.250	CRWA1 V	**9983**
	1.752	0.250	CRW1 R	**9997**
	1.752	0.250	CRWA1 R	**9998**
	1.828	0.250	CRW1 V	**10058**
	1.828	0.250	CRW1 P	**10047**
	1.828	0.250	CRW1 R	**10049**
	1.828	0.250	CRWA1 R	**10050**
	1.851	0.250	CRW1 R	**10071**
	1.874	0.250	CRW1 R	**10075**
	1.938	0.250	CRW1 R	**10104**
	1.983	0.250	CRWA1 V	**10111**
	1.983	0.313	CRWA1 R	**10114**
	2.000	0.250	CRW1 R	**10123**
	2.000	0.250	CRWA1 R	**10124**
	2.000	0.250	CRWA1 R	**10127**
	2.000	0.250	CRW1 V	**10128**
	2.000	0.250	CRWA1 V	**10129**
	2.047	0.250	CRWA1 R	**10157**
	2.062	0.250	CRW1 R	**10158**
	2.250	0.250	CRW1 R	**10169**
1.063	1.499	0.250	CRW1 R	**10515**
	1.499	0.250	CRW1 V	**10518**
	1.512	0.256	CRW1 P	**532866**
	1.561	0.250	CRW1 R	**10581**
	1.577	0.250	CRW1 R	**10583**
	1.624	0.250	CRW1 R	**10598**
	1.686	0.250	CRW1 R	**10632**
	1.752	0.250	CRW1 R	**10653**
	1.828	0.250	CRW1 R	**10681**
	1.828	0.250	CRW1 V	**10682**
	1.874	0.250	CRW1 R	**10700**
	1.979	0.250	CRW1 R	**10728**
	1.983	0.250	CRW1 R	**10733**

Radial shaft seals – CRW1, CRWA1, CRWH1 and CRWHA1 – inch dimensions
d_1 **1.063 – 1.250** in.

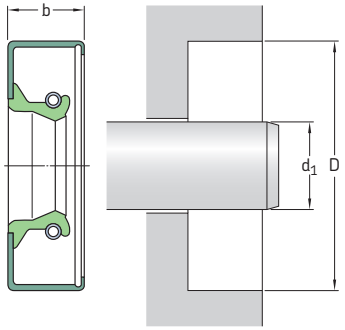

Please see **pages 74** to **76** for housing bore requirements.

Dimensions			Design and lip material	Designation
Shaft	Bore	Nominal seal width		
d_1	D	b		
in.			–	–
1.063	2.000	0.250	CRW1 R	**10740**
cont.	2.062	0.250	CRW1 R	**10766**
1.125	1.499	0.188	CRW1 V	**11059**[1]
	1.499	0.188	CRW1 R	**11061**[1]
	1.561	0.250	CRW1 P	**11066**
	1.561	0.250	CRW1 R	**11067**
	1.561	0.250	CRW1 V	**11071**
	1.565	0.250	CRW1 R	**11082**
	1.624	0.250	CRW1 P	**11111**
	1.624	0.250	CRW1 R	**11123**
	1.624	0.250	CRWA1 R	**11124**
	1.624	0.250	CRW1 V	**11133**
	1.624	0.250	CRWA1 V	**11134**
	1.733	0.375	CRW1 R	**11137**
	1.752	0.250	CRW1 R	**11138**
	1.752	0.250	CRW1 V	**11144**
	1.828	0.250	CRW1 R	**11170**
	1.828	0.250	CRWA1 R	**11171**
	1.828	0.250	CRW1 V	**11172**
	1.828	0.250	CRWA1 V	**11175**
	1.852	0.313	CRWH1 R	**11197**
	1.852	0.313	CRWHA1 R	**11200**
	1.874	0.250	CRW1 V	**11225**
	1.874	0.250	CRWA1 V	**11218**
	1.874	0.250	CRW1 R	**11224**
	1.874	0.250	CRWA1 R	**11223**
	1.983	0.250	CRW1 R	**11299**
	2.000	0.250	CRW1 R	**11340**
	2.000	0.250	CRW1 V	**11344**
	2.000	0.374	CRWA1 V	**12138**
	2.000	0.375	CRWA1 R	**11343**

[1] Without SKF Bore Tite Coating

Dimensions			Design and	Designation
Shaft	Bore	Nominal seal width	lip material	
d_1	D	b		
in.			–	–
1.125	2.047	0.313	CRWA1 R	**11353**
cont.	2.062	0.250	CRWA1 V	**11368**
	2.062	0.313	CRW1 R	**11366**
	2.125	0.313	CRW1 R	**11372**
	2.125	0.313	CRW1 V	**11373**
	2.250	0.250	CRW1 R	**11378**
	2.441	0.250	CRW1 R	**11392**
1.126	1.575	0.236	CRWA1 R	**11086**
1.156	1.686	0.250	CRWA1 R	**11518**
	1.752	0.250	CRWA1 R	**11514**
	1.874	0.250	CRW1 R	**11524**
	1.875	0.375	CRWA1 R	**11536**[1]
	2.000	0.250	CRW1 R	**11544**
	2.000	0.250	CRWA1 R	**11545**
	2.000	0.250	CRW1 V	**11550**
	2.062	0.313	CRW1 R	**11558**
1.175	2.031	0.500	CRW1 R	**11553**
1.178	2.073	0.335	CRW1 S	**11650**
1.188	1.561	0.313	CRW1 V	**11710**[1]
	1.686	0.250	CRW1 P	**11728**
	1.687	0.250	CRW1 R	**11730**
	1.752	0.250	CRW1 R	**11734**
	1.752	0.250	CRW1 V	**11736**
	1.828	0.375	CRW1 R	**11740**
	1.875	0.250	CRW1 P	**11763**
	1.875	0.375	CRW1 R	**11585**
	1.983	0.250	CRW1 R	**11776**
	1.983	0.250	CRWA1 R	**11777**
	2.000	0.250	CRW1 R	**11800**
	2.000	0.250	CRWA1 R	**11801**
	2.000	0.250	CRW1 V	**11806**
	2.062	0.250	CRW1 R	**11878**
	2.062	0.250	CRW1 P	**11879**
	2.125	0.313	CRW1 R	**11907**
	2.165	0.250	CRW1 R	**11911**
	2.250	0.250	CRW1 R	**11914**
	2.437	0.250	CRW1 R	**11923**
	2.441	0.250	CRW1 R	**11930**
1.190	2.125	0.313	CRWHA1 R	**11908**
1.234	2.250	0.250	CRW1 R	**12590**
1.250	1.625	0.188	CRW1 R	**12329**
	1.687	0.250	CRW1 V	**12335**
	1.687	0.250	CRW1 R	**12336**
	1.687	0.250	CRWA1 V	**12337**
	1.687	0.313	CRWA1 R	**12350**

[1] Without SKF Bore Tite Coating

Radial shaft seals – CRW1, CRWA1, CRWH1 and CRWHA1 – inch dimensions
d_1 **1.250 – 1.375** in.

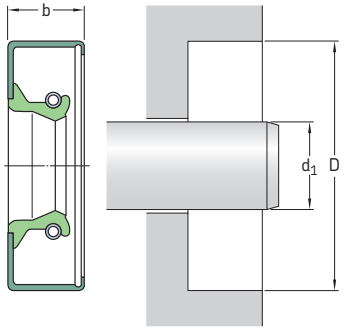

Please see **pages 74** to **76** for housing bore requirements.

Dimensions Shaft d_1	Bore D	Nominal seal width b	**Design and lip material**	**Designation**
in.			–	–
1.250 cont.	1.752	0.250	CRW1 V	**12340**
	1.752	0.250	CRWA1 V	**12343**
	1.752	0.250	CRW1 R	**12363**
	1.752	0.250	CRWA1 R	**12364**
	1.874	0.250	CRW1 P	**12382**
	1.874	0.250	CRWA1 V	**12383**
	1.874	0.250	CRW1 R	**12384**
	1.874	0.250	CRWA1 R	**12386**
	1.938	0.250	CRW1 R	**12391**
	1.955	0.250	CRWA1 R	**12396**
	1.983	0.250	CRW1 R	**12427**
	1.983	0.250	CRWA1 R	**12428**
	1.983	0.250	CRW1 V	**12432**
	2.000	0.250	CRW1 V	**12445**
	2.000	0.250	CRWA1 V	**12446**
	2.000	0.250	CRW1 R	**12456**
	2.000	0.250	CRWA1 R	**12458**
	2.000	0.438	CRW1 P	**12483**
	2.062	0.250	CRWA1 V	**12531**
	2.062	0.433	CRWHA1 V	**12533**
	2.062	0.438	CRWH1 R	**12530**
	2.125	0.250	CRW1 V	**12544**
	2.125	0.250	CRW1 R	**12545**
	2.125	0.250	CRWA1 R	**12551**
	2.250	0.250	CRW1 R	**12577**
	2.327	0.500	CRW1 R	**12610**
	2.374	0.313	CRW1 R	**12613**
	2.374	0.313	CRWA1 R	**12614**
	2.374	0.315	CRW1 V	**12612**
	2.437	0.250	CRW1 R	**12621**
	2.441	0.250	CRW1 R	**12631**
	2.500	0.310	CRW1 V	**12638**
	2.502	0.313	CRW1 R	**12637**

Dimensions			Design and lip material	Designation
Shaft	Bore	Nominal seal width		
d_1	D	b		
in.			–	–
1.301	2.046	0.492	CRWA1 R	**12907**
1.313	1.828	0.375	CRW1 P	**13021**
	2.062	0.313	CRW1 R	**13050**
	2.062	0.313	CRWA1 R	**13052**
	2.062	0.313	CRW1 V	**13054**
	2.125	0.313	CRW1 R	**13092**
	2.250	0.313	CRW1 R	**13112**
	2.282	0.250	CRWA1 R	**13157**
1.328	2.031	0.313	CRW1 R	**13415**[1)]
	2.061	0.313	CRW1 R	**13350**
	2.227	0.313	CRW1 R	**13418**
1.344	2.106	0.313	CRW1 R	**13421**
	2.125	0.313	CRW1 R	**13437**
1.365	1.956	0.438	CRW1 R	**13985**
	2.081	0.313	CRW1 R	**13598**
	2.261	0.313	CRW1 R	**13700**
1.375	1.750	0.250	CRW1 R	**13514**
	1.828	0.250	CRWA1 V	**13510**
	1.828	0.313	CRW1 R	**13537**
	1.835	0.250	CRW1 R	**13536**
	1.873	0.313	CRW1 V	**13511**
	1.874	0.250	CRW1 P	**13512**
	1.874	0.250	CRW1 R	**13534**
	1.874	0.250	CRW1 V	**13538**
	1.874	0.313	CRWA1 R	**13535**
	1.938	0.250	CRWA1 R	**13552**
	1.955	0.433	CRWA1 P	**13527**
	1.983	0.313	CRW1 P	**13557**
	2.000	0.313	CRWA1 P	**13562**
	2.000	0.313	CRW1 R	**13568**
	2.000	0.313	CRWA1 R	**13569**
	2.000	0.313	CRWH1 R	**13571**
	2.000	0.313	CRW1 V	**13579**
	2.000	0.313	CRWA1 V	**13581**
	2.062	0.313	CRW1 V	**13582**
	2.062	0.313	CRW1 R	**13585**[1)]
	2.062	0.313	CRWA1 P	**13588**
	2.062	0.315	CRWA1 V	**13607**
	2.106	0.313	CRWA1 R	**13602**[1)]
	2.106	0.313	CRW1 P	**13614**
	2.125	0.313	CRW1 R	**13649**
	2.125	0.313	CRWA1 R	**13651**
	2.125	0.313	CRWA1 V	**13661**
	2.125	0.313	CRW1 V	**13663**
	2.250	0.250	CRWA1 R	**13698**
	2.250	0.313	CRW1 R	**13671**
	2.250	0.313	CRWA1 R	**13676**
	2.250	0.313	CRW1 V	**13688**
	2.250	0.313	CRWA1 V	**13691**
	2.250	0.313	CRW1 P	**13869**

[1)] Without SKF Bore Tite Coating

Radial shaft seals – CRW1, CRWA1, CRWH1 and CRWHA1 – inch dimensions
d_1 **1.375 – 1.500** in.

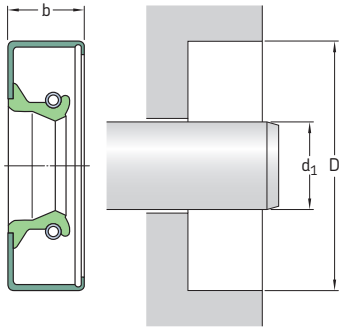

Please see **pages 74** to **76** for housing bore requirements.

Dimensions Shaft d_1	Bore D	Nominal seal width b	**Design and lip material**	**Designation**
in.			–	–
1.375	2.374	0.313	CRW1 V	**13734**
cont.	2.374	0.313	CRW1 R	**13738**
	2.374	0.313	CRWA1 R	**13739**
	2.437	0.250	CRW1 R	**13797**
	2.441	0.313	CRW1 R	**13810**
	2.441	0.313	CRWA1 R	**13812**
	2.502	0.313	CRW1 R	**13865**
	2.502	0.313	CRW1 V	**13867**
	2.502	0.374	CRWA1 V	**13856**
	2.562	0.375	CRW1 R	**13875**
	2.562	0.375	CRWA1 R	**13876**
	2.562	0.375	CRWA1 V	**13878**
	2.623	0.313	CRWA1 V	**13882**
	2.686	0.500	CRW1 R	**13892**
	2.716	0.313	CRW1 R	**13900**
	2.812	0.375	CRWHA1 R	**13912**
	2.835	0.313	CRWA1 R	**13918**
	2.835	0.313	CRW1 R	**13920**
	2.835	0.313	CRWA1 P	**13925**
	2.875	0.313	CRWA1 P	**13929**
1.378	2.835	0.313	CRWA1 V	**13926**
1.417	2.616	0.313	CRW1 R	**14092**
1.438	2.062	0.313	CRW1 V	**14212**[1)]
	2.062	0.313	CRWA1 R	**14214**
	2.125	0.313	CRW1 R	**14223**
	2.125	0.313	CRWA1 V	**14225**
	2.250	0.313	CRWA1 R	**14247**
	2.250	0.313	CRWA1 V	**14259**
	2.250	0.313	CRW1 V	**14260**
	2.250	0.313	CRW1 R	**14262**

[1)] Without SKF Bore Tite Coating

Dimensions Shaft d_1	Bore D	Nominal seal width b	Design and lip material	Designation
in.			–	–
1.438	2.374	0.313	CRW1 R	**14282**
cont.	2.374	0.313	CRWA1 R	**14285**
	2.437	0.313	CRW1 R	**14363**
	2.502	0.313	CRW1 R	**14383**
	2.623	0.313	CRW1 R	**14404**
	2.686	0.313	CRW1 R	**14423**
	2.750	0.313	CRW1 R	**14458**
1.484	2.254	0.313	CRW1 R	**14907**
1.494	2.060	0.270	CRW1 R	**14789**
1.496	2.165	0.315	CRWA1 R	**550250**
1.500	1.874	0.250	CRW1 R	**14807**[1]
	1.918	0.250	CRW1 V	**14809**[1]
	1.983	0.250	CRW1 V	**14821**
	1.983	0.250	CRWA1 R	**14824**
	1.983	0.313	CRW1 R	**14832**
	2.000	0.313	CRWA1 R	**14846**
	2.000	0.313	CRW1 R	**14855**
	2.000	0.313	CRW1 V	**14861**
	2.048	0.313	CRWA1 R	**14858**
	2.062	0.313	CRW1 R	**14864**
	2.062	0.313	CRW1 V	**14867**
	2.125	0.313	CRW1 R	**14875**
	2.125	0.313	CRWA1 R	**14876**
	2.125	0.313	CRW1 V	**14886**
	2.125	0.313	CRWA1 V	**14887**
	2.222	0.313	CRW1 R	**14903**
	2.250	0.313	CRW1 S	**14935**
	2.250	0.313	CRW1 R	**14938**
	2.250	0.313	CRWA1 R	**14939**
	2.250	0.313	CRW1 V	**14940**
	2.250	0.313	CRWA1 V	**14942**
	2.260	0.406	CRW1 R	**14968**
	2.374	0.313	CRW1 V	**14992**
	2.374	0.313	CRWA1 V	**14994**
	2.374	0.313	CRW1 R	**15004**
	2.374	0.313	CRWA1 R	**15005**
	2.374	0.500	CRWH1 R	**15039**
	2.377	0.453	CRWA1 R	**15041**
	2.437	0.313	CRW1 R	**15076**
	2.441	0.313	CRW1 R	**15092**[1]
	2.441	0.313	CRWA1 R	**15093**
	2.441	0.313	CRW1 V	**15097**
	2.502	0.313	CRW1 V	**15138**
	2.502	0.313	CRW1 R	**15141**
	2.502	0.313	CRWA1 R	**15142**
	2.561	0.313	CRW1 R	**15176**
	2.623	0.313	CRW1 R	**15194**
	2.686	0.500	CRW1 R	**15207**

[1] Without SKF Bore Tite Coating

Radial shaft seals – CRW1, CRWA1, CRWH1 and CRWHA1 – inch dimensions
d_1 **1.500 – 1.645** in.

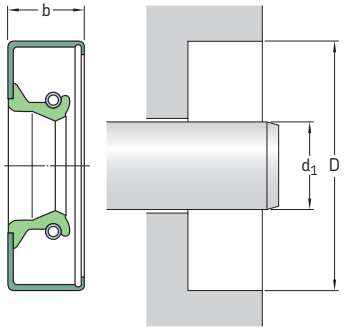

Please see **pages 74** to **76** for housing bore requirements.

Dimensions Shaft d_1	Bore D	Nominal seal width b	**Design and lip material**	**Designation**
in.			–	–
1.500	2.716	0.438	CRW1 R	**15204**
cont.	2.750	0.313	CRW1 R	**15214**
	2.758	0.313	CRW1 R	**15230**
	2.835	0.313	CRW1 R	**15234**
	2.875	0.313	CRW1 R	**15235**
1.552	2.502	0.500	CRWA1 R	**15450**
	2.686	0.500	CRW1 R	**15460**
	2.750	0.500	CRWHA1 P	**15462**
1.563	2.062	0.250	CRW1 V	**15506**
	2.062	0.250	CRW1 R	**15508**
	2.125	0.313	CRW1 R	**15517**[1)]
	2.125	0.313	CRWA1 P	**15518**
	2.250	0.313	CRW1 R	**15522**
	2.374	0.313	CRW1 P	**15540**[1)]
	2.374	0.313	CRW1 R	**15542**
	2.374	0.313	CRWA1 R	**15543**
	2.374	0.313	CRWA1 V	**15549**
	2.437	0.313	CRW1 R	**15592**[1)]
	2.441	0.500	CRWA1 R	**15620**
	2.465	0.374	CRWA1 P	**15624**
	2.502	0.313	CRWA1 R	**15635**
	2.502	0.313	CRW1 R	**15655**
	2.502	0.313	CRW1 V	**15656**
	2.561	0.313	CRW1 R	**15677**
	2.623	0.313	CRW1 R	**15699**
	2.686	0.313	CRW1 R	**15707**
	2.750	0.500	CRWH1 R	**15761**
	2.875	0.313	CRW1 R	**15773**
	2.875	0.313	CRWA1 P	**15779**

[1)] Without SKF Bore Tite Coating

Dimensions Shaft d_1	Bore D	Nominal seal width b	Design and lip material	Designation
in.			–	–
1.578	2.082	0.250	CRW1 R	**15510**
	2.408	0.313	CRWHA1 R	**15557**
1.594	2.125	0.313	CRW1 P	**15915**
	2.437	0.313	CRW1 P	**15940**
	2.437	0.313	CRW1 R	**15955**
	2.502	0.313	CRW1 R	**15960**
	2.623	0.313	CRW1 R	**15968**
	2.758	0.313	CRW1 R	**15975**
1.618	2.531	0.438	CRWA1 R	**16449**
1.625	2.000	0.250	CRW1 V	**16039**
	2.000	0.250	CRW1 R	**16046**[1]
	2.116	0.313	CRWA1 R	**16047**
	2.125	0.250	CRW1 V	**16048**
	2.125	0.250	CRW1 R	**16054**
	2.248	0.313	CRWA1 R	**16062**
	2.250	0.313	CRW1 R	**16061**
	2.250	0.313	CRW1 V	**16078**[1]
	2.250	0.375	CRW1 P	**16049**
	2.282	0.313	CRW1 R	**16083**
	2.374	0.250	CRW1 R	**16094**[1]
	2.374	0.313	CRWH1 R	**16072**
	2.374	0.313	CRW1 V	**16077**
	2.374	0.313	CRW1 R	**16084**
	2.374	0.313	CRWA1 R	**16085**
	2.374	0.313	CRWA1 P	**16091**[1]
	2.374	0.500	CRWH1 R	**16079**
	2.437	0.313	CRW1 R	**16113**
	2.437	0.313	CRWA1 R	**16128**
	2.437	0.313	CRW1 V	**16119**
	2.437	0.313	CRWA1 V	**16120**
	2.441	0.313	CRW1 R	**16180**
	2.441	0.313	CRWA1 R	**16201**
	2.502	0.313	CRWA1 V	**16243**
	2.502	0.313	CRW1 R	**16245**
	2.502	0.313	CRWA1 R	**16246**
	2.502	0.313	CRWA1 P	**16247**[1]
	2.502	0.374	CRWHA1 V	**16257**
	2.502	0.375	CRWHA1 R	**16254**
	2.562	0.313	CRWA1 V	**16290**
	2.623	0.313	CRW1 R	**16314**
	2.623	0.313	CRWA1 R	**16315**
	2.623	0.313	CRW1 V	**16316**
	2.686	0.313	CRW1 R	**16337**
	2.686	0.313	CRW1 V	**16338**
	2.750	0.250	CRW1 R	**16364**
	2.750	0.313	CRWH1 R	**16368**
	2.758	0.313	CRW1 R	**16374**
	2.875	0.313	CRW1 R	**16406**
	3.000	0.313	CRWH1 R	**16422**
1.645	2.656	0.313	CRWA1 P	**16500**

[1] Without SKF Bore Tite Coating

Radial shaft seals – CRW1, CRWA1, CRWH1 and CRWHA1 – inch dimensions
d_1 **1.656 – 1.813** in.

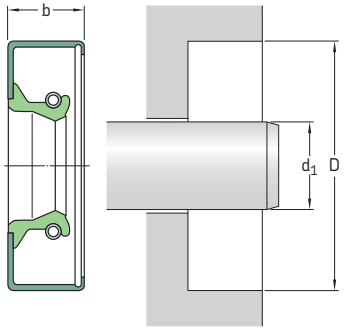

Please see **pages 74** to **76** for housing bore requirements.

Dimensions Shaft d_1	Bore D	Nominal seal width b	**Design and lip material**	**Designation**
in.			–	–
1.656	2.623	0.375	CRWA1 P	**16545**
	2.686	0.313	CRW1 R	**16556**
1.688	2.279	0.500	CRWH1 R	**16650**
	2.328	0.313	CRWA1 R	**16657**
	2.437	0.250	CRW1 S	**16692**
	2.437	0.313	CRW1 R	**16679**
	2.437	0.313	CRWA1 R	**16680**
	2.437	0.469	CRW1 S	**16696**
	2.502	0.313	CRW1 R	**16719**
	2.623	0.313	CRWA1 R	**16814**
	2.623	0.500	CRW1 R	**16816**
	2.623	0.500	CRWA1 V	**16817**
	2.686	0.313	CRW1 R	**16842**
	2.716	0.313	CRW1 R	**16854**
	2.750	0.313	CRW1 R	**16900**[1)]
	2.750	0.375	CRWA1 R	**16903**
	2.875	0.313	CRW1 R	**16999**
	3.061	0.375	CRW1 R	**17035**
	3.125	0.375	CRWA1 R	**17038**
1.704	3.034	0.500	CRWA1 R	**17100**
1.719	2.561	0.315	CRWA1 R	**17144**
1.750	2.250	0.313	CRW1 R	**17231**
	2.250	0.313	CRW1 V	**17234**
	2.374	0.313	CRWA1 V	**17261**
	2.374	0.313	CRW1 R	**17270**
	2.374	0.313	CRWA1 R	**17271**
	2.411	0.375	CRW1 P	**17280**
	2.437	0.313	CRW1 R	**17283**
	2.437	0.313	CRW1 R	**17284**

[1)] Without SKF Bore Tite Coating

Dimensions Shaft d_1	Bore D	Nominal seal width b	Design and lip material	Designation
in.			–	–
1.750 cont.	2.437	0.313	CRWA1 R	**17285**
	2.437	0.313	CRW1 V	**17292**
	2.437	0.313	CRWA1 V	**17293**
	2.441	0.313	CRW1 R	**17315**
	2.441	0.313	CRWA1 R	**550154**
	2.441	0.375	CRWA1 V	**17320**
	2.502	0.313	CRW1 V	**17379**
	2.502	0.313	CRWA1 V	**17381**
	2.502	0.313	CRW1 R	**17386**
	2.502	0.313	CRWA1 R	**17387**
	2.502	0.375	CRWHA1 V	**17395**
	2.502	0.375	CRW1 S	**17399**
	2.561	0.313	CRW1 R	**17404**
	2.565	0.313	CRWA1 R	**17413**
	2.623	0.313	CRW1 R	**17442**
	2.623	0.313	CRWA1 R	**17443**
	2.623	0.313	CRW1 S	**17444**
	2.623	0.313	CRWA1 V	**17448**
	2.623	0.375	CRWH1 R	**17456**
	2.686	0.313	CRW1 R	**17484**[1]
	2.717	0.438	CRWA1 R	**17607**
	2.750	0.313	CRWA1 R	**17523**
	2.750	0.313	CRW1 R	**17557**
	2.750	0.313	CRW1 V	**17558**
	2.758	0.313	CRW1 R	**17605**
	2.810	0.313	CRWA1 R	**17624**[1]
	2.810	0.313	CRWA1 V	**17627**
	2.875	0.313	CRW1 R	**17653**
	2.875	0.313	CRW1 V	**17657**
	2.875	0.375	CRWHA1 R	**17645**
	2.981	0.438	CRWHA1 R	**17675**[1]
	2.997	0.313	CRWHA1 R	**17678**
	2.997	0.313	CRW1 R	**17695**
	3.000	0.313	CRWA1 R	**17699**
	3.000	0.313	CRW1 R	**17707**
	3.000	0.313	CRW1 V	**17709**
	3.061	0.313	CRW1 R	**17716**
	3.061	0.375	CRWA1 R	**17718**
	3.189	0.313	CRW1 R	**17746**
	3.543	0.438	CRW1 R	**17756**
	3.625	0.438	CRW1 R	**17761**
1.768	2.363	0.313	CRWHA1 V	**17780**
1.781	2.252	0.313	CRWA1 R	**17806**
	2.502	0.313	CRWH1 R	**17810**
	2.502	0.313	CRWH1 V	**17811**
	2.623	0.313	CRW1 R	**17821**
	2.686	0.313	CRW1 R	**17832**[1]
1.812	2.623	0.374	CRWA1 V	**17949**
1.813	2.279	0.313	CRW1 R	**18025**
	2.437	0.313	CRW1 R	**18039**
	2.562	0.313	CRWA1 V	**18049**

[1] Without SKF Bore Tite Coating

Radial shaft seals – CRW1, CRWA1, CRWH1 and CRWHA1 – inch dimensions
d_1 **1.813 – 1.938** in.

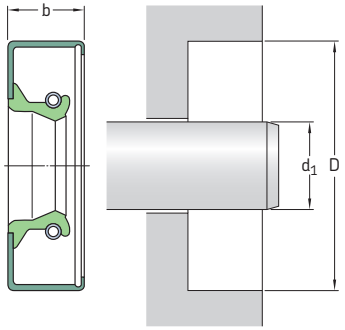

Please see **pages 74** to **76** for housing bore requirements.

Dimensions Shaft d_1	Bore D	Nominal seal width b	**Design and lip material**	**Designation**
in.			–	–
1.813	2.623	0.313	CRW1 R	**18104**
cont.	2.686	0.313	CRWA1 P	**18114**
	2.750	0.313	CRW1 R	**18159**
	2.875	0.313	CRW1 R	**18242**
	3.000	0.375	CRWA1 P	**18264**
1.844	2.623	0.313	CRW1 R	**18425**
	2.750	0.313	CRW1 P	**18444**
1.868	2.518	0.315	CRWA1 P	**18492**
1.875	2.398	0.250	CRW1 R	**18549**
	2.471	0.313	CRWA1 R	**18545**
	2.500	0.313	CRW1 P	**18555**
	2.502	0.313	CRW1 R	**18565**
	2.562	0.313	CRWA1 V	**18546**
	2.562	0.313	CRW1 P	**18562**
	2.623	0.313	CRW1 R	**18580**
	2.623	0.313	CRWA1 R	**18581**
	2.623	0.313	CRW1 V	**18582**
	2.623	0.313	CRWA1 V	**18584**
	2.623	0.374	CRW1 S	**18592**
	2.686	0.313	CRW1 R	**18626**
	2.750	0.313	CRW1 V	**18652**
	2.750	0.313	CRW1 R	**18657**
	2.750	0.313	CRWA1 R	**18658**
	2.750	0.313	CRW1 P	**18666**
	2.758	0.313	CRW1 P	**18671**
	2.758	0.313	CRW1 S	**18679**
	2.782	0.438	CRWH1 R	**18693**
	2.782	0.438	CRWHA1 R	**18695**
	2.875	0.313	CRW1 V	**18732**
	2.875	0.313	CRW1 R	**18733**
	2.875	0.313	CRWA1 R	**18734**

Dimensions Shaft d_1	Bore D	Nominal seal width b	Design and lip material	Designation
in.			–	–
1.875 cont.	2.875	0.313	CRWA1 V	**18737**
	2.997	0.313	CRW1 R	**18785**
	3.000	0.313	CRW1 R	**18817**
	3.000	0.313	CRW1 V	**18818**
	3.061	0.313	CRWA1 R	**18872**
	3.105	0.500	CRWA1 R	**18880**
	3.189	0.469	CRWH1 R	**18899**
	3.249	0.484	CRWA1 R	**18922**
	3.371	0.438	CRWH1 R	**18916**
	3.496	0.438	CRWA1 R	**18924**
	3.500	0.438	CRW1 R	**18926**
1.893	2.434	0.250	CRW1 R	**19000**[1]
1.906	2.752	0.375	CRWA1 P	**19017**
1.915	2.533	0.250	CRW1 R	**19010**
1.938	2.412	0.313	CRW1 R	**19215**
	2.437	0.250	CRW1 R	**19210**
	2.437	0.250	CRW1 R	**19212**
	2.502	0.375	CRWA1 R	**19220**
	2.563	0.313	CRW1 R	**19211**
	2.623	0.313	CRW1 R	**19226**
	2.623	0.313	CRWA1 V	**19227**
	2.623	0.313	CRWA1 R	**19229**
	2.686	0.300	CRW1 P	**19244**
	2.686	0.313	CRWA1 P	**19234**
	2.686	0.313	CRW1 R	**19236**
	2.686	0.313	CRWA1 R	**19237**
	2.686	0.313	CRWA1 V	**19243**
	2.686	0.375	CRW1 S	**19240**
	2.750	0.313	CRW1 R	**19264**
	2.750	0.313	CRW1 V	**19267**
	2.875	0.313	CRW1 R	**19300**
	2.875	0.313	CRWA1 R	**19301**
	2.875	0.313	CRWH1 V	**19304**
	2.884	0.313	CRWA1 P	**19310**
	2.997	0.313	CRW1 R	**19350**
	3.000	0.313	CRW1 R	**19359**
	3.000	0.313	CRWA1 R	**19360**[1]
	3.000	0.313	CRWA1 V	**19368**
	3.061	0.313	CRW1 R	**19380**
	3.062	0.500	CRW1 S	**19438**
	3.125	0.500	CRW1 R	**19400**
	3.189	0.313	CRW1 R	**19407**
	3.251	0.313	CRWA1 V	**19433**
	3.251	0.313	CRW1 R	**19434**
	3.350	0.469	CRWHA1 R	**19445**
	3.543	0.313	CRW1 R	**19449**

[1] Without SKF Bore Tite Coating

Radial shaft seals – CRW1, CRWA1, CRWH1 and CRWHA1 – inch dimensions
d_1 **1.969 – 2.125** in.

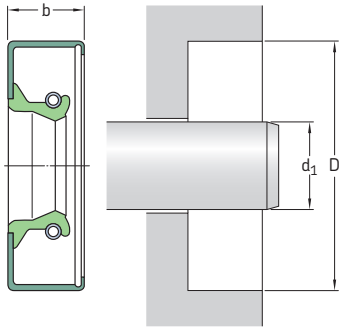

Please see **pages 74** to **76** for housing bore requirements.

Dimensions Shaft d_1	Bore D	Nominal seal width b	**Design and lip material**	**Designation**
in.			–	–
1.969	2.623	0.313	CRWA1 R	**19607**
2.000	2.500	0.438	CRW1 S	**19739**
	2.502	0.313	CRW1 P	**19745**
	2.623	0.313	CRW1 R	**19760**
	2.623	0.313	CRWA1 R	**19762**
	2.623	0.313	CRWA1 V	**19777**
	2.623	0.313	CRWA1 V	**19782**
	2.686	0.375	CRW1 R	**19778**
	2.716	0.375	CRW1 R	**19785**
	2.716	0.375	CRWA1 R	**19786**
	2.746	0.375	CRW1 S	**19807**
	2.750	0.313	CRW1 V	**19823**
	2.750	0.313	CRW1 R	**19831**
	2.750	0.313	CRWA1 R	**19832**
	2.750	0.313	CRWA1 V	**19839**
	2.750	0.313	CRW1 V	**19840**
	2.835	0.469	CRWH1 R	**19848**
	2.875	0.313	CRW1 V	**19884**
	2.875	0.313	CRW1 R	**19886**
	2.875	0.313	CRWA1 R	**19887**
	2.875	0.375	CRWHA1 R	**19896**
	2.875	0.500	CRWH1 R	**19900**
	2.880	0.375	CRWA1 R	**19922**
	2.880	0.375	CRWA1 P	**19923**
	2.997	0.375	CRWH1 R	**19969**
	2.997	0.375	CRWHA1 R	**19970**
	2.997	0.375	CRWH1 V	**19979**
	3.000	0.313	CRW1 R	**19992**
	3.000	0.313	CRWA1 R	**19993**
	3.000	0.313	CRWA1 V	**19995**

Dimensions Shaft d_1	Bore D	Nominal seal width b	Design and lip material	Designation
in.			–	–
2.000	3.000	0.375	CRWH1 V	**20002**
cont.	3.000	0.375	CRWH1 R	**20004**
	3.000	0.375	CRWHA1 R	**20005**
	3.061	0.375	CRW1 R	**20045**
	3.061	0.500	CRWH1 R	**20055**
	3.061	0.500	CRWHA1 R	**20059**
	3.125	0.375	CRW1 R	**20070**
	3.150	0.375	CRW1 R	**20079**
	3.189	0.469	CRWH1 R	**20098**
	3.189	0.469	CRWHA1 R	**20100**
	3.251	0.438	CRWH1 R	**20109**
	3.371	0.438	CRW1 V	**20122**
	3.371	0.438	CRWH1 R	**20124**
	3.371	0.438	CRWHA1 R	**20125**
	3.371	0.438	CRWH1 V	**20127**[1]
	3.543	0.438	CRWH1 R	**20140**
	3.623	0.438	CRWH1 R	**20144**
	4.003	0.438	CRWH1 R	**20158**
2.047	2.561	0.315	CRW1 R	**20420**
2.063	2.561	0.313	CRW1 V	**20520**
	2.750	0.313	CRWH1 R	**20530**[1]
	2.842	0.438	CRWH1 R	**20538**
	2.875	0.438	CRWH1 R	**20554**
	2.997	0.438	CRWH1 R	**20586**
	3.000	0.375	CRW1 R	**20594**
	3.000	0.375	CRWA1 V	**20596**
	3.061	0.313	CRWH1 R	**20643**
	3.125	0.375	CRW1 R	**20659**
	3.189	0.375	CRW1 R	**20702**
	3.251	0.438	CRWHA1 R	**20747**
	3.251	0.438	CRWH1 R	**20749**
2.125	2.750	0.375	CRW1 V	**21063**[1]
	2.750	0.500	CRWA1 R	**21061**
	2.763	0.250	CRW1 R	**21069**
	2.875	0.375	CRW1 S	**21103**
	2.875	0.438	CRW1 V	**21091**
	2.875	0.438	CRW1 R	**21098**
	2.875	0.438	CRWA1 R	**21100**
	2.875	0.438	CRWHA1 R	**21108**
	2.997	0.438	CRWH1 R	**21134**
	2.997	0.438	CRWHA1 R	**21136**
	3.000	0.313	CRWHA1 V	**21167**
	3.000	0.375	CRW1 R	**21163**
	3.000	0.375	CRWA1 R	**21164**
	3.000	0.438	CRWH1 V	**21171**
	3.000	0.438	CRWH1 R	**21172**
	3.000	0.438	CRWHA1 R	**21173**

[1] Without SKF Bore Tite Coating

Radial shaft seals – CRW1, CRWA1, CRWH1 and CRWHA1 – inch dimensions
d_1 **2.125 – 2.328** in.

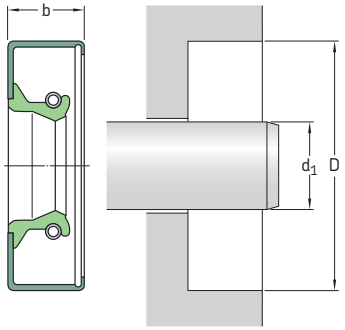

Please see **pages 74** to **76** for housing bore requirements.

Dimensions			Design and lip material	Designation
Shaft	Bore	Nominal seal width		
d_1	D	b		
in.			–	–
2.125	3.061	0.438	CRWH1 V	**21215**
cont.	3.061	0.500	CRW1 R	**21210**
	3.061	0.500	CRWA1 R	**21211**[1]
	3.061	0.500	CRWHA1 R	**21213**
	3.125	0.438	CRWH1 R	**21234**
	3.125	0.438	CRWHA1 P	**21245**
	3.189	0.375	CRWA1 R	**21267**
	3.189	0.375	CRWA1 V	**21269**
	3.189	0.469	CRWHA1 S	**21270**
	3.251	0.438	CRWH1 R	**21302**
	3.350	0.438	CRWH1 R	**21336**
	3.371	0.375	CRWA1 R	**21352**
	3.371	0.438	CRWH1 R	**21353**
	3.543	0.438	CRWH1 R	**21358**
2.188	2.875	0.438	CRWH1 R	**21736**
	2.997	0.438	CRWH1 R	**21749**
	3.000	0.375	CRWA1 R	**21759**
	3.000	0.375	CRWA1 V	**21763**
	3.000	0.500	CRWH1 R	**21764**
	3.061	0.500	CRWH1 R	**21787**
	3.251	0.438	CRWH1 R	**21840**
	3.350	0.438	CRWH1 R	**21890**
	3.371	0.438	CRWH1 R	**21910**
2.250	2.875	0.313	CRWA1 R	**22328**
	2.891	0.563	CRWA1 R	**22347**
	2.997	0.438	CRWH1 R	**22336**
	2.997	0.438	CRWHA1 R	**22340**
	3.000	0.375	CRW1 R	**22353**
	3.000	0.375	CRWA1 R	**22354**
	3.000	0.375	CRWA1 V	**22361**
	3.000	0.375	CRW1 V	**22363**

[1] Without SKF Bore Tite Coating

Dimensions Shaft d_1	Bore D	Nominal seal width b	Design and lip material	Designation
in.			–	–
2.250 cont.	3.000	0.438	CRWH1 R	**22358**
	3.000	0.438	CRWHA1 R	**22359**
	3.000	0.438	CRWH1 V	**22367**
	3.061	0.375	CRW1 R	**22382**
	3.061	0.438	CRWH1 R	**22390**
	3.061	0.438	CRWHA1 R	**22391**
	3.061	0.438	CRWHA1 S	**22394**
	3.125	0.375	CRWA1 R	**22400**
	3.125	0.375	CRWA1 V	**22405**
	3.125	0.500	CRWH1 R	**22407**[1]
	3.189	0.438	CRW1 R	**22424**
	3.189	0.438	CRWA1 P	**22425**
	3.251	0.375	CRW1 R	**22440**
	3.251	0.375	CRWA1 R	**22441**
	3.251	0.438	CRWH1 R	**22446**
	3.251	0.438	CRWHA1 R	**22448**
	3.251	0.438	CRWH1 V	**22449**
	3.350	0.375	CRW1 P	**22484**
	3.350	0.438	CRWH1 R	**22492**[1]
	3.350	0.438	CRWHA1 R	**22493**
	3.350	0.438	CRWH1 V	**22495**
	3.371	0.438	CRWHA1 R	**22532**
	3.371	0.438	CRWH1 R	**22558**
	3.371	0.438	CRWH1 V	**22561**
	3.500	0.438	CRWHA1 R	**22582**
	3.500	0.438	CRWH1 R	**22583**
	3.500	0.438	CRWHA1 V	**22590**
	3.565	0.438	CRWA1 R	**22610**
	3.623	0.438	CRWH1 R	**22618**
	3.623	0.438	CRWHA1 R	**22619**
	3.751	0.438	CRWH1 R	**22626**
	3.876	0.438	CRWH1 R	**22644**
	4.003	0.438	CRWH1 R	**22647**
2.313	2.997	0.375	CRW1 R	**23030**
	3.000	0.438	CRWH1 V	**23040**
	3.061	0.313	CRW1 R	**23046**
	3.125	0.375	CRW1 R	**23061**
	3.125	0.375	CRWA1 V	**23063**
	3.251	0.438	CRWH1 R	**23093**
	3.251	0.438	CRWHA1 V	**23099**[1]
	3.350	0.438	CRWH1 R	**23152**
	3.371	0.438	CRW1 R	**23167**
	3.374	0.438	CRWHA1 R	**23169**
	3.500	0.313	CRW1 R	**23184**[1]
	3.751	0.500	CRW1 R	**23277**
2.328	3.000	0.395	CRW1 P	**23300**

[1] Without SKF Bore Tite Coating

Radial shaft seals – CRW1, CRWA1, CRWH1 and CRWHA1 – inch dimensions
d_1 **2.375 – 2.500** in.

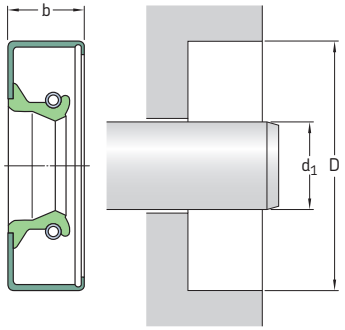

Please see **pages 74** to **76** for housing bore requirements.

Dimensions Shaft d_1	Bore D	Nominal seal width b	**Design and lip material**	**Designation**
in.			–	–
2.375	2.997	0.438	CRWH1 R	**23632**
	3.000	0.375	CRW1 V	**23641**
	3.061	0.438	CRWH1 R	**23644**
	3.061	0.438	CRWH1 P	**23645**
	3.061	0.438	CRWH1 V	**23655**
	3.125	0.375	CRW1 R	**23646**
	3.125	0.438	CRWH1 R	**23652**
	3.125	0.438	CRWHA1 R	**23654**
	3.125	0.438	CRWHA1 V	**23656**
	3.189	0.438	CRWH1 R	**23666**
	3.251	0.438	CRWHA1 V	**23678**
	3.251	0.453	CRW1 P	**23685**
	3.350	0.375	CRW1 R	**23701**
	3.350	0.375	CRWA1 R	**23702**
	3.350	0.375	CRW1 P	**23703**
	3.350	0.375	CRW1 S	**23706**
	3.350	0.438	CRWH1 R	**23708**
	3.350	0.438	CRWHA1 R	**23710**
	3.371	0.438	CRWH1 R	**23742**
	3.371	0.438	CRWH1 V	**23746**
	3.481	0.438	CRWH1 R	**23755**
	3.481	0.438	CRWHA1 R	**23756**[1)]
	3.500	0.375	CRWA1 P	**23770**
	3.500	0.375	CRWH1 V	**23771**
	3.500	0.375	CRWH1 R	**23779**
	3.500	0.438	CRWHA1 R	**23782**
	3.543	0.438	CRWH1 R	**23808**
	3.543	0.438	CRWHA1 V	**23809**
	3.601	0.438	CRW1 R	**23820**
	3.623	0.438	CRWH1 R	**23839**

[1)] Without SKF Bore Tite Coating

Dimensions Shaft d_1	Bore D	Nominal seal width b	Design and lip material	Designation
in.			–	–
2.375	3.623	0.438	CRWHA1 P	**23841**
cont.	3.623	0.438	CRWHA1 V	**23843**
	3.876	0.438	CRWH1 R	**23844**
2.438	3.125	0.500	CRWH1 R	**24255**
	3.251	0.438	CRWH1 R	**24263**
	3.350	0.375	CRW1 R	**24286**
	3.350	0.375	CRWA1 R	**24287**
	3.371	0.438	CRWH1 R	**24320**
	3.481	0.438	CRWH1 R	**24340**
	3.500	0.438	CRWH1 R	**24370**
	3.500	0.438	CRWH1 V	**24372**
	3.543	0.438	CRWH1 R	**24445**
2.500	3.189	0.438	CRWH1 R	**24881**
	3.189	0.438	CRWH1 V	**24883**
	3.245	0.438	CRWH1 R	**24889**
	3.251	0.375	CRW1 R	**24897**
	3.251	0.375	CRWA1 R	**24898**
	3.251	0.375	CRWA1 V	**24899**
	3.251	0.438	CRWH1 R	**24910**
	3.251	0.438	CRWHA1 R	**24911**
	3.251	0.438	CRWH1 V	**24914**
	3.251	0.438	CRWHA1 V	**24916**
	3.251	0.500	CRW1 V	**24913**
	3.350	0.438	CRWH1 R	**24931**
	3.350	0.438	CRWHA1 R	**24932**
	3.371	0.375	CRWHA1 R	**24934**[1]
	3.371	0.438	CRWHA1 V	**24936**
	3.371	0.438	CRWH1 R	**24954**
	3.428	0.375	CRWA1 P	**24949**
	3.428	0.375	CRWA1 R	**24951**
	3.500	0.375	CRWA1 V	**24971**
	3.500	0.438	CRW1 R	**24980**
	3.500	0.438	CRWA1 R	**24982**
	3.500	0.438	CRWH1 V	**24984**
	3.500	0.438	CRWH1 R	**24986**
	3.500	0.438	CRWHA1 R	**24988**
	3.500	0.438	CRWH1 P	**24989**
	3.500	0.438	CRWHA1 V	**24990**
	3.502	0.406	CRW1 S	**25082**
	3.543	0.438	CRWH1 R	**25043**
	3.543	0.438	CRWHA1 P	**25065**[1]
	3.544	0.433	CRWA1 V	**25037**
	3.623	0.375	CRW1 R	**25074**
	3.623	0.375	CRWA1 R	**25075**
	3.623	0.375	CRWA1 V	**25076**
	3.623	0.438	CRWH1 R	**25071**[1]
	3.751	0.438	CRWH1 R	**25091**[1]
	3.876	0.438	CRWH1 R	**25100**
	3.876	0.469	CRWHA1 P	**25102**
	4.003	0.375	CRWA1 R	**25108**
	4.003	0.375	CRWA1 V	**25110**

[1] Without SKF Bore Tite Coating

Radial shaft seals – CRW1, CRWA1, CRWH1 and CRWHA1 – inch dimensions
d_1 **2.563 – 2.750** in.

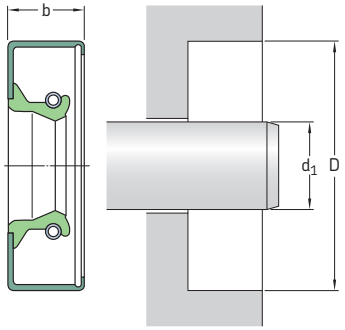

Please see **pages 74** to **76** for housing bore requirements.

Dimensions Shaft d_1	Bore D	Nominal seal width b	**Design and lip material**	**Designation**
in.			–	–
2.563	3.481	0.500	CRWHA1 R	**25561**
	3.500	0.438	CRWH1 R	**25597**
	3.623	0.438	CRWH1 R	**25641**
	3.623	0.469	CRWA1 P	**25661**
	3.751	0.438	CRWH1 R	**25713**
	3.751	0.438	CRWHA1 R	**25714**
	3.751	0.438	CRWH1 V	**25725**
	3.873	0.438	CRWHA1 R	**25745**[1)]
	3.876	0.438	CRWH1 R	**25748**
2.598	3.481	0.438	CRWHA1 P	**25970**
2.607	3.350	0.375	CRWH1 P	**25950**
2.625	3.251	0.438	CRWH1 R	**26110**
	3.350	0.375	CRW1 V	**26122**
	3.350	0.375	CRW1 R	**26123**
	3.350	0.375	CRWA1 R	**26124**
	3.350	0.438	CRW1 R	**26128**[1)]
	3.371	0.438	CRWHA1 R	**26153**
	3.374	0.438	CRWHA1 R	**26141**
	3.481	0.438	CRWH1 R	**26163**
	3.500	0.375	CRW1 V	**26177**
	3.500	0.375	CRWA1 R	**26186**
	3.500	0.438	CRWH1 R	**26189**
	3.500	0.438	CRWHA1 R	**26190**
	3.500	0.438	CRWA1 P	**26191**
	3.543	0.438	CRWH1 R	**26194**
	3.623	0.375	CRW1 V	**26204**
	3.623	0.375	CRWA1 P	**26220**
	3.623	0.375	CRW1 R	**26237**

[1)] Without SKF Bore Tite Coating

Dimensions			Design and	Designation
Shaft	Bore	Nominal seal width	lip material	
d_1	D	b		
in.			–	–
2.625 cont.	3.623	0.375	CRWA1 R	**26238**
	3.623	0.438	CRWH1 V	**26208**
	3.623	0.438	CRWH1 R	**26209**
	3.623	0.438	CRWHA1 R	**26211**
	3.751	0.375	CRWA1 R	**26284**
	3.751	0.438	CRWH1 R	**26297**
	3.751	0.438	CRWHA1 R	**26298**
	3.751	0.438	CRWHA1 V	**26299**
	3.876	0.438	CRWH1 R	**26328**
	3.936	0.438	CRWH1 R	**26346**
	4.003	0.375	CRWA1 R	**26354**
	4.003	0.438	CRWH1 R	**26356**
	4.370	0.438	CRWHA1 R	**26359**
	4.438	0.438	CRWH1 R	**26368**
2.688	3.751	0.438	CRWH1 R	**26761**
	3.876	0.438	CRWH1 R	**26921**
	4.003	0.469	CRWH1 R	**26975**
2.750	3.481	0.438	CRW1 R	**27251**[1]
	3.500	0.375	CRW1 R	**27268**
	3.500	0.375	CRWA1 R	**27269**
	3.500	0.375	CRWA1 V	**27272**
	3.500	0.438	CRWH1 R	**27280**
	3.538	0.438	CRWH1 R	**27284**
	3.543	0.438	CRWH1 P	**27292**
	3.543	0.438	CRWH1 V	**27293**
	3.543	0.438	CRWHA1 P	**27295**
	3.623	0.438	CRWH1 V	**27324**
	3.623	0.438	CRWH1 R	**27334**
	3.751	0.438	CRW1 R	**27361**
	3.751	0.438	CRWA1 R	**27362**
	3.751	0.438	CRWH1 V	**27365**
	3.751	0.438	CRWH1 R	**27368**
	3.751	0.438	CRWHA1 R	**27370**
	3.751	0.438	CRWA1 P	**27377**
	3.765	0.438	CRWH1 R	**27426**
	3.876	0.433	CRWHA1 P	**27452**
	3.876	0.438	CRWA1 R	**27467**
	3.876	0.438	CRWH1 R	**27470**
	3.876	0.438	CRWHA1 R	**27471**
	3.936	0.438	CRWH1 R	**27525**
	3.937	0.438	CRWA1 P	**27526**
	4.003	0.375	CRWA1 V	**27539**
	4.003	0.438	CRWH1 R	**27541**
	4.003	0.438	CRWHA1 P	**27565**[1]
	4.249	0.438	CRWH1 R	**27600**
	4.249	0.438	CRWHA1 P	**27601**
	4.331	0.500	CRWHA1 R	**27625**
	4.500	0.469	CRWH1 R	**28848**

[1] Without SKF Bore Tite Coating

Radial shaft seals – CRW1, CRWA1, CRWH1 and CRWHA1 – inch dimensions
d_1 **2.813 – 3.125** in.

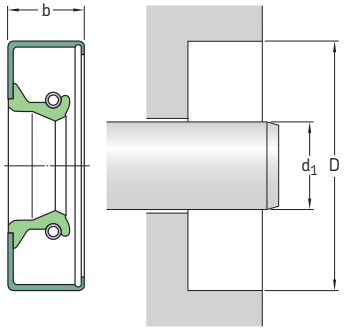

Please see **pages 74** to **76** for housing bore requirements.

Dimensions Shaft d_1	Bore D	Nominal seal width b	**Design and lip material**	**Designation**
in.			–	–
2.813	3.751	0.438	CRWH1 R	**28035**
	3.876	0.438	CRWH1 R	**28116**
	4.003	0.438	CRWH1 R	**28175**
	4.249	0.313	CRW1 R	**28270**
	4.249	0.438	CRWH1 R	**28275**
	4.250	0.438	CRWH1 P	**28276**
2.844	3.939	0.500	CRWA1 R	**28425**
	3.939	0.550	CRWHA1 R	**28426**
	4.003	0.438	CRWH1 R	**28464**
	4.003	0.500	CRWH1 V	**28474**
2.875	3.623	0.438	CRWH1 R	**28654**
	3.623	0.438	CRWHA1 R	**28655**
	3.751	0.375	CRWA1 R	**28669**
	3.751	0.375	CRWA1 V	**28670**
	3.751	0.438	CRWH1 R	**28686**
	3.751	0.438	CRWHA1 R	**28687**
	3.751	0.438	CRWH1 P	**28697**
	3.751	0.438	CRWH1 V	**28698**
	3.751	0.438	CRWHA1 V	**28699**
	3.876	0.438	CRWH1 R	**28745**
	3.876	0.438	CRWHA1 R	**28746**
	3.876	0.438	CRWHA1 V	**28748**
	4.003	0.375	CRWA1 R	**28778**
	4.003	0.375	CRWA1 V	**28779**
	4.003	0.438	CRWH1 R	**28760**
	4.003	0.438	CRWHA1 R	**28761**
	4.125	0.375	CRWH1 R	**28817**
	4.331	0.438	CRWA1 P	**28841**

Dimensions Shaft d_1	Bore D	Nominal seal width b	Design and lip material	Designation
in.			–	–
2.938	3.623	0.375	CRW1 R	**29218**
	3.751	0.375	CRW1 R	**29223**
	3.751	0.375	CRWA1 R	**29224**
	3.751	0.375	CRWA1 V	**29226**
	3.876	0.375	CRWHA1 R	**29263**[1)]
	3.876	0.375	CRWHA1 V	**29262**
	3.937	0.438	CRWA1 P	**29273**
	4.003	0.438	CRWH1 R	**29316**
	4.003	0.438	CRWHA1 R	**29393**[1)]
	4.003	0.438	CRWA1 P	**29350**
	4.004	0.433	CRWHA1 V	**29383**
	4.125	0.375	CRWH1 R	**29184**
	4.125	0.375	CRWHA1 R	**29385**
	4.501	0.438	CRWH1 R	**29465**
3.000	3.500	0.375	CRW1 V	**29841**
	3.751	0.375	CRW1 R	**29865**[1)]
	3.751	0.375	CRWA1 R	**29866**
	3.751	0.375	CRWA1 P	**29867**
	3.751	0.375	CRW1 V	**29868**
	3.751	0.375	CRWA1 V	**29870**
	3.751	0.438	CRWH1 R	**29871**
	3.751	0.438	CRWHA1 R	**29872**
	3.876	0.313	CRW1 V	**29877**
	3.876	0.438	CRWH1 R	**29887**
	3.876	0.469	CRWH1 V	**29891**
	4.003	0.375	CRW1 R	**29906**
	4.003	0.375	CRWA1 R	**29907**
	4.003	0.375	CRWA1 V	**29912**
	4.003	0.375	CRWH1 P	**29950**
	4.003	0.438	CRWHA1 P	**29925**[1)]
	4.003	0.438	CRWH1 R	**29951**[1)]
	4.003	0.438	CRWHA1 R	**29952**
	4.003	0.438	CRWH1 V	**29958**
	4.125	0.438	CRWH1 R	**30000**
	4.125	0.438	CRWH1 V	**30003**
	4.249	0.438	CRWH1 R	**30033**[1)]
	4.249	0.438	CRWHA1 P	**30056**
	4.331	0.438	CRWH1 R	**30060**
	4.376	0.438	CRWH1 R	**30070**
	4.500	0.438	CRWH1 R	**30087**
	4.500	0.438	CRWHA1 R	**30095**
	4.501	0.438	CRWH1 V	**30098**
	4.999	0.438	CRWH1 R	**30125**
3.125	3.811	0.355	CRW1 V	**31132**
	3.811	0.355	CRW1 R	**31135**
	4.003	0.375	CRWA1 R	**31139**
	4.003	0.375	CRWHA1 V	**31152**
	4.003	0.438	CRWH1 R	**31147**
	4.003	0.438	CRWHA1 R	**31148**

[1)] Without SKF Bore Tite Coating

Radial shaft seals – CRW1, CRWA1, CRWH1 and CRWHA1 – inch dimensions
d_1 **3.125 – 3.500** in.

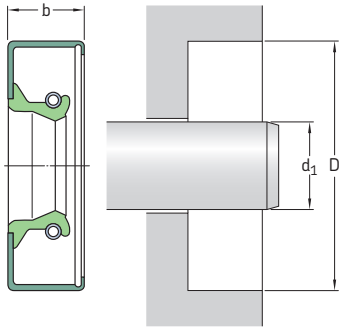

Please see **pages 74** to **76** for housing bore requirements.

Dimensions Shaft d_1	Bore D	Nominal seal width b	**Design and lip material**	**Designation**
in.			–	–
3.125	4.125	0.375	CRW1 R	**31177**
cont.	4.125	0.375	CRWA1 V	**31179**
	4.125	0.438	CRWHA1 P	**31173**
	4.125	0.438	CRWHA1 S	**31185**
	4.125	0.438	CRWH1 R	**31189**[1)]
	4.249	0.438	CRWH1 R	**31227**
	4.249	0.438	CRWHA1 R	**31228**
	4.249	0.438	CRWHA1 V	**31237**
	4.376	0.438	CRWH1 R	**31250**
	4.376	0.438	CRWHA1 P	**31261**
	4.501	0.438	CRWH1 R	**31269**
	4.626	0.438	CRWH1 R	**31299**
	4.751	0.438	CRWH1 R	**31327**
	4.999	0.438	CRWH1 R	**31333**
	5.251	0.438	CRWH1 R	**31353**
3.150	3.946	0.394	CRW1 V	**31511**
3.188	4.249	0.438	CRWH1 R	**31758**
	4.376	0.438	CRWH1 R	**31825**
	4.501	0.438	CRWH1 R	**31855**
	4.626	0.438	CRWH1 R	**31870**
	4.999	0.438	CRWH1 R	**31955**
3.250	3.876	0.375	CRW1 P	**32330**
	4.003	0.375	CRW1 R	**32344**
	4.003	0.375	CRWA1 P	**32347**
	4.249	0.375	CRWA1 V	**32392**
	4.249	0.375	CRW1 R	**32393**
	4.249	0.375	CRWA1 R	**32395**
	4.249	0.438	CRWH1 P	**32380**[1)]
	4.249	0.438	CRWHA1 P	**32385**
	4.249	0.438	CRWH1 R	**32396**
	4.249	0.438	CRWHA1 R	**32397**
	4.249	0.438	CRWH1 V	**32403**

[1)] Without SKF Bore Tite Coating

Dimensions Shaft d_1	Bore D	Nominal seal width b	Design and lip material	Designation
in.			–	–
3.250 cont.	4.376	0.438	CRWH1 R	**32424**
	4.500	0.438	CRWA1 P	**32448**
	4.501	0.375	CRW1 R	**32477**
	4.501	0.438	CRWH1 R	**32501**
	4.501	0.438	CRWHA1 R	**32502**
	4.626	0.433	CRWHA1 R	**32514**[1]
	4.626	0.438	CRWH1 R	**32540**
	4.718	0.438	CRWH1 R	**32555**
	4.751	0.438	CRWH1 R	**32560**
	4.999	0.438	CRWH1 R	**32582**
	4.999	0.438	CRWHA1 R	**32583**
3.313	4.125	0.438	CRWH1 R	**33033**
	4.249	0.438	CRWH1 R	**33073**
	4.500	0.438	CRWH1 R	**33136**
	4.999	0.438	CRWH1 R	**33306**
3.375	4.125	0.375	CRW1 R	**33645**
	4.125	0.375	CRWA1 V	**34647**
	4.249	0.438	CRWHA1 R	**33665**
	4.280	0.406	CRWA1 S	**33654**
	4.376	0.375	CRWA1 V	**33699**
	4.376	0.375	CRW1 R	**33700**
	4.376	0.375	CRWA1 R	**33701**
	4.376	0.438	CRWH1 R	**33711**
	4.376	0.438	CRWHA1 R	**33712**
	4.501	0.438	CRWA1 V	**33733**
	4.501	0.438	CRWH1 R	**33735**
	4.626	0.438	CRWH1 R	**33772**
	4.626	0.438	CRWHA1 R	**33773**
	4.626	0.438	CRWHA1 V	**33775**
	4.686	0.438	CRWH1 R	**33807**[1]
	4.999	0.438	CRWH1 R	**33837**[1]
	5.251	0.438	CRWHA1 R	**33866**
3.438	4.249	0.375	CRW1 R	**34256**
	4.501	0.375	CRWA1 R	**34279**
	4.501	0.438	CRWH1 R	**34282**
	4.501	0.438	CRWHA1 R	**34283**
	4.626	0.438	CRWH1 R	**34336**
	4.626	0.438	CRWHA1 R	**34338**
	4.751	0.438	CRWA1 R	**34379**
	4.756	0.438	CRWH1 R	**34383**
	4.876	0.438	CRWH1 R	**34398**
	4.999	0.438	CRWH1 R	**34407**
	4.999	0.438	CRWHA1 R	**34408**
3.500	4.249	0.438	CRWHA1 V	**34857**
	4.376	0.375	CRW1 R	**34860**
	4.376	0.375	CRWA1 R	**34861**
	4.376	0.375	CRWA1 V	**34866**
	4.376	0.433	CRWHA1 V	**34869**
	4.376	0.438	CRWH1 R	**34867**
	4.376	0.438	CRWHA1 R	**34868**

[1] Without SKF Bore Tite Coating

Radial shaft seals – CRW1, CRWA1, CRWH1 and CRWHA1 – inch dimensions
d_1 **3.500 – 3.875** in.

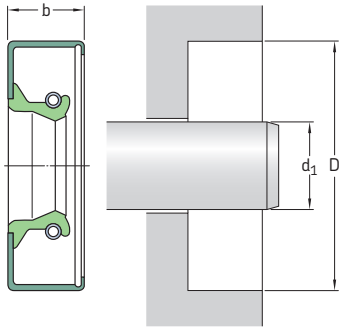

Please see **pages 74** to **76** for housing bore requirements.

Dimensions Shaft d_1	Bore D	Nominal seal width b	**Design and lip material**	**Designation**
in.			–	–
3.500	4.501	0.375	CRWA1 V	**34883**
cont.	4.501	0.375	CRW1 R	**34886**
	4.501	0.375	CRWA1 R	**34887**
	4.501	0.438	CRWH1 R	**34888**
	4.501	0.438	CRWHA1 R	**34889**
	4.501	0.438	CRWHA1 P	**34891**[1]
	4.501	0.438	CRWH1 V	**34892**
	4.626	0.438	CRWH1 R	**34985**
	4.751	0.375	CRWA1 V	**35039**
	4.751	0.375	CRWA1 P	**35040**
	4.751	0.438	CRWH1 R	**35012**
	4.751	0.438	CRWHA1 R	**35020**
	4.751	0.625	CRWH1 R	**35029**
	4.999	0.438	CRWA1 V	**35080**
	4.999	0.438	CRWH1 R	**35082**
	4.999	0.438	CRWHA1 P	**35083**
	5.126	0.438	CRWH1 R	**35086**
	5.126	0.438	CRWHA1 R	**35095**
	5.251	0.438	CRWH1 R	**35096**
3.563	4.501	0.438	CRWH1 R	**35556**
	4.626	0.438	CRWH1 R	**35593**
	4.751	0.438	CRWH1 R	**35649**
	4.876	0.438	CRWH1 R	**35676**
	4.999	0.438	CRWH1 R	**35716**
3.625	4.376	0.375	CRWA1 V	**36153**
	4.376	0.375	CRWA1 R	**36155**
	4.376	0.375	CRWH1 R	**36157**
	4.376	0.375	CRWH1 P	**36158**
	4.501	0.375	CRW1 R	**36166**

[1] Without SKF Bore Tite Coating

Dimensions Shaft d_1	Bore D	Nominal seal width b	Design and lip material	Designation
in.			–	–
3.625 cont.	4.626	0.375	CRW1 R	**36177**
	4.626	0.375	CRWA1 V	**36179**
	4.626	0.438	CRWH1 R	**36185**
	4.626	0.438	CRWHA1 R	**36186**
	4.751	0.438	CRWH1 R	**36220**
	4.751	0.500	CRWA1 S	**36234**
	4.876	0.438	CRWH1 R	**36314**
	4.999	0.375	CRWA1 V	**36359**
	4.999	0.375	CRWA1 R	**36361**
	4.999	0.438	CRWH1 R	**36363**
	4.999	0.438	CRWHA1 R	**36364**
	5.251	0.375	CRWA1 R	**36382**
	5.375	0.438	CRWHA1 R	**36391**
3.688	4.501	0.438	CRWHA1 R	**36740**
	4.751	0.438	CRWH1 R	**36770**
	4.999	0.438	CRWH1 R	**36880**
	5.126	0.438	CRWA1 R	**36895**
	5.626	0.438	CRWA1 R	**36910**
3.750	4.501	0.375	CRW1 R	**37327**[1]
	4.501	0.375	CRW1 V	**37328**
	4.501	0.469	CRWHA1 P	**37330**
	4.502	0.469	CRWHA1 V	**37332**
	4.750	0.438	CRWHA1 P	**37403**
	4.751	0.375	CRW1 P	**37387**
	4.751	0.375	CRW1 R	**37388**
	4.751	0.375	CRWA1 R	**37389**
	4.751	0.438	CRWA1 P	**37390**
	4.751	0.438	CRWHA1 S	**37395**
	4.751	0.438	CRWH1 R	**37396**
	4.751	0.438	CRWH1 V	**37405**
	4.876	0.438	CRWH1 R	**37433**
	4.999	0.375	CRW1 V	**37524**
	4.999	0.375	CRW1 R	**37525**
	4.999	0.375	CRWA1 R	**37526**
	4.999	0.438	CRWH1 R	**37532**
	4.999	0.438	CRWHA1 R	**37533**
	5.251	0.438	CRWH1 R	**37574**
	5.251	0.438	CRWH1 V	**37577**
3.875	4.751	0.375	CRW1 R	**38646**
	4.751	0.375	CRWA1 R	**38647**
	4.751	0.375	CRWA1 V	**38649**
	4.751	0.438	CRWH1 R	**38653**
	4.876	0.438	CRWHA1 R	**38673**
	4.876	0.500	CRWH1 R	**38669**
	4.876	0.500	CRWHA1 V	**38678**
	4.999	0.375	CRW1 R	**38691**
	4.999	0.375	CRWA1 R	**38692**
	4.999	0.375	CRWA1 V	**38694**
	5.126	0.438	CRWHA1 V	**38702**
	5.126	0.438	CRWH1 R	**38703**
	5.126	0.438	CRWHA1 R	**38713**

[1] Without SKF Bore Tite Coating

Radial shaft seals – CRW1, CRWA1, CRWH1 and CRWHA1 – inch dimensions
d_1 **3.875 – 4.477** in.

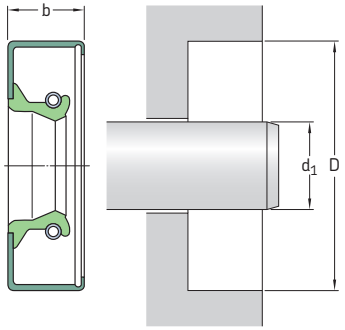

Please see **pages 74** to **76** for housing bore requirements.

Dimensions Shaft d_1	Bore D	Nominal seal width b	**Design and lip material**	**Designation**
in.			–	–
3.875	5.251	0.438	CRWH1 R	**38730**
cont.	5.251	0.438	CRWHA1 R	**38731**
	5.251	0.438	CRWHA1 P	**38739**
	5.376	0.438	CRWH1 R	**38745**
	5.626	0.433	CRWHA1 R	**38758**
	5.690	0.500	CRWH1 R	**38774**
3.938	4.876	0.438	CRWH1 R	**39245**
	4.999	0.438	CRWH1 R	**39275**
	4.999	0.438	CRWH1 V	**39276**
	4.999	0.438	CRWH1 R	**39277**
	5.126	0.472	CRWHA1 V	**39304**
	5.251	0.438	CRWH1 R	**39320**
	5.375	0.438	CRWH1 R	**39350**
	5.501	0.438	CRWH1 R	**39423**
4.000	4.876	0.438	CRW1 R	**39851**
	4.999	0.375	CRW1 P	**39895**
	4.999	0.375	CRWA1 V	**39921**
	4.999	0.375	CRW1 R	**39922**
	4.999	0.375	CRWA1 R	**39923**
	4.999	0.438	CRWHA1 P	**39930**
	4.999	0.438	CRWH1 V	**39932**
	4.999	0.438	CRWH1 R	**39933**
	4.999	0.438	CRWHA1 R	**39934**
	4.999	0.438	CRWH1 S	**39935**
	5.126	0.438	CRWH1 R	**39975**
	5.251	0.438	CRWH1 V	**39996**
	5.251	0.438	CRWH1 R	**39997**
	5.251	0.438	CRWA1 R	**40000**
	5.310	0.500	CRWHA1 R	**40020**
	5.376	0.438	CRWH1 R	**40036**
	5.501	0.438	CRWH1 R	**40049**

Dimensions Shaft d_1	Bore D	Nominal seal width b	Design and lip material	Designation
in.			–	–
4.000	5.626	0.375	CRWA1 R	**40077**
cont.	5.626	0.438	CRWH1 R	**40078**
	5.751	0.438	CRWH1 R	**40108**
	6.001	0.500	CRWH1 R	**40138**
	6.250	0.500	CRWH1 R	**40158**
4.125	4.999	0.438	CRWH1 R	**41125**
	4.999	0.438	CRWH1 V	**41126**[1]
	5.126	0.438	CRWH1 R	**41170**
	5.126	0.438	CRWH1 V	**41171**
	5.251	0.438	CRWH1 R	**41185**
	5.251	0.438	CRWH1 V	**41186**
	5.501	0.438	CRWH1 R	**41265**
	5.501	0.438	CRWH1 V	**41266**
	5.751	0.438	CRWH1 R	**41287**
	6.001	0.438	CRWH1 R	**41305**
	6.001	0.438	CRWH1 V	**41307**
4.250	5.251	0.375	CRWA1 R	**42419**
	5.251	0.375	CRW1 S	**42422**
	5.251	0.438	CRWH1 R	**42426**
	5.251	0.438	CRWHA1 R	**42427**
	5.251	0.438	CRWH1 V	**42433**
	5.373	0.438	CRWA1 V	**42474**
	5.376	0.438	CRWH1 R	**42475**
	5.501	0.438	CRWH1 R	**42528**
	5.626	0.438	CRWA1 R	**42557**
	5.751	0.438	CRWH1 R	**42573**
	5.876	0.500	CRWH1 V	**42592**
	6.001	0.500	CRWH1 R	**42616**
	6.126	0.500	CRWH1 R	**42635**
	6.250	0.500	CRWH1 R	**42644**
4.313	5.501	0.433	CRWHA1 P	**43072**
	5.501	0.438	CRWHA1 R	**43073**
4.331	5.626	0.472	CRWHA1 V	**43345**
4.375	5.376	0.438	CRWH1 R	**43650**
	5.501	0.438	CRWH1 R	**43691**
	5.751	0.438	CRWH1 R	**43751**
	6.001	0.500	CRWH1 R	**43771**
	6.063	0.500	CRWH1 R	**541974**[1]
	6.250	0.500	CRWH1 R	**43820**
4.438	5.501	0.500	CRWH1 R	**44275**
	5.501	0.500	CRWH1 V	**44276**
	5.751	0.500	CRWH1 R	**44295**
	6.001	0.500	CRWH1 R	**44320**
	6.250	0.500	CRWH1 R	**44350**
4.477	6.250	0.500	CRWH1 R	**44630**

[1] Without SKF Bore Tite Coating

Radial shaft seals – CRW1, CRWA1, CRWH1 and CRWHA1 – inch dimensions
d_1 **4.500 – 5.125** in.

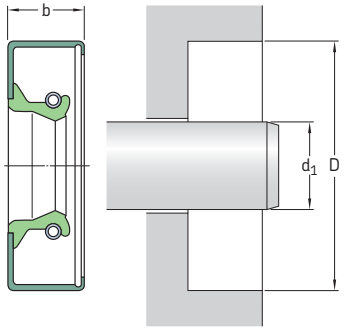

Please see **pages 74** to **76** for housing bore requirements.

Dimensions Shaft d_1	Bore D	Nominal seal width b	**Design and lip material**	**Designation**
in.			–	–
4.500	5.251	0.438	CRWH1 R	**44913**
	5.251	0.438	CRWHA1 V	**44917**
	5.376	0.438	CRWH1 R	**44920**
	5.376	0.438	CRWHA1 V	**44926**
	5.501	0.375	CRW1 R	**44959**
	5.501	0.375	CRWA1 R	**44960**
	5.501	0.435	CRWH1 V	**44980**
	5.501	0.438	CRWH1 R	**44967**
	5.501	0.438	CRWHA1 R	**44968**
	5.501	0.438	CRWH1 V	**44973**
	5.626	0.438	CRWH1 R	**45032**
	5.626	0.438	CRWHA1 V	**45033**
	5.751	0.375	CRWA1 V	**45064**
	5.751	0.438	CRWH1 R	**45069**
	5.751	0.438	CRWHA1 R	**45070**
	6.001	0.500	CRWH1 R	**45110**
	6.001	0.500	CRWHA1 R	**45111**
	6.001	0.500	CRWHA1 V	**45112**
	6.126	0.563	CRWH1 R	**45140**
	6.250	0.500	CRWH1 R	**45150**
4.625	5.626	0.500	CRWH1 R	**46144**
	5.626	0.500	CRWH1 V	**46155**
	5.751	0.500	CRWH1 R	**46200**
	5.751	0.500	CRWH1 S	**46208**
	6.001	0.500	CRWH1 R	**46285**
	6.250	0.500	CRWH1 R	**46324**
4.688	5.751	0.512	CRWH1 S	**46770**
	5.751	0.512	CRWH1 R	**46800**
	6.250	0.500	CRWH1 R	**46950**

Dimensions Shaft d_1	Bore D	Nominal seal width b	Design and lip material	Designation
in.			–	–
4.750	5.749	0.438	CRW1 P	**47375**
	5.751	0.500	CRW1 V	**47379**
	5.751	0.500	CRWA1 V	**47382**
	5.751	0.500	CRW1 R	**47383**
	5.751	0.500	CRWH1 R	**47394**
	5.751	0.500	CRWHA1 R	**47395**
	5.875	0.500	CRWH1 R	**47441**
	6.001	0.500	CRWH1 R	**47474**
	6.001	0.500	CRWHA1 R	**47475**
	6.001	0.500	CRW1 V	**47481**
	6.250	0.500	CRWH1 R	**47583**
	6.250	0.500	CRWHA1 V	**47586**
4.813	5.751	0.563	CRWH1 P	**48060**
	5.751	0.563	CRWH1 V	**48062**
	5.751	0.563	CRWH1 S	**48065**
4.875	6.001	0.500	CRWH1 V	**48692**
	6.001	0.500	CRWH1 R	**48693**
	6.126	0.500	CRWH1 R	**48726**
	6.250	0.500	CRWHA1 R	**48768**
	6.250	0.500	CRWH1 R	**48769**
	6.250	0.500	CRWH1 V	**48772**
4.921	6.375	0.500	CRWHA1 V	**49274**
4.938	6.001	0.500	CRWH1 R	**49251**
	6.250	0.500	CRWH1 R	**49301**
5.000	6.001	0.500	CRWHA1 V	**49927**
	6.001	0.500	CRWH1 R	**49928**
	6.001	0.500	CRWHA1 R	**49929**
	6.126	0.500	CRW1 V	**49960**
	6.250	0.500	CRWH1 R	**49966**
	6.250	0.500	CRW1 R	**49984**
	6.250	0.500	CRWA1 R	**49985**
	6.250	0.500	CRWH1 P	**49990**[1]
	6.250	0.500	CRWH1 V	**49991**
	6.250	0.500	CRWHA1 R	**49998**
	6.375	0.500	CRWH1 R	**50130**
	6.375	0.500	CRWHA1 R	**50138**
	6.500	0.500	CRWH1 R	**50148**
	6.500	0.500	CRWH1 V	**50151**
	6.750	0.500	CRWH1 R	**50168**
	6.750	0.500	CRWHA1 R	**50172**
5.063	6.126	0.500	CRWH1 R	**50618**
	6.375	0.500	CRWH1 R	**50650**
5.125	6.126	0.500	CRWHA1 R	**51240**
	6.126	0.500	CRW1 V	**51243**
	6.126	0.500	CRW1 R	**51247**
	6.250	0.500	CRWHA1 R	**51252**
	6.250	0.500	CRWA1 V	**51253**
	6.375	0.500	CRWH1 R	**51248**[1]
	6.375	0.500	CRWH1 V	**51255**

[1] Without SKF Bore Tite Coating

Radial shaft seals – CRW1, CRWA1, CRWH1 and CRWHA1 – inch dimensions
d_1 **5.188 – 7.000** in.

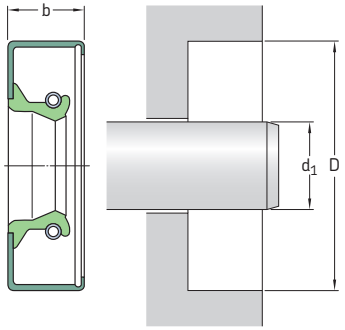

Please see **pages 74** to **76** for housing bore requirements.

Dimensions Shaft d_1	Bore D	Nominal seal width b	**Design and lip material**	**Designation**
in.			–	–
5.188	6.501	0.625	CRWH1 V	**51852**
5.250	6.001	0.375	CRW1 R	**52440**
	6.001	0.500	CRWH1 V	**52443**
	6.250	0.500	CRWH1 R	**52445**
	6.250	0.500	CRWH1 V	**52447**
	6.500	0.500	CRWH1 R	**52488**
	6.500	0.500	CRWH1 V	**52489**
	6.750	0.500	CRWH1 R	**52648**
	6.750	0.500	CRWH1 V	**52649**
5.375	6.625	0.500	CRWH1 R	**53701**
	6.625	0.500	CRWH1 V	**53702**
	6.750	0.500	CRWH1 V	**53771**
	6.750	0.500	CRWH1 R	**53775**
5.500	6.250	0.500	CRWA1 R	**54925**
	6.500	0.500	CRWH1 R	**54931**
	6.500	0.500	CRWH1 V	**54934**
	6.500	0.500	CRWH1 P	**54936**
	6.750	0.500	CRW1 R	**54959**
	6.750	0.500	CRWA1 R	**54960**
	6.750	0.500	CRWHA1 R	**54971**
	6.750	0.500	CRWH1 R	**54972**
	6.750	0.500	CRWH1 V	**54974**
5.512	6.693	0.472	CRWH1 V	**546747**[1)]
5.625	6.625	0.500	CRWH1 R	**56101**
	6.625	0.500	CRWH1 V	**56102**
	6.875	0.500	CRWH1 R	**56136**
	6.875	0.500	CRWH1 V	**56137**

[1)] Without SKF Bore Tite Coating

Dimensions Shaft d_1	Bore D	Nominal seal width b	Design and lip material	Designation
in.			–	–
5.625	7.125	0.500	CRWHA1 R	**56160**
cont.	7.125	0.500	CRWHA1 V	**56161**
5.750	6.625	0.500	CRWH1 R	**57505**
	6.625	0.500	CRW1 V	**57506**
	6.750	0.500	CRWH1 R	**57510**
	6.750	0.500	CRWH1 V	**57522**
	6.751	0.500	CRWHA1 R	**57509**[1]
	7.000	0.500	CRWH1 R	**57521**
	7.000	0.500	CRWH1 V	**57523**
	7.000	0.500	CRWHA1 R	**57531**
5.875	7.125	0.500	CRWH1 R	**58716**
	7.125	0.500	CRWH1 V	**58717**
	7.125	0.500	CRWHA1 R	**58741**
	7.500	0.500	CRWH1 R	**58760**
6.000	6.750	0.500	CRWA1 V	**59999**
	6.750	0.500	CRW1 V	**60000**
	7.500	0.500	CRWA1 R	**60016**
	7.500	0.500	CRWHA1 V	**60026**
	7.500	0.500	CRWHA1 R	**60028**
6.125	7.125	0.625	CRWH1 R	**61210**[1]
	7.625	0.625	CRWH1 R	**61255**[1]
	7.625	0.625	CRWH1 P	**61256**[1]
6.250	7.252	0.500	CRWH1 R	**62482**[1]
	7.500	0.500	CRWH1 R	**62495**[1]
	7.500	0.500	CRWH1 V	**62497**
	7.750	0.500	CRWH1 R	**62535**
	7.875	0.625	CRWH1 R	**62572**
6.375	7.375	0.625	CRWH1 R	**63700**
	7.875	0.563	CRWHA1 R	**63734**
	7.875	0.625	CRWH1 R	**63733**[1]
6.500	7.500	0.500	CRWA1 R	**64993**
	7.500	0.500	CRWH1 R	**64994**[1]
	7.500	0.500	CRWH1 V	**64998**
	8.000	0.500	CRW1 R	**65021**
	8.000	0.500	CRWHA1 R	**65037**[1]
6.625	8.125	0.500	CRWH1 R	**66241**[1]
6.750	8.000	0.500	CRWH1 R	**67515**
	8.250	0.500	CRWH1 R	**67533**[1]
6.875	8.375	0.500	CRWH1 R	**68745**[1]
7.000	8.000	0.630	CRWH1 R	**70016**
	8.250	0.625	CRWH1 R	**70028**[1]
	8.500	0.500	CRWA1 R	**70080**
	8.500	0.625	CRWH1 R	**70052**
	8.500	0.625	CRWHA1 R	**70053**
	8.500	0.625	CRWHA1 V	**70054**

[1] Without SKF Bore Tite Coating

Radial shaft seals – CRW1, CRWA1, CRWH1 and CRWHA1 – inch dimensions
d_1 **7.125 – 12.250** in.

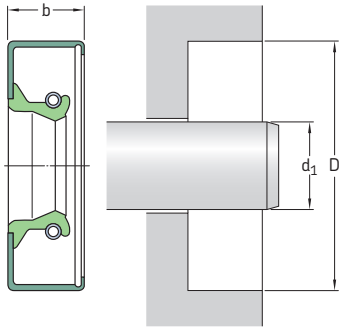

Please see **pages 74** to **76** for housing bore requirements.

Dimensions Shaft d_1	Bore D	Nominal seal width b	**Design and lip material**	**Designation**
in.			–	–
7.125	8.625	0.625	CRWH1 R	**71245**[1)]
7.250	8.250	0.625	CRW1 R	**72515**[1)]
	8.750	0.625	CRWHA1 R	**72539**
	8.750	0.750	CRWH1 P	**72542**[1)]
	9.055	0.625	CRWHA1 R	**72570**
7.375	8.875	0.625	CRWH1 R	**73745**[1)]
7.500	8.500	0.625	CRWH1 R	**75030**[1)]
	9.000	0.625	CRWH1 R	**75050**
	9.000	0.625	CRWHA1 P	**75052**
7.625	8.625	0.563	CRWH1 R	**76215**[1)]
	9.125	0.625	CRWH1 R	**76255**[1)]
7.750	9.250	0.625	CRWH1 R	**77540**[1)]
7.875	9.250	1.000	CRWHA1 R	**78725**[1)]
	9.375	0.625	CRWH1 R	**78738**[1)]
8.000	9.000	0.625	CRWH1 R	**79960**[1)]
	9.000	0.625	CRWHA1 R	**79961**[1)]
	9.250	0.625	CRWH1 R	**79997**[1)]
	9.250	0.625	CRWHA1 R	**79998**
	9.500	0.625	CRWH1 R	**80010**
	10.000	0.625	CRWHA1 R	**80038**[1)]
8.125	10.125	0.625	CRWH1 R	**81245**[1)]
	10.125	0.625	CRWHA1 R	**81246**[1)]
8.250	9.250	0.625	CRWH1 R	**82510**[1)]
	9.252	0.500	CRWH1 R	**82527**
	9.500	0.578	CRW1 R	**541405**[1)]
	10.250	0.625	CRWH1 R	**82560**[1)]

[1)] Without SKF Bore Tite Coating

Dimensions			Design and lip material	Designation
Shaft d_1	Bore D	Nominal seal width b		
in.			–	–
8.500	9.750	0.625	CRWH1 R	**85002**
	10.000	0.625	CRWH1 R	**85009**[1]
	10.500	0.625	CRWH1 R	**85015**[1]
	10.625	0.625	CRWHA1 R	**85085**[1]
8.625	10.625	0.625	CRWH1 R	**86260**[1]
8.750	10.750	0.625	CRWH1 R	**87541**[1]
8.875	10.125	0.625	CRWH1 R	**88710**[1]
	10.875	0.625	CRWH1 R	**88760**[1]
9.000	10.000	0.625	CRWH1 R	**90006**[1]
	11.000	0.625	CRWH1 R	**90036**[1]
9.250	11.250	0.625	CRWHA1 R	**92536**
	12.750	0.625	CRWHA1 R	**92570**[1]
	12.750	1.250	CRWHA1 R	**92574**[1]
9.500	10.500	0.438	CRW1 R	**95048**
	11.500	0.625	CRW1 R	**95062**
9.625	11.625	0.625	CRWH1 R	**96245**[1]
	11.125	0.625	CRWH1 R	**97542**[1]
	11.250	0.625	CRWH1 R	**97545**[1]
	11.750	0.625	CRWH1 R	**97550**[1]
10.000	11.252	0.625	CRWHA1 R	**100044**[1]
	12.000	0.625	CRWH1 R	**100051**[1]
	12.000	0.625	CRWA1 R	**100075**
10.250	11.250	0.563	CRWH1 R	**102520**[1]
	12.250	0.625	CRWH1 R	**102540**[1]
10.500	11.750	0.625	CRWH1 R	**105010**[1]
	12.500	0.625	CRWH1 R	**105051**[1]
10.750	12.750	0.625	CRWH1 R	**107551**[1]
11.000	12.250	0.625	CRWHA1 R	**110030**[1]
	13.000	0.625	CRWH1 R	**110051**[1]
11.375	13.000	0.625	CRW1 R	**113740**[1]
11.500	13.000	0.625	CRWH1 R	**115021**[1]
	13.500	0.625	CRWH1 R	**115041**[1]
12.000	14.000	0.625	CRW1 R	**120060**[1]
12.250	13.375	0.625	CRWH1 R	**122555**[1]
	13.813	0.625	CRW1 R	**122580**[1]
	14.250	1.000	CRWHA1 R	**122590**[1]

[1] Without SKF Bore Tite Coating

CRW5 and CRWA5 seals

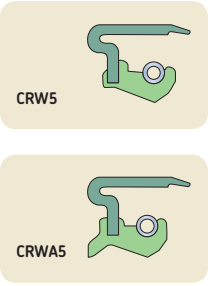

CRW5 and CRWA5 seals are designed to withstand moderate pressure differentials. They have an SKF Wave lip to reduce heat generation and a metal outside diameter for easy installation and a firm and accurate fit in the housing bore. See **pages 57** and **58** for more information on SKF Wave lip design. Most of them have SKF Bore Tite Coating on the outside diameter. The CRWA5 seals have an auxiliary lip, providing additional contaminant exclusion ability. A shoulder or retaining ring should be used at the low-pressure side of the seal to prevent it from being pressed out of the housing bore.

CRW5: Seal with one steel case, SKF Wave lip and a carbon steel garter spring.

CRWA5: Seal with one steel case, SKF Wave lip, a carbon steel garter spring and an auxiliary, contacting lip.

The CRW5 and CRWA5 seals are available in inch sizes with sealing lips made of either nitrile rubber or the SKF fluoro rubber compound SKF Duralife. Other materials are also available on request.

See **matrix 1** on **pages 90** and **91** for permissible operating conditions.

Radial shaft seals – CRW5 and CRWA5 – inch dimensions
d_1 **0.313 – 0.875** in.

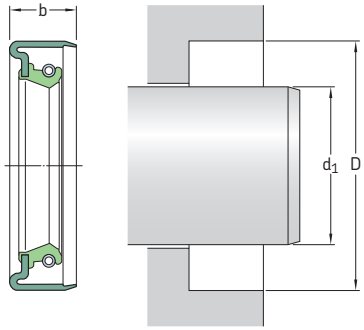

Please see **pages 74** to **76** for housing bore requirements.

Dimensions Shaft d_1	Bore D	Nominal seal width b	**Design and lip material**	**Designation**
in.			–	–
0.313	0.686	0.313	CRWA5 R	**3094**[1]
	0.749	0.250	CRWA5 R	**3101**[1]
	0.749	0.250	CRWA5 V	**3103**[1]
	0.999	0.313	CRWA5 R	**3171**[1]
0.375	0.749	0.250	CRW5 R	**3689**[1]
	1.124	0.375	CRW5 V	**3807**
0.500	0.875	0.313	CRWA5 R	**4940**
	0.875	0.313	CRWA5 V	**4941**
	0.999	0.250	CRWA5 V	**4991**
	0.999	0.313	CRWA5 R	**4996**
	1.124	0.250	CRWA5 R	**5069**
	1.124	0.250	CRWA5 V	**5072**
0.625	0.999	0.250	CRWA5 R	**6151**
	1.124	0.250	CRW5 R	**6191**
	1.124	0.374	CRWA5 V	**6231**
	1.124	0.375	CRWA5 R	**6229**
	1.126	0.250	CRW5 R	**6242**
	1.250	0.313	CRWA5 R	**6280**[1]
	1.250	0.313	CRWA5 V	**6285**[1]
	1.375	0.250	CRW5 P	**6371**
	1.375	0.375	CRWA5 R	**6388**
	1.500	0.313	CRW5 V	**6393**
0.750	1.250	0.250	CRWA5 R	**7434**
	1.250	0.375	CRWA5 R	**7449**
	1.375	0.250	CRWA5 V	**7509**
0.875	1.250	0.250	CRWA5 V	**8634**
	1.375	0.250	CRWA5 R	**8660**
	1.375	0.250	CRWA5 V	**8665**
	1.497	0.313	CRWA5 V	**8694**

[1] Without SKF Bore Tite Coating

Radial shaft seals – CRW5 and CRWA5 – inch dimensions
d_1 **0.984 – 2.500** in.

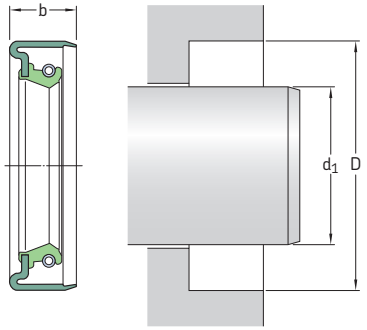

Please see **pages 74** to **76** for housing bore requirements.

Dimensions Shaft d_1	Bore D	Nominal seal width b	**Design and lip material**	**Designation**
in.			–	–
0.984	1.596	0.250	CRWA5 R	**9700**
	1.752	0.313	CRWA5 V	**9805**
1.000	1.375	0.250	CRWA5 R	**9814**
	1.499	0.250	CRWA5 R	**9843**
	1.499	0.250	CRW5 R	**9855**[1]
	1.499	0.250	CRWA5 V	**9858**
	1.500	0.250	CRWA5 R	**9863**
	1.752	0.313	CRWA5 R	**9967**
	2.000	0.313	CRWA5 R	**10131**
1.125	1.626	0.250	CRWA5 V	**11139**
1.250	1.687	0.313	CRWA5 R	**12333**
	1.750	0.250	CRWA5 V	**12339**
	1.750	0.250	CRWA5 R	**12360**
	1.997	0.438	CRWA5 V	**12438**
	2.328	0.500	CRWA5 R	**12609**
	2.502	0.500	CRWA5 R	**12640**
1.500	1.997	0.250	CRWA5 V	**14844**
	2.064	0.375	CRWA5 V	**14868**
	2.311	0.500	CRWA5 V	**14979**
	2.328	0.500	CRWA5 R	**14977**
1.750	2.502	0.500	CRWA5 R	**17374**
1.938	2.675	0.250	CRWA5 R	**19213**
	2.835	0.250	CRWA5 R	**19278**
2.500	3.251	0.350	CRWA5 R	**24892**

[1] Without SKF Bore Tite Coating

HDW1 seals



HDW1 seals are heavy-duty SKF Wave lip seals, designed for use in grease or oil lubricated applications. The seals are produced standard with a heavy-duty seal body, SKF Bore Tite Coating on the metal outside diameter, SKF Wave lip in nitrile rubber, and a carbon steel garter spring.

The rigid seal body can withstand operating pressures up to 0,24 MPa *(35 psi)*, dynamic, and 0,34 MPa *(50 psi)*, static, while withstanding shaft speeds up to 25 m/s *(4 900 ft/min)* at shaft diameters < 203 mm *(8 in.)*.

The HDW1 seals are available in inch sizes.

Radial shaft seals – HDW1 – inch dimensions
d_1 **5.000 – 7.938** in.

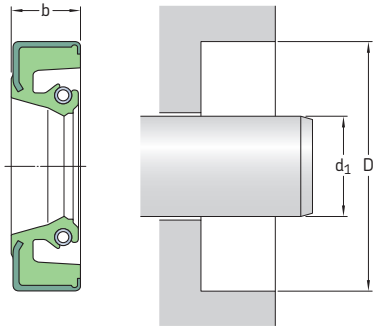

Please see **pages 74** to **76** for housing bore requirements.

Dimensions			Design and lip material	Designation
Shaft	Bore	Nominal seal width		
d_1	D	b		
in.			–	–
5.000	6.125	0.500	HDW1 R	**49951**
	7.125	0.500	HDW1 R	**50186**
5.063	6.125	0.500	HDW1 R	**50620**
5.125	6.625	0.500	HDW1 R	**51277**
	7.000	0.500	HDW1 R	**51330**
5.188	6.250	0.500	HDW1 R	**51800**
5.250	6.750	0.500	HDW1 R	**52651**
	7.125	0.500	HDW1 R	**52655**
5.313	6.375	0.500	HDW1 R	**53100**
5.438	6.625	0.500	HDW1 R	**54300**
5.875	6.875	0.500	HDW1 R	**58709**[1]
	7.000	0.500	HDW1 R	**58710**
5.938	7.000	0.500	HDW1 R	**59300**
6,000	7.250	0.500	HDW1 R	**60009**
6.063	7.500	0.500	HDW1 R	**60650**
6.125	7.125	0.500	HDW1 R	**61215**
	7.250	0.500	HDW1 R	**61230**
	7.375	0.500	HDW1 R	**61235**
6.250	7.250	0.500	HDW1 R	**62480**
6.375	7.500	0.500	HDW1 R	**63717**
6.438	7.500	0.500	HDW1 R	**64330**

Dimensions			Design and lip material	Designation
Shaft	Bore	Nominal seal width		
d_1	D	b		
in.			–	–
6.625	7.625	0.500	HDW1 R	**66217**
	7.750	0.500	HDW1 R	**66219**
	7.875	0.500	HDW1 R	**66222**
	8.000	0.500	HDW1 R	**66230**
6.750	7.750	0.500	HDW1 R	**67510**
	8.750	0.500	HDW1 R	**67600**
6.875	8.250	0.500	HDW1 R	**68730**
	8.500	0.500	HDW1 R	**68760**
7.125	8.250	0.500	HDW1 R	**71220**
7.375	8.375	0.500	HDW1 R	**73720**
	8.500	0.500	HDW1 R	**73730**
7.500	8.750	0.500	HDW1 R	**75046**
	9.250	0.500	HDW1 R	**75069**
7.625	8.875	0.500	HDW1 R	**76225**
7.750	8.750	0.500	HDW1 R	**77506**
7.875	8.875	0.500	HDW1 R	**78710**
7.938	9.125	0.500	HDW1 R	**79620**

[1] Stainless steel garter spring

CRS1, CRSH1, CRSA1 and CRSHA1 seals

All CRS seals are designed with a metal case and a conventional spring-loaded sealing lip. Some of them have a sealant on the outside diameter to compensate for imperfections in the housing bore.

CRS1: Seal with a single steel case, a conventional sealing lip and a carbon steel garter spring.

CRSA1: Seal with a single steel case, a conventional sealing lip, a carbon steel garter spring and an auxiliary, contacting lip.

CRSH1: Seal with a double steel case, a conventional sealing lip and a carbon steel garter spring.

CRSHA1: Seal with a double steel case, a conventional sealing lip, a carbon steel garter spring and an auxiliary, contacting lip.

CRS seals are available with sealing lips made of nitrile rubber for general-purpose applications and of fluoro rubber, providing improved high temperature and chemical resistance.

See **matrix 1** on **pages 90** and **91** for permissible operating conditions.

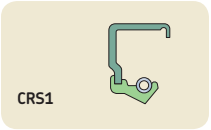







Radial shaft seals – CRS1, CRSH1, CRSA1 and CRSHA1 – metric dimensions
d_1 **12 – 37** mm

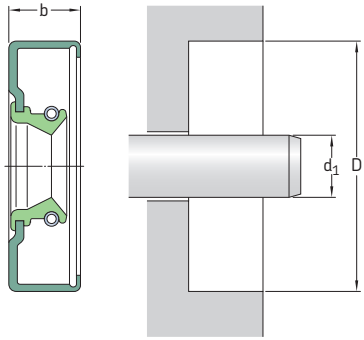

Please see **pages 74** to **76** for housing bore requirements.

Dimensions Shaft d_1	Bore D	Nominal seal width b	**Design and lip material**	**Designation**
mm.			–	–
12	20	5	CRSA1 R	**12×20×5 CRSA1 R**
13	28	7	CRS1 R	**13×28×7 CRS1 R**
19	37	10	CRS1 V	**19×37×10 CRS1 V**
20	30	5	CRS1 R	**20×30×5 CRS1 R**
	30	7	CRS1 V	**20×30×7 CRS1 V**
	32	7	CRS1 V	**20×32×7 CRS1 V**
	42	7	CRS1 V	**20×42×7 CRS1 V**
22	32	7	CRS1 V	**22×32×7 CRS1 V**
24	38	10	CRS1 R	**24×38×10 CRS1 R**
25	32	7	CRSA1 R	**25×32×7 CRSA1 R**
	47	10	CRSA1 V	**25×47×10 CRSA1 V**
	52	7	CRS1 R	**25×52×7 CRS1 R**
26	35	7	CRS1 R	**26×35×7 CRS1 R**
	42	8	CRS1 R	**26×42×8 CRS1 R**
27	37	7	CRS1 V	**27×37×7 CRS1 V**
	41	10	CRSH1 R	**27×41×10 CRSH1 R**
28	62	12	CRSH1 R	**28×62×12 CRSH1 R**
30	45	8	CRS1 V	**30×45×8 CRS1 V**
	52	9	CRSH1 R	**30×52×9 CRSH1 R**
32	46	8	CRS1 R	**32×46×8 CRS1 R**
34	52	10	CRS1 R	**34×52×10 CRS1 R**
	54	11	CRS1 R	**34×54×11 CRS1 R**
35	64	8	CRSA1 P	**35×64×8 CRSA1 P**
	65	12	CRSA1 R	**35×65×12 CRSA1 R**
36	46	9	CRS1 R	**36×46×9 CRS1 R**
	56	10	CRS1 R	**36×56×10 CRS1 R**
37	55	10	CRSH1 R	**37×55×10 CRSH1 R**

Radial shaft seals – CRS1, CRSH1, CRSA1 and CRSHA1 – metric dimensions
d_1 **40 – 260** mm

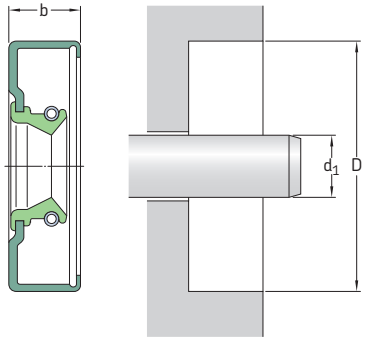

Please see **pages 74** to **76** for housing bore requirements.

Dimensions Shaft d_1	Bore D	Nominal seal width b	**Design and lip material**	**Designation**
mm			–	–
40	55	10	CRS1 R	**40×55×10 CRS1 R**
	60	10	CRSA1 R	**40×60×10 CRSA1 R**
42	62	10	CRS1 R	**42×62×10 CRS1 R**
43	62	10	CRSH1 R	**43×62×10 CRSH1 R**
45	58	9	CRSA1 R	**45×58×9 CRSA1 R**
	62	7	CRSA1 R	**45×62×7 CRSA1 R**
48	70	9	CRSA1 R	**48×70×9 CRSA1 R**
50	62	7	CRS1 R	**50×62×7 CRS1 R**
	62	10	CRS1 R	**50×62×10 CRS1 R**
	85	13	CRSH1 R	**50×85×13 CRSH1 R**
54	72	10	CRSA1 R	**54×72×10 CRSA1 R**
	80	10	CRSH1 R	**54×80×10 CRSH1 R**
57	72	10	CRSH1 R	**57×72×10 CRSH1 R**
58	85	13	CRSH1 R	**58×85×13 CRSH1 R**
59	75	10	CRSA1 R	**59×75×10 CRSA1 R**
60	70	7	CRS1 R	**60×70×7 CRS1 R**
	78	9	CRS1 R	**60×78×9 CRS1 R**[1)]
	80	10	CRSHA1 R	**60×80×10 CRSHA1 R**
	90	10	CRSH1 R	**60×90×10 CRSH1 R**
62	75	10	CRS1 R	**62×75×10 CRS1 R**
66	80	8,9	CRSHA1 R	**66×80×9 CRSHA1 R**
	85	10	CRSHA1 R	**66×85×10 CRSHA1 R**
	90	13	CRSH1 R	**66×90×13 CRSH1 R**
68	85	10	CRS1 R	**68×85×10 CRS1 R**
74	100	13	CRSH1 R	**74×100×13 CRSH1 R**

[1)] Sealant on outside diameter

Dimensions Shaft d_1	Bore D	Nominal seal width b	Design and lip material	Designation
mm			–	–
75	115	13	CRSH1 R	**75×115×13 CRSH1 R**
80	100	13	CRSA1 R	**80×100×13 CRSA1 R**
	125	13	CRSH1 R	**80×125×13 CRSH1 R**
85	100	9	CRS1 R	**85×100×9 CRS1 R**
88	110	13	CRSH1 R	**88×110×13 CRSH1 R**
90	125	13	CRSH1 R	**90×125×13 CRSH1 R**
95	110	9	CRS1 R	**95×110×9 CRS1 R**
100	120	13	CRSH1 R	**100×120×13 CRSH1 R**
105	125	12	CRS1 R	**105×125×12 CRS1 R**
107	123	11	CRSA1 R	**107×123×11 CRSA1 R**
108	130	13	CRSH1 R	**108×130×13 CRSH1 R**
113	140	13	CRSH1 R	**113×140×13 CRSH1 R**
115	160	15	CRSH1 R	**115×160×15 CRSH1 R**
120	150	15	CRSH1 R	**120×150×15 CRSH1 R**
125	146	14	CRSA1 P	**125×146×14 CRSA1 P**
126	147	11	CRSA1 R	**126×147×11 CRSA1 R**
130	150	10	CRSA1 R	**130×150×10 CRSA1 R**
	150	14	CRSA1 R	**130×150×14 CRSA1 R**
	155	10	CRSH1 R	**130×155×10 CRSH1 R**
	160	13	CRS1 R	**130×160×13 CRS1 R**
	160	13	CRSA1 R	**130×160×13 CRSA1 R**
	165	13	CRSH1 R	**130×165×13 CRSH1 R**
135	160	13	CRSH1 R	**135×160×13 CRSH1 R**
	170	15	CRSH1 R	**135×170×15 CRSH1 R**
138	152	12	CRSA1 R	**138×152×12 CRSA1 R**
145	164	14	CRSA1 R	**145×164×14 CRSA1 R**
	175	14	CRS1 R	**145×175×14 CRS1 R**
150	170	15	CRSH1 R	**150×170×15 CRSH1 R**
	180	13	CRSH1 R	**150×180×13 CRSH1 R**
	200	15	CRSH1 R	**150×200×15 CRSH1 R**
154	175	13	CRSA1 R	**154×175×13 CRSA1 R**
160	185	13	CRSA1 V	**160×185×13 CRSA1 V**
168	200	15	CRSH1 R	**168×200×15 CRSH1 R**
170	190	15	CRSH1 R	**170×190×15 CRSH1 R**
180	200	12	CRS1 R	**180×200×12 CRS1 R**
	215	16	CRS1 R	**180×215×16 CRS1 R**
	220	16	CRSA1 R	**180×220×16 CRSA1 R**
190	215	16	CRSH1 R	**190×215×16 CRSH1 R**
195	230	15	CRSH1 R	**195×230×15 CRSH1 R**
200	250	15	CRSH1 R	**200×250×15 CRSH1 R**
260	300	20	CRS1 R	**260×300×20 CRS1 R**

Radial shaft seals – CRS1, CRSH1, CRSA1 and CRSHA1 – inch dimensions
d_1 **0.531 – 2.008** in.

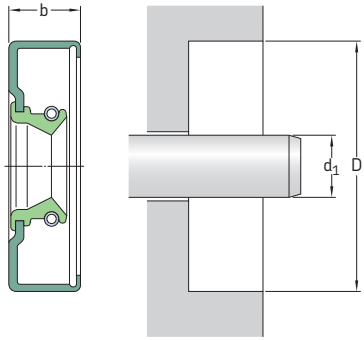

Please see **pages 74** to **76** for housing bore requirements.

Dimensions Shaft d_1	Bore D	Nominal seal width b	**Design and lip material**	**Designation**
in.			–	–
0.531	1.124	0.313	CRSA1 R	**5334**
0.594	1.250	0.313	CRSA1 R	**5950**
	1.375	0.313	CRSA1 R	**5966**[1)]
0.669	1.339	0.311	CRSA1 P	**6992**
0.709	1.339	0.315	CRSA1 P	**7089**
0.781	1.752	0.313	CRSHA1 R	**8213**
0.844	1.828	0.313	CRSA1 R	**8485**
0.945	1.575	0.315	CRS1 R	**9515**
0.969	2.048	0.375	CRS1 R	**9688**[1)]
1.125	2.835	0.375	CRSA1 R	**11405**[1)]
	2.875	0.469	CRSH1 R	**11410**[1)]
1.156	2.125	0.438	CRSH1 R	**11566**[1)]
1.219	2.000	0.438	CRSH1 R	**12131**[1)]
1.250	2.561	0.500	CRSH1 R	**12655**
	2.713	0.469	CRSH1 R	**12660**[1)]
	3.156	0.500	CRSH1 R	**12678**
1.301	2.000	0.438	CRSA1 P	**12905**
1.313	1.874	0.375	CRSA1 R	**13027**[1)]
	2.000	0.313	CRSA1 R	**13037**[1)]
	2.106	0.375	CRSA1 R	**13084**[1)]
	2.996	0.500	CRSH1 R	**13275**[1)]
1.328	2.312	0.433	CRS1 R	**13419**[1)]
1.362	2.191	0.250	CRS1 P	**13500**

[1)] Sealant on outside diameter

Dimensions			Design and lip material	Designation
Shaft	Bore	Nominal seal width		
d_1	D	b		
in.			–	–
1.375	2.750	0.500	CRSH1 R	**13906**[1]
	3.000	0.500	CRSHA1 R	**13937**
	3.125	0.500	CRSH1 R	**13936**
	3.350	0.469	CRSH1 R	**13934**[1]
1.399	2.292	0.469	CRSA1 R	**13992**[1]
	2.292	0.500	CRSA1 R	**13990**[1]
1.414	2.250	0.250	CRSHA1 R	**14035**[1]
1.469	2.374	0.375	CRSA1 R	**14641**[1]
1.491	2.191	0.250	CRSA1 R	**14780**
1.500	2.996	0.500	CRSH1 R	**15240**
	3.000	0.375	CRSA1 R	**15241**
1.524	2.374	0.500	CRSH1 R	**15343**
1.563	2.716	0.469	CRSH1 R	**15748**[1]
1.618	2.575	0.500	CRSA1 R	**16404**[1]
1.625	2.437	0.469	CRSHA1 R	**16121**
	2.835	0.469	CRSH1 R	**16386**
	3.062	0.500	CRSH1 R	**16431**[1]
	3.251	0.500	CRSH1 R	**16440**[1]
1.656	2.502	0.500	CRSH1 R	**16532**[1]
1.688	2.374	0.313	CRSA1 R	**16669**
	2.835	0.469	CRSA1 R	**16960**
1.705	3.084	0.500	CRS1 R	**17053**
1.719	2.623	0.500	CRSH1 R	**17136**[1]
1.750	2.328	0.438	CRS1 R	**17257**
	3.154	0.313	CRS1 R	**17726**
	3.937	0.313	CRSA1 R	**17771**[1]
1.781	2.750	0.500	CRSH1 R	**17847**
	2.758	0.500	CRSH1 R	**17851**[1]
1.844	2.502	0.375	CRSA1 R	**18412**[1]
	2.750	0.375	CRSA1 R	**18446**[1]
1.875	3.125	0.313	CRSA1 R	**18879**[1]
1.889	3.110	0.688	CRSA1 P	**18983**
1.890	2.874	0.276	CRSA1 P	**18979**
1.906	3.189	0.313	CRSA1 P	**19062**
1.938	2.762	0.500	CRSA1 R	**19273**[1]
	2.825	0.500	CRSH1 P	**19274**
	3.751	0.500	CRSH1 R	**19466**[1]
1.969	2.638	0.354	CRSA1 R	**19628**
	2.686	0.500	CRSH1 R	**19615**
	2.742	0.500	CRSH1 P	**19620**
	2.875	0.469	CRSH1 R	**19643**
2.008	2.953	0.354	CRSA1 P	**20012**

[1] Sealant on outside diameter

Radial shaft seals – CRS1, CRSH1, CRSA1 and CRSHA1 – inch dimensions
d_1 **2.063 – 7.000** in.

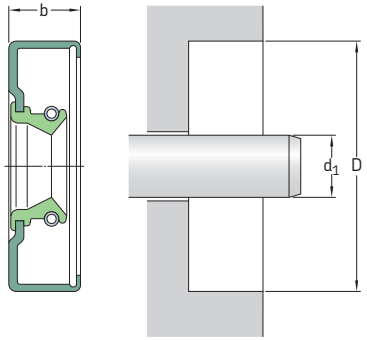

Please see **pages 74** to **76** for housing bore requirements.

Dimensions Shaft d_1	Bore D	Nominal seal width b	**Design and lip material**	**Designation**
in.			–	–
2.063	2.875	0.375	CRSA1 R	**550085**[1]
2.125	3.623	0.469	CRSA1 P	**21379**
2.145	3.188	0.469	CRSH1 R	**21538**
2.188	3.623	0.500	CRSHA1 R	**21950**
2.432	3.070	0.227	CRSA1 P	**24110**
2.563	3.500	0.500	CRSHA1 P	**25587**
2.648	3.812	0.500	CRS1 R	**26877**
2.750	4.125 4.125	0.438 0.563	CRS1 P CRSA1 R	**27576**[1] **27577**
2.875	3.434	0.294	CRSA1 R	**28646**[1]
2.913	3.543	0.394	CRS1 P	**29105**
3.125	3.936	0.512	CRSA1 V	**31144**[1]
3.250	3.876 4.125	0.375 0.563	CRSA1 V CRSH1 R	**32332**[1] **32362**[1]
3.298	4.125	0.563	CRSA1 R	**32815**[1]
3.469	4.626	0.625	CRSA1 R	**34700**
3.500	5.751	0.563	CRSH1 R	**35111**[1]
3.504	4.173	0.354	CRSA1 V	**35120**
3.813	4.999 5.251	0.469 0.469	CRSH1 R CRSH1 R	**38160** **38220**[1]
3.875	5.501 5.751	0.500 0.563	CRSHA1 R CRSH1 R	**38749**[1] **38810**

[1] Sealant on outside diameter

Dimensions			Design and lip material	Designation
Shaft	Bore	Nominal seal width		
d_1	D	b		
in.			–	–
3.898	4.680	0.370	CRSA1 VR	**38770**
4.188	4.999	0.469	CRSHA1 R	**41751**
	5.251	0.469	CRSH1 R	**41761**
	5.751	0.500	CRSHA1 R	**41833**
4.313	5.751	0.500	CRSH1 R	**43231**
4.563	5.751	0.500	CRSHA1 R	**45550**
	6.250	0.500	CRSH1 R	**45560**
5.000	7.000	0.500	CRSHA1 R	**50185**
	7.500	0.500	CRSHA1 R	**50195**
5.125	6.500	0.500	CRSHA1 R	**51276**
5.313	6.500	0.500	CRSHA1 R	**53151**
5.375	6.374	0.500	CRSHA1 R	**53688**[1]
	6.499	0.563	CRSH1 R	**53692**
5.500	6.626	0.563	CRSHA1 R	**54949**
	6.876	0.563	CRSHA1 R	**55157**
	7.501	0.563	CRSH1 R	**55179**
5.750	6.876	0.563	CRSHA1 R	**57519**
	7.126	0.563	CRSHA1 R	**57578**
	7.502	0.563	CRSHA1 R	**57584**
6.000	7.002	0.500	CRSHA1 R	**60006**[1]
6.062	6.772	0.551	CRSA1 R	**60620**
6.125	7.502	0.563	CRSHA1 R	**61248**[1]
6.188	7.500	0.563	CRSH1 P	**61740**
7.000	8.375	0.625	CRSHA1 R	**70034**

[1] Sealant on outside diameter

PTFE radial shaft seals

Radial shaft seals with one or more PTFE sealing lip(s) are designed to withstand aggressive environments, high temperatures, high pressures and dry running that traditional radial shaft seals made of elastomeric sealing lip materials cannot withstand. Many of the PTFE compounds are FDA approved. Main advantages of PTFE seals include:

- High chemical resistance
- Withstand speeds up to 30 m/s *(5 900 ft/min)*
- Wide operating temperature range, –70 to +250 °C *(–95 to +480 °F)*
- Withstand pressures up to 3,5 MPa *(500 psi)*
- Withstand dry running

Assortment

The profiles shown below are a selection of the most commonly used SKF seal designs with sealing lips made of PTFE. They can be installed in existing housing grooves where traditional radial seals are used, provided that the grooves are manufactured in accordance with international standards.

There are two main executions of PTFE seals: those with a metal case and those without a metal case. The metal case can be made of steel, aluminium or any of the stainless steel materials SS 304, SS 316 and SS 316 TI. The PTFE material should be selected based on the needs of the application.

PTFE seals without a metal case can be designed with an O-ring in the outside diameter groove to provide static sealing ability. Both the PTFE and O-ring material can be selected to meet the demands of different operating conditions, e.g. in the food industry to enable disassembly of the equipment for cleaning.

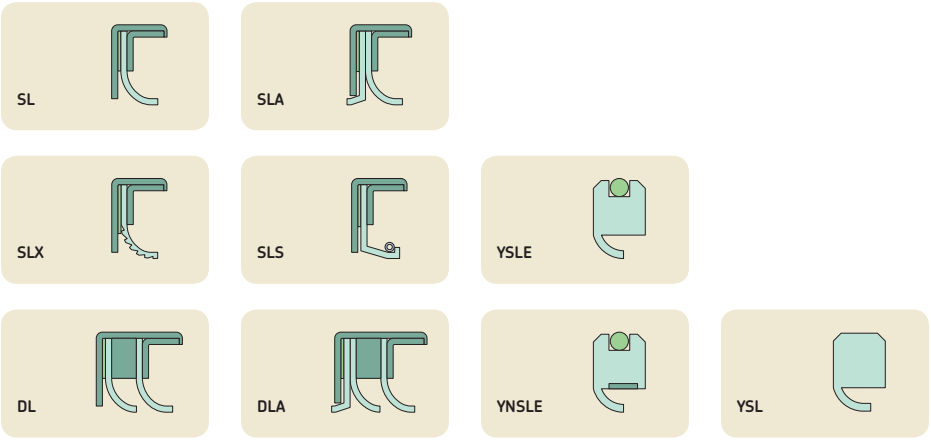

PTFE materials

The selection of seal materials typically requires a compromise between advantages and disadvantages. There are hundreds of different PTFE materials with a variety of fillers. Common fillers include glass fibre, carbon, graphite, molybdenum disulphide, metal oxides and various polymers. Each possesses different properties, appropriate for different applications and service conditions. Common to all filled PTFE materials are their improved resistance to wear and deformation.

Unfilled PTFE provides, in most cases, a lower coefficient of friction than a filled PTFE material and the lowest degree of wear of the seal counterface. However, a sealing lip made of an unfilled PTFE material has limited resistance to wear and deformation under load.

The PTFE materials that SKF most often recommends are listed in **table 14** on **page 176**. In addition to PTFE-based compounds, SKF also offers radial shaft seals in other modified plastics, some of which are listed in **table 15** on **page 177**.

Selecting the appropriate material for the metal case and the O-ring(s) is also of significant importance to achieving satisfactory sealing performance. Contact SKF for more information.

Installation

Special care must be taken during handling and installation of PTFE seals. For more information, refer to **pages 85** and **86**.

Size range and availability

The majority of PTFE radial shaft seals from SKF are made to order to meet the demands of each application. There are, however, certain standard sizes within the ranges of approximately 6 to 200 mm *(0.250 to 8 in.)* shaft diameter and approximately 16 to 230 mm *(0.630 to 9 in.)* bore diameter. Contact SKF for more information regarding designs and sizes.

Table 14

Material family	Description	Shaft hardness recommended[1]
PTFE, unfilled	"Virgin" PTFE. FDA approved. Low-friction material. Used for general non-pressure applications on shafts with low hardness value. Excellent for cryogenics.	A
PTFE + glass	FDA approved. Glass can be in the form of beads or fibres. Glass is exceptionally strong and prolongs the life of the base PTFE. Due to its inherent hardness, it also adds an abrasive property and is not recommended on low-hardness shafts.	C
PTFE + MoS_2	Molybdenum disulphide (MoS_2) adds wear resistance to the base PTFE. Not as abrasive as glass.	C
PTFE + glass + MoS_2	Improved elongation characteristics and less abrasive to running surfaces compared to PTFE + glass.	C
PTFE + carbon	Carbon can be in the form of various grades of fibres or graphite powder, either natural or synthetic. Carbon is an excellent natural lubricant and provides wear resistance to enhance the low-friction base PTFE material. Increased percentage of carbon will increase the wear, creep, and extrusion resistance and improve performance in steam and chemical service at elevated temperatures and pressures.	A, B, C
PTFE + carbon + MoS_2	Excellent wear rate in non-lubricated services at high temperatures.	B, C
PTFE + bronze	Suitable for high-speed dynamic sealing of hydraulic media. Should not be used in chemical service, which could attack the bronze.	
PTFE + bronze + MoS_2	High degree of wear and extrusion resistance in high-pressure applications.	
PTFE + polymer	Polymers, such as polyoxybenzoate, polyimide and many others improve creep and wear resistance.	A, B, C
PTFE + organic pigment	FDA and/or USDA 3A approved.	

[1] Material selection recommendations for counterface hardness ratings (Rockwell C scale) combined with surface speed. For material selection, please see **table 16**

Table 15

Modified plastic materials

UHMWPE	Ultra-high molecular weight polyethylene. Significantly improved wear and abrasion resistance over PTFE-based materials in non-lubricated or abrasive media. FDA and USDA 3A approved. Fair media compatibility, limited to approximately 90 °C *(195 °F)*.
Nylon	Improved strength, limited media compatibility and temperature resistance. Hydroscopic. Used for plain bearings, bushings, back-up rings and some seals.
POM	Polyoxymethylene (a.k.a. polyacetal or just acetal). Similar to nylon but with significantly reduced water-absorption properties. Some grades are FDA and USDA 3A compliant. Typically used for plain bearings, bushings, and back-up rings.
Ertalyte	Similar to POM but offers improved media compatibility and improved wear resistance.
PEEK	Polyetheretherketone. Similar strength properties as nylon and POM but with very good media compatibility and significantly better temperature properties. Some grades are FDA and USDA 3A compliant. Used for plain bearings, bushings, back-up rings and some seals.
PPS	Polyphenylene sulphide. Similar strength properties and chemical compatibility as PEEK-based compounds but offers improved wear resistance. Has better temperature capabilities than nylon or POM materials but not as good as PEEK. Adding fillers can create a "bearing-grade" PPS for high-performance applications.
PA	Polyamide. Exceptional mechanical, thermal and chemical resistance properties.

Table 16

Material selection with shaft hardness + velocity

Surface speed	< 30 HRC	45 HRC	≥ 58 HRC
Low	A or B	A, B, C	A, B, C
Medium	A	A, B	A, B, C
High	A	A, B	A, B

HM and TL seals for grease lubricated applications

SKF offers an extensive assortment of radial shaft seals for less demanding grease lubricated applications operating at moderate speeds. The majority of these seals are designed without a spring. The seals are generally installed with the sealing lip facing outward to provide maximum exclusion ability. Typical applications are grease lubricated agriculture machinery. The illustrations below show the most commonly used designs within this assortment from SKF. Contact SKF for more information on available designs.

See **matrix 1** on **pages 90** and **91** for permissible operating conditions, valid for both HM and TL seals.

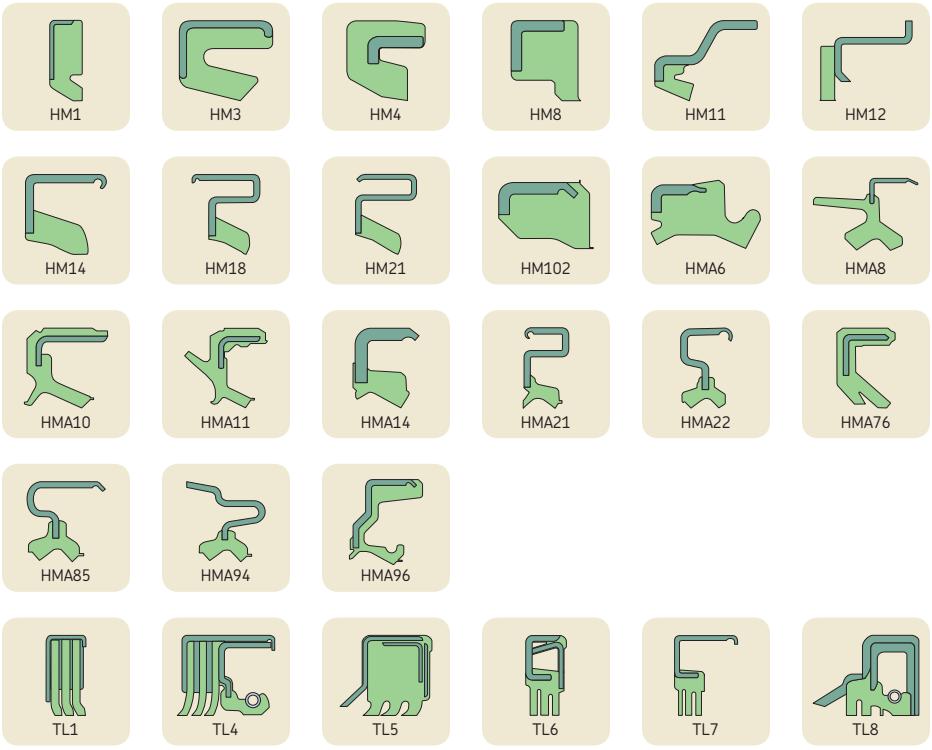

Radial shaft seals – HM and TL seals – metric dimensions
d_1 **6 – 22** mm

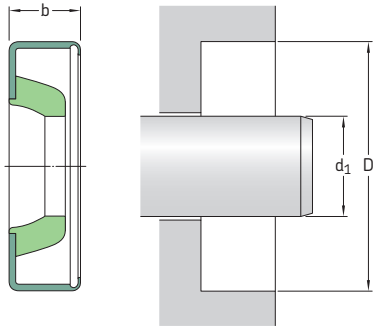

Please see **pages 74** to **76** for housing bore requirements.

Dimensions Shaft d_1	Bore D	Nominal seal width b	**Design and lip material**	**Designation**
mm			–	–
6	12	2	HM3 R	**6×12×2 HM3 R**
8	12	3	HM4 R	**8×12×3 HM4 R**
9	13	3	HM4 R	**9×13×3 HM4 R**
10	14	3	HM4 R	**10×14×3 HM4 R**
	16	4	HM102 R	**10×16×4 HM102 R**
12	16	3	HM4 R	**12×16×3 HM4 R**
	18	3	HM4 R	**12×18×3 HM4 R**
	19	3	HM4 R	**12×19×3 HM4 R**
	22	4	HM4 R	**12×22×4 HM4 R**
14	20	3	HM4 R	**14×20×3 HM4 R**
	22	3	HM4 R	**14×22×3 HM4 R**
15	21	3	HM4 R	**15×21×3 HM4 R**
	23	3	HM4 R	**15×23×3 HM4 R**
	25	5	HMA10 R	**15×25×5 HMA10 R**
16	22	3	HM4 R	**16×22×3 HM4 R**
	22	4	HM4 R	**16×22×4 HM4 R**
	24	4	HM102 R	**16×24×4 HM102 R**
17	23	3	HM4 R	**17×23×3 HM4 R**
18	24	3	HM4 R	**18×24×3 HM4 R**
	26	4	HMA1 R	**18×26×4 HMA1 R**
19	27	4	HM4 R	**19×27×4 HM4 R**
20	26	4	HM4 R	**20×26×4 HM4 R**
	28	4	HM4 R	**20×28×4 HM4 R**
22	28	4	HM1 R	**22×28×4 HM1 R**
	28	4	HMA10 R	**22×28×4 HM10 R**
	30	4	HM4 R	**22×30×4 HM4 R**
	35	5	HM14 R	**22×35×5 HM14 R**

Radial shaft seals – HM and TL seals – metric dimensions
d_1 **23 – 65** mm

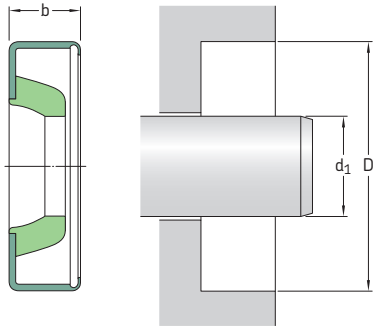

Please see **pages 74** to **76** for housing bore requirements.

Dimensions Shaft d_1	Bore D	Nominal seal width b	**Design and lip material**	**Designation**
mm			–	–
23	32	5,50	HM1 R	**23×32×6 HM1 R**
	35	6	HMA10 R	**23×35×6 HMA10 R**
24	32	4	HM4 R	**24×32×4 HM4 R**
25	32	4	HM4 R	**25×32×4 HM4 R**
	33	4	HM4 R	**25×33×4 HM4 R**
	35	4	HM4 R	**25×35×4 HM4 R**
26	34	4	HM4 R	**26×34×4 HM4 R**
28	35	4	HM4 R	**28×35×4 HM4 R**
	35	6	HM102 R	**28×35×6 HM102 R**
	37	4	HM4 R	**28×37×4 HM4 R**
30	37	4	HM4 R	**30×37×4 HM4 R**
	40	4	HM4 R	**30×40×4 HM4 R**
32	42	4	HM4 R	**32×42×4 HM4 R**
35	42	4	HM4 R	**35×42×4 HM4 R**
	45	4	HM4 R	**35×45×4 HM4 R**
	47	5	HM4 R	**35×47×5 HM4 R**
37	47	4	HM4 R	**37×47×4 HM4 R**
38	48	4	HM4 R	**38×48×4 HM4 R**
40	47	4	HM4 R	**40×47×4 HM4 R**
	50	4	HM4 R	**40×50×4 HM4 R**
	52	5	HM4 R	**40×52×5 HM4 R**
	53	5	HMA76 R	**40×53×5 HMA76 R**
	62	10	HMA10 R	**40×62×10 HMA10 R**
42	52	4	HM4 R	**42×52×4 HM4 R**
	55	6	HM1 R	**42×55×6 HM1 R**
	64	6	HMA1 R	**42×64×6 HMA1 R**

Dimensions			Design and lip material	Designation
Shaft	Bore	Nominal seal width		
d_1	D	b		
mm			–	–
45	52	4	HM4 R	**45×52×4 HM4 R**
	55	4	HM4 R	**45×55×4 HM4 R**
	72	8	HMA22 R	**45×72×8 HMA22 R**
47	72	6	HMA85 R	**47×72×6 HMA85 R**
48	58	4	HM4 R	**48×58×4 HM4 R**
50	60	6	HMA10 R	**50×60×6 HMA10 R**
	62	5	HM4 R	**50×62×5 HM4 R**
62	78	7	HMA8 R	**62×78×7 HMA8 R**
65	75	8	HM102 R	**65×75×8 HM102 R**

Radial shaft seals – HM and TL seals – inch dimensions
d_1 **0.188 – 0.750** in.

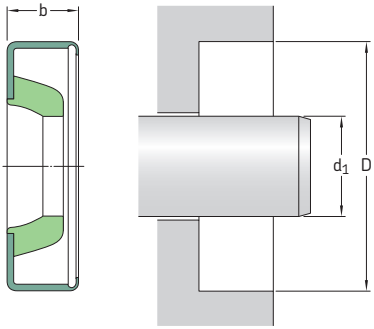

Please see **pages 74** to **76** for housing bore requirements.

Dimensions Shaft d_1	Bore D	Nominal seal width b	Clearance B_3	**Design and lip material**	**Designation**
in.				–	–
0.188	0.500	0.125		HM1 R	**1850**
0.250	0.499	0.188		HM14 R	**2450**
	0.499	0.188		HMA14 V	**2452**
	0.562	0.188		HM14 R	**2470**[1)]
	0.626	0.250		HM14 R	**2490**
	0.749	0.188		HM14 R	**2560**
0.313	0.500	0.125		HM4 R	**3044**
	0.626	0.156		HM14 R	**3060**[1)]
	0.626	0.156		HM14 V	**3061**
	0.626	0.203		HM1 R	**3050**[1)]
	0.633	0.141		HM14 R	**3080**
	0.749	0.250		HM14 R	**3140**
	0.750	0.250		HM3 R	**3141**
	0.862	0.250		HM14 R	**3086**
0.375	0.562	0.093		HM3 V	**535835**
	0.563	0.094		HM3 R	**3621**
	0.628	0.197		HMA10 P	**3632**
	0.687	0.156		HM14 R	**3645**[1)]
	0.749	0.250		HM14 R	**3683**
	0.875	0.250		HM14 R	**3727**
0.404	0.620	0.188		HM14 R	**4010**
	0.862	0.250		HM14 R	**4012**
0.438	0.836	0.188		HM14 R	**4231**
	0.879	0.180		HM8 R	**4256**
	0.999	0.250		HM14 R	**4340**
0.469	0.836	0.188		HM14 P	**4623**
	0.875	0.219		HM14 R	**4628**
0.500	0.687	0.093		HM3 V	**538545**
	0.688	0.094		HM3 R	**4911**
	0.750	0.125		HM14 R	**4912**[1)]

[1)] SKF Bore Tite Coating

Dimensions				Design and lip material	Designation
Shaft	Bore	Nominal seal width	Clearance		
d_1	D	b	B_3		
in.				–	–
0.500	0.820	0.156		HM14 R	**4914**[1]
cont.	0.843	0.250		HM14 R	**4923**[1]
	0.875	0.125		HM14 R	**4925**
	0.875	0.250		HM14 R	**4938**
	0.999	0.188		HM14 R	**4950**[1]
	0.999	0.250		HM14 R	**4990**[1]
	1.124	0.250		HM14 R	**5085**[1]
0.551	1.124	0.203		HM21 R	**5399**[1]
0.563	0.750	0.094		HM3 R	**5500**
	0.875	0.188		HM14 R	**5522**[1]
	0.999	0.219		HM14 R	**5569**[1]
	1.124	0.250		HM14 R	**5685**
0.594	1.124	0.250		HM14 R	**5946**[1]
0.624	1.131	0.188		HM14 R	**6243**[1]
0.625	0.812	0.094		HM3 R	**6105**
	0.813	0.094		HM3 V	**6106**
	0.933	0.188		HM14 R	**6125**[1]
	0.933	0.188		HM14 V	**6126**[1]
	0.937	0.188		HM14 R	**6130**[1]
	1.000	0.125		HM14 P	**6152**[1]
	1.000	0.125		HM14 R	**6153**
	1.063	0.250		HM14 R	**6158**[1]
	1.124	0.250		HM14 R	**6225**[1]
	1.250	0.250		HM14 R	**6323**[1]
	1.259	0.250		HM14 R	**6335**[1]
	1.375	0.250		HM14 R	**6370**[1]
0.669	1.250	0.250		HM14 R	**6806**[1]
0.688	0.999	0.188		HM14 R	**6720**[1]
	1.124	0.250		HM14 R	**6759**[1]
	1.187	0.125		HM14 R	**6762**[1]
	1.375	0.125		HM14 R	**6915**[1]
	1.375	0.250		HM14 R	**6920**[1]
0.750	0.999	0.125		HM14 R	**7410**
	1.000	0.125		HM14 D	**7408**[1]
	1.000	0.125		HM3 V	**535909**
	1.004	0.156		HM8 R	**7409**
	1.006	0.125		HM14 R	**7411**[1]
	1.031	0.313		HMA6 R	**7412**
	1.062	0.188		HM14 R	**7413**
	1.124	0.156		HM14 R	**7415**[1]
	1.187	0.156		HM14 R	**7421**
	1.249	0.250		HM14 R	**530716**[2]
	1.250	0.250		HM14 R	**7464**[1]
	1.259	0.250		HM14 R	**7477**[1]
	1.375	0.250		HM14 R	**7536**
	1.375	0.250		HM14 P	**7537**
	1.437	0.250		HM14 R	**7550**[1]
	1.499	0.250		HM14 R	**7571**[1]

[1] SKF Bore Tite Coating
[2] Stainless steel case

Radial shaft seals – HM and TL seals – inch dimensions
d_1 **0.781 – 1.375** in.

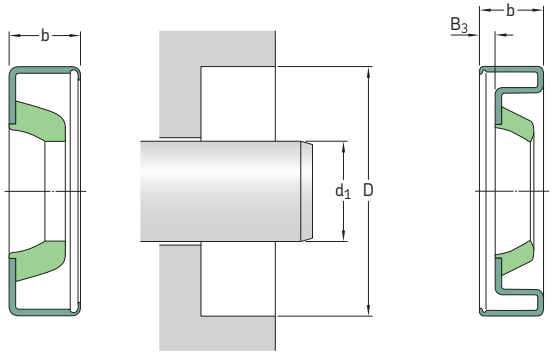

Please see **pages 74** to **76** for housing bore requirements.

Dimensions				**Design and lip material**	**Designation**
Shaft	Bore	Nominal seal width	Clearance		
d_1	D	b	B_3		
in.				–	–
0.781	1.375	0.197		HM14 R	**7831**[1]
0.813	1.063	0.125		HM3 R	**8009**
0.875	1.125	0.125		HM14 R	**8620**
	1.125	0.125		HM14 V	**8619**[1]
	1.246	0.188		HM14 R	**8625**[1]
	1.251	0.188		HM14 R	**8627**
	1.251	0.188		HM3 R	**8631**[2]
	1.255	0.188		HM14 R	**8632**[1]
	1.308	0.250		HM14 R	**8637**[1]
	1.312	0.250		HM14 R	**8645**[1]
	1.375	0.188		HM14 R	**8677**[1]
	1.437	0.250		HM14 R	**8690**[1]
	1.499	0.250		HM21 R	**8741**[1]
	1.562	0.250		HM14 R	**8761**
	1.575	0.250		HM14 R	**8772**
	1.624	0.188		HM8 R	**8802**
0.938	1.375	0.250		HM14 R	**9243**[1]
	1.499	0.250		HM14 R	**9298**[1]
	1.734	0.250		HM14 R	**9354**[1]
1.000	1.250	0.125		HM14 R	**9815**[1]
	1.312	0.125		HM14 R	**9818**[1]
	1.375	0.188		HM14 R	**9820**[1]
	1.437	0.250		HM14 R	**9835**[1]
	1.499	0.188		HM14 R	**9859**[1]
	1.510	0.219		HM21 R	**9853**[1]
	1.561	0.250		HM14 R	**9900**[1]
	1.575	0.250		HM14 R	**9903**[1]
	1.624	0.250		HM14 R	**9932**[1]

[1] SKF Bore Tite Coating
[2] Stainless steel case

Dimensions				Design and lip material	Designation
Shaft	Bore	Nominal seal width	Clearance		
d_1	D	b	B_3		
in.				–	–
1.000	1.752	0.250		HM21 R	**9995**[1]
cont.	1.781	0.250		HM21 R	**530484**
	1.781	0.469		HM14 R	**10034**[1]
	1.781	0.469	0.265	HM18 R	**10035**[1]
	1.851	0.250		HM14 R	**10074**[1]
	1.938	0.250		HM14 R	**10112**[1]
	2.000	0.250		HM21 R	**10152**[1]
	2.250	0.250		HM14 R	**10185**[1]
1.125	1.375	0.125		HM14 R	**11050**
	1.375	0.125		HM14 V	**11052**[1]
	1.438	0.203		HM14 R	**11055**[1]
	1.499	0.188		HM14 R	**11060**[1]
	1.562	0.188		HM8 R	**11065**
	1.562	0.250		HM14 R	**11081**
	1.624	0.250		HM21 R	**11130**[1]
	1.750	0.250		HM14 R	**11150**[1]
	1.781	0.250		HM21 R	**11161**[1]
	1.781	0.469	0.265	HM18 R	**11164**
	1.828	0.250		HM21 R	**11191**
	1.938	0.343	0.352	HM14 R	**11269**
	2.000	0.250		HM21 R	**11334**[1]
	2.047	0.250		HM21 R	**11352**[1]
1.188	2.000	0.250		HM1 R	**11836**
1.190	1.996	0.250		HM1 R	**11846**[1]
1.250	1.500	0.125		HM14 R	**12330**[1]
	1.624	0.250		HM14 R	**12325**[1]
	1.625	0.188		HM14 R	**11096**
	1.686	0.188		HM14 R	**12334**[1]
	1.752	0.188		HM21 R	**12361**[1]
	1.752	0.250		HM21 R	**12369**
	1.828	0.188		HM8 R	**12375**
	1.874	0.250		HM21 R	**12379**[1]
	1.968	0.438		HM14 R	**12398**[1]
	1.968	0.469	0.254	HM18 R	**12399**[1]
	1.979	0.250		HM21 R	**12407**[1]
	1.979	0.406	0.200	HM18 R	**12411**
	1.980	0.406		HMA22 R	**12506**[1]
	1.983	0.250		HM21 R	**12437**
	2.000	0.250		HM21 R	**12481**[1]
	2.062	0.250		HM21 R	**12508**[1]
	2.125	0.250		HM21 R	**12565**[1]
	2.250	0.250		HM14 R	**12582**[1]
	2.328	0.500	0.286	HM18 R	**12611**[1]
1.375	1.750	0.197		HM14 R	**13529**
	1.750	0.197		HM14 V	**13509**[1]

[1] SKF Bore Tite Coating

Radial shaft seals – HM and TL seals – inch dimensions
d_1 **1.375 – 1.750** in.

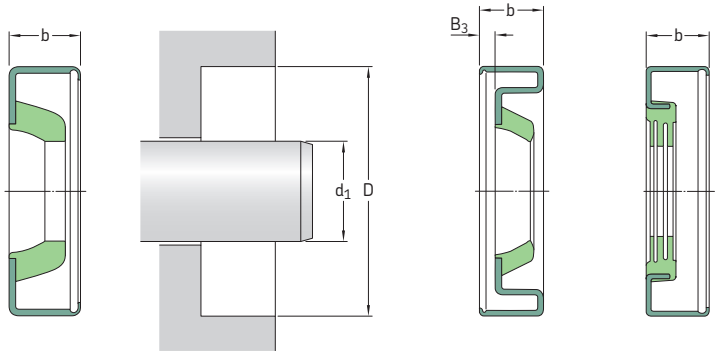

Please see **pages 74** to **76** for housing bore requirements.

Dimensions Shaft d_1	Bore D	Nominal seal width b	Clearance B_3	**Design and lip material**	**Designation**
in.				–	–
1.375	1.834	0.188		HM8 R	**13533**[1]
cont.	1.874	0.188		HM14 R	**13543**
	1.874	0.250		HM14 R	**13548**[1]
	1.874	0.250		HM14 P	**13545**[1]
	1.938	0.250		HM14 R	**13556**[1]
	2.000	0.250		HM21 R	**13573**[1]
	2.106	0.250		HM21 R	**13612**[1]
	2.125	0.250		HM21 R	**13662**[1]
	2.250	0.250		HM14 R	**13689**[1]
	2.282	0.250		HM14 R	**13710**[1]
	2.328	0.406	0.188	HM18 R	**13711**
	2.374	0.250		HM21 R	**13758**[1]
	2.437	0.250		HM21 R	**13796**[1]
	2.502	0.250		HM21 R	**13862**[1]
	2.835	0.594		TL8 R	**13916**[1]
1.438	2.000	0.125		HM4 R	**14209**
	2.250	0.250		HM14 R	**14257**[1]
	2.437	0.250		HM21 R	**14359**[1]
	2.437	0.250		HM21 V	**564365**[1]
1.457	2.047	0.328		HMA11 R	**14600**[2]
1.473	1.971	0.563		HMA10 R	**14631**
1.500	1.874	0.188		HM14 R	**14804**
	1.874	0.188		HM14 V	**14808**[1]
	1.874	0.250		HM14 R	**14810**[1]
	1.938	0.250		HM14 R	**14816**[1]
	1.983	0.188		HM14 R	**14840**
	1.989	0.250		HMA22 R	**14848**[1]

[1] SKF Bore Tite Coating
[2] Press-fit width 0.288 in., axial auxiliary lip

Dimensions				Design and lip material	Designation
Shaft	Bore	Nominal seal width	Clearance		
d_1	D	b	B_3		
in.				–	–
1.500	2.000	0.188		HM8 R	**14869**
cont.	2.000	0.250		HM14 R	**14857**[1]
	2.250	0.250		HM21 R	**14960**
	2.254	0.250		HM21 R	**14966**[1]
	2.328	0.390	0.188	HM18 R	**14975**
	2.328	0.500	0.286	HM18 R	**14974**
	2.374	0.250		HM21 R	**15032**[1]
	2.437	0.250		HM14 R	**15080**[1]
	2.502	0.250		HM21 R	**15160**[1]
	2.623	0.250		HM21 R	**15190**
	2.716	0.250		HM21 R	**15209**[1]
1.563	2.250	0.250		HM14 R	**15532**[1]
	2.374	0.250		HM21 R	**15544**[1]
	2.502	0.250		HM21 R	**15649**[1]
	2.687	0.250		HM21 R	**15719**[1]
1.609	1.906	0.250		HM3 R	**16430**[2]
1.625	2.125	0.250		HM14 R	**16055**[1]
	2.250	0.250		HM21 R	**16065**[1]
	2.328	0.438	0.235	HM18 R	**16069**[1]
	2.328	0.438		TL7 R	**16064**
	2.374	0.250		HM21 R	**16092**[1]
	2.375	0.250		HM14 R	**16095**
	2.437	0.250		HM21 R	**16168**[1]
	2.502	0.250		HM21 R	**16270**[1]
	2.562	0.250		HM21 R	**16285**[1]
	2.562	0.438	0.210	HM18 R	**16289**[1]
	2.623	0.250		HM21 R	**16322**[1]
	2.750	0.250		HM21 R	**16362**[1]
	2.781	0.313		HM14 R	**16384**[1]
1.660	2.440	0.594		HM11 R	**16520**
1.688	2.328	0.500	0.286	HM18 R	**16667**
	2.502	0.281		HM21 R	**16743**[1]
	2.562	0.250		HM21 R	**16754**[1]
1.750	2.250	0.188		HM14 R	**17240**[1]
	2.374	0.250		HM21 R	**17277**
	2.437	0.250		HM21 R	**17310**
	2.441	0.250		HM21 R	**17340**[1]
	2.441	0.250		HM21 R	**17341**[1][2]
	2.441	0.469	0.254	HM18 R	**17359**[1]
	2.502	0.250		HM21 R	**17392**[1]
	2.561	0.250		HM21 R	**17415**[1]
	2.562	0.500	0.286	HM18 R	**17406**[1]
	2.623	0.250		HM21 R	**17461**
	2.716	0.250		HM21 R	**17488**[1]
	2.718	0.359	0.160	HM18 R	**17617**[1]
	2.718	0.359		TL7 R	**17618**
	2.750	0.250		HM21 R	**17544**[1]
	2.830	0.375		HM21 R	**17633**[1]
	2.875	0.250		HM21 R	**17671**[1]
	2.875	0.500		TL7 R	**17674**

[1] SKF Bore Tite Coating
[2] Stainless steel case

Radial shaft seals – HM and TL seals – inch dimensions
d_1 **1.750 – 2.500** in.

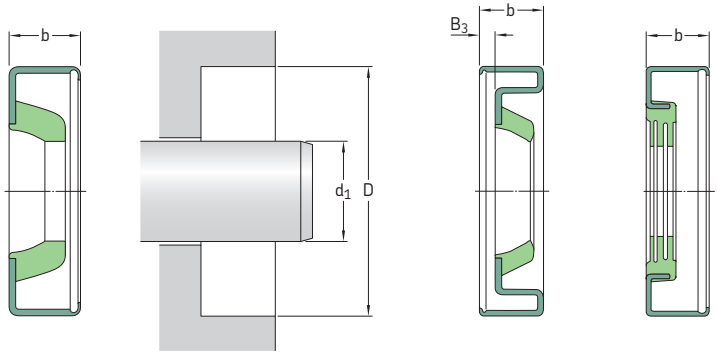

Please see **pages 74** to **76** for housing bore requirements.

Dimensions Shaft d_1	Bore D	Nominal seal width b	Clearance B_3	**Design and lip material**	**Designation**
in.				–	–
1.750	3.000	0.250		HM21 R	**17702**[1]
cont.	3.149	0.290		TL6 R	**17724**
1.781	2.126	0.250		HM14 R	**17802**[2]
1.811	2.697	0.295		HMA8 R	**17955**
1.813	2.562	0.438	0.224	HM18 R	**18050**[1]
	2.719	0.270		TL7 R	**18127**
	2.965	0.250		HM1 R	**18258**
1.875	2.502	0.250		HM21 R	**18558**[1]
	2.623	0.250		HM21 R	**18591**[1]
	2.750	0.250		HM21 R	**18659**[1]
	2.780	0.250		HM21 R	**18704**[1]
	2.875	0.250		HM21 R	**18750**[1]
	2.997	0.250		HM14 R	**18808**[1]
	3.000	0.250		HM21 R	**18823**[1]
	3.150	0.250		HM21 R	**18889**[1]
1.938	2.502	0.281		HM14 R	**19219**[1]
	2.875	0.250		HM21 R	**19306**[1]
	2.686	0.594		TL8 R	**19251**[1]
1.945	2.892	0.294		TL6 R	**19510**[1]
1.970	2.362	0.158		HM14 D	**532627**
2.000	2.371	0.250		HM14 R	**19737**[1]
	2.375	0.188		HM14 R	**19733**
	2.500	0.250		HM1 R	**19748**
	2.502	0.250		HM14 R	**19754**[1]

[1] SKF Bore Tite Coating
[2] Stainless steel case

Dimensions				Design and lip material	Designation
Shaft	Bore	Nominal seal width	Clearance		
d_1	D	b	B_3		
in.				–	–
2.000	2.623	0.250		HM21 R	**19763**[1]
cont.	2.623	0.250		HM21 V	**19746**[1]
	2.631	0.272		HMA94 R	**20016**[2]
	2.635	0.234		HM14 R	**19770**[1]
	2.686	0.250		HM21 R	**19783**[1]
	2.750	0.250		HM21 R	**19834**[1]
	2.752	0.188		HM14 R	**19820**[1]
	2.875	0.250		HM21 R	**19880**[1]
	2.965	0.313		HM14 R	**19940**[1]
	2.965	0.500	0.275	HM14 R	**19938**[1]
	2.997	0.250		HM21 R	**19965**
	3.000	0.250		HM21 R	**20006**[1]
	3.061	0.250		HM21 R	**20044**[1]
	3.148	0.250		HM14 R	**20078**
	3.623	0.250		HM21 R	**20148**
2.063	3.149	0.500		TL6 D	**20672**[1][3]
	3.150	0.266		TL7 R	**20674**
2.094	2.718	0.359	0.160	HM18 R	**20952**[1]
	2.750	0.250		HM21 R	**20920**[1]
2.125	2.750	0.250		HM21 R	**21059**[1]
	2.875	0.250		HM14 R	**21101**[1]
	2.891	0.250		HM14 R	**21121**[1]
	3.000	0.250		HM21 R	**21159**[1]
	3.061	0.250		HM21 R	**21208**[1]
	3.189	0.250		HM21 R	**21265**[1]
2.240	3.189	0.610		HM14 R	**22614**[1]
2.250	2.625	0.188		HM14 R	**22306**[1]
	2.875	0.250		HM21 R	**22325**
	3.000	0.250		HM21 R	**22368**[1]
	3.061	0.250		HM21 R	**22392**
	3.125	0.563	0.214	HM18 R	**22411**
	3.251	0.250		HM21 R	**22468**
	3.440	0.250		HM14 R	**22565**[1]
2.297	3.148	0.359	0.185	HM18 R	**22870**
2.313	3.000	0.250		HM14 R	**23035**[1]
	3.065	0.281		HM1 R	**23098**
	3.500	0.250		HM21 R	**23240**[1]
2.375	2.997	0.250		HM21 R	**23630**[1]
	3.000	0.250		HM21 R	**23640**
	3.350	0.250		HM21 R	**23725**[1]
	3.543	0.250		HM21 R	**23815**[1]
2.500	3.000	0.313		HM1 R	**24865**
	3.000	0.250		HM14 R	**24863**[1]
	3.125	0.250		HM21 R	**24875**[1]
	3.150	0.250		HM21 R	**24880**[1]
	3.251	0.250		HM21 R	**24904**[1]
	3.500	0.250		HM21 R	**25007**[1]

[1] SKF Bore Tite Coating
[2] Press-fit width 0.257 in.
[3] Press-fit width 0.395 in.

Radial shaft seals – HM and TL seals – inch dimensions
d_1 **2.625 – 9.500** in.

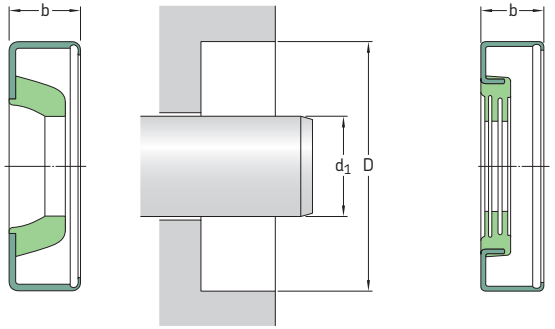

Please see **pages 74** to **76** for housing bore requirements.

Dimensions Shaft d_1	Bore D	Nominal seal width b	Clearance B_3	**Design and lip material**	**Designation**
in.				–	–
2.625	3.371	0.250		HM14 R	**26144**[1]
	3.623	0.250		HM21 R	**26260**[1]
	3.751	0.715		TL4 RR	**26289**[2]
	3.813	0.415		TL5 R	**26310**[3]
2.750	3.125	0.188		HM1 R	**27210**
	3.250	0.313		HM1 R	**27225**
	3.500	0.250		HM14 R	**27271**[1]
	3.500	0.250		HM14 V	**546751**[1]
	3.751	0.250		HM21 R	**27394**[1]
2.875	3.751	0.250		HM21 R	**28700**[1]
	3.876	0.188		HM1 R	**28725**[1]
	3.876	0.250		HM21 R	**28751**[1]
	4.003	0.250		HM21 R	**28800**[1]
2.953	4.724	0.320		TL1 R	**29852**[1]
3.000	3.500	0.313		HM1 R	**29840**
	3.623	0.250		HM14 R	**29850**
	3.751	0.250		HM21 R	**29863**[1]
	4.000	0.250		HM21 V	**539075**
	4.003	0.250		HM21 R	**29968**
	4.249	0.250		HM21 R	**30049**[1]
3.125	3.751	0.250		HMA1 R	**31129**[1]
	4.125	0.250		HMA1 R	**31192**
3.250	3.750	0.250		HMA1 R	**32325**[1]
	4.249	0.250		HM14 R	**32412**[1]
	4.501	0.250		HM21 R	**32510**[1]

[1] SKF Bore Tite Coating
[2] Press-fit width 0.640 in.
[3] Press-fit width 0.300 in.

Dimensions				Design and lip material	Designation
Shaft	Bore	Nominal seal width	Clearance		
d_1	D	b	B_3		
in.				–	–
3.500	4.000	0.300		HM1 R	**34835**
	4.003	0.250		HM14 R	**34840**[1]
	4.125	0.250		HM14 R	**34848**
	4.125	0.250		HM14 V	**546770**[1]
	4.450	0.531		HM12 R	**34885**
	4.501	0.250		HM21 R	**34967**
	4.751	0.250		HM21 R	**35042**[1]
3.750	4.376	0.250		HM14 R	**37320**[1]
	4.376	0.250		HM14 V	**37325**[1]
4.000	4.501	0.250		HM14 R	**39835**[1]
	4.501	0.250		HM14 V	**546387**[1]
	4.876	0.250		HM21 R	**39860**[1]
	4.999	0.250		HM21 R	**39961**[1]
4.250	4.813	0.313		HM14 R	**42340**
	5.126	0.250		HM21 R	**42380**[1]
	5.251	0.250		HM21 R	**42470**[1]
4.500	5.501	0.250		HM14 R	**45025**
4.750	5.375	0.313		HM14 R	**47378**[1]
4.875	5.501	0.250		HM14 R	**48650**
5.000	6.250	0.250		HM21 R	**50070**[1]
5.250	6.250	0.250		HM4 R	**52475**
5.750	6.375	0.250		HMA1 R	**57502**
	7.003	0.250		HMA21 R	**57571**
6.000	7.500	0.250		HM4 R	**60075**
6.374	8.749	0.421		HMA96 R	**181948**
7.938	8.750	0.344		HM14 R	**79302**
9.500	10.750	0.313		HM21 R	**95052**

[1] SKF Bore Tite Coating

X seals, sealing against housing bore

SKF offers an assortment of radial shaft seals that have a press fit on the shaft and with sealing lip(s) that contact the housing bore. For a proper press fit, the requirements specified for housing bores on **pages 74** to **76** should be adhered to for the shaft. Shaft requirements specified on **pages 70** to **72** apply for the housing bore when using X seals. These seals are generally installed with the sealing lip(s) facing outward to provide optimum exclusion. Main applications are greased lubricated agriculture machinery. The selection to the right shows the most commonly used SKF designs. Contact SKF for more information on available designs.

See **matrix 1** on **pages 90** and **91** for general permissible operating conditions.

X1



X2



X4



X12



X13



X14



X15



XH15



Radial shaft seals – X seals – metric dimensions
d_1 **25,40 – 82,55** mm

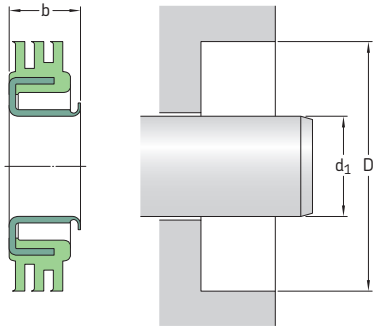

For proper press fit on shaft, refer to housing bore tolerances specified on **pages 74** to **76**.

Dimensions Shaft d_1	Bore D	Nominal seal width b	**Design and lip material**	**Designation**
mm			–	–
25,40	59,84	6,86	X15 R	**538266**
38,10	55,55	12,70	X1 L	**14896**
	58,06	6,86	X15 R	**14970**
	58,06	10,67	XH15 R	**14971**
	62,53	7,37	X13 R	**15174**
39,70	56,82	7,37	X4 R	**15530**
	64,29	7,24	X15 R	**15660**
	69,85	11,13	X R	**15702**
41,28	62,53	6,35	X15 R	**16286**
42,88	67,31	7,37	X4 R	**16818**
44,45	69,04	7,47	X4 R	**17485**
	70,76	7,47	X15 R	**17620**
46,05	61,16	7,62	X15 R	**18030**
47,57	68,99	7,14	X13 R	**18630**
50,57	73,66	7,37	X4 R	**19720**
50,80	71,17	6,35	X15 D	**19844**
	73,03	6,50	XHM R	**19882**
53,98	82,55	6,86	X15 R	**21298**
57,15	86,36	7,47	X15 R	**22563**
63,40	93,27	7,95	X15 R	**25078**
76,20	101,60	12,70	X2 L	**29900**
	114,94	9,53	X12 R	**30108**
80,00	101,45	15,00	X15 R	**31514**
82,55	113,49	8,00	X4 R	**32437**
	114,30	7,95	X15 R	**32441**

Radial shaft seals – X seals – metric dimensions
d_1 **86,36 – 158,75** mm

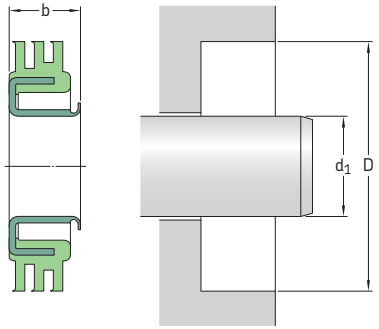

For proper press fit on shaft, refer to housing bore tolerances specified on **pages 74** to **76**.

Dimensions Shaft d_1	Bore D	Nominal seal width b	**Design and lip material**	**Designation**
mm			–	–
86,36	114,30	7,14	X14 V	**34000**[1)]
92,08	114,30	7,47	X15 R	**36172**
98,43	136,91	9,53	X12 R	**38590**
101,60	147,65	12,70	X R	**40131**
111,13	136,47	14,48	X1 P	**44269**
114,30	152,78 162,79	13,97 10,54	X12 R X12 D	**44892** **45161**
120,65	152,45	7,62	X15 R	**47455**
139,70	172,21	9,65	X R	**55152**
158,75	196,85	8,89	X R	**62530**

[1)] SKF Bore Tite Coating on inside diameter

Radial shaft seals – X seals – inch dimensions
d_1 **1.000 – 3.250** in.

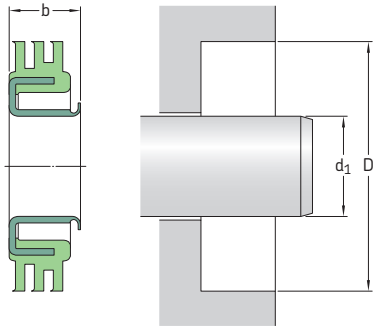

For proper press fit on shaft, refer to housing bore tolerances specified on **pages 74** to **76**.

Dimensions			Design and lip material	Designation
Shaft d_1	Bore D	Nominal seal width b		
in.			–	–
1.000	2.356	0.270	X15 R	**538266**
1.500	2.187	0.500	X1 L	**14896**
	2.286	0.270	X15 R	**14970**
	2.286	0.420	XH15 R	**14971**
	2.462	0.290	X13 R	**15174**
1.563	2.237	0.290	X4 R	**15530**
	2.531	0.285	X15 R	**15660**
	2.684	0.438	X R	**15702**
1.625	2.462	0.250	X15 R	**16286**
1.688	2.650	0.290	X4 R	**16818**
1.750	2.718	0.294	X4 R	**17485**
	2.786	0.294	X15 R	**17620**
1.813	2.408	0.300	X15 R	**18030**
1.873	2.716	0.281	X13 R	**18630**
1.991	2.900	0.290	X4 R	**19720**
2.000	2.802	0.250	X15 D	**19844**
	2.875	0.256	XHM R	**19882**
2.125	3.250	0.270	X15 R	**21298**
2.250	3.400	0.294	X15 R	**22563**
2.496	3.672	0.313	X15 R	**25078**
3.000	4.000	0.500	X2 L	**29900**
	4.525	0.375	X12 R	**30108**
3.150	3.994	0.591	X15 R	**31514**
3.250	4.468	0.315	X4 R	**32437**
	4.500	0.313	X15 R	**32441**

Radial shaft seals – X seals – inch dimensions
d_1 **3.400 – 6.250** in.

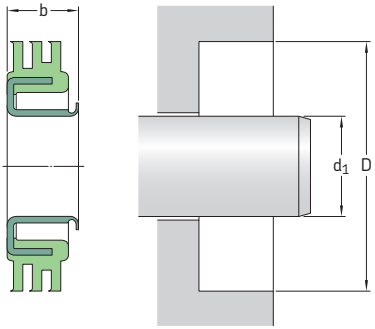

For proper press fit on shaft, refer to housing bore tolerances specified on **pages 74** to **76**.

Dimensions Shaft d_1	Bore D	Nominal seal width b	**Design and lip material**	**Designation**
in.			–	–
3.400	4.500	0.281	X14 V	**34000**[1)]
3.625	4.500	0.294	X15 R	**36172**
3.875	5.390	0.375	X12 R	**38590**
4.000	5.813	0.500	X R	**40131**
4.375	5.373	0.570	X1 P	**44269**
4.500	6.015 6.409	0.550 0.415	X12 R X12 D	**44892** **45161**
4.750	6.002	0.300	X15 R	**47455**
5.500	6.780	0.380	X R	**55152**
6.250	7.750	0.350	X R	**62530**

[1)] SKF Bore Tite Coating on inside diameter

Seals for heavy industrial applications, selected main designs, self-retaining (open housing)

Standard design (preferred design)	**Other basic designs**	**Material code**	**Operating temperature range**				**Pressure differential**
			from	to	from	to	
		–	°C		°F		MPa *(psi)*
 HDS7	 HDS6	R D H V (HDS6 only)	–40 –40 –40 –40	+100 +100 +150 +200	*–40* *–40* *–40* *–40*	*+210* *+210* *+300* *+390*	0
 HDL	 HDLA	R H V	–40 –40 –40	+100 +150 +200	*–40* *–40* *–40*	*+210* *+300* *+390*	0,1 *(15)*
 SBF		R V	–40 –40	+100 +200	*–40* *–40*	*+210* *+390*	0,1 *(15)*
 HDS2	 HDS1  HDS4	R D H V	–40 –40 –40 –40	+100 +100 +150 +200	*–40* *–40* *–40* *–40*	*+210* *+210* *+300* *+390*	0,1 *(15)*
 HDSA2	 HDSA1  HDSB2  HDSB1	R D H V	–40 –40 –40 –40	+100 +100 +150 +200	*–40* *–40* *–40* –40	*+210* *+210* *+300* *+390*	0,1 *(15)*
 HDSE2	 HDSE1  HDSD2  HDSD1	R D H V	–40 –40 –40 –40	+100 +100 +150 +200	*–40* *–40* *–40* *–40*	*+210* *+210* *+300* *+390*	0,1 *(15)*

Shaft-to-bore misalignment (STBM) TIR	**Dynamic runout** (DRO) TIR	**Maximum shaft surface speed**	**Ease of installation**	**Retention and exclusion ability**
mm *(in.)*	mm *(in.)*	m/s *(ft/min)*	–	–
1,6 *(0.062)*	2,4 *(0.093)*	25 *(4 900)*	Excellent	Highly effective exclusion of water and solid contaminants and excellent retention of grease
2,5 *(0.1)*	2,4 *(0.093)*	24 *(4 700)* 25 *(4 900)* 35 *(6 900)*	Good	Excellent retention of light oils, even at high surface speeds and misalignment
1,5 *(0.06)*	2,4 *(0.093)*	25 *(4 900)*	Excellent	Excellent oil or grease retention
1,6 *(0.062)*	2,4 *(0.093)*	25 *(4 900)*	HDS2, HDS4: Excellent HDS1: Good	Excellent oil or grease retention
1,6 *(0.062)*	2,4 *(0.093)*	25 *(4 900)*	Excellent to good, varies with equipment design	HDSA/B: Excellent oil or grease retention and exclusion of light to moderate contaminants
1,6 *(0.062)*	2,4 *(0.093)*	25 *(4 900)*	HDSD2/HDSE2: Excellent HDSD1/HDSE1: Good	Excellent oil or grease retention and exclusion of light to moderate contaminants or separation of two media Good grease retention, increased protection against contaminants

Continued →

Seals for heavy industrial applications, selected main designs, axially compressed (housing with cover plate)

Standard design (preferred design)	**Other basic designs**	**Material code**	**Operating temperature range**				**Pressure differential**
			from	to	from	to	
		–	°C		°F		MPa *(psi)*
 HS5	 HS4	R D H V	–40 –40 –40 –40	+100 +100 +150 +200	*–40* *–40* *–40* *–40*	*+210* *+210* *+300* *+390*	0,07 *(11)*
 HS8	 HS6	 HS7	R D H V	–40 –40 –40 –40	+100 +100 +150 +200	*–40* *–40* *–40* *–40*	*+210* *+210* *+300* *+390*	0
 HSF5	 HSF6	 HSF7	R V	–40 –40	+100 +100	*–40* *–40*	*+210* *+390*	0,03 *(5)*
	 HSF8	 HSF9						
 HSF1	 HSF2	 HSF3	R V	–40 –40	+100 +200	*–40* *–40*	*+210* *+390*	0
	 HSF4							

Shaft-to-bore misalignment (STBM) TIR	**Dynamic runout** (DRO) TIR	**Maximum shaft surface speed**	**Ease of installation**	**Retention and exclusion ability**
mm *(in.)*	mm *(in.)*	m/s *(ft/min)*	–	–
1,6 *(0.062)*	2,4 *(0.093)*	HS4: 15 *(2 950)* HS5: 13 *(2 560)*	Good	HS4, HS5: Good oil retention
1,6 *(0.062)*	2,4 *(0.093)*	HS6: 10 *(1 970)* HS7: 7,5 *(1 480)* HS8: 10 *(1 970)*	HS6: Fair HS7: Excellent HS8: Good	HS6, HS8: Good to excellent oil or grease retention HS7: Good (grease retention only)
1,5 *(0.06)*	2,4 *(0.093)*	15 *(2 950)* depending on the operating conditions	Good to excellent	Excellent oil retention
1,5 *(0.06)*	2,4 *(0.093)*	15 *(2 950)* depending on the operating conditions	Fair to good depending on the available space for installation	Good to excellent oil retention

Seals for heavy industrial applications

General

Heavy industries like metal, construction, wind energy, forestry, mining and pulp and paper provide a challenging environment for radial shaft seals. Operating within a wide range of speeds, temperatures and environmental conditions, these seals need to reliably retain lubricants while preventing harsh contaminants from entering the system.

SKF seals for heavy industrial applications are available in a wide assortment of designs and materials to meet the varying demands of each challenging application. The assortment includes heavy-duty metal-cased seals, rubber outside diameter seals with metal inserts or fabric-reinforcement and all-rubber seals. To simplify seal selection, **table 18** on **page 213** can be used for general guidance. See also **matrix 2** on **pages 198** to **201**.

Metal-cased seals

General

SKF metal-cased seals are specially designed to withstand the extreme conditions encountered in heavy-duty applications. The designs include the highly engineered HDS7, the high-performance HDL seals and the commonly used HDS1 and HDS2 seals as well as the HDSA, B, C, D and E seals. These seals perform exceptionally well in the very contaminated environment of metal rolling mills, the high-speed and high-temperature environment of paper mills, as well as more universal applications like industrial gearboxes.

HDS7

The ingress of water and solid contaminants is a common cause of bearing failures. To solve this, SKF developed the HDS7 seal with enhanced exclusion capabilities (→ **fig. 33**). It was originally designed for grease lubricated bearings in rolling mill stands, where water and scale are a constant threat to bearing service life. The HDS7 is also recommended for use in large gearboxes, coal pulverizers and cement grinders. Customers have reported that the HDS7 seal is easier to install and provides longer service life than similar seal designs.

Fig. 33

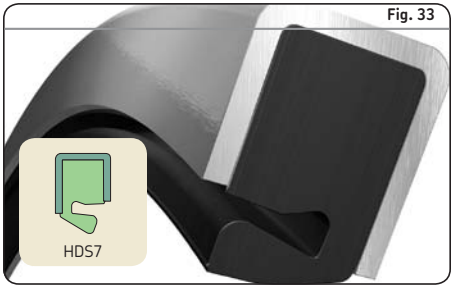

The HDS7 seal features an optimized non-spring-loaded lip profile, designed to retain grease and aggressively pump contaminants away from the lip. The lip concept of HDS7 seals also reduces radial loads, which otherwise can lead to elevated underlip temperatures and increased seal wear. HDS7 seals are installed with the sealing lip facing the air side. The HDS7 can also be used in oil lubricated applications in back-to-back arrangements with a spring-loaded seal design, e.g. an HDS1 or HDS2 (→ **figs. 35** and **36**), in the includer position.

HDS7 seals can also be equipped with a PTFE auxiliary lip positioned and directed as shown in **fig. 42** on **page 206** and/or with an elastomer applied to the metal outside diameter (→ **fig. 43** on **page 206**).

The HDS7 seal is available with a nitrile sealing lip for general use, SKF Duralip for increased wear resistance in abrasive environments and SKF Duratemp that combines improved wear resistance with increased temperature capability. For certain applications, SKF Duralife can also be specified. See **page 30** for additional information about different sealing lip materials.

Spacer lugs are available as an option. See **page 211** for additional information.

HDS7 seals are available for all shaft diameters within the ranges listed in **table 19** on **page 214**. The product tables, starting on **page 216**, list a selection of sizes. Contact your SKF sales representative for additional information.

HDL seals

HDL seals (→ **fig. 34**) are premium metal-cased radial shaft seals for oil lubricated applications. They are specially designed for tough operating conditions including high speeds and temperatures, considerable runout and/or misalignment. The high-speed performance characteristics of HDL seals make them an excellent choice for the severe operating conditions encountered in the rolls of paper-making machines.

HDL seals feature the combination of a stainless steel garter spring and individual stainless steel finger springs around the entire circumference of the seal. This spring combination enables the seal to work effectively and provides long service life, even under severe operating conditions.

HDLA seals are designed with an elastomeric auxiliary lip for added protection against contaminants.

Both HDL and HDLA seals are available with a sealing lip made of either nitrile rubber, hydrogenated nitrile rubber or fluoro rubber (→ **page 31**). These materials enable the seals to perform well under a variety of operating speeds and temperatures. Fixed-width spacer lugs are available for both HDL and HDLA seals on a quotation basis.

A selection of available sizes is listed in the product tables starting on **page 226**. Contact your SKF sales representative for additional information regarding availability.

HDS1 and HDS2

The most commonly used metal-cased seals are the HDS1 and HDS2 seals, designed for general-purpose applications. They are equipped with a heavy-duty metal case and a stainless steel garter spring.

The HDS1 seal (→ **fig. 35**) has a spring installed in the SKF Springlock groove (→ **fig. 56** on **page 212**). For blind installations, where spring displacement may go undetected, HDS2 seals (→ **fig. 36**) have an SKF Springcover (→ **fig. 57** on **page 212**) that retains the spring in the groove. The HDS1 and HDS2 seals are available with adjustable or fixed-width spacer lugs (→ **page 211**).

The HDS1 and HDS2 seals can be designed with a PTFE auxiliary lip, positioned and directed in either of the two ways shown in **figs. 41** and **42** and/or with an elastomer applied to the metal outside diameter (→ **fig. 43** on **page 206**).

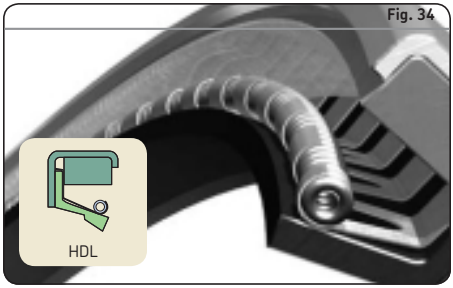

Fig. 34

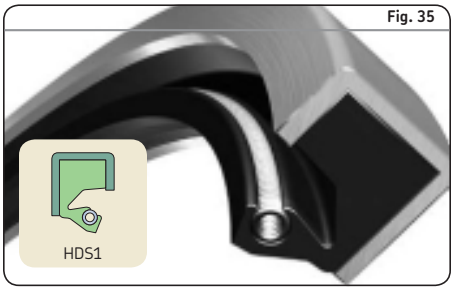

Fig. 35

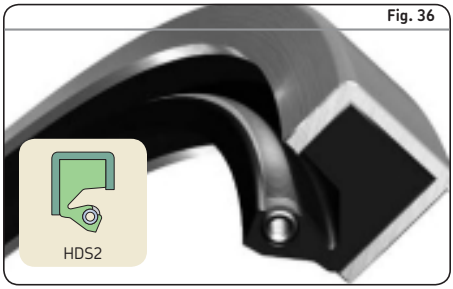

Fig. 36

Nitrile rubber is standard for these seal designs, but both of them are also available in SKF Duralip, SKF Duratemp and SKF Duralife.

The HDS1 and HDS2 seals are available for all shaft diameters within the ranges listed in **table 19** on **page 214**. The product tables starting on **page 242** list a selection of sizes. Contact your SKF sales representative for additional information.

HDSA and HDSB eals

HDSA and HDSB seals are designed with an elastomeric auxiliary lip in addition to the sealing lip (→ **figs. 37** to **38**). They are generally used where additional protection from contaminants is needed and where there is insufficient space for more than one seal.

The chamfer on the auxiliary lip of an HDSA seal faces the sealing lip, enabling easier shaft installation from the sealing lip direction. The chamfer of the auxiliary lip of HDSB seals faces away from the sealing lip, enabling easier shaft installation from the other direction. The disadvantage is, however, a slightly reduced exclusion ability.

HDSA2 and HDSB2 seals are designed with an SKF Springcover, while HDSA1 and HDSB1 seals are designed without an SKF Springcover (→ **fig. 57** on **page 212**).

HDSA and HDSB seals can also be designed with an elastomer applied to the metal outside diameter (→ **fig. 43** on **page 206**).

HDSA and HDSB seals are available with sealing lips made of nitrile rubber, SKF Duralip, SKF Duratemp or SKF Duralife. For shaft diameters up to 1 200 mm (*47 in.*), the standard auxiliary lip is made of SKF Duralip.

These seals are available for all shaft diameters within the ranges listed in **table 19** on **page 214**. Also, see the product tables starting on **page 264** for a selection of sizes. Contact your SKF sales representative for additional information.

Fig. 37



Fig. 38



HDSD and HDSE seals

HDSD seals (→ **fig. 39**) are designed with two sealing lips facing opposite directions. These seals are typically used in applications where two fluids must be kept separated. When using an HDSD seal, it is very important to provide a means to lubricate the sealing lips. To do this, the cavity between the sealing lips must be filled with grease prior to installation and/or during operation via lubrication holes drilled through the metal case into the cavity.

HDSE seals (→ **fig. 40**) feature two sealing lips facing the same direction. They are typically used when a back-up seal would otherwise be needed for retention or exclusion purposes. Like HDSD seals, HDSE seals must be equipped with a means to lubricate the sealing lips so that the seal functions properly.

HDSD and HDSE seals are available with an SKF Springcover (HDSD2, HDSE2) or without an SKF Springcover (HDSD1, HDSE1) (→ **fig. 57** on **page 212**). All of them are available in nitrile rubber, SKF Duralip, SKF Duratemp or SKF Duralife.

HDSE seals can also be designed with a PTFE auxiliary lip positioned and directed in either of the two ways shown in **figs. 41** and **42** on **page 206**.

HDSD and HDSE seals are available for all shaft diameters within the ranges listed in **table 19** on **page 214**. The product tables starting on **page 272** list a selection of sizes. Contact your SKF sales representative for additional information.

Fig. 39



Fig. 40

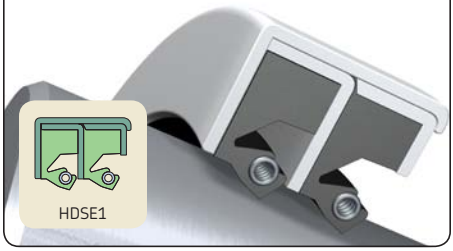

Additional design options

HDS1, HDS2, HDS7 and HDSE seals can be designed with an auxiliary PTFE lip to further protect the bearing and sealing lip(s) from dust particles in heavily contaminated environments, for example mining and cement industries. The PTFE lip is then positioned and directed as shown in **fig. 41**.

The PTFE lip can also be positioned and directed to provide additional lubricant retention (→ **fig. 42**).

The PTFE lip is clamped between the metal case and the rubber seal body without significantly increasing the total seal width. It has very good chemical and wear resistance, can withstand dry running and contributes to improved sealing performance while only generating a minimal friction torque. The combination of a PTFE auxiliary lip and a sealing lip made of the fluoro rubber compound SKF Duralife, developed by SKF, creates a particularly effective sealing solution.

Special care must be taken to prevent damaging the PTFE lip during installation. Refer to instructions in paragraph *PTFE seals* on **page 85**.

The letters F and H in the product name indicate a PTFE auxiliary lip design including the lip's position and direction; see for example the HDSF2 (→ **fig. 41**) and HDSH2 (→ **fig. 42**).

HDS1, HDS2 and HDS7 seals (with or without an auxiliary PTFE lip) as well as the HDSA and HDSB seals are available with an elastomer applied to the outside diameter for use in applications where bore temperatures reach maximum 100 °C *(210 °F)* (→ **fig. 43**). This design feature has several important advantages:

- Compensates for imperfections in the housing bore surface, improving the sealing performance by minimizing bypass leakage.
- Prevents contaminants from entering through gaps between housing bore and the seal outside diameter at, for example, out-of-round conditions.
- Minimizes the risk of damage to the housing bore during installation and removal.

This design option is indicated by the letter K in the product name; see for example the HDS2K (→ **fig. 43**).

Fig. 41



Fig. 42



Fig. 43



Rubber outside diameter seals

General

The assortment of SKF rubber outside diameter seals includes metal-inserted, fabric-reinforced and all-rubber designs. The fabric-reinforced and all-rubber seals are available in solid and split designs.

Rubber outside diameter seals offer a number of important operating and installation benefits and are especially suitable for split housings. The rubber prevents damage to the housing bore during installation, which otherwise can cause bypass leakage. Compared to metal-cased seals, rubber outside diameter seals can tolerate higher surface roughness in the housing bore. They also resist corrosion and do not seize in the bore, even years after installation.

As a result of lower press-in forces, rubber outside diameter seals are often easier to install than metal-cased seals. They can be installed by hand or with simple tools even when the diameters are very large. This is especially true of the fabric-reinforced and all-rubber designs. Furthermore, in the case of split seals, there is no need to remove the shaft or other machine components when replacing the seal.

SBF metal-inserted seals

SBF seals (→ **fig. 44**) are spring-loaded and designed with a flexible metal stiffening ring that enables the seal to be installed without the use of a cover plate. SBF seals can be used as an upgrade to fabric-reinforced seals in many applications that are either grease or oil lubricated. SBF seals are available in both nitrile and fluoro rubber. A selection of available sizes is listed in the product tables starting on **page 274**. Contact your SKF sales representative for additional information regarding availability.

HDS4 and HDS6 metal-inserted seals

HDS4 seals (→ **fig. 45**) feature a patented moulded-in garter spring that cannot be displaced during installation. They also provide very good oil retention while minimizing wear on the shaft. HDS4 seals are typically used in the high-speed applications found in the pulp and paper industry. HDS6 seals (→ **fig. 46**) are similar in design to HDS4 seals but do not contain a garter spring. HDS6 seals are designed for grease retention.

Fig. 44

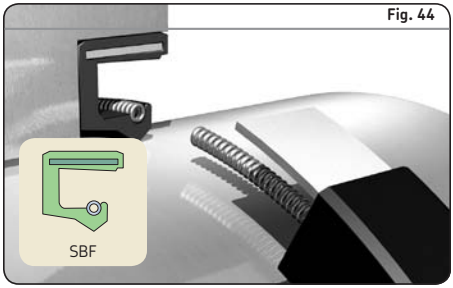

Fig. 45

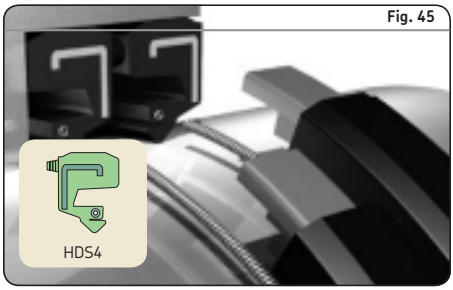

Fig. 46

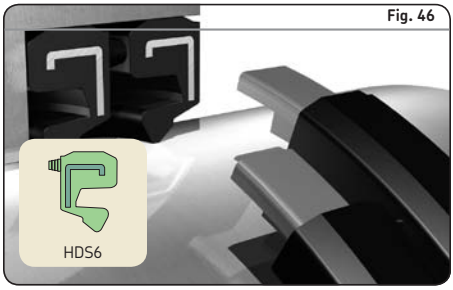

Both types are made standard of nitrile rubber. They are also available in any of the sealing lip materials used for the metal-cased HDS seals. Both HDS4 and HDS6 seals are equipped with moulded 12,7 mm *(0.5 in.)* spacer lugs that can be trimmed or removed if necessary.

Contact your SKF sales representative for information regarding availability.

HSF fabric-reinforced seals

The spring-loaded HSF seal assortment consists of the HSF5, HSF6, HSF7 and HSF8 solid seals and their split versions, HSF1, HSF2, HSF3 and HSF4 seals (→ **figs. 47** to **49**). There is also a pressure profile seal, HSF9, available in the solid version only. These seals are mainly used in heavy-duty applications like gear drives, propeller shafts, cold and hot mill work rolls, pumps, paper machinery, etc.

HSF5, HSF6 and HSF7 seals have a strong, flexible, fabric-reinforced rubber back instead of a metal case. HSF5 seals have a basic single-lip design. HSF6 seals are equipped with radial lubrication grooves in the back of the seal and HSF7 seals include a circumferential lubrication groove. HSF4 and HSF8 seals are designed with an auxiliary lip for additional protection against contaminants.

Threaded spring connections are standard for all HSF seals (→ **fig. 54a** on **page 211**). For the split versions, a hook-and-eye connection can also be specified (→ **fig. 54b** on **page 211**).

All HSF seals are manufactured oversized relative to the housing bore diameter and depth to enable proper compression and stability. A cover plate is required to properly install and apply all HSF seals (→ **figs. 25** and **26** on **pages 82** and **83**). The plate creates an axial preload to provide reliable static sealing performance. The plate should also avoid seal distortion during installation. HSF seals are available in nitrile rubber, hydrogenated nitrile rubber and fluoro rubber materials.

A selection of available HSF seal sizes is listed in the product tables starting on **page 276**. Contact your SKF sales representative for additional information regarding availability.



Fig. 47

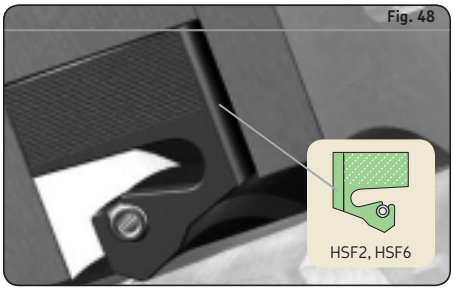

Fig. 48

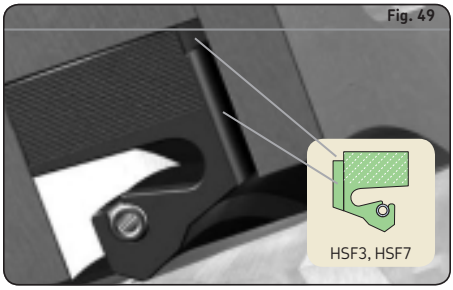

Fig. 49

HS all-rubber seals

HS seals, available in solid and split executions, are all-rubber seals, designed without any reinforcement. They are manufactured oversized relative to the housing bore diameter and depth to enable proper compression and stability. A cover plate (→ **figs. 25** and **26** on **pages 82** and **83**) is required to compress the seal axially, helping to stabilize the seal in the housing bore.

A stainless steel garter spring located in the SKF Springlock groove (→ **fig. 56** on **page 212**) provides the appropriate radial load against the shaft.

For certain applications, HS seals are also available with an auxiliary lip and/or band clamp. Contact SKF for more information.

HS seals are available in nitrile rubber, SKF Duralip, SKF Duratemp or SKF Duralife for all shaft diameters within the ranges listed in **table 20** on **page 215**. Also, see the product tables starting on **page 302** for a selection of sizes. Contact your SKF sales representative for additional information.

HS solid seals

Standard solid HS seals can accommodate shaft diameters starting at 165 mm *(6.5 in.)* but basically do not have an upper size limit.

HS4 seals (→ **fig. 50**) have a solid, all-rubber design and incorporate a spring-loaded sealing lip. They feature an SKF Springlock groove (→ **fig. 56** on **page 212**) and are suitable for both vertical and horizontal shafts. For a proper fit in the housing bore, a cover plate is required (→ **figs. 25** and **26** on **pages 82** and **83**).

HS5 seals (→ **fig. 51**) have the same basic design as HS4 seals with the addition of an SKF Springcover (→ **fig. 57** on **page 212**) to hold the spring in place during installation and protect it from contaminants.

Both designs have a threaded spring connection (→ **fig. 54a** on **page 211**).

Fig. 50

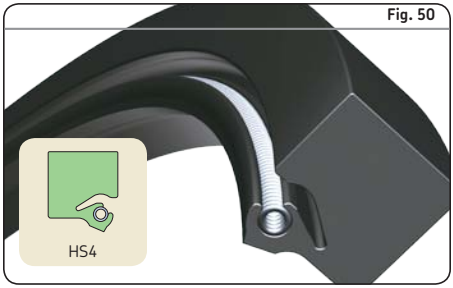

Fig. 51

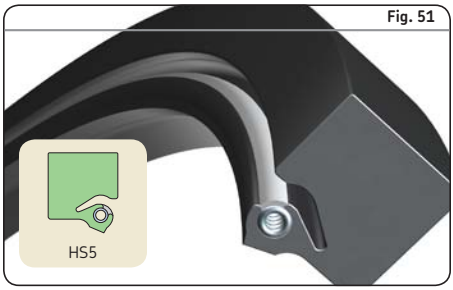

HS split seals

In applications where shaft removal is impractical, HS all-rubber split seals are an excellent choice. They are simply placed around the shaft and pushed into the housing bore with the split at the 12 o'clock position. A cover plate must be used to compress the seal axially to stabilize it in the housing bore.

HS split seals perform best with grease or high-viscosity lubricants. However, low-viscosity lubricants are also suitable if the level of lubricant is kept below the shaft centre line, which is particularly important at considerable surface speeds. Split seals are preferably used on horizontal shafts, but can also be used on vertical shafts in grease lubricated applications.

HS6 seals (→ **fig. 52**) are designed with a spring-loaded sealing lip and an SKF Springlock (→ **fig. 56** on **page 212**). They feature a separate loose spring and a hook-and-eye spring connection for shaft diameters above 455 mm *(18 in.)* unless otherwise specified (→ **fig. 54b** on **page 211**). Other sizes of HS6 seals come with a threaded spring connection. For a proper fit in the housing bore, a cover plate is required (→ **figs. 25** and **26**, on **pages 82** and **83**).

HS7 seals (→ **fig. 53**), designed for grease lubricated applications only, have a spring-loaded sealing lip and are designed with both an SKF Springlock and SKF Springcover (→ **figs. 56** and **57** on **page 212**). All HS7 seals feature a control-wire spring connection (→ **fig. 54c** on **page 211**). The spring is completely enclosed and the connection is made by running the control wire into the centre of the spring coil across the split (butt joint). A built-in spring tension holds the sealing lip on the shaft. For a proper fit, a cover plate is required. Due to the unique design that enables easier installation, a gap may occur at the joint even after the cover plate is installed. It is necessary that the split be placed at the 12 o'clock position during installation. HS7 seals do not have the high-performance characteristics of other HS seals, but are the easiest to install.

HS8 seals (→ **fig. 53**) are designed with a spring-loaded sealing lip, SKF Springlock, SKF Springcover (→ **figs. 56** and **57** on **page 212**) and a hook-and-eye spring connection (→ **fig. 54b** on **page 211**) for shaft diameters above 455 mm *(18 in.)*. Other sizes of HS8 seals come with a threaded spring connection. The spring is entirely enclosed except for a small portion on either side of the split. HS8 seals provide the most effective sealing performance of all split HS seals and are the preferred design for retaining low-viscosity lubricants and for water exclusion. HS8 seals perform best on horizontal shafts, but can also be used on vertical shafts provided they are not flooded with lubricant. For a proper fit, a cover plate is required.

Fig. 52

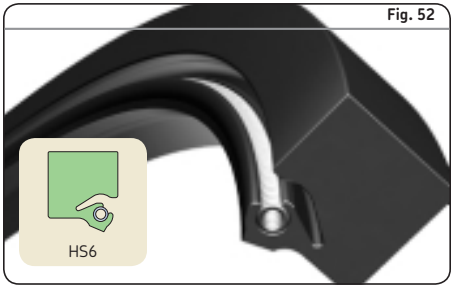

Fig. 53

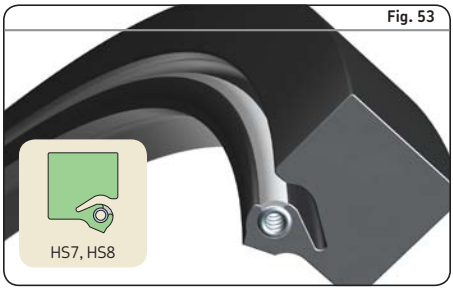

Reinforced all-rubber HSS seals

SKF also offers a range of reinforced all-rubber seals in nitrile rubber (NBR), SKF Duratemp (HNBR) and SKF Duralife (FKM). The standard grade of the material is used for the sealing lip, while the part of the seal body contacting the housing bore is made from a harder grade to provide improved stability in operation and during installation. For further information, refer to publication *Reinforced all-rubber HSS seals*.

Additional design features

Spring connections

There are different ways to connect the stainless steel garter springs of HS and HSF seals. A threaded spring connection (→ **fig. 54a**) is used for all HSF seals unless otherwise specified and for the solid HS4 and HS5 seals as well as the split HS6 and HS8 seals for shaft diameters ≤ 455 mm *(18 in.)*. A hook-and-eye spring connection (→ **fig. 54b**) is used for HS6 and HS8 seals for shaft diameters > 455 mm *(18 in.)*. All HS7 seals feature the special control-wire connection (→ **fig. 54c**), available only for these seals.

Spacer lugs

Spacer lugs are available for all metal-cased designs to separate seals in tandem or back-to-back arrangements to provide space for sealing lip lubrication (→ **fig. 55**).

Traditional fixed-width lugs for metal-cased HDS seals are 9,5 mm *(0.375 in.)* in diameter and are available in widths from 3,2 mm *(0.125 in.)* to 12,7 mm *(0.5 in.)* in increments of 1,6 mm *(0.063 in.)*. The fixed-width lug is an available option for all metal-cased seals.

All standard adjustable lugs are 9,5 mm *(0.375 in.)* in diameter and 9,5 mm *(0.375 in.)* in width. They can be adjusted to smaller widths in 1,6 mm *(0.063 in.)* increments by removing the steel washers. The lugs may also be removed entirely. Longer, adjustable lugs, with a width of 12,7 mm *(0.5 in.)*, are available on request, however, it can be more difficult to reduce their width.

Certain small seal cross sections may require special small diameter lugs, 5,3 mm *(0.210 in.)*, with a width range of 1,6 to 3,2 mm *(0.063 to 0.125 in.)*.

The lugs are placed around the heel of the seal in four, six or eight equally spaced locations, depending on the seal outside diameter (→ **table 17**).

Fixed-width lugs are available for HDL seals on request.

Fig. 54

Spring connections

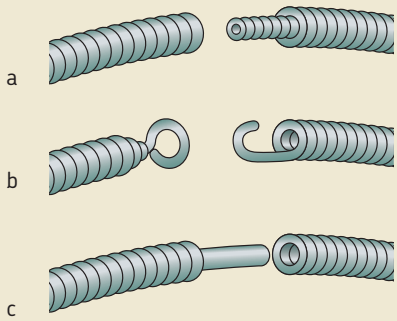

Fig. 55

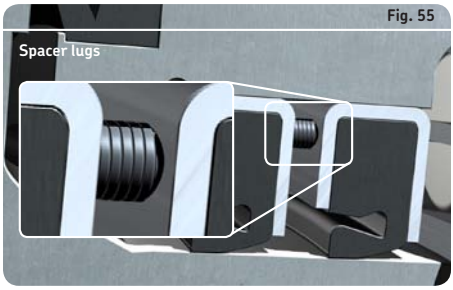

Table 17

Number of spacer lugs needed

Spacer lugs	Housing bore diameter			
	from	incl.	from	incl.
–	mm		*in.*	
4		762		*30*
6	762	1 143	*30*	*45*
8	1 143		*45*	

SKF Springlock

The SKF Springlock is a sealing lip feature that surrounds 270° of the garter spring diameter (→ **fig. 56**). It helps hold the spring in position during installation and is standard on all HS seals and spring-loaded, metal-cased HDS seals.

SKF Springcover

For blind installations, where spring displacement may go undetected, the SKF Springcover (→ **fig. 57**) can be specified. It also protects the spring from dirt, water and other contaminants. SKF Springcover is flexible and covers the exposed portion of the stainless steel garter spring without adversely affecting the spring's capability.

Fig. 56

SKF Springlock



Fig. 57

SKF Springcover



Table 18

Seals for heavy industrial applications, selection guide per application

Application	General machinery Industrial gearboxes	Rolling mills, metals Hot strip mills Cold rolled plate mills Industrial gearboxes	Industrial gearboxes General machinery Rolling mills, paper mills	Special machinery Crushers, shredders, bailers, etc.
Type	**General purpose**	**Water/scale exclusion**	**High speed**	**High Dynamic Runout (DRO) or Shaft-To-Bore Misalignment (STBM)**
HDS1-2, HDSD-E	3	2	1	2
HDS4, 6	3	2	3	2
HDS7	2	3	1	2
HDSA-B	3	2	1	2
HDL	2	2	3	3
HS4-8	2	1	1	2
SBF, HSF1-9	3	2	1	2

1 = Good solution 2 = Better solution 3 = Best solution

Table 19

Standard sections for metal-cased HDS seal designs

Designs with metal outside diameter	Shaft diameter		Bore diameter		Nominal seal width		Difference between bore and shaft diameter	
	from	to	from	to	from	to	from	to
–	mm/*in.*		mm/*in.*		mm/*in.*		mm/*in.*	
HDS7	165,10 *6.500*	1 606,55 *63.250*	196,85 *7.750*	1 638,30 *64.500*	15,88 *0.625*	31,75 *1.250*	31,75 *1.250*	63,50 *2.500*
HDSH7	165,10 *6.500*	1 606,55 *63.250*	196,85 *7.750*	1 638,30 *64.500*	19,99 *0.787*	31,75 *1.250*	31,75 *1.250*	63,50 *2.500*
HDS1–3, HDSF1–3	165,10 *6.500*	1 606,55 *63.250*	196,85 *7.750*	1 638,30 *64.500*	15,88 *0.625*	31,75 *1.250*	31,75 *1.250*	76,20 *3.000*
HDSH1-3	165,10 *6.500*	1 606,55 *63.250*	196,85 *7.750*	1 638,30 *64.500*	19,99 *0.787*	31,75 *1.250*	31,75 *1.250*	76,20 *3.000*
HDSA1–2, HDSB1–2	165,10 *6.500*	1 189,74 *46.840*	196,85 *7.750*	1 219,20 *48.000*	21,36 *0.841*	38,10 *1.500*	31,75 *1.250*	76,20 *3.000*
HDSD1–2, HDSE1–2, HDSEF1–2	165,10 *6.500*	1 603,50 *63.130*	202,18 *7.960*	1 638,30 *64.500*	30,89 *1.216*	50,80 *2.000*	37,08 *1.460*	76,20 *3.000*
HDSEH1–2	165,10 *6.500*	1 603,50 *63.130*	202,18 *7.960*	1 638,30 *64.500*	39,98 *1.574*	50,80 *2.000*	37,08 *1.460*	76,20 *3.000*

Designs with an elastomer applied to the outside diameter	Shaft diameter		Bore diameter		Nominal seal width		Difference between bore and shaft diameter	
	from	to	from	to	from	to	from	to
–	mm/*in.*		mm/*in.*		mm/*in.*		mm/*in.*	
HDS7K	165,10 *6.500*	1 606,55 *63.250*	201,62 *7.938*	1 643,08 *64.688*	15,88 *0.625*	31,75 *1.250*	36,52 *1.438*	76,20 *3.000*
HDSH7K	165,10 *6.500*	1 606,55 *63.250*	201,62 *7.938*	1 643,08 *64.688*	19,99 *0.787*	31,75 *1.250*	36,52 *1.438*	76,20 *3.000*
HDS1–3K, HDSF1–3K	165,10 *6.500*	1 606,55 *63.250*	201,62 *7.938*	1 643,08 *64.688*	15,88 *0.625*	31,75 *1.250*	36,52 *1.438*	76,20 *3.000*
HDSH1–3K	165,10 *6.500*	1 606,55 *63.250*	201,62 *7.938*	1 643,08 *64.688*	19,99 *0.787*	31,75 *1.250*	36,52 *1.438*	76,20 *3.000*
HDSA1–2K, HDSB1–2K	165,10 *6.500*	1 606,55 *63.250*	201,62 *7.938*	1 643,08 *64.688*	15,88 *0.841*	31,75 *1.250*	36,52 *1.438*	76,20 *3.000*

Not all cross sections and widths are possible with every shaft diameter. Contact SKF for information on dimensions at the extreme limits or for sizes outside the standard range.

Size options of metal-cased HDS seals and all-rubber HS seals

All SKF metal-cased HDS seals and all-rubber HS seals are made upon order in any inch or metric size within the ranges listed in **tables 19** and **20**. Since new sizes are manufactured without additional tooling, they can be supplied without extended lead times. The product tables starting on **page 216** and **302**, respectively, list a selection of sizes. For any size that is not listed in the product tables, contact your SKF distributor or SKF sales representative.

Table 20

Standard size options of HS seals

Shaft diameter[1]		Bore diameter[2]		Bore depth[3]		Difference between bore and shaft diameter	
from	to	from	to	from	to	from	to
mm/*in.*		mm/*in.*		mm/*in.*		mm/*in.*	
165,10 *6.500*	4 572,00 *180.000*	190,50 *7.500*	4 597,40 *181.000*	12,70 *0.500*		25,40 *1.000*	
165,10 *6.500*	4 572,00 *180.000*	195,10 *7.681*	4 602,00 *181.181*	12,70 *0.500*	19,99 *0.787*	30,00 *1.181*	50,80 *2.000*
330,20 *13.000*	4 572,00 *180.000*	368,30 *14.500*	4 610,10 *181.500*	16,51 *0.650*	25,40 *1.000*	38,10 *1.500*	63,50 *2.500*

[1] Tolerance h11
[2] Tolerance H8
[3] Tolerance ±0,13 mm *(0.005 in.)*
Not all cross sections and widths are possible with every shaft diameter. Contact SKF for information on dimensions at the extreme limits or on sizes outside the standard range.

Radial shaft seals – HDS7 – metric dimensions
d_1 **200 – 1 250** mm

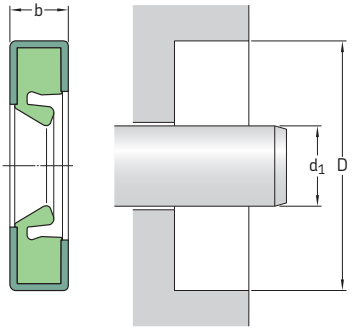

The table includes only a selection of sizes. For the full size range, please refer to **table 19** on **page 214**.

Please see **pages 74** to **76** for housing bore requirements.

Dimensions Shaft d_1	Bore D	Nominal seal width b	**Design**	**Lip material**	**Designation**
mm			–	–	–
200	230	15	HDS7	R	**200×230×15 HDS7 R**
210	240	18	HDS7	D	**210×240×18 HDS7 D**[1]
220	250	15	HDS7	R	**220×250×15 HDS7 R**
230	260	15	HDS7	R	**230×260×15 HDS7 R**
235	270	15	HDS7	H	**235×270×15 HDS7 H**
	270	16	HDS7	H	**235×270×16 HDS7 H**
260	300	16	HDS7	R	**260×300×16 HDS7 R**
290	350	25	HDS7	R	**290×350×25 HDS7 R**
300	340	18	HDS7	R	**300×340×18 HDS7 R**
	340	20	HDS7	R	**300×340×20 HDS7 R**
	344	20	HDS7	R	**300×344×20 HDS7 R**
310	350	20	HDS7	R	**310×350×20 HDS7 R**
320	380	28	HDS7	R	**320×380×28 HDS7 R**
330	370	20	HDS7	R	**330×370×20 HDS7 R**
346	375	15	HDS7	R	**346×375×15 HDS7 R**
360	404	20	HDS7	R	**360×404×20 HDS7 R**
364	406	17	HDS7	D	**364×406×17 HDS7 D**
400	444	20	HDS7	R	**400×444×20 HDS7 R**
432	463	17	HDS7	R	**432×463×17 HDS7 R**
440	480	20	HDS7	R	**440×480×20 HDS7 R**
450	510	25	HDS7	R	**450×510×25 HDS7 R**

[1] 12,7 mm adjustable spacer lugs (4)

Dimensions Shaft d_1	Bore D	Nominal seal width b	Design	Lip material	Designation
mm			–	–	–
461	495	20	HDS7	H	**461×495×20 HDS7 H**
470	530	25	HDS7	R	**470×530×25 HDS7 R**
	530	28	HDS7	R	**470×530×28 HDS7 R**
500	550	20	HDS7	D	**500×550×20 HDS7 D**[2]
515	555	20	HDS7	R	**515×555×20 HDS7 R**
520	570	22	HDS7	R	**520×570×22 HDS7 R**
530	580	20	HDS7	D	**530×580×20 HDS7 D**[2]
	580	22	HDS7	R	**530×580×22 HDS7 R**
542	578	16	HDS7	D	**542×578×16 HDS7 D**[1]
560	604	20	HDS7	R	**560×604×20 HDS7 R**
	610	20	HDS7	R	**560×610×20 HDS7 R**
	610	22	HDS7	R	**560×610×22 HDS7 R**
	620	29,34	HDS7	R	**560×620×29 HDS7 R**
590	630	20	HDS7	D	**590×630×20 HDS7 D**[2]
	640	20	HDS7	R	**590×640×20 HDS7 R**
610	660	25	HDS7	R	**610×660×25 HDS7 R**
640	690	25	HDS7	R	**640×690×25 HDS7 R**
647	700	25	HDS7	H	**647×700×25 HDS7 H**
720	784	23	HDS7	R	**720×784×23 HDS7 R**
760	810	25	HDS7	R	**760×810×25 HDS7 R**
1 250	1 314	21,54	HDS7	R	**1250×1314×22 HDS7 R**

[1] 12,7 mm adjustable spacer lugs (4)
[2] 12,7 mm adjustable spacer lugs (6)

Radial shaft seals – HDS7 – inch dimensions
d_1 **6.750 – 15.359** in.

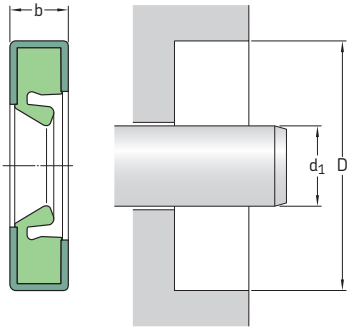

The table includes only a selection of sizes. For the full size range, please refer to **table 19** on **page 214**.

Please see **pages 74** to **76** for housing bore requirements.

Dimensions Shaft d_1	Bore D	Nominal seal width b	**Design**	**Lip material**	**Designation**
in./*mm*			–	–	–
6.750 *171,45*	8.000 *203,20*	0.750 *19,05*	HDS7	R	**597627**
8.000 *203,20*	9.500 *241,30*	0.625 *15,88*	HDS7	H	**596567**
8.375 *212,73*	9.750 *247,65*	0.750 *19,05*	HDS7	R	**596198**
8.500 *215,90*	10.000 *254,00*	0.625 *15,88*	HDS7	R	**596415**
9.000 *228,60*	10.498 *266,65*	0.750 *19,05*	HDS7	R	**596200**
	10.500 *266,70*	0.625 *15,88*	HDS7	R	**597535**
9.125 *231,78*	11.125 *282,58*	0.813 *20,65*	HDS7	R	**597472**
9.375 *238,13*	11.500 *292,10*	0.590 *14,99*	HDS7	R	**597408**
9.500 *241,30*	11.000 *279,40*	0.625 *15,88*	HDS7	H	**596566**
9.750 *247,65*	11.000 *279,40*	0.625 *15,88*	HDS7	R	**596561**
10.000 *254,00*	11.250 *285,75*	0.625 *15,88*	HDS7	R	**1000129**
10.500 *266,70*	12.000 *304,80*	0.688 *17,48*	HDS7	H	**1050211**
10.750 *273,05*	11.750 *298,45*	0.591 *15,01*	HDS7	R	**1075020**
	12.750 *323,85*	0.625 *15,88*	HDS7	R	**596171**
	12.750 *323,85*	0.813 *20,65*	HDS7	R	**1075559**

Dimensions Shaft d_1	Bore D	Nominal seal width b	Design	Lip material	Designation
in./*mm*			–	–	–
11.000 *279,40*	12.250 *311,15*	0.625 *15,88*	HDS7	R	**1100120**
	13.000 *330,20*	0.813 *20,65*	HDS7	R	**1100519**
11.250 *285,75*	12.750 *323,85*	0.625 *15,88*	HDS7	H	**1125219**
11.500 *292,10*	13.000 *330,20*	0.688 *17,48*	HDS7	R	**1150229**
11.750 *298,45*	13.250 *336,55*	0.688 *17,48*	HDS7	R	**1175219**
12.000 *304,80*	13.500 *342,90*	0.625 *15,88*	HDS7	R	**1213210**
	13.938 *354,03*	0.688 *17,48*	HDS7	R	**1200500**
	14.000 *355,60*	0.813 *20,65*	HDS7	R	**1200521**
12.250 *311,15*	13.750 *349,25*	0.750 *19,05*	HDS7	D	**1225259**
	14.000 *355,60*	0.688 *17,48*	HDS7	R	**1225379**
	14.250 *361,95*	0.750 *19,05*	HDS7	R	**1225549**
	14.250 *361,95*	0.813 *20,65*	HDS7	R	**1225370**
	14.250 *361,95*	1.250 *31,75*	HDS7	R	**1225589**
12.500 *317,50*	14.000 *355,60*	0.688 *17,48*	HDS7	R	**1250239**
12.750 *323,85*	14.250 *361,95*	0.625 *15,88*	HDS7	H	**1275219**
13.000 *330,20*	15.000 *381,00*	1.000 *25,40*	HDS7	R	**1300600**
13.250 *336,55*	15.250 *387,35*	0.750 *19,05*	HDS7	R	**1325569**
13.500 *342,90*	15.500 *393,70*	0.813 *20,65*	HDS7	R	**1350520**
13.750 *349,25*	15.250 *387,35*	0.625 *15,88*	HDS7	H	**1375719**
13.875 *352,43*	16.000 *406,40*	1.000 *25,40*	HDS7	R	**1387610**
14.500 *368,30*	16.000 *406,40*	0.688 *17,48*	HDS7	R	**1450220**
14.750 *374,65*	16.500 *419,10*	0.688 *17,48*	HDS7	R	**1475430**
15.000 *381,00*	17.000 *431,80*	0.813 *20,65*	HDS7	R	**1500510**
15.250 *387,35*	17.250 *438,15*	0.625 *15,88*	HDS7	R	**1525511**
15.359 *390,12*	17.709 *449,81*	0.906 *23,01*	HDS7	R	**1536691**

Radial shaft seals – HDS7 – inch dimensions
d_1 **15.500 – 63.250** in.

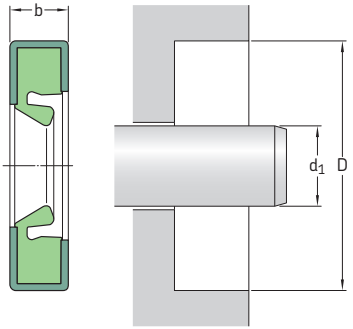

The table includes only a selection of sizes. For the full size range, please refer to **table 19** on **page 214**.

Please see **pages 74** to **76** for housing bore requirements.

Dimensions Shaft d_1	Bore D	Nominal seal width b	**Design**	**Lip material**	**Designation**
in./*mm*			–	–	–
15.500	17.500	0.813	HDS7	R	**1550559**
393,70	*444,50*	*20,65*			
15.750	17.250	0.750	HDS7	H	**1575210**
400,05	*438,15*	*19,05*			
15.875	17.500	0.750	HDS7	H	**1587330**
403,23	*444,50*	*19,05*			
16.000	17.500	0.625	HDS7	H	**1600211**
406,40	*444,50*	*15,88*			
	18.000	0.813	HDS7	H	**1600519**
	457,20	*20,65*			
16.250	17.750	0.688	HDS7	R	**1625210**
412,75	*450,85*	*17,48*			
16.500	18.000	0.750	HDS7	R	**1650280**
419,10	*457,20*	*19,05*			
17.000	18.500	0.625	HDS7	R	**1700280**
431,80	*469,90*	*15,88*			
	19.000	0.813	HDS7	R	**1700579**
	482,60	*20,65*			
17.375	18.875	0.750	HDS7	R	**1737219**
441,33	*479,43*	*19,05*			
17.500	19.000	0.688	HDS7	H	**1750220**
444,50	*482,60*	*17,48*			
	19.000	0.688	HDS7	R	**1750221**
	482,60	*17,48*			
17.875	19.875	0.750	HDS7	R	**1787540**
454,03	*504,83*	*19,05*			
19.000	20.500	0.750	HDS7	R	**1900211**
482,60	*520,70*	*19,05*			
19.250	20.750	0.625	HDS7	R	**596180**
488,95	*527,05*	*15,88*			

Dimensions Shaft d_1	Bore D	Nominal seal width b	Design	Lip material	Designation
in./*mm*			–	–	–
19.500 *495,30*	21.500 *546,10*	0.750 *19,05*	HDS7	R	**1950211**
20.000 *508,00*	21.500 *546,10*	0.750 *19,05*	HDS7	R	**2000240**
20.750 *527,05*	22.750 *577,85*	0.875 *22,23*	HDS7	D	**2075569**
21.260 *540,00*	23.228 *590,00*	0.984 *25,00*	HDS7	R	**2126510**
21.750 *552,45*	23.750 *603,25*	0.875 *22,23*	HDS7	R	**2175569**
22.250 *565,15*	24.250 *615,95*	0.875 *22,23*	HDS7	H	**2225511**
24.250 *615,95*	26.000 *660,40*	1.000 *25,40*	HDS7	H	**2425419**
25.000 *635,00*	26.500 *673,10*	0.750 *19,05*	HDS7	R	**2500210**
26.500 *673,10*	28.000 *711,20*	0.750 *19,05*	HDS7	R	**2650240**
27.000 *685,80*	29.000 *736,60*	0.875 *22,23*	HDS7	R	**2700519**
27.500 *698,50*	29.500 *749,30*	0.875 *22,23*	HDS7	R	**2750510**
27.875 *708,03*	29.815 *757,30*	0.875 *22,23*	HDS7	R	**2788600**
28.000 *711,20*	29.500 *749,30*	0.750 *19,05*	HDS7	R	**2800240**
	30.000 *762,00*	0.875 *22,23*	HDS7	R	**2800590**
	30.500 *774,70*	1.000 *25,40*	HDS7	H	**2800650**
28.500 *723,90*	30.500 *774,70*	0.875 *22,23*	HDS7	H	**2850211**
29.000 *736,60*	31.000 *787,40*	0.875 *22,23*	HDS7	R	**2900579**
30.500 *774,70*	32.500 *825,50*	0.875 *22,23*	HDS7	H	**3050511**
30.615 *777,62*	33.268 *845,01*	1.094 *27,79*	HDS7	R	**3061721**
31.496 *800,00*	33.465 *850,01*	0.984 *24,99*	HDS7	R	**3149470**
40.500 *1 028,70*	41.750 *1 060,45*	0.750 *19,05*	HDS7	H	**4050061**
47.000 *1 193,80*	49.000 *1 244,60*	0.875 *22,23*	HDS7	H	**4700511**
57.875 *1 470,03*	60.000 *1 524,00*	0.938 *23,83*	HDS7	R	**5787611**
63.250 *1 606,55*	64.500 *1 638,30*	1.188 *31,75*	HDS7	R	**6325100**

Radial shaft seals – HDS7K – metric dimensions
d_1 **200 – 810** mm

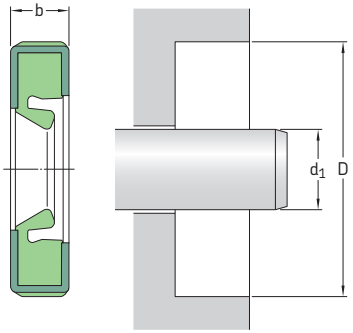

The table includes only a selection of sizes. For the full size range, please refer to **table 19** on **page 214**.

Please see **pages 74** to **76** for housing bore requirements.

Dimensions Shaft d_1	Bore D	Nominal seal width b	**Design**	**Lip material**	**Designation**
mm			–	–	–
200	230	15	HDS7K	R	**200×230×15 HDS7K R**
230	260	15	HDS7K	R	**230×260×15 HDS7K R**
280	310	15	HDS7K	R	**280×310×15 HDS7K R**
	320	18	HDS7K	R	**280×320×18 HDS7K R**[1]
	320	20	HDS7K	R	**280×320×20 HDS7K R**
310	350	20	HDS7K	R	**310×350×20 HDS7K R**
320	360	25	HDS7K	R	**320×360×25 HDS7K R**[2]
360	404	20	HDS7K	R	**360×404×20 HDS7K R**
400	450	18	HDS7K	R	**400×450×18 HDS7K R**
	450	22	HDS7K	R	**400×450×22 HDS7K R**
446	496	22	HDS7K	R	**446×496×22 HDS7K R**
450	500	18	HDS7K	R	**450×500×18 HDS7K R**
	500	22	HDS7K	R	**450×500×22 HDS7K R**
485	535	22	HDS7K	R	**485×535×22 HDS7K R**
520	570	18	HDS7K	H	**520×570×18 HDS7K H**
	570	18	HDS7K	H	**520×570×18 HDS7K H**[3]
530	580	22	HDS7K	R	**530×580×22 HDS7K R**
	580	20	HDS7K	R	**530×580×20 HDS7K R**[1]
540	590	18	HDS7K	R	**540×590×18 HDS7K R**
560	610	20	HDS7K	R	**560×610×20 HDS7K R**[1]

[1] 3,18 mm lugs (4)
[2] 4,77 mm lugs (4)
[3] 7,95 mm lugs (6)

Dimensions			Design	Lip material	Designation
Shaft	Bore	Nominal seal width			
d_1	D	b			
mm			–	–	–
570	610	18	HDS7K	H	**570×610×18 HDS7K H**
	610	18	HDS7K	H	**570×610×18 HDS7K H**[4]
	620	22	HDS7K	R	**570×620×22 HDS7K R**
760	824	25	HDS7K	R	**760×824×25 HDS7K R**
810	874	25	HDS7K	R	**810×874×25 HDS7K R**

[4] 1,60 mm lugs (6)

Radial shaft seals – HDS7K – inch dimensions
d_1 **15.750 – 16.500** in.

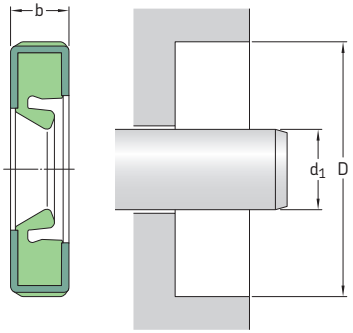

The table includes only a selection of sizes. For the full size range, please refer to **table 19** on **page 214**.

Please see **pages 74** to **76** for housing bore requirements.

Dimensions Shaft d_1	Bore D	Nominal seal width b	**Design**	**Lip material**	**Designation**
in./*mm*			–	–	–
15.750 *400,05*	17.250 *438,15*	0.688 *17,48*	HDS7K	R	**1575241**
16.000 *406,40*	18.000 *457,20*	0.807 *20,50*	HDS7K	R	**1600562**
16.500 *419,10*	18.000 *457,20*	0.750 *19,05*	HDS7K	R	**1650248**

Radial shaft seals – HDL – metric dimensions
d_1 **200 – 1 380** mm

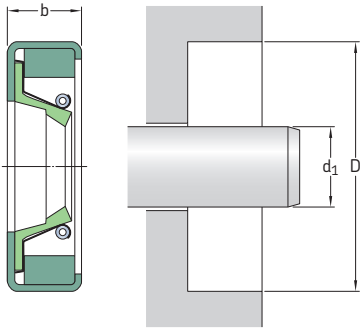

The table includes only a selection of available sizes. Contact your SKF sales representative for more information.

Please see **pages 74** to **76** for housing bore requirements.

Dimensions Shaft	Bore	Nominal seal width	**Designations** Lip material	
d_1	D	b	R	V
mm			–	
200	240	20	**200×240×20 HDL R**	**200×240×20 HDL V**
220	250	18	**220×250×18 HDL R**	**220×250×18 HDL V**
232	269,87	17,45	**232×270×17 HDL R**	**232×270×17 HDL V**
240	270	15	**240×270×15 HDL R**	**240×270×15 HDL V**
	280	20	**240×280×20 HDL R**	**240×280×20 HDL V**
270	308	17,45	**270×308×17 HDL R**	**270×308×17 HDL V**
280	320	19,98	**280×320×20 HDL R**	**280×320×20 HDL V**
	340	20,62	**280×340×21 HDL R**	**280×340×21 HDL V**
330	370	18	**330×370×18 HDL R**	**330×370×18 HDL V**
360	404	17,45	**360×404×17 HDL R**	**360×404×17 HDL V**
390	430	16	**390×430×16 HDL R**	**390×430×16 HDL V**
400	440	20	**400×440×20 HDL R**	**400×440×20 HDL V**
	450	17,45	**400×450×17 HDL R**	**400×450×17 HDL V**
420	460	17,45	**420×460×17 HDL R**	**420×460×17 HDL V**
	460	20	**420×460×20 HDL R**	**420×460×20 HDL V**
	470	17,45	**420×470×17 HDL R**	**420×470×17 HDL V**
440	480	20	**440×480×20 HDL R**	**440×480×20 HDL V**
470	520	22	**470×520×22 HDL R**	**470×520×22 HDL V**
480	520	20	**480×520×20 HDL R**	**480×520×20 HDL V**
485	535	19	**485×535×19 HDL R**	**485×535×19 HDL V**
500	550	19	**500×550×19 HDL R**	**500×550×19 HDL V**
508	560	25	**508×560×25 HDL R**	**508×560×25 HDL V**
513	543	16	**513×543×16 HDL R**	**513×543×16 HDL V**

Dimensions			Designation	
Shaft	Bore	Nominal seal width	Lip material	
d_1	D	b	R	V
mm			–	
520	560	18	**520×560×18 HDL R**	**520×560×18 HDL V**
	570	22	**520×570×22 HDL R**	**520×570×22 HDL V**
530	580	20,62	**530×580×21 HDL R**	**530×580×21 HDL V**
540	590	24,98	**540×590×25 HDL R**	**540×590×25 HDL V**
560	610	20	**560×610×20 HDL R**	**560×610×20 HDL V**
565	601	20	**565×601×20 HDL R**	**565×601×20 HDL V**
600	640	20	**600×640×20 HDL R**	**600×640×20 HDL V**
630	670	20	**630×670×20 HDL R**	**630×670×20 HDL V**
640	680	20	**640×680×20 HDL R**	**640×680×20 HDL V**
650	714	25	**650×714×25 HDL R**	**650×714×25 HDL V**
668	706	25,40	**668×706×25 HDL R**	**668×706×25 HDL V**
750	814	25	**750×814×25 HDL R**	**750×814×25 HDL V**
760	804	18	**760×804×18 HDL R**	**760×804×18 HDL V**
780	844	25	**780×844×25 HDL R**	**780×844×25 HDL V**
790	854	25	**790×854×25 HDL R**	**790×854×25 HDL V**
837	889	22,22	**837×889×22 HDL R**	**837×889×22 HDL V**
838,10	881	20	**838×881×20 HDL R**	**838×881×20 HDL V**
840	904	25	**840×904×25 HDL R**	**840×904×25 HDL V**
920	958,01	19,05	**920×958×19 HDL R**	**920×958×19 HDL V**
930	980	22,22	**930×980×22 HDL R**	**930×980×22 HDL V**
990	1 040	25	**990×1040×25 HDL R**	**990×1040×25 HDL V**
1 000	1 050	22,22	**1000×1050×22 HDL R**	**1000×1050×22 HDL V**
1 055	1 100	25	**1055×1100×25 HDL R**	**1055×1100×25 HDL V**
1 105	1 160	22	**1105×1160×22 HDL R**	**1105×1160×22 HDL V**
1 350	1 414	22	**1350×1414×22 HDL R**	**1350×1414×22 HDL V**
	1 415	25	**1350×1415×25 HDL R**	**1350×1415×25 HDL V**
1 380	1 440	25	**1380×1440×25 HDL R**	**1380×1440×25 HDL V**

Radial shaft seals – HDL – inch dimensions
d_1 **6.125 – 11.750** in.

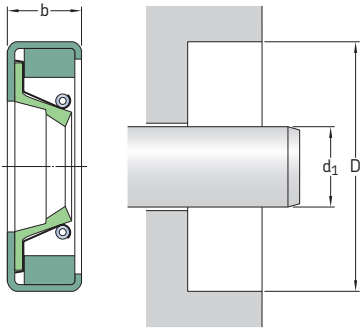

The table includes only a selection of available sizes. Contact your SKF sales representative for more information.

Please see **pages 74** to **76** for housing bore requirements.

Dimensions Shaft d_1	Bore D	Nominal seal width b	**Designations** Lip material R	V
in./*mm*			–	
6.125	7.625	0.687	**HDL 1299 R**	**HDL 1299 V**
155,58	*193,68*	*17,45*		
7.125	8.250	0.750	**HDL 3011 R**	**HDL 3011 V**
180,98	*209,55*	*19,05*		
7.875	9.375	0.687	**HDL 9176 R**	**HDL 9176 V**
200,03	*238,13*	*17,45*		
8.000	9.500	0.687	**HDL 3921 R**	**HDL 3921 V**
203,20	*241,30*	*17,45*		
8.125	10.125	0.687	**HDL 9712 R**	**HDL 9712 V**
206,38	*257,18*	*17,45*		
8.250	10.250	0.813	**HDL 4499 R**	**HDL 4499 V**
209,55	*260,35*	*20,65*		
8.375	9.875	0.687	**HDL 3933 R**	**HDL 3933 V**
212,73	*250,83*	*17,45*		
	10.375	0.813	**HDL 4500 R**	**HDL 4500 V**
	263,53	*20,65*		
8.500	9.750	0.562	**HDL 1705 R**	**HDL 1705 V**
215,90	*247,65*	*14,28*		
	10.000	0.687	**HDL 8453 R**	**HDL 8453 V**
	254,00	*17,45*		
8.625	10.125	0.687	**HDL 3939 R**	**HDL 3939 V**
219,08	*257,18*	*17,45*		
	10.750	0.813	**HDL 7718 R**	**HDL 7718 V**
	273,05	*20,65*		
8.750	10.250	0.687	**HDL 3946 R**	**HDL 3946 V**
222,25	*260,35*	*17,45*		
	10.750	0.813	**HDL 3952 R**	**HDL 3952 V**
	273,05	*20,65*		
8.875	10.875	0.813	**HDL 3953 R**	**HDL 3953 V**
225,43	*276,23*	*20,65*		

Dimensions			Designations	
Shaft	Bore	Nominal seal width	Lip material	
d_1	D	b	R	V
in./*mm*			–	
9.000 *228,60*	10.500 *266,70*	0.688 *17,45*	**HDL 3954 R**	**HDL 3954 V**
9.125 *231,78*	10.625 *269,88*	0.687 *17,45*	**HDL 3957 R**	**HDL 3957 V**
9.250 *234,95*	10.750 *273,05*	0.687 *17,45*	**HDL 3963 R**	**HDL 3963 V**
9.375 *238,13*	11.375 *288,93*	0.813 *20,65*	**HDL 4610 R**	**HDL 4610 V**
9.500 *241,30*	10.750 *273,05*	0.562 *14,28*	**HDL 3145 R**	**HDL 3145 V**
	11.500 *292,10*	0.813 *20,65*	**HDL 3984 R**	**HDL 3984 V**
9.750 *247,65*	11.125 *282,58*	0.562 *14,28*	**HDL 1692 R**	**HDL 1692 V**
	11.750 *298,45*	0.687 *17,45*	**HDL 9425 R**	**HDL 9425 V**
10.000 *254,00*	11.500 *292,10*	0.687 *17,45*	**HDL 3992 R**	**HDL 3992 V**
	12.000 *304,80*	0.813 *20,65*	**HDL 3997 R**	**HDL 3997 V**
10.125 *257,18*	11.625 *295,28*	0.687 *17,45*	**HDL 3999 R**	**HDL 3999 V**
10.250 *260,35*	11.750 *298,45*	0.687 *17,45*	**HDL 4004 R**	**HDL 4004 V**
10.500 *266,70*	12.000 *304,80*	0.687 *17,45*	**HDL 4011 R**	**HDL 4011 V**
10.750 *273,05*	12.250 *311,15*	0.687 *17,45*	**HDL 4023 R**	**HDL 4023 V**
	12.750 *323,85*	0.625 *15,88*	**HDL 3014 R**	**HDL 3014 V**
10.875 *276,23*	12.375 *314,33*	0.687 *17,45*	**HDL 4027 R**	**HDL 4027 V**
11.000 *279,40*	12.250 *311,15*	0.562 *14,28*	**HDL 3135 R**	**HDL 3135 V**
	13.000 *330,20*	0.688 *17,45*	**HDL 6034 R**	**HDL 6034 V**
11.125 *282,58*	13.000 *330,20*	0.687 *17,45*	**HDL 3699 R**	**HDL 3699 V**
11.250 *285,75*	12.750 *323,85*	0.687 *17,45*	**HDL 4527 R**	**HDL 4527 V**
	13.250 *336,55*	0.813 *20,65*	**HDL 4047 R**	**HDL 4047 V**
11.375 *288,93*	13.375 *339,73*	0.813 *20,65*	**HDL 4052 R**	**HDL 4052 V**
11.500 *292,10*	13.000 *330,20*	0.687 *17,45*	**HDL 4057 R**	**HDL 4057 V**
11.750 *298,45*	13.250 *336,55*	0.687 *17,45*	**HDL 4064 R**	**HDL 4064 V**

Radial shaft seals – HDL – inch dimensions
d_1 **12.000 – 15.125** in.

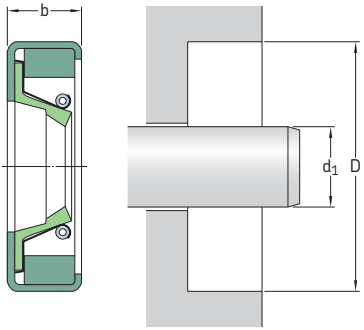

The table includes only a selection of available sizes. Contact your SKF sales representative for more information.

Please see **pages 74** to **76** for housing bore requirements.

Dimensions Shaft d_1	Bore D	Nominal seal width b	**Designations** Lip material R	V
in./*mm*			–	
12.000	13.500	0.687	**HDL 4612 R**	**HDL 4612 V**
304,80	*342,90*	*17,45*		
	13.750	0.687	**HDL 3701 R**	**HDL 3701 V**
	349,25	*17,45*		
12.125	13.875	0.687	**HDL 4053 R**	**HDL 4053 V**
307,98	*352,43*	*17,45*		
12.250	13.750	0.687	**HDL 4613 R**	**HDL 4613 V**
311,15	*349,25*	*17,45*		
	14.000	0.687	**HDL 4055 R**	**HDL 4055 V**
	355,60	*17,45*		
12.375	13.875	0.687	**HDL 4076 R**	**HDL 4076 V**
314,33	*352,43*	*17,45*		
	14.375	0.687	**HDL 4097 R**	**HDL 4097 V**
	365,13	*17,45*		
12.500	14.000	0.687	**HDL 4079 R**	**HDL 4079 V**
317,50	*355,60*	*17,45*		
12.625	14.125	0.687	**HDL 4081 R**	**HDL 4081 V**
320,68	*358,78*	*17,45*		
12.687	14.750	0.813	**HDL 9766 R**	**HDL 9766 V**
322,24	*374,65*	*20,65*		
12.750	14.250	0.687	**HDL 4089 R**	**HDL 4089 V**
323,85	*361,95*	*17,45*		
	15.000	0.813	**HDL 4092 R**	**HDL 4092 V**
	381,00	*20,65*		
12.875	15.000	0.813	**HDL 5404 R**	**HDL 5404 V**
327,03	*381,00*	*20,65*		
13.000	14.500	0.687	**HDL 4093 R**	**HDL 4093 V**
330,20	*368,30*	*17,45*		

Dimensions			Designations	
Shaft	Bore	Nominal seal width	Lip material	
d_1	D	b	R	V
in./*mm*			–	
13.250	14.750	0.687	**HDL 4101 R**	**HDL 4101 V**
336,55	*374,65*	*17,45*		
	15.000	0.687	**HDL 7169 R**	**HDL 7169 V**
	381,00	*17,45*		
13.500	15.000	0.687	**HDL 4121 R**	**HDL 4121 V**
342,90	*381,00*	*17,45*		
	15.750	0.813	**HDL 4123 R**	**HDL 4123 V**
	400,05	*20,65*		
13.625	15.500	0.687	**HDL 4120 R**	**HDL 4120 V**
346,08	*393,70*	*17,45*		
13.750	15.250	0.687	**HDL 4529 R**	**HDL 4529 V**
349,25	*387,35*	*17,45*		
13.813	16.000	0.813	**HDL 4108 R**	**HDL 4108 V**
350,85	*406,40*	*20,65*		
13.875	16.000	0.813	**HDL 4110 R**	**HDL 4110 V**
352,43	*406,40*	*20,65*		
13.937	15.437	0.687	**HDL 4130 R**	**HDL 4130 V**
354,00	*392,10*	*17,45*		
	15.500	0.687	**HDL 4111 R**	**HDL 4111 V**
	393,70	*17,45*		
14.000	15.500	0.687	**HDL 4131 R**	**HDL 4131 V**
355,60	*393,70*	*17,45*		
	15.750	0.750	**HDL 4134 R**	**HDL 4134 V**
	400,05	*19,05*		
14.187	16.732	0.813	**HDL 9280 R**	**HDL 9280 V**
360,34	*424,99*	*20,65*		
14.250	15.750	0.687	**HDL 4118 R**	**HDL 4118 V**
361,95	*400,05*	*17,45*		
14.375	16.000	0.687	**HDL 5481 R**	**HDL 5481 V**
365,13	*406,40*	*17,45*		
14.500	16.000	0.687	**HDL 4142 R**	**HDL 4142 V**
368,30	*406,40*	*17,45*		
14.625	16.250	0.687	**HDL 3856 R**	**HDL 3856 V**
371,48	*412,75*	*17,45*		
14.750	16.250	0.687	**HDL 4147 R**	**HDL 4147 V**
374,65	*412,75*	*17,45*		
	16.500	0.687	**HDL 5990 R**	**HDL 5990 V**
	419,10	*17,45*		
14.875	16.500	0.687	**HDL 3858 R**	**HDL 3858 V**
377,83	*419,10*	*17,45*		
	16.875	0.937	**HDL 2622 R**	**HDL 2622 V**
	428,63	*23,80*		
14.906	17.000	0.813	**HDL 3861 R**	**HDL 3861 V**
378,61	*431,80*	*20,65*		
15.000	16.500	0.687	**HDL 4151 R**	**HDL 4151 V**
381,00	*419,10*	*17,45*		
15.125	16.750	0.687	**HDL 4165 R**	**HDL 4165 V**
384,18	*425,45*	*17,45*		

Radial shaft seals – HDL – inch dimensions
d_1 **15.250 – 19.250** in.

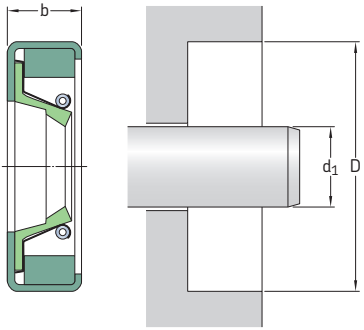

The table includes only a selection of available sizes. Contact your SKF sales representative for more information.

Please see **pages 74** to **76** for housing bore requirements.

Dimensions Shaft d_1	Bore D	Nominal seal width b	**Designations** Lip material R	V
in./*mm*			–	
15.250	16.750	0.687	**HDL 4615 R**	**HDL 4615 V**
387,35	*425,45*	*17,45*		
	17.250	0.875	**HDL 3030 R**	**HDL 3030 V**
	438,15	*22,23*		
15.313	16.875	0.687	**HDL 4158 R**	**HDL 4158 V**
388,95	*428,63*	*17,45*		
15.359	17.717	0.687	**HDL 4166 R**	**HDL 4166 V**
390,11	*450,01*	*17,45*		
15.375	17.250	0.687	**HDL 4167 R**	**HDL 4167 V**
390,53	*438,15*	*17,45*		
15.500	17.496	0.813	**HDL 4163 R**	**HDL 4163 V**
393,70	*444,40*	*20,65*		
15.750	17.165	0.687	**HDL 9986 R**	**HDL 9986 V**
400,05	*436,00*	*17,45*		
	17.312	0.687	**HDL 9271 R**	**HDL 9271 V**
	439,72	*17,45*		
15.875	17.875	0.813	**HDL 4176 R**	**HDL 4176 V**
403,23	*454,03*	*20,65*		
16.000	17.500	0.687	**HDL 4177 R**	**HDL 4177 V**
406,40	*444,50*	*17,45*		
	18.000	0.813	**HDL 4180 R**	**HDL 4180 V**
	457,20	*20,65*		
16.250	17.750	0.687	**HDL 4181 R**	**HDL 4181 V**
412,75	*450,85*	*17,45*		
	18.000	0.750	**HDL 4184 R**	**HDL 4184 V**
	457,20	*19,05*		
16.375	17.875	0.687	**HDL 4179 R**	**HDL 4179 V**
415,93	*454,03*	*17,45*		
16.500	18.000	0.687	**HDL 9863 R**	**HDL 9863 V**
419,10	*457,20*	*17,45*		
	18.500	0.813	**HDL 4186 R**	**HDL 4186 V**
	469,90	*20,65*		

Dimensions			Designations	
Shaft	Bore	Nominal seal width	Lip material	
d_1	D	b	R	V
in./*mm*			–	
16.535 *419,98*	18.504 *470,00*	0.875 *22,23*	**HDL 1929 R**	**HDL 1929 V**
16.750 *425,45*	18.250 *463,55*	0.687 *17,45*	**HDL 3744 R**	**HDL 3744 V**
	19.000 *482,60*	0.813 *20,65*	**HDL 3748 R**	**HDL 3748 V**
16.937 *430,19*	19.291 *489,99*	0.813 *20,65*	**HDL 9695 R**	**HDL 9695 V**
17.000 *431,80*	18.500 *469,90*	0.687 *17,45*	**HDL 4188 R**	**HDL 4188 V**
	19.250 *488,95*	0.813 *20,65*	**HDL 4191 R**	**HDL 4191 V**
17.250 *438,15*	18.750 *476,25*	0.687 *17,45*	**HDL 3751 R**	**HDL 3751 V**
17.500 *444,50*	19.000 *482,60*	0.687 *17,45*	**HDL 4194 R**	**HDL 4194 V**
	19.250 *488,95*	1.000 *25,40*	**HDL 3005 R**	**HDL 3005 V**
17.625 *447,68*	19.250 *488,95*	0.687 *17,45*	**HDL 4199 R**	**HDL 4199 V**
	19.625 *498,48*	0.687 *17,45*	**HDL 6850 R**	**HDL 6850 V**
17.750 *450,85*	19.750 *501,65*	0.813 *20,65*	**HDL 4200 R**	**HDL 4200 V**
	20.078 *509,98*	0.875 *22,23*	**HDL 9084 R**	**HDL 9084 V**
17.875 *454,03*	19.875 *504,83*	0.813 *20,65*	**HDL 4204 R**	**HDL 4204 V**
18.000 *457,20*	19.500 *495,30*	0.687 *17,45*	**HDL 4206 R**	**HDL 4206 V**
	19.750 *501,65*	0.687 *17,45*	**HDL 5728 R**	**HDL 5728 V**
18.120 *460,25*	20.500 *520,70*	0.875 *22,23*	**HDL 3754 R**	**HDL 3754 V**
18.125 *460,38*	20.500 *520,70*	0.875 *22,23*	**HDL 3756 R**	**HDL 3756 V**
18.250 *463,55*	19.750 *501,65*	0.687 *17,45*	**HDL 3757 R**	**HDL 3757 V**
18.375 *466,73*	19.875 *504,83*	0.687 *17,45*	**HDL 4213 R**	**HDL 4213 V**
	19.937 *506,39*	0.687 *17,45*	**HDL 7103 R**	**HDL 7103 V**
18.500 *469,90*	20.000 *508,00*	0.687 *17,45*	**HDL 3768 R**	**HDL 3768 V**
	20.250 *514,35*	0.687 *17,45*	**HDL 3772 R**	**HDL 3772 V**
19.000 *482,60*	20.500 *520,70*	0.750 *19,05*	**HDL 4218 R**	**HDL 4218 V**
	21.000 *533,40*	0.875 *22,23*	**HDL 4219 R**	**HDL 4219 V**
19.250 *488,95*	20.750 *527,05*	0.750 *19,05*	**HDL 4617 R**	**HDL 4617 V**

Radial shaft seals – HDL – inch dimensions
d_1 **19.375 – 23.375** in.

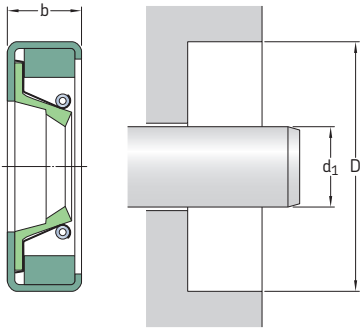

The table includes only a selection of available sizes. Contact your SKF sales representative for more information.

Please see **pages 74** to **76** for housing bore requirements.

Dimensions			**Designations**	
Shaft	Bore	Nominal seal width	Lip material	
d_1	D	b	R	V
in./*mm*			–	
19.375	21.000	0.750	**HDL 3778 R**	**HDL 3778 V**
492,13	*533,40*	*19,05*		
19.500	21.000	0.750	**HDL 3779 R**	**HDL 3779 V**
495,30	*533,40*	*19,05*		
	21.500	0.875	**HDL 4221 R**	**HDL 4221 V**
	546,10	*22,23*		
19.750	21.750	0.875	**HDL 4228 R**	**HDL 4228 V**
501,65	*552,45*	*22,23*		
	22.125	0.875	**HDL 7400 R**	**HDL 7400 V**
	561,98	*22,23*		
19.875	22.000	0.875	**HDL 3788 R**	**HDL 3788 V**
504,83	*558,80*	*22,23*		
19.937	21.687	0.625	**HDL 4233 R**	**HDL 4233 V**
506,40	*550,84*	*15,88*		
	21.500	0.750	**HDL 3789 R**	**HDL 3789 V**
	546,10	*19,05*		
20.000	21.500	0.750	**HDL 4235 R**	**HDL 4235 V**
508,00	*546,10*	*19,05*		
20.143	22.250	0.875	**HDL 3792 R**	**HDL 3792 V**
511,63	*565,15*	*22,23*		
20.250	21.750	0.750	**HDL 4239 R**	**HDL 4239 V**
514,35	*552,45*	*19,05*		
	22.250	0.875	**HDL 4240 R**	**HDL 4240 V**
	565,15	*22,23*		
20.438	22.500	0.813	**HDL 4242 R**	**HDL 4242 V**
519,13	*571,50*	*20,65*		
20.500	22.000	0.750	**HDL 4619 R**	**HDL 4619 V**
520,70	*558,80*	*19,05*		
20.625	22.625	0.813	**HDL 9893 R**	**HDL 9893 V**
523,88	*574,68*	*20,65*		

Dimensions			Designations	
Shaft	Bore	Nominal seal width	Lip material	
d_1	D	b	R	V
in./*mm*			–	
20.750 *527,05*	22.750 *577,85*	0.875 *22,23*	**HDL 4248 R**	**HDL 4248 V**
20.875 *530,23*	22.875 *581,03*	0.875 *22,23*	**HDL 4250 R**	**HDL 4250 V**
21.000 *533,40*	22.500 *571,50* 23.000 *584,20*	0.750 *19,05* 0.813 *20,65*	**HDL 5259 R** **HDL 6535 R**	**HDL 5259 V** **HDL 6535 V**
21.250 *539,75*	23.000 *584,20*	0.750 *19,05*	**HDL 4255 R**	**HDL 4255 V**
21.437 *544,49*	23.187 *588,94*	0.750 *19,05*	**HDL 4256 R**	**HDL 4256 V**
21.500 *546,10*	23.250 *590,55* 23.500 *596,90*	0.750 *19,05* 0.875 *22,23*	**HDL 4257 R** **HDL 4259 R**	**HDL 4257 V** **HDL 4259 V**
21.625 *549,28*	23.375 *593,73*	0.750 *19,05*	**HDL 4261 R**	**HDL 4261 V**
21.750 *552,45*	23.250 *590,55* 24.750 *628,65*	0.750 *19,05* 0.875 *22,23*	**HDL 4621 R** **HDL 4262 R**	**HDL 4621 V** **HDL 4262 V**
22.000 *558,80*	23.500 *596,90* 24.250 *615,95*	0.750 *19,05* 0.813 *20,65*	**HDL 4269 R** **HDL 9082 R**	**HDL 4269 V** **HDL 9082 V**
22.250 *565,15*	24.250 *615,95*	0.875 *22,23*	**HDL 3764 R**	**HDL 3764 V**
22.375 *568,33*	24.250 *615,95* 24.375 *619,13*	0.750 *19,05* 0.875 *22,23*	**HDL 4268 R** **HDL 2576 R**	**HDL 4268 V** **HDL 2576 V**
22.437 *569,89*	24.000 *609,60*	0.750 *19,05*	**HDL 4275 R**	**HDL 4275 V**
22.500 *571,50*	24.000 *609,60* 24.500 *622,30* 24.750 *628,65*	0.750 *19,05* 0.875 *22,23* 0.875 *22,23*	**HDL 4271 R** **HDL 4279 R** **HDL 4273 R**	**HDL 4271 V** **HDL 4279 V** **HDL 4273 V**
22.750 *577,85*	24.750 *628,65*	0.875 *22,23*	**HDL 4281 R**	**HDL 4281 V**
23.000 *584,20*	24.500 *622,30* 24.750 *628,65*	0.750 *19,05* 0.750 *19,05*	**HDL 4283 R** **HDL 5421 R**	**HDL 4283 V** **HDL 5421 V**
23.250 *590,55*	25.000 *635,00* 25.250 *641,35*	0.750 *19,05* 0.750 *19,05*	**HDL 4286 R** **HDL 9371 R**	**HDL 4286 V** **HDL 9371 V**
23.375 *593,73*	25.375 *644,53*	0.875 *22,23*	**HDL 4287 R**	**HDL 4287 V**

Radial shaft seals – HDL – inch dimensions
d_1 **23.500 – 29.500** in.

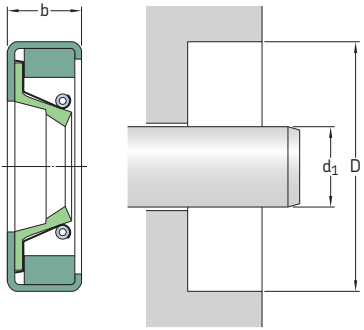

The table includes only a selection of available sizes. Contact your SKF sales representative for more information.

Please see **pages 74** to **76** for housing bore requirements.

Dimensions			**Designations**	
Shaft	Bore	Nominal seal width	Lip material	
d_1	D	b	R	V
in./*mm*			–	
23.500	24.681	0.591	**HDL 3033 R**	**HDL 3033 V**
596,90	*626,90*	*15,00*		
23.562	25.250	0.750	**HDL 4290 R**	**HDL 4290 V**
598,47	*641,35*	*19,05*		
	25.375	0.750	**HDL 4291 R**	**HDL 4291 V**
	644,53	*19,05*		
23.625	26.000	0.875	**HDL 4292 R**	**HDL 4292 V**
600,08	*660,40*	*22,23*		
23.750	25.250	1.000	**HDL 6239 R**	**HDL 6239 V**
603,25	*641,35*	*25,40*		
23.875	26.000	0.875	**HDL 4293 R**	**HDL 4293 V**
606,43	*660,40*	*22,23*		
24.000	25.500	0.750	**HDL 4623 R**	**HDL 4623 V**
609,60	*647,70*	*19,05*		
	26.000	0.813	**HDL 4295 R**	**HDL 4295 V**
	660,40	*20,65*		
24.250	26.250	0.875	**HDL 4301 R**	**HDL 4301 V**
615,95	*666,75*	*22,23*		
24.437	26.000	0.750	**HDL 4302 R**	**HDL 4302 V**
620,69	*660,40*	*19,05*		
	26.935	1.000	**HDL 9990 R**	**HDL 9990 V**
	684,15	*25,40*		
24.500	26.500	0.875	**HDL 4305 R**	**HDL 4305 V**
622,30	*673,10*	*22,23*		
25.000	26.500	0.750	**HDL 4308 R**	**HDL 4308 V**
635,00	*673,10*	*19,05*		
25.187	26.875	0.750	**HDL 4311 R**	**HDL 4311 V**
639,74	*682,63*	*19,05*		
25.250	27.250	0.750	**HDL 4299 R**	**HDL 4299 V**
641,35	*692,15*	*19,05*		

Dimensions			Designations	
Shaft	Bore	Nominal seal width	Lip material	
d_1	D	b	R	V
in./*mm*			–	
25.500	26.750	0.750	**HDL 3022 R**	**HDL 3022 V**
647,70	*679,45*	*19,05*		
	27.500	0.875	**HDL 4318 R**	**HDL 4318 V**
	698,50	*22,23*		
25.750	27.500	0.750	**HDL 6998 R**	**HDL 6998 V**
654,05	*698,50*	*19,05*		
25.875	28.000	0.875	**HDL 4303 R**	**HDL 4303 V**
657,23	*711,20*	*22,23*		
25.988	27.625	0.750	**HDL 4306 R**	**HDL 4306 V**
660,09	*701,68*	*19,05*		
26.000	27.625	0.750	**HDL 5921 R**	**HDL 5921 V**
660,40	*701,68*	*19,05*		
26.125	27.625	0.750	**HDL 4329 R**	**HDL 4329 V**
663,58	*701,68*	*19,05*		
26.375	28.188	0.875	**HDL 4307 R**	**HDL 4307 V**
669,93	*715,98*	*22,23*		
26.500	28.000	0.750	**HDL 4533 R**	**HDL 4533 V**
673,10	*711,20*	*19,05*		
27.000	29.000	0.875	**HDL 4333 R**	**HDL 4333 V**
685,80	*736,60*	*22,23*		
27.250	29.250	0.875	**HDL 4626 R**	**HDL 4626 V**
692,15	*742,95*	*22,23*		
27.500	29.000	0.750	**HDL 4315 R**	**HDL 4315 V**
698,50	*736,60*	*19,05*		
27.625	29.625	0.750	**HDL 5001 R**	**HDL 5001 V**
701,68	*752,48*	*19,05*		
27.875	29.813	0.875	**HDL 4341 R**	**HDL 4341 V**
708,03	*757,25*	*22,23*		
28.000	29.500	0.750	**HDL 4343 R**	**HDL 4343 V**
711,20	*749,30*	*19,05*		
	29.813	0.750	**HDL 4316 R**	**HDL 4316 V**
	757,25	*19,05*		
28.438	31.000	0.875	**HDL 4321 R**	**HDL 4321 V**
722,33	*787,40*	*22,23*		
28.500	30.500	0.875	**HDL 4346 R**	**HDL 4346 V**
723,90	*774,70*	*22,23*		
28.750	30.750	0.875	**HDL 4628 R**	**HDL 4628 V**
730,25	*781,05*	*22,23*		
29.000	30.500	0.750	**HDL 4347 R**	**HDL 4347 V**
736,60	*774,70*	*19,05*		
	31.500	1.000	**HDL 8793 R**	**HDL 8793 V**
	800,10	*25,40*		
29.500	31.500	0.875	**HDL 4352 R**	**HDL 4352 V**
749,30	*800,10*	*22,23*		
	32.000	0.875	**HDL 4538 R**	**HDL 4538 V**
	812,80	*22,23*		

Radial shaft seals – HDL – inch dimensions
d_1 **30.000 – 37.000** in.

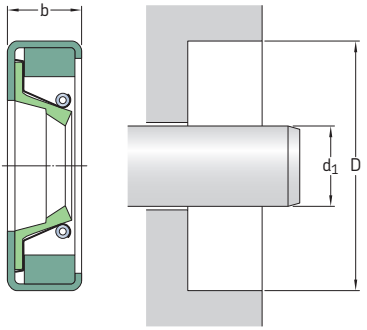

The table includes only a selection of available sizes. Contact your SKF sales representative for more information.

Please see **pages 74** to **76** for housing bore requirements.

Dimensions Shaft d_1	Bore D	Nominal seal width b	**Designations** Lip material R	V
in./*mm*			–	
30.000	31.500	0.750	**HDL 4356 R**	**HDL 4356 V**
762,00	*800,10*	*19,05*		
	31.625	0.750	**HDL 7870 R**	**HDL 7870 V**
	803,28	*19,05*		
	32.500	0.875	**HDL 4358 R**	**HDL 4358 V**
	825,50	*22,23*		
	32.750	0.875	**HDL 4359 R**	**HDL 4359 V**
	831,85	*22,23*		
30.250	32.500	0.875	**HDL 4906 R**	**HDL 4906 V**
768,35	*825,50*	*22,23*		
30.313	32.375	0.875	**HDL 4361 R**	**HDL 4361 V**
769,95	*822,33*	*22,23*		
30.500	32.500	0.875	**HDL 4365 R**	**HDL 4365 V**
774,70	*825,50*	*22,23*		
31.000	32.500	0.750	**HDL 5739 R**	**HDL 5739 V**
787,40	*825,50*	*19,05*		
	33.500	0.875	**HDL 4540 R**	**HDL 4540 V**
	850,90	*22,23*		
31.250	32.750	0.750	**HDL 4631 R**	**HDL 4631 V**
793,75	*831,85*	*19,05*		
31.750	33.750	0.875	**HDL 5016 R**	**HDL 5016 V**
806,45	*857,25*	*22,23*		
32.000	33.500	0.750	**HDL 3023 R**	**HDL 3023 V**
812,80	*850,90*	*19,05*		
32.125	34.125	0.875	**HDL 4371 R**	**HDL 4371 V**
815,98	*866,78*	*22,23*		
	34.125	0.750	**HDL 3002 R**	**HDL 3002 V**
	866,78	*19,05*		
32.313	34.500	0.875	**HDL 4373 R**	**HDL 4373 V**
820,75	*876,30*	*22,23*		
32.500	34.500	0.875	**HDL 4377 R**	**HDL 4377 V**
825,50	*876,30*	*22,22*		

Dimensions			Designations	
Shaft	Bore	Nominal seal width	Lip material	
d_1	D	b	R	V
in./*mm*			–	
32.750	34.250	0.750	**HDL 4542 R**	**HDL 4542 V**
831,85	*869,95*	*19,05*		
33.000	34.500	0.750	**HDL 4381 R**	**HDL 4381 V**
838,20	*876,30*	*19,05*		
	34.650	0.787	**HDL 4634 R**	**HDL 4634 V**
	880,10	*20,00*		
	35.000	0.875	**HDL 4382 R**	**HDL 4382 V**
	889,00	*22,23*		
33.500	35.000	0.875	**HDL 9504 R**	**HDL 9504 V**
850,90	*889,00*	*22,23*		
	35.625	0.875	**HDL 4548 R**	**HDL 4548 V**
	904,88	*22,23*		
33.625	35.625	0.875	**HDL 4328 R**	**HDL 4328 V**
854,08	*904,88*	*22,23*		
34.000	35.625	0.875	**HDL 4331 R**	**HDL 4331 V**
863,60	*904,88*	*22,23*		
34.250	36.000	0.750	**HDL 3017 R**	**HDL 3017 V**
869,95	*914,40*	*19,05*		
	36.750	0.875	**HDL 4335 R**	**HDL 4335 V**
	933,45	*22,23*		
34.500	36.000	0.750	**HDL 6908 R**	**HDL 6908 V**
876,30	*914,40*	*19,05*		
	36.500	1.000	**HDL 3021 R**	**HDL 3021 V**
	927,10	*25,40*		
34.750	36.750	0.875	**HDL 3831 R**	**HDL 3831 V**
882,65	*933,45*	*22,23*		
35.000	37.000	0.875	**HDL 3835 R**	**HDL 3835 V**
889,00	*939,80*	*22,23*		
35.250	37.250	0.875	**HDL 4416 R**	**HDL 4416 V**
895,35	*946,15*	*22,23*		
35.375	37.375	0.875	**HDL 4417 R**	**HDL 4417 V**
898,53	*949,33*	*22,23*		
35.437	38.583	0.875	**HDL 9079 R**	**HDL 9079 V**
900,09	*980,00*	*22,23*		
35.496	37.996	0.984	**HDL 3001 R**	**HDL 3001 V**
901,60	*965,10*	*25,00*		
35.500	37.500	0.875	**HDL 4553 R**	**HDL 4553 V**
901,70	*952,50*	*22,23*		
35.827	38.077	0.687	**HDL 3003 R**	**HDL 3003 V**
910,00	*967,15*	*17,45*		
36.000	38.000	0.875	**HDL 4421 R**	**HDL 4421 V**
914,40	*965,20*	*22,23*		
36.500	38.000	0.750	**HDL 4429 R**	**HDL 4429 V**
927,10	*965,20*	*19,05*		
36.750	38.750	0.875	**HDL 4432 R**	**HDL 4432 V**
933,45	*984,25*	*22,23*		
37.000	39.000	0.875	**HDL 4434 R**	**HDL 4434 V**
939,80	*990,60*	*22,23*		

Radial shaft seals – HDL – inch dimensions
d_1 **37.250 – 51.250** in.

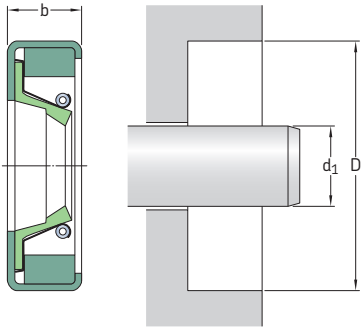

The table includes only a selection of available sizes. Contact your SKF sales representative for more information.

Please see **pages 74** to **76** for housing bore requirements.

Dimensions Shaft d_1	Bore D	Nominal seal width b	**Designations** Lip material R	V
in./*mm*			–	
37.250 *946,15*	39.250 *996,95*	0.875 *22,23*	**HDL 4436 R**	**HDL 4436 V**
37.374 *949,30*	39.500 *1 003,30*	0.875 *22,23*	**HDL 4425 R**	**HDL 4425 V**
37.437 *950,89*	39.500 *1 003,30*	0.875 *22,23*	**HDL 3847 R**	**HDL 3847 V**
37.500 *952,50*	39.000 *990,60*	0.750 *19,05*	**HDL 9411 R**	**HDL 9411 V**
38.000 *965,20*	39.500 *1 003,30*	0.750 *19,05*	**HDL 3004 R**	**HDL 3004 V**
	41.000 *1 041,40*	0.875 *22,23*	**HDL 4340 R**	**HDL 4340 V**
38.250 *971,55*	40.250 *1 022,35*	0.875 *22,23*	**HDL 4454 R**	**HDL 4454 V**
38.258 *971,75*	40.750 *1 035,05*	0.875 *22,23*	**HDL 4342 R**	**HDL 4342 V**
38.500 *977,90*	41.000 *1 041,40*	0.875 *22,23*	**HDL 4349 R**	**HDL 4349 V**
38.750 *984,25*	40.750 *1 035,05*	0.875 *22,23*	**HDL 4456 R**	**HDL 4456 V**
38.937 *988,99*	41.000 *1 041,40*	0.875 *22,23*	**HDL 4462 R**	**HDL 4462 V**
39.000 *990,60*	41.000 *1 041,40*	0.875 *22,23*	**HDL 4465 R**	**HDL 4465 V**
	42.250 *1 073,15*	0.875 *22,23*	**HDL 4577 R**	**HDL 4577 V**
39.750 *1 009,65*	42.250 *1 073,15*	0.875 *22,23*	**HDL 7538 R**	**HDL 7538 V**
40.000 *1 016,00*	42.000 *1 066,80*	0.875 *22,23*	**HDL 4467 R**	**HDL 4467 V**

Dimensions			Designations	
Shaft	Bore	Nominal seal width	Lip material	
d_1	D	b	R	V
in./*mm*			–	
40.500 *1 028,70*	42.500 *1 079,50*	0.875 *22,23*	**HDL 4468 R**	**HDL 4468 V**
	43.020 *1 092,70*	0.875 *22,23*	**HDL 1964 R**	**HDL 1964 V**
41.500 *1 054,10*	43.500 *1 104,90*	0.875 *22,23*	**HDL 4635 R**	**HDL 4635 V**
41.875 *1 063,63*	43.500 *1 104,90*	1.000 *25,40*	**HDL 8628 R**	**HDL 8628 V**
42.248 *1 073,10*	44.248 *1 123,90*	1.000 *25,40*	**HDL 4470 R**	**HDL 4470 V**
42.500 *1 079,50*	44.250 *1 123,95*	0.875 *22,23*	**HDL 5555 R**	**HDL 5555 V**
43.000 *1 092,20*	45.500 *1 155,70*	0.875 *22,23*	**HDL 7189 R**	**HDL 7189 V**
43.500 *1 104,90*	45.500 *1 155,70*	0.875 *22,23*	**HDL 4637 R**	**HDL 4637 V**
43.750 *1 111,25*	45.750 *1 162,05*	0.875 *22,23*	**HDL 4638 R**	**HDL 4638 V**
44.000 *1 117,60*	46.000 *1 168,40*	0.875 *22,23*	**HDL 7087 R**	**HDL 7087 V**
44.500 *1 130,30*	46.000 *1 168,40*	0.750 *19,05*	**HDL 4563 R**	**HDL 4563 V**
46.004 *1 168,50*	47.500 *1 206,50*	0.750 *19,05*	**HDL 3006 R**	**HDL 3006 V**
46.500 *1 181,10*	48.500 *1 231,90*	0.875 *22,23*	**HDL 4578 R**	**HDL 4578 V**
46.850 *1 189,99*	48.819 *1 240,00*	0.875 *22,23*	**HDL 8317 R**	**HDL 8317 V**
48.000 *1 219,20*	50.000 *1 270,00*	0.875 *22,23*	**HDL 8579 R**	**HDL 8579 V**
48.250 *1 225,55*	50.250 *1 276,35*	0.875 *22,23*	**HDL 4639 R**	**HDL 4639 V**
51.248 *1 301,71*	53.289 *1 353,55*	0.875 *22,23*	**HDL 6747 R**	**HDL 6747 V**
51.250 *1 301,75*	53.300 *1 353,82*	0.875 *22,23*	**HDL 1914 R**	**HDL 1914 V**

Radial shaft seals – HDS1, HDS2 and HDS3 – metric dimensions
d_1 **170 – 380** mm

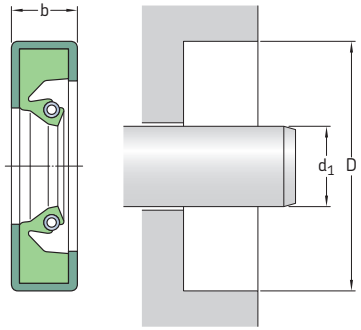

The table includes only a selection of sizes. For the full size range, please refer to **table 19** on **page 214**.

Please see **pages 74** to **76** for housing bore requirements.

Dimensions Shaft d_1	Bore D	Nominal seal width b	**Design**	**Lip material**	**Designation**
mm			–	–	–
170	210	16	HDS1	R	**170×210×16 HDS1 R**
200	230	15,87	HDS1	R	**200×230×16 HDS1 R**
	238	19	HDS1	V	**200×238×19 HDS1 V**
	240	20	HDS2	R	**200×240×20 HDS2 R**
210	245	16	HDS1	R	**210×245×16 HDS1 R**
	250	20	HDS1	V	**210×250×20 HDS1 V**
215	270	23	HDS2	R	**215×270×23 HDS2 R**
220	255	16	HDS1	R	**220×255×16 HDS1 R**[1)]
	260	16	HDS1	R	**220×260×16 HDS1 R**
	260	20	HDS1	R	**220×260×20 HDS1 R**
225	257	16	HDS1	R	**225×257×16 HDS1 R**
230	270	16	HDS2	V	**230×270×16 HDS2 V**
235	270	16	HDS2	R	**235×270×16 HDS2 R**
240	280	16	HDS2	R	**240×280×16 HDS2 R**
	280	16	HDS2	D	**240×280×16 HDS2 D**
245	305	28	HDS2	R	**245×305×28 HDS2 R**
250	280	16	HDS2	R	**250×280×16 HDS2 R**
	280	16	HDS1	D	**250×280×16 HDS1 D**
	285	16	HDS2	D	**250×285×16 HDS2 D**
	310	25	HDS1	R	**250×310×25 HDS1 R**
260	290	16	HDS2	D	**260×290×16 HDS2 D**
	290	16	HDS2	V	**260×290×16 HDS2 V**
	300	16	HDS2	R	**260×300×16 HDS2 R**
	300	20	HDS2	D	**260×300×20 HDS2 D**
265	310	16	HDS1	R	**265×310×16 HDS1 R**

[1)] 12,7 mm adjustable spacer lugs (4)

Dimensions Shaft d_1	Bore D	Nominal seal width b	Design	Lip material	Designation
mm			–	–	–
270	310	16	HDS3	V	**270×310×16 HDS3 V**[2]
	310	20	HDS2	V	**270×310×20 HDS2 V**
	330	25	HDS2	V	**270×330×25 HDS2 V**
275	310	16	HDS1	R	**275×310×16 HDS1 R**
280	310	16	HDS1	R	**280×310×16 HDS1 R**
	320	16	HDS1	R	**280×320×16 HDS1 R**
	320	20	HDS1	R	**280×320×20 HDS1 R**
	340	25	HDS1	R	**280×340×25 HDS1 R**
285	320	16	HDS2	R	**285×320×16 HDS2 R**
	325	16	HDS1	R	**285×325×16 HDS1 R**
290	330	18	HDS2	R	**290×330×18 HDS2 R**
	350	25	HDS2	R	**290×350×25 HDS2 R**
295	335	18	HDS1	R	**295×335×18 HDS1 R**
300	332	16	HDS2	R	**300×332×16 HDS2 R**
	335	18	HDS2	R	**300×335×18 HDS2 R**
	340	18	HDS1	V	**300×340×18 HDS1 V**
	340	18	HDS1	D	**300×340×18 HDS1 D**
	340	20	HDS1	V	**300×340×20 HDS1 V**
	345	22	HDS1	R	**300×345×22 HDS1 R**
	360	25	HDS2	V	**300×360×25 HDS2 V**
310	350	18	HDS2	V	**310×350×18 HDS2 V**
	350	20	HDS2	D	**310×350×20 HDS2 D**
	370	25	HDS2	D	**310×370×25 HDS2 D**
315	355	18	HDS1	V	**315×355×18 HDS1 V**
318	360	20	HDS2	R	**318×360×20 HDS2 R**
320	350	18	HDS1	R	**320×350×18 HDS1 R**
	360	18	HDS1	R	**320×360×18 HDS1 R**
	360	18	HDS2	V	**320×360×18 HDS2 V**
	380	25	HDS1	R	**320×380×25 HDS1 R**
330	370	18	HDS1	R	**330×370×18 HDS1 R**
	390	25	HDS1	R	**330×390×25 HDS1 R**
335	375	18	HDS3	D	**335×375×18 HDS3 D**[2]
340	380	18	HDS2	V	**340×380×18 HDS2 V**
	380	18	HDS2	D	**340×380×18 HDS2 D**
	380	20	HDS2	H	**340×380×20 HDS2 H**
	380	20	HDS2	R	**340×380×20 HDS2 R**
350	380	16	HDS2	R	**350×380×16 HDS2 R**
	390	18	HDS2	D	**350×390×18 HDS2 D**
360	400	18	HDS1	R	**360×400×18 HDS1 R**
	400	20	HDS1	V	**360×400×20 HDS1 V**
	410	17	HDS1	R	**360×410×17 HDS1 R**
365	405	18	HDS2	R	**365×405×18 HDS2 R**
370	410	16	HDS2	R	**370×410×16 HDS2 R**
375	420	18	HDS2	R	**375×420×18 HDS2 R**
380	420	20	HDS2	R	**380×420×20 HDS2 R**
	420	20	HDS2	V	**380×420×20 HDS2 V**
	440	25	HDS2	R	**380×440×25 HDS2 R**

[2] 12,7 mm adjustable spacer lugs (6)

Radial shaft seals – HDS1, HDS2 and HDS3 – metric dimensions
d_1 **390 – 700** mm

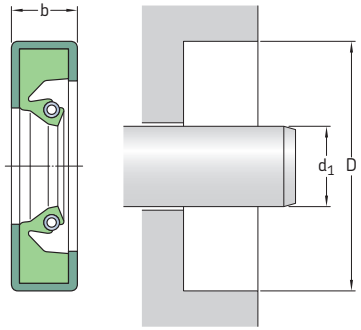

The table includes only a selection of sizes. For the full size range, please refer to **table 19** on **page 214**.

Please see **pages 74** to **76** for housing bore requirements.

Dimensions Shaft d_1	Bore D	Nominal seal width b	**Design**	**Lip material**	**Designation**
mm			–	–	–
390	430	16	HDS2	R	**390×430×16 HDS2 R**
395	430	18	HDS2	R	**395×430×18 HDS2 R**[2]
400	440	20	HDS1	R	**400×440×20 HDS1 R**
	440	20	HDS2	R	**400×440×20 HDS2 R**
	460	25	HDS1	R	**400×460×25 HDS1 R**
410	450	20	HDS2	R	**410×450×20 HDS2 R**
	460	22	HDS2	R	**410×460×22 HDS2 R**
420	460	20	HDS2	R	**420×460×20 HDS2 R**
	470	22	HDS1	R	**420×470×22 HDS1 R**[1]
430	480	22	HDS1	V	**430×480×22 HDS1 V**
	480	25	HDS2	R	**430×480×25 HDS2 R**
435	485	18	HDS2	R	**435×485×18 HDS2 R**[2]
440	470	20	HDS1	R	**440×470×20 HDS1 R**
	480	20	HDS1	R	**440×480×20 HDS1 R**
445	485	20	HDS1	R	**445×485×20 HDS1 R**
450	490	20	HDS1	R	**450×490×20 HDS1 R**
448	480	16	HDS2	R	**448×480×16 HDS2 R**
460	500	20	HDS1	R	**460×500×20 HDS1 R**
	500	20	HDS1	V	**460×500×20 HDS1 V**
	510	22	HDS2	V	**460×510×22 HDS2 V**
	520	25	HDS2	R	**460×520×25 HDS2 R**
470	510	20	HDS1	R	**470×510×20 HDS1 R**
	530	26	HDS2	R	**470×530×26 HDS2 R**
480	520	20	HDS1	R	**480×520×20 HDS1 R**

[1] 12,7 mm adjustable spacer lugs (4)
[2] 12,7 mm adjustable spacer lugs (6)

Dimensions Shaft d_1	Bore D	Nominal seal width b	Design	Lip material	Designation
mm			–	–	–
485	535	22	HDS1	R	**485×535×22 HDS1 R**
490	530	20	HDS1	R	**490×530×20 HDS1 R**
500	540	20	HDS1	R	**500×540×20 HDS1 R**
	550	18	HDS1	R	**500×550×18 HDS1 R**[2]
505	555	20,62	HDS2	R	**505×555×21 HDS2 R**
510	554	20	HDS1	D	**510×554×20 HDS1 D**
515	555	20	HDS2	R	**515×555×20 HDS2 R**
520	560	20	HDS1	R	**520×560×20 HDS1 R**
525	575	20	HDS3	D	**525×575×20 HDS3 D**[1]
530	580	20	HDS1	V	**530×580×20 HDS1 V**
	580	22	HDS1	R	**530×580×22 HDS1 R**
535	580	20	HDS3	D	**535×580×20 HDS3 D**[2]
540	590	20	HDS2	V	**540×590×20 HDS2 V**
545	595	22	HDS1	R	**545×595×22 HDS1 R**
550	590	20	HDS1	R	**550×590×20 HDS1 R**
560	610	20	HDS1	V	**560×610×20 HDS1 V**
570	620	22	HDS2	R	**570×620×22 HDS2 R**[2]
580	620	20	HDS3	D	**580×620×20 HDS3 D**[2]
585	620	20	HDS2	R	**585×620×20 HDS2 R**
590	630	20	HDS1	R	**590×630×20 HDS1 R**
600	640	20	HDS1	R	**600×640×20 HDS1 R**
	650	22	HDS2	R	**600×650×22 HDS2 R**
	650	25	HDS1	V	**600×650×25 HDS1 V**
610	660	20	HDS2	R	**610×660×20 HDS2 R**
630	670	20	HDS3	D	**630×670×20 HDS3 D**[1]
640	690	25	HDS1	R	**640×690×25 HDS1 R**
650	700	22	HDS2	V	**650×700×22 HDS2 V**
	710	25	HDS2	R	**650×710×25 HDS2 R**
660	700	18	HDS1	R	**660×700×18 HDS1 R**
670	714	20	HDS3	D	**670×714×20 HDS3 D**[2]
680	730	20	HDS2	R	**680×730×20 HDS2 R**
685	720	20	HDS2	R	**685×720×20 HDS2 R**
690	730	20	HDS2	R	**690×730×20 HDS2 R**
695	770	30	HDS1	R	**695×770×30 HDS1 R**
700	740	20	HDS1	R	**700×740×20 HDS1 R**

[1] 12,7 mm adjustable spacer lugs (4)
[2] 12,7 mm adjustable spacer lugs (6)

Radial shaft seals – HDS1, HDS2 and HDS3 – metric dimensions
d_1 **710 – 1 550** mm

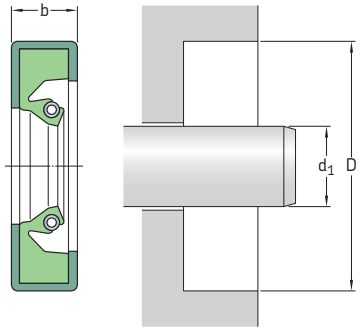

The table includes only a selection of sizes. For the full size range, please refer to **table 19** on **page 214**.

Please see **pages 74** to **76** for housing bore requirements.

Dimensions Shaft d_1	Bore D	Nominal seal width b	**Design**	**Lip material**	**Designation**
mm			–	–	–
710	760	20	HDS1	V	**710×760×20 HDS1 V**
720	770	25	HDS2	R	**720×770×25 HDS2 R**
740	780	16,50	HDS1	R	**740×780×17 HDS1 R**
750	780	18	HDS1	R	**750×780×18 HDS1 R**
	790	23	HDS1	V	**750×790×23 HDS1 V**
	800	25	HDS2	R	**750×800×25 HDS2 R**
	814	25	HDS1	R	**750×814×25 HDS1 R**[2]
760	800	20	HDS1	V	**760×800×20 HDS1 V**
	810	25	HDS1	R	**760×810×25 HDS1 R**
770	810	20	HDS1	V	**770×810×20 HDS1 V**
	845	27,79	HDS1	R	**770×845×28 HDS1 R**
780	820	19,05	HDS2	R	**780×820×19 HDS2 R**
790	850	25	HDS1	V	**790×850×25 HDS1 V**
800	840	20	HDS1	R	**800×840×20 HDS1 R**
810	860	25	HDS2	R	**810×860×25 HDS2 R**
825	860	20	HDS2	R	**825×860×20 HDS2 R**
850	914	25	HDS1	R	**850×914×25 HDS1 R**
860	920	25	HDS1	R	**860×920×25 HDS1 R**
880	940	25	HDS2	R	**880×940×25 HDS2 R**[2]
	944	25	HDS3	D	**880×944×25 HDS3 D**[2]
893	925	20	HDS2	H	**893×925×20 HDS2 H**
900	960	25	HDS1	R	**900×960×25 HDS1 R**[2]

[2] 12,7 mm adjustable spacer lugs (6)

Dimensions			Design	Lip material	Designation
Shaft d_1	Bore D	Nominal seal width b			
mm			–	–	–
910	974	22	HDS1	R	**910×974×22 HDS1 R**[2]
920	984	25	HDS2	V	**920×984×25 HDS2 V**
927	978	22	HDS2	D	**927×978×22 HDS2 D**
939	971	15,88	HDS3	H	**939×971×16 HDS3 H**[2]
940	1 000	25	HDS1	R	**940×1000×25 HDS1 R**[1]
950	1 006	20	HDS2	R	**950×1006×20 HDS2 R**
960	1 020	25	HDS2	H	**960×1020×25 HDS2 H**
	1 040	23	HDS2	V	**960×1040×23 HDS2 V**
990	1 045	25	HDS1	R	**990×1045×25 HDS1 R**
1 000	1 035	20	HDS2	R	**1000×1035×20 HDS2 R**
1 020	1 084	25	HDS1	R	**1020×1084×25 HDS1 R**
1 055	1 100	25	HDS2	D	**1055×1100×25 HDS2 D**
1 105	1 160	25	HDS1	R	**1105×1160×25 HDS1 R**
1 120	1 184	25	HDS2	R	**1120×1184×25 HDS2 R**[2]
1 140	1 180	20	HDS1	V	**1140×1180×20 HDS1 V**
1 220	1 255	20	HDS2	R	**1220×1255×20 HDS2 R**
1 250	1 314	25	HDS2	R	**1250×1314×25 HDS2 R**
1 260	1 300	18	HDS1	R	**1260×1300×18 HDS1 R**
1 370	1 420	19,05	HDS2	H	**1370×1420×19 HDS2 H**
	1 420	20	HDS1	R	**1370×1420×20 HDS1 R**
1 530	1 580	20	HDS1	R	**1530×1580×20 HDS1 R**
1 550	1 610	25	HDS2	V	**1550×1610×25 HDS2 V**

[1] 12,7 mm adjustable spacer lugs (4)
[2] 12,7 mm adjustable spacer lugs (6)

Radial shaft seals – HDS1, HDS2 and HDS3 – inch dimensions
d_1 **6.000 – 9.750** in.

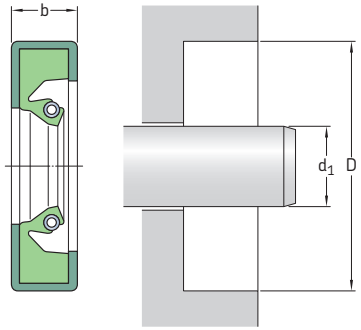

The table includes only a selection of sizes. For the full size range, please refer to **table 19** on **page 214**.

Please see **pages 74** to **76** for housing bore requirements.

Dimensions Shaft d_1	Bore D	Nominal seal width b	**Design**	**Lip material**	**Lug**[1]	**Designation**
in./*mm*			–	–	–	–
6.000	7.500	0.625	HDS1	R		**597623**
152,40	*190,50*	*15,88*				
6.750	7.750	0.625	HDS1	V		**67512**
171,45	*196,85*	*15,88*				
7.250	8.750	0.625	HDS2	V		**72510**
184,15	*222,25*	*15,88*				
7.500	8.750	0.625	HDS1	V		**75048**
190,50	*222,25*	*15,88*				
7.750	9.000	0.625	HDS1	R		**77531**
196,85	*228,60*	*15,88*				
	9.250	0.625	HDS1	V		**77539**
	234,95	*15,88*				
8.000	9.250	0.625	HDS1	V		**77996**
203,20	*234,95*	*15,88*				
	9.500	0.687	HDS2	V		**80009**
	241,30	*17,45*				
	10.000	1.000	HDS1	R		**80088**
	254,00	*25,40*				
8.125	9.378	0.625	HDS1	R		**593198**
206,38	*238,20*	*15,88*				
	10.125	1.000	HDS1	R		**81253**
	257,18	*25,40*				
8.250	9.500	0.625	HDS2	V		**82526**
209,55	*241,30*	*15,88*				
	10.250	0.625	HDS2	V		**82559**
	260,35	*15,88*				
8.345	10.750	1.250	HDS1	R		**594186**
211,96	*273,05*	*31,75*				
8.375	9.750	0.625	HDS3	D	4	**83702**
212,73	*247,65*	*15,88*				

[1] Number of 0,5 in. adjustable spacer lugs

Dimensions Shaft d_1	Bore D	Nominal seal width b	Design	Lip material	Lug[1]	Designation
in./*mm*			–	–	–	–
8.500	9.750	0.625	HDS2	D		**593768**
215,90	*247,65*	*15,88*				
	10.500	0.625	HDS1	V		**85018**
	266,70	*15,88*				
8.540	9.750	0.625	HDS2	D		**593855**
215,90	*247,65*	*15,88*				
8.625	10.500	0.750	HDS1	R		**590758**
219,08	*266,70*	*19,05*				
	10.625	0.750	HDS1	V		**86240**
	269,88	*19,05*				
8.750	10.000	0.625	HDS2	R		**592626**
222,25	*254,00*	*15,88*				
8.875	10.125	0.625	HDS2	D		**593779**
225,43	*257,18*	*15,88*				
9.000	10.250	0.750	HDS1	R		**90017**
228,60	*260,35*	*19,05*				
	10.500	0.625	HDS3	D	4	**90027**
	266,70	*15,88*				
	11.000	0.750	HDS2	R		**590787**
	279,40	*19,05*				
9.125	10.375	0.625	HDS1	R		**592653**
231,78	*263,53*	*15,88*				
	10.625	0.688	HDS1	R		**590270**
	269,88	*17,48*				
	11.125	0.688	HDS1	R		**590174**
	282,58	*17,48*				
	11.125	0.813	HDS2	R		**91202**
	282,50	*20,65*				
9.250	10.750	0.750	HDS1	R		**590093**
234,95	*273,05*	*19,05*				
	11.250	0.813	HDS2	V		**92544**
	285,75	*20,65*				
	11.250	1.000	HDS1	R		**590798**
	285,75	*25,40*				
9.375	11.375	0.875	HDS1	R		**93751**
238,13	*288,93*	*22,23*				
9.438	10.635	0.750	HDS1	R		**593894**
239,73	*270,13*	*19,05*				
9.500	10.750	0.625	HDS2	R		**95045**
241,30	*273,05*	*15,88*				
	11.000	0.625	HDS1	R		**590653**
	279,40	*15,88*				
	11.500	0.813	HDS1	V		**95068**
	292,10	*20,65*				
	11.500	1.000	HDS1	R		**590820**
	292,10	*25,40*				
9.688	10.875	0.625	HDS1	R		**594080**
246,08	*276,23*	*15,88*				
9.750	11.000	0.625	HDS3	D	4	**97527**
247,65	*279,40*	*15,88*				
	11.750	1.000	HDS1	R		**97548**
	298,45	*25,40*				

[1] Number of 0,5 in. adjustable spacer lugs

Radial shaft seals – HDS1, HDS2 and HDS3 – inch dimensions
d_1 **9.844 – 11.813** in.

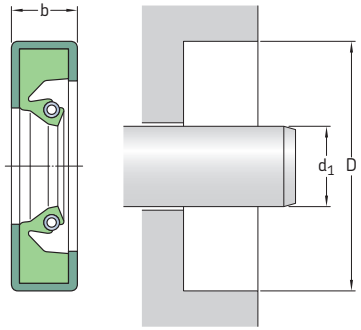

The table includes only a selection of sizes. For the full size range, please refer to **table 19** on **page 214**.

Please see **pages 74** to **76** for housing bore requirements.

Dimensions Shaft d_1	Bore D	Nominal seal width b	**Design**	**Lip material**	**Lug**[1]	**Designation**
in./*mm*			–	–	–	–
9.844	11.409	0.625	HDS2	R		**98444**
250,04	*289,79*	*15,88*				
9.875	11.375	0.750	HDS2	R		**592763**
250,83	*288,93*	*19,05*				
	11.500	0.750	HDS1	R		**592727**
	292,10	*19,05*				
9.938	12.000	1.000	HDS2	R		**529752**
252,43	*304,80*	*25,40*				
10.000	11.250	0.625	HDS1	R		**1000110**
254,00	*285,75*	*15,88*				
	11.250	0.625	HDS2	R		**1000111**
	285,75	*15,88*				
	11.500	0.625	HDS3	D	4	**1000239**
	292,10	*15,88*				
	11.750	0.625	HDS1	R		**1000360**
	298,45	*15,88*				
10.125	11.625	0.688	HDS1	R		**1013240**
257,18	*295,28*	*17,48*				
	11.625	0.688	HDS2	R		**1013242**
	295,28	*17,48*				
10.236	12.590	0.984	HDS1	R		**1024690**
259,99	*319,79*	*24,99*				
10.250	11.500	0.625	HDS2	D		**1025112**
260,35	*292,10*	*15,88*				
	11.750	0.688	HDS3	D	4	**1025249**
	298,45	*17,48*				
	11.750	0.750	HDS2	R		**1025252**
	298,45	*19,05*				
10.375	11.625	0.875	HDS1	R		**1038140**
263,53	*295,28*	*22,23*				

[1] Number of 0,5 in. adjustable spacer lugs

Dimensions Shaft d_1	Bore D	Nominal seal width b	Design	Lip material	Lug[1]	Designation
in./*mm*			–	–	–	–
10.438	12.438	0.875	HDS1	R		**1044560**
265,13	*315,93*	*22,23*				
10.500	11.750	0.625	HDS1	V		**1050113**
266,70	*298,45*	*15,88*				
	12.000	0.625	HDS3	D	4	**1050239**
	304,80	*15,88*				
	12.000	0.750	HDS2	V		**1050251**
	304,80	*19,05*				
10.688	12.500	0.625	HDS1	V		**1068456**
271,48	*317,50*	*15,88*				
	13.000	0.688	HDS2	V		**1068693**
	330,20	*17,48*				
10.750	12.000	0.625	HDS2	R		**1075112**
273,05	*304,80*	*15,88*				
	12.000	0.625	HDS1	R		**1075110**
	304,80	*15,88*				
	12.250	0.625	HDS1	R		**1075230**
	311,15	*15,88*				
10.938	12.750	0.625	HDS1	R		**1093440**
277,83	*323,85*	*15,88*				
11.000	12.250	0.625	HDS2	D		**1100113**
279,40	*311,15*	*15,88*				
	12.250	0.625	HDS2	V		**1100104**
	311,15	*15,88*				
	12.500	0.750	HDS1	R		**1100250**
	317,50	*19,05*				
	13.000	0.813	HDS2	R		**1100553**
	330,20	*20,65*				
11.250	12.500	0.625	HDS2	R		**1125111**
285,75	*317,50*	*15,88*				
	12.500	0.625	HDS1	R		**1125110**
	317,50	*15,88*				
11.375	13.000	0.750	HDS1	R		**1138330**
288,93	*330,20*	*19,05*				
11.500	13.000	0.750	HDS2	R		**1150253**
292,10	*330,20*	*19,05*				
	13.500	0.813	HDS1	R		**1150550**
	342,90	*20,65*				
	13.500	1.000	HDS1	R		**1150580**
	342,90	*25,40*				
11.688	12.938	0.625	HDS1	R		**1169110**
296,88	*328,63*	*15,88*				
11.750	13.250	0.688	HDS2	V		**1175224**
298,45	*336,55*	*17,48*				
	13.250	0.750	HDS2	R		**1175252**
	336,55	*19,05*				
11.811	13.378	0.709	HDS1	R		**1181300**
300,00	*339,80*	*18,01*				
11.813	13.812	0.875	HDS1	R		**1181560**
300,05	*350,82*	*22,23*				

[1] Number of 0,5 in. adjustable spacer lugs

Radial shaft seals – HDS1, HDS2 and HDS3 – inch dimensions
d_1 **12.000 – 15.250** in.

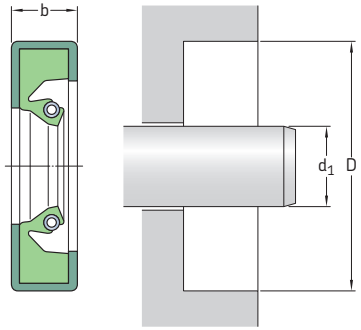

The table includes only a selection of sizes. For the full size range, please refer to **table 19** on **page 214**.

Please see **pages 74** to **76** for housing bore requirements.

Dimensions Shaft d_1	Bore D	Nominal seal width b	**Design**	**Lip material**	**Lug**[1]	**Designation**
in./*mm*			–	–	–	–
12.000	13.500	0.625	HDS2	R		**1200231**
304,80	*342,90*	*15,88*				
	13.500	0.625	HDS1	R		**1200230**
	342,90	*15,88*				
	13.500	0.625	HDS3	D	4	**1200239**
	342,90	*15,88*				
	13.500	0.688	HDS1	R		**1200240**
	342,90	*17,48*				
	13.500	0.750	HDS2	R		**1200255**
	342,90	*19,05*				
	14.000	0.625	HDS1	V		**1200523**
	355,60	*15,88*				
	14.000	1.000	HDS2	R		**1200585**
	355,60	*25,40*				
12.250	13.750	0.625	HDS3	D	4	**1225239**
311,15	*349,25*	*15,88*				
12.500	13.750	0.625	HDS1	R		**1250110**
317,50	*349,25*	*15,88*				
	14.000	0.688	HDS3	D	4	**1250249**
	355,60	*17,48*				
	14.500	0.750	HDS1	R		**1250540**
	368,30	*19,05*				
	14.500	0.813	HDS2	V		**1250554**
	368,30	*20,65*				
12.750	14.250	0.688	HDS2	V		**1275243**
323,85	*361,95*	*17,48*				
	14.250	0.750	HDS2	R		**1275252**
	361,95	*19,05*				
13.000	14.500	0.688	HDS2	R		**1300244**
330,20	*368,30*	*17,48*				
	14.500	0.688	HDS2	V		**1300283**
	368,30	*17,48*				
	15.000	0.750	HDS2	R		**1300542**
	381,00	*19,05*				

[1] Number of 0,5 in. adjustable spacer lugs

Dimensions Shaft d_1	Bore D	Nominal seal width b	Design	Lip material	Lug[1]	Designation
in./*mm*			–	–	–	–
13.250	14.750	0.625	HDS3	D	4	**1325239**
336,55	*374,65*	*15,88*				
	14.750	0.688	HDS2	R		**1325242**
	374,65	*17,48*				
13.500	15.250	0.750	HDS1	R		**1350380**
342,90	*387,35*	*19,05*				
	15.500	0.813	HDS2	V		**1350564**
	393,70	*20,65*				
13.750	15.000	0.750	HDS1	R		**1375130**
349,25	*381,00*	*19,05*				
	15.250	0.625	HDS1	R		**1375230**
	387,35	*15,88*				
	15.250	0.688	HDS1	R		**1375240**
	387,35	*17,48*				
	15.500	0.750	HDS1	R		**1375380**
	393,70	*19,05*				
	15.750	0.813	HDS2	V		**1375553**
	400,05	*20,65*				
14.000	15.500	0.625	HDS2	V		**1400234**
355,60	*393,70*	*15,88*				
	15.500	0.625	HDS2	R		**1400232**
	393,70	*15,88*				
	15.500	0.750	HDS1	R		**1400250**
	393,70	*19,05*				
	15.750	0.688	HDS1	R		**1400370**
	400,05	*17,48*				
	16.000	1.000	HDS1	R		**1400580**
	406,40	*25,40*				
14.250	15.750	0.750	HDS2	R		**1425252**
361,95	*400,05*	*19,05*				
	16.250	0.813	HDS2	R		**1425552**
	412,75	*20,65*				
14.375	16.000	0.688	HDS2	D		**1438321**
365,13	*406,40*	*17,48*				
14.500	16.000	0.688	HDS2	R		**1450242**
368,30	*406,40*	*17,48*				
	16.500	0.750	HDS2	R		**1450542**
	419,10	*19,05*				
14.750	16.500	0.875	HDS2	R		**1475411**
374,65	*419,10*	*22,23*				
15.000	16.500	0.688	HDS1	R		**1500240**
381,00	*419,10*	*17,48*				
	16.500	0.750	HDS1	R		**1500250**
	419,10	*19,05*				
	16.750	0.750	HDS1	R		**1500380**
	425,45	*19,05*				
	17.000	0.750	HDS3	D	4	**1500549**
	431,80	*19,05*				
15.250	16.750	0.750	HDS2	R		**1525252**
387,35	*425,45*	*19,05*				
	17.250	0.750	HDS2	R		**1525542**
	438,15	*19,05*				
	17.250	0.875	HDS1	R		**1525560**
	438,15	*22,23*				

[1] Number of 0,5 in. adjustable spacer lugs

Radial shaft seals – HDS1, HDS2 and HDS3 – inch dimensions
d_1 15.500 – 22.250 in.

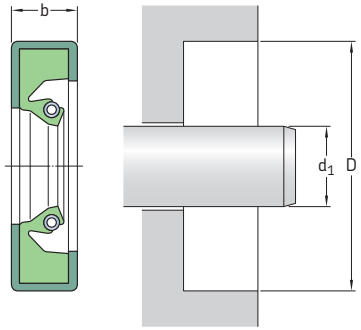

The table includes only a selection of sizes. For the full size range, please refer to **table 19** on **page 214**.

Please see **pages 74** to **76** for housing bore requirements.

Dimensions Shaft d_1	Bore D	Nominal seal width b	**Design**	**Lip material**	**Lug**[1]	**Designation**
in./*mm*			–	–	–	–
15.500	16.875	0.625	HDS1	R		**1550160**
393,70	*428,63*	*15,88*				
	17.500	0.750	HDS2	R		**1550542**
	444,50	*19,05*				
	17.500	0.813	HDS1	R		**1550550**
	444,50	*20,65*				
15.625	17.625	0.875	HDS1	R		**1563560**
396,88	*447,68*	*22,23*				
15.750	17.250	0.688	HDS3	D	4	**1575249**
400,05	*438,15*	*17,48*				
16.000	17.500	0.750	HDS1	R		**1600250**
406,40	*444,50*	*19,05*				
	18.000	1.000	HDS2	R		**1600585**
	457,20	*25,40*				
16.250	17.750	0.688	HDS1	R		**1625240**
412,75	*450,85*	*17,48*				
16.500	18.000	0.750	HDS2	R		**1650252**
419,10	*457,20*	*19,05*				
16.750	18.500	0.875	HDS1	V		**1675413**
425,45	*469,90*	*22,23*				
17.000	18.500	0.688	HDS2	R		**1700245**
431,80	*469,90*	*17,48*				
	18.500	0.750	HDS2	D		**1700251**
	469,90	*19,05*				
	19.000	0.750	HDS2	R		**1700541**
	482,60	*19,05*				
17.250	18.750	0.750	HDS2	R		**1725255**
438,15	*476,25*	*19,05*				

[1] Number of 0,5 in. adjustable spacer lugs

Dimensions Shaft d_1	Bore D	Nominal seal width b	Design	Lip material	Lug[1]	Designation
in./*mm*			–	–	–	–
17.500	19.000	0.625	HDS1	R		**1750230**
444,50	*482,60*	*15,88*				
	19.250	0.688	HDS1	R		**1750370**
	488,95	*17,48*				
	19.500	0.688	HDS1	R		**1750530**
	495,30	*17,48*				
17.625	19.250	0.688	HDS1	R		**1763320**
447,68	*488,95*	*17,48*				
18.000	19.500	0.688	HDS3	D	4	**1800249**
457,20	*495,30*	*17,48*				
	19.750	0.750	HDS2	R		**1800382**
	501,65	*19,05*				
18.250	19.750	0.750	HDS2	R		**1825252**
463,55	*501,65*	*19,05*				
18.500	20.500	0.875	HDS1	R		**1850560**
469,90	*520,70*	*22,23*				
18.750	20.750	0.813	HDS2	R		**1875553**
476,25	*527,05*	*20,65*				
19.000	20.500	0.750	HDS1	R		**1900250**
482,60	*520,70*	*19,05*				
	21.000	0.875	HDS2	V		**1900562**
	533,40	*22,23*				
19.250	21.250	0.938	HDS1	R		**1925570**
488,95	*539,75*	*23,24*				
19.500	21.500	0.875	HDS1	R		**1950560**
495,30	*546,10*	*22,23*				
20.000	21.500	0.625	HDS3	D	4	**2000239**
508,00	*546,10*	*15,88*				
20.250	21.750	0.750	HDS1	R		**2025250**
514,35	*552,45*	*19,05*				
20.500	22.500	0.750	HDS2	R		**2050542**
520,70	*571,50*	*19,05*				
	22.500	0.875	HDS1	R		**2050560**
	571,50	*22,23*				
20.750	22.750	0.875	HDS2	D		**2075562**
527,05	*577,85*	*22,23*				
21.000	22.750	0.813	HDS1	R		**2100390**
533,40	*577,85*	*20,65*				
	23.000	0.625	HDS3	D	4	**2100529**
	584,20	*15,87*				
21.500	23.500	0.813	HDS1	R		**2150550**
546,10	*596,90*	*20,65*				
22.000	23.500	0.750	HDS2	V		**2200213**
558,80	*596,90*	*19,05*				
	24.000	0.875	HDS2	R		**2200565**
	609,60	*22,23*				
	24.000	1.250	HDS1	D		**526339**
	609,60	*31,75*				
22.250	24.250	0.875	HDS3	H	4	**2225568**
565,15	*615,95*	*22,23*				

[1] Number of 0,5 in. adjustable spacer lugs

Radial shaft seals – HDS1, HDS2 and HDS3 – inch dimensions
d_1 **23.000 – 63.340** in.

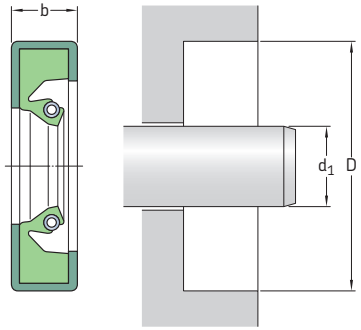

The table includes only a selection of sizes. For the full size range, please refer to **table 19** on **page 214**.

Please see **pages 74** to **76** for housing bore requirements.

Dimensions Shaft d_1	Bore D	Nominal seal width b	**Design**	**Lip material**	**Lug**[1]	**Designation**
in./*mm*			–	–	–	–
23.000	24.750	0.750	HDS2	V		**2300384**
584,20	*628,65*	*19,05*				
23.500	25.500	0.875	HDS1	R		**2350560**
596,90	*647,70*	*22,23*				
24.000	25.500	0.750	HDS1	R		**2400250**
609,60	*647,70*	*19,05*				
	26.000	0.875	HDS2	R		**2400559**
	660,40	*22,23*				
24.250	26.250	0.875	HDS2	V		**2425562**
615,95	*666,75*	*22,23*				
25.000	27.000	1.000	HDS1	R		**2500580**
635,00	*685,80*	*25,40*				
25.500	27.500	1.000	HDS2	R		**2550585**
647,70	*698,50*	*25,40*				
26.000	27.625	0.750	HDS2	R		**2600332**
660,40	*701,68*	*19,05*				
	28.500	0.875	HDS1	R		**2600760**
	723,90	*22,23*				
26.500	28.500	0.875	HDS1	R		**2650560**
673,10	*723,90*	*22,23*				
28.000	29.625	0.750	HDS2	R		**2800331**
711,20	*752,48*	*19,05*				
	30.000	0.875	HDS2	R		**2800565**
	762,00	*22,23*				
29.000	31.000	0.875	HDS2	R		**2900563**
736,60	*787,40*	*22,23*				
29.500	31.500	0.875	HDS2	D		**2950564**
749,30	*800,10*	*22,23*				

[1] Number of 0,5 in. adjustable spacer lugs

Dimensions Shaft d_1	Bore D	Nominal seal width b	Design	Lip material	Lug[1]	Designation
in./*mm*			–	–	–	–
30.250	32.500	0.875	HDS1	R		**3025660**
768,35	*825,50*	*22,23*				
30.500	32.500	0.875	HDS2	V		**3050514**
774,70	*825,50*	*22,23*				
	33.000	1.000	HDS2	R		**3050785**
	838,20	*25,40*				
31.000	33.000	0.813	HDS1	R		**3100550**
787,40	*838,20*	*20,65*				
32.500	34.500	0.875	HDS1	R		**3250560**
825,50	*876,30*	*22,23*				
33.000	34.688	0.750	HDS2	R		**3300351**
838,20	*881,08*	*19,05*				
33.500	36.000	0.875	HDS1	R		**3350760**
850,90	*914,40*	*22,23*				
34.000	36.000	0.875	HDS1	R		**3400560**
863,60	*914,40*	*22,23*				
34.500	36.500	0.875	HDS2	D		**3450563**
876,30	*927,10*	*22,23*				
37.500	39.000	0.875	HDS2	R		**3750272**
952,50	*990,60*	*22,23*				
	39.500	0.875	HDS1	D		**3750561**
	1 003,30	*22,23*				
38.000	40.000	0.875	HDS2	R		**3800565**
965,20	*1 016,00*	*22,23*				
40.500	43.000	0.875	HDS2	V		**4050774**
1 028,70	*1 092,20*	*22,23*				
43.500	45.500	0.875	HDS2	R		**4350565**
1 104,90	*1 155,70*	*22,23*				
	45.500	0.875	HDS1	R		**4350560**
	1 155,70	*22,23*				
45.000	47.000	0.875	HDS1	R		**4500560**
1 143,00	*1 193,80*	*22,23*				
46.000	47.500	0.750	HDS2	H		**4600252**
1 168,40	*1 206,50*	*19,05*				
49.000	50.625	0.813	HDS1	R		**4900340**
1 244,60	*1 285,88*	*20,65*				
51.500	53.500	1.500	HDS1	R		**5150590**
1 308,10	*1 358,90*	*38,10*				
54.750	56.375	0.875	HDS1	R		**5475340**
1 390,65	*1 431,93*	*22,23*				
62.500	64.000	0.875	HDS1	R		**6250270**
1 587,50	*1 625,60*	*22,23*				
63.340	64.500	0.750	HDS2	D		**6334342**
1 608,84	*1 638,30*	*19,05*				

[1] Number of 0,5 in. adjustable spacer lugs

Radial shaft seals – HDS1K – inch dimensions
d_1 **7.939** in.

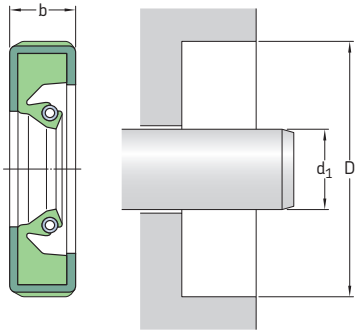

The table includes only a selection of sizes. For the full size range, please refer to **table 19** on **page 214**.

Please see **pages 74** to **76** for housing bore requirements.

Dimensions			**Design**	**Lip material**	**Designation**
Shaft	Bore	Nominal seal width			
d_1	D	b			
in./*mm*			–	–	–
7.939 *201,65*	10.125 *257,18*	0.688 *17,48*	HDS1K	H	**597606**

Radial shaft seals – HDS2K – metric dimensions
d_1 **340 – 810** mm

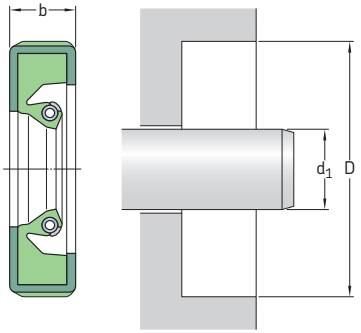

The table includes only a selection of sizes. For the full size range, please refer to **table 19** on **page 214**.

Please see **pages 74** to **76** for housing bore requirements.

Dimensions			**Design**	**Lip material**	**Designation**
Shaft	Bore	Nominal seal width			
d_1	D	b			
mm			–	–	–
340	380	18	HDS2K	V	**340×380×18 HDS2K V**
360	404	20	HDS2K	R	**360×404×20 HDS2K R**
400	450	18	HDS2K	R	**400×450×18 HDS2K R**
810	874	25	HDS2K	R	**810×874×25 HDS2K R**

Radial shaft seals – HDS2K – inch dimensions
d_1 **16.500** in.

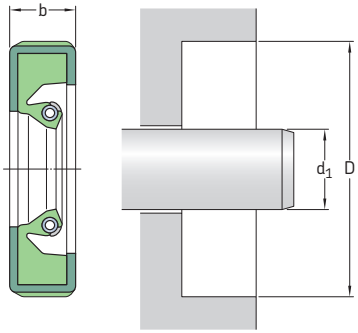

The table includes only a selection of sizes. For the full size range, please refer to **table 19** on **page 214**.

Please see **pages 74** to **76** for housing bore requirements.

Dimensions			**Design**	**Lip material**	**Designation**
Shaft	Bore	Nominal seal width			
d_1	D	b			
in./*mm*			–	–	–
16.500 *419,10*	18,000 *457,20*	0.750 *19,05*	HDS2K	R	**1650230**

Radial shaft seals – HDSF and HDSH seals – metric dimensions
d_1 **440 – 760** mm

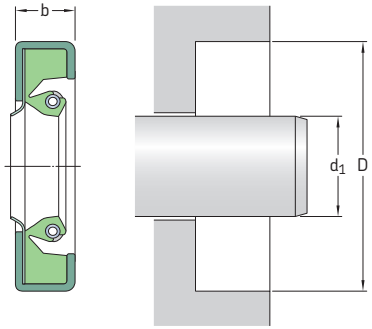

The table includes only a selection of sizes. For the full size range, please refer to **table 19** on **page 214**.

Please see **pages 74** to **76** for housing bore requirements.

Dimensions			**Design**	**Lip material**	**Designation**
Shaft	Bore	Nominal seal width			
d_1	D	b			
mm			–	–	–
440	490	20,40	HDSF2	VT	**440×490×20 HDSF2 VT**
	490	20,40	HDSH7	HT	**440×490×20 HDSH7 HT**
500	540	20	HDSF2	RT	**500×540×20 HDSF2 RT**
760	800	20	HDSF2	HT	**760×800×20 HDSF2 HT**
	800	20	HDSF7	HT	**760×800×20 HDSF7 HT**

Radial shaft seals – HDSF and HDSH seals – inch dimensions
d_1 **10.500 – 31.890** in.

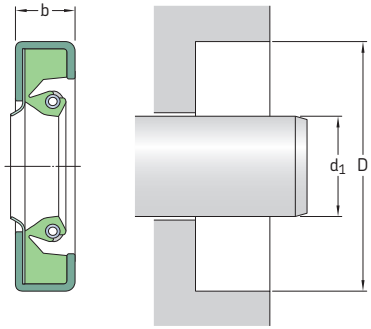

The table includes only a selection of sizes. For the full size range, please refer to **table 19** on **page 214**.

Please see **pages 74** to **76** for housing bore requirements.

Dimensions Shaft d_1	Bore D	Nominal seal width b	**Design**	**Lip material**	**Designation**
in./*mm*			–	–	–
10.500	12.500	1.000	HDSF1	VT	**1050966**
266,70	*317,50*	*25,40*			
14.000	16.000	1.000	HDSF1	VT	**1400957**
355,60	*406,40*	*25,40*			
15.500	17.500	0.750	HDSH7	RT	**1550951**
393,70	*444,50*	*19,05*			
	17.500	0.750	HDSF2	HT	**1550952**
	444,50	*19,05*			
16.000	18.000	0.875	HDSF2	HT	**1600510**
406,40	*457,20*	*22,23*			
18.500	20.500	0.875	HDSF2	DT	**1850953**
469,90	*520,70*	*22,23*			
19.000	21.000	0.870	HDSF2	VT	**1900954**
482,60	*533,40*	*22,10*			
31.890	34.409	0.921	HDSF2	VT	**3189981**
810,01	*873,99*	*23,39*			
	34.409	0.921	HDSH7	HT	**3189988**
	873,99	*23,39*			

Radial shaft seals – HDSA and HDSB seals – metric dimensions
d_1 **240 – 790** mm

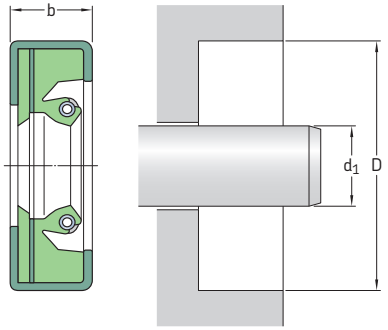

The table includes only a selection of sizes. For the full size range, please refer to **table 19** on **page 214**.

Please see **pages 74** to **76** for housing bore requirements.

Dimensions Shaft d_1	Bore D	Nominal seal width b	**Design**	**Lip material**	**Designation**
mm			–	–	–
240	280	23	HDSA1	RD	**240×280×23 HDSA1 RD**
270	330	25,40	HDSA1	RD	**270×330×25 HDSA1 RD**
310	370	25,40	HDSA1	RD	**310×370×25 HDSA1 RD**
317	352	23	HDSA1	RD	**317×352×23 HDSA1 RD**
320	360	25	HDSB2	RD	**320×360×25 HDSB2 RD**
	380	28	HDSA2	RD	**320×360×28 HDSA2 RD**
364	420	25	HDSA2	RD	**364×420×25 HDSA2 RD**
380	420	22,20	HDSA2	VD	**380×420×22 HDSA2 VD**
	440	28	HDSA2	RD	**380×440×28 HDSA2 RD**
390	434	22	HDSA2	VD	**390×434×22 HDSA2 VD**
400	460	28	HDSA2	RD	**400×460×28 HDSA2 RD**
430	470	20	HDSB1	RD	**430×470×20 HDSB1 RD**
440	480	22,23	HDSA2	VD	**440×480×22 HDSA2 VD**
560	620	30	HDSA2	RD	**560×620×30 HDSA2 RD**
580	640	30	HDSA2	RD	**580×640×30 HDSA2 RD**
	640	30	HDSB1	RD	**580×640×30 HDSB1 RD**
790	850	25	HDSA1	RD	**790×850×25 HDSA1 RD**

Radial shaft seals – HDSA and HDSB seals – inch dimensions
d_1 **6.000 – 9.620** in.

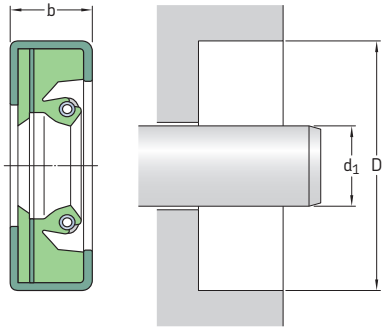

The table includes only a selection of sizes. For the full size range, please refer to **table 19** on **page 214**.

Please see **pages 74** to **76** for housing bore requirements.

Dimensions			Design	Lip material	Designation
Shaft	Bore	Nominal seal width			
d_1	D	b			
in./*mm*			–	–	–
6.000	7.500	0.750	HDSA1	RD	**597625**
152,40	*190,50*	*19,05*			
6.625	8.125	0.875	HDSA2	VD	**594828**
168,28	*206,38*	*22,23*			
7.250	8.750	0.875	HDSA2	VD	**72594**
184,15	*222,25*	*22,23*			
8.000	10.000	1.000	HDSB1	RD	**592328**
203,20	*254,00*	*25,40*			
	10.000	1.250	HDSA1	RD	**592336**
	254,00	*31,75*			
	10.125	1.250	HDSB1	RD	**80092**
	257,18	*31,75*			
8.250	10.250	0.875	HDSB1	RD	**591921**
209,55	*260,35*	*22,23*			
	10.250	1.250	HDSB1	RD	**590357**
	260,35	*31,75*			
8.500	9.750	0.870	HDSA2	DD	**595513**
215,90	*247,65*	*22,10*			
	10.000	0.875	HDSA1	VD	**596196**
	254,00	*22,23*			
	10.000	1.000	HDSA1	RD	**590731**
	254,00	*25,40*			
	10.500	0.875	HDSA1	VD	**592798**
	266,70	*22,23*			
	10.500	1.000	HDSB1	RD	**592149**
	266,70	*25,40*			
	10.500	1.000	HDSA2	VD	**594902**
	266,70	*25,40*			
	10.500	1.250	HDSA1	RD	**590245**
	266,70	*31,75*			

Dimensions			Design	Lip material	Designation
Shaft	Bore	Nominal seal width			
d_1	D	b			
in./*mm*			–	–	–
8.750	10.750	0.875	HDSA1	RD	**592492**
222,25	*273,05*	*22,23*			
8.875	10.125	0.875	HDSA2	DD	**595127**
225,43	*257,18*	*22,23*			
	10.875	0.875	HDSA1	RD	**591984**
	276,23	*22,23*			
	11.250	0.875	HDSA1	RD	**592464**
	285,75	*22,23*			
9.000	10.250	0.875	HDSA2	VD	**90054**
228,60	*260,35*	*22,23*			
	10.500	0.875	HDSA1	RD	**597343**
	266,70	*22,23*			
	11.000	1.000	HDSA2	VD	**594903**
	279,40	*25,40*			
9.250	10.438	0.875	HDSA1	RD	**92591**
234,95	*265,13*	*22,23*			
	11.000	1.375	HDSA1	RD	**592452**
	279,40	*34,93*			
	11.250	0.875	HDSA1	VD	**593312**
	285,75	*22,23*			
9.375	12.750	1.250	HDSB1	RD	**590688**
238,13	*323,85*	*31,75*			
9.500	11.500	1.250	HDSA2	RD	**590375**
241,30	*292,10*	*31,75*			
	11.500	1.250	HDSA2	DD	**593667**
	292,10	*31,75*			
9.620	12.750	1.250	HDSA1	RD	**96290**
244,35	*323,85*	*31,75*			

Radial shaft seals – HDSA and HDSB seals – inch dimensions
d_1 **9.750 – 15.750** in.

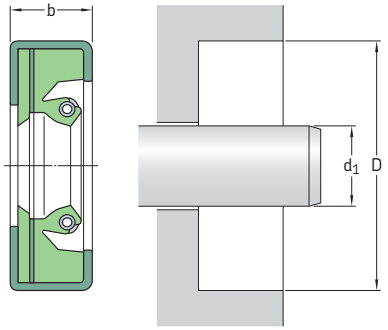

The table includes only a selection of sizes. For the full size range, please refer to **table 19** on **page 214**.

Dimensions			Design	Lip material	Designation
Shaft	Bore	Nominal seal width			
d_1	D	b			
in./*mm*			–	–	–
9.750	11.000	0.875	HDSA1	RD	**593053**
247,65	*279,40*	*22,23*			
	11.000	1.000	HDSA1	DD	**593428**
	279,40	*25,40*			
	11.125	0.875	HDSA2	DD	**594974**
	282,58	*22,23*			
	11.250	0.875	HDSA2	DD	**595514**
	285,75	*22,23*			
	11.750	1.000	HDSA1	DD	**595568**
	298,45	*25,40*			
9.875	11.875	1.000	HDSA2	RD	**592847**
250,83	*301,63*	*25,40*			
10.000	11.250	0.875	HDSA1	RD	**1000910**
254,00	*285,75*	*22,23*			
	11.250	0.875	HDSA2	VD	**1000914**
	285,75	*22,23*			
	11.500	1.250	HDSA1	RD	**1000920**
	292,10	*31,75*			
	12.000	0.875	HDSA1	RD	**1000950**
	304,80	*22,23*			
	12.000	1.250	HDSA1	RD	**1000952**
	304,80	*31,75*			
	12.000	1.250	HDSB1	RD	**1000953**
	304,80	*31,75*			
	12.000	1.500	HDSA1	RD	**1000954**
	304,80	*38,10*			
	12.500	1.000	HDSA1	RD	**1000971**
	317,50	*25,40*			
10.375	11.625	0.875	HDSA2	DD	**1037912**
263,53	*295,28*	*22,23*			

Dimensions			Design	Lip material	Designation
Shaft	Bore	Nominal seal width			
d_1	D	b			
in./*mm*			–	–	–
10.500	12.500	1.000	HDSA1	RD	**1050956**
266,70	*317,50*	*25,40*			
	12.500	1.000	HDSB1	RD	**1050958**
	317,50	*25,40*			
	12.500	1.000	HDSA1	VT	**1050966**
	317,50	*25,40*			
10.625	12.500	0.969	HDSA1	RD	**1062945**
269,88	*317,50*	*24,61*			
	13.000	1.000	HDSB1	RD	**1063971**
	330,20	*25,40*			
10.688	12.500	1.000	HDSA1	RD	**1068940**
271,48	*317,50*	*25,40*			
10.750	12.500	0.875	HDSA2	RD	**1075942**
273,05	*317,50*	*22,23*			
	13.371	1.250	HDSB1	RD	**107591**
	339,62	*31,75*			
11.000	12.500	1.250	HDSA1	RD	**1100918**
279,40	*317,50*	*31,75*			
	13.000	0.875	HDSA1	RD	**1100950**
	330,20	*22,23*			
	13.000	1.000	HDSA1	RD	**1100951**
	330,20	*25,40*			
	13.000	1.250	HDSA1	RD	**1100952**
	330,20	*31,75*			
	13.000	1.250	HDSB1	RD	**1100953**
	330,20	*31,75*			
	13.500	1.250	HDSA1	RD	**1100971**
	342,90	*31,75*			
11.417	12.994	0.875	HDSA1	VD	**1141937**
290,00	*330,00*	*22,23*			
	13.000	0.875	HDSA2	VD	**1141273**
	330,20	*22,23*			

Dimensions			Design	Lip material	Designation
Shaft d_1	Bore D	Nominal seal width b			
in./*mm*			–	–	–
11.500	13.000	0.750	HDSA1	RD	**115025**
292,10	*330,20*	*19,05*			
	13.000	0.875	HDSA1	DD	**1150925**
	330,20	*22,23*			
	13.000	1.063	HDSA1	RD	**1150920**
	330,20	*27,00*			
11.750	13.250	0.875	HDSA2	VD	**1175924**
298,45	*336,55*	*22,23*			
	13.250	0.875	HDSA2	RD	**527709**
	336,55	*22,23*			
	13.750	1.250	HDSB1	RD	**1175952**
	349,25	*31,75*			
12.000	13.500	0.875	HDSA1	RD	**1200920**
304,80	*342,90*	*22,23*			
	14.000	0.844	HDSA2	VD	**1200962**
	355,60	*21,44*			
	14.000	1.000	HDSB1	RD	**1200958**
	355,60	*25,40*			
	14.000	1.250	HDSB1	RD	**1200952**
	355,60	*31,75*			
12.250	14.250	1.250	HDSA2	RD	**1225588**
311,15	*361,95*	*20,65*			
	14.250	1.250	HDSA1	RD	**1225960**
	361,95	*31,75*			
12.500	13.750	0.906	HDSA2	RD	**1250912**
317,50	*349,25*	*23,00*			
	14.000	0.875	HDSA2	DD	**1250272**
	356,60	*22,23*			
	14.000	0.875	HDSA2	DD	**1250922**
	355,60	*22,23*			
	14.500	1.250	HDSA1	RD	**1250950**
	368,30	*31,75*			
12.750	14.750	1.250	HDSB1	RD	**1275950**
323,85	*374,65*	*31,75*			
12.875	14.125	0.875	HDSA2	RD	**1287912**
327,03	*358,78*	*22,23*			
13.000	14.500	0.875	HDSA1	RD	**1300900**
330,20	*368,30*	*22,23*			
	14.500	0.875	HDSB1	RD	**1300929**
	368,30	*22,23*			
	14.500	1.000	HDSA1	RD	**1300920**
	368,30	*25,40*			
13.250	14.750	0.906	HDSA2	DD	**1325922**
336,55	*374,65*	*23,00*			
	14.750	0.906	HDSA2	VD	**1325928**
	374,65	*23,00*			
	14.875	1.000	HDSA2	DD	**1325932**
	377,83	*25,40*			
	15.000	1.250	HDSA1	RD	**1325940**
	381,00	*31,75*			
	15.250	1.000	HDSA1	RD	**1325950**
	387,35	*25,40*			

Dimensions			Design	Lip material	Designation
Shaft d_1	Bore D	Nominal seal width b			
in./*mm*			–	–	–
13.386	15.000	0.875	HDSA2	VD	**1338273**
340,00	*381,00*	*22,23*			
13.500	15.500	0.875	HDSA2	RD	**1350954**
342,90	*393,70*	*22,23*			
	15.500	1.250	HDSB1	RD	**1350970**
	393,70	*31,75*			
	15.500	1.250	HDSB1	VD	**593517**
	393,70	*31,75*			
13.750	15.500	0.875	HDSA1	VD	**1375418**
349,25	*393,70*	*22,23*			
13.875	15.125	0.875	HDSA2	RD	**1387912**
352,43	*384,18*	*22,23*			
13.938	15.744	1.250	HDSA2	RD	**1394942**
354,03	*399,90*	*31,75*			
14.000	15.500	1.000	HDSA1	RD	**1400925**
355,60	*393,90*	*25,40*			
	16.000	1.000	HDSA1	VT	**1400957**
	406,40	*25,40*			
	16.000	1.375	HDSA1	RD	**1400950**
	406,40	*34,93*			
	16.250	1.000	HDSA2	RD	**1400965**
	412,75	*25,40*			
	16.250	1.000	HDSA2	VD	**528307**
	412,75	*25,40*			
	16.750	0.968	HDSB2	RD	**1400981**
	425,45	*24,59*			
14.250	15.750	1.000	HDSA1	RD	**1425920**
361,95	*400,05*	*25,40*			
	16.250	1.000	HDSB1	RD	**1425950**
	412,75	*25,40*			
14.400	15.587	0.875	HDSB1	RD	**1440901**
365,76	*395,91*	*22,23*			
15.000	17.000	0.875	HDSA1	RD	**1500951**
381,00	*431,80*	*22,23*			
	17.000	1.250	HDSA1	RD	**1500950**
	431,80	*31,75*			
	17.500	1.000	HDSA1	RD	**1500973**
	444,50	*25,40*			
15.125	16.375	0.875	HDSA2	RD	**1512912**
384,18	*415,93*	*22,23*			
15.313	17.313	0.813	HDSA2	RD	**592865**
388,95	*439,75*	*20,65*			
	17.313	0.875	HDSA1	RD	**1531950**
	439,75	*22,23*			
15.375	16.625	0.875	HDSA2	RD	**1537142**
390,53	*422,28*	*22,23*			
15.750	17.750	1.250	HDSA1	RD	**1575910**
400,05	*450,85*	*31,75*			

Radial shaft seals – HDSA and HDSB seals – inch dimensions
d_1 16.000 – 46.840 in.

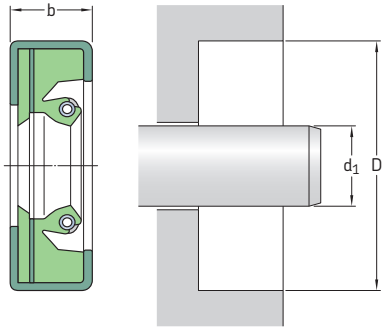

The table includes only a selection of sizes. For the full size range, please refer to **table 19** on **page 214**.

Please see **pages 74** to **76** for housing bore requirements.

Dimensions			Design	Lip material	Designation
Shaft	Bore	Nominal seal width			
d_1	D	b			
in./*mm*			–	–	–
16.000	18.000	0.875	HDSA1	RD	**1600951**
406,40	*457,20*	*22,23*			
	18.000	1.000	HDSA2	RD	**1600955**
	457,20	*25,40*			
	18.000	1.125	HDSB1	RD	**1600940**
	457,20	*28,58*			
	18.000	1.125	HDSA1	RD	**1600941**
	457,20	*28,58*			
16.375	17.562	1.000	HDSA1	RD	**1637901**
415,93	*446,07*	*25,40*			
17.000	18.250	0.875	HDSA2	RD	**1700142**
431,80	*463,55*	*22,23*			
	19.000	1.250	HDSA1	RD	**1700950**
	482,60	*31,75*			
17.500	19.000	1.250	HDSA1	RD	**1750920**
444,50	*482,60*	*31,75*			
	19.500	1.000	HDSA2	RD	**1750958**
	495,30	*25,40*			
	19.500	1.250	HDSA1	RD	**1750952**
	495,30	*31,75*			
18.000	20.000	1.500	HDSA1	RD	**1800950**
457,20	*508,00*	*38,10*			
	20.250	1.000	HDSA2	RD	**1800965**
	514,35	*25,40*			
	20.250	1.000	HDSA2	VD	**528308**
	514,35	*25,40*			
18.500	20.500	0.968	HDSA2	VD	**1850952**
469,90	*520,70*	*24,59*			
19.250	20.750	0.875	HDSA1	RD	**1925920**
488,95	*527,05*	*22,23*			

Dimensions			Design	Lip material	Designation
Shaft	Bore	Nominal seal width			
d_1	D	b			
in./*mm*			–	–	–
19.500	21.500	1.250	HDSA1	RD	**1950950**
495,30	*546,10*	*31,75*			
19.750	22.125	1.000	HDSA1	RD	**1975972**
501,65	*561,98*	*25,40*			
20.000	21.250	1.375	HDSA1	RD	**2000913**
508,00	*539,75*	*34,93*			
	21.500	0.875	HDSA1	VD	**593789**
	546,10	*22,23*			
20.438	22.500	1.000	HDSA1	RD	**2044580**
519,13	*571,50*	*25,40*			
20.500	22.000	1.500	HDSA2	RD	**2050282**
520,70	*558,80*	*38,10*			
	22.500	0.875	HDSA2	VD	**2050954**
	571,50	*22,23*			
20.750	22.750	1.250	HDSA1	RD	**2075950**
527,05	*577,85*	*31,75*			
21.000	22.250	1.375	HDSA1	RD	**2100913**
533,40	*565,15*	*34,93*			
21.250	23.000	0.875	HDSA1	RD	**2125940**
539,75	*584,20*	*22,23*			
21.500	23.500	1.000	HDSA1	RD	**594356**
546,10	*596,90*	*25,40*			
22.000	23.500	0.875	HDSA1	RD	**2200920**
558,80	*596,90*	*22,23*			
23.000	24.500	0.875	HDSB1	RD	**2300921**
584,20	*622,30*	*22,23*			

Dimensions			Design	Lip material	Designation
Shaft	Bore	Nominal seal width			
d_1	D	b			
in./*mm*			–	–	–
24.000 *609,60*	26.250 *666,75*	0.875 *22,23*	HDSA2	RD	**2400962**
24.250 *615,95*	26.250 *666,75*	0.875 *22,23*	HDSA1	VD	**2425950**
25.000	27.500 *698,50*	1.000 *25,40*	HDSB1	RD	**2500971**
32.000 *812,80*	34.000 *863,60*	0.875 *22,23*	HDSA2	DD	**3200958**
45.000 *1 143,00*	46.627 *1 184,33*	1.000 *25,40*	HDSB2	RD	**4500930**
46.840 *1 189,74*	48.000 *1 219,20*	1.188 *30,18*	HDSA2	RD	**4684912**

Radial shaft seals – HDSE1 – metric dimensions
d_1 **850** mm

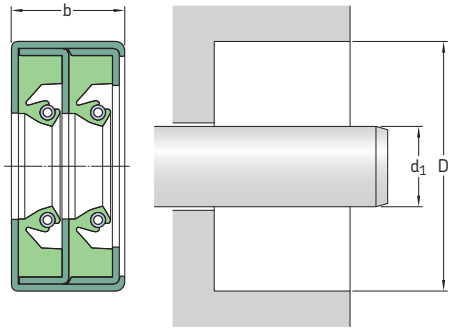

The table includes only a selection of sizes. For the full size range, please refer to **table 19** on **page 214**.

Please see **pages 74** to **76** for housing bore requirements.

Dimensions Shaft d_1	Bore D	Nominal seal width b	**Design**	**Lip material**	**Designation**
mm			–	–	–
850	910	50	HDSE1	RR	**850×910×50 HDSE1 RR**

Radial shaft seals – HDSD and HDSE seals – inch dimensions
d_1 **18.000 – 63.130** in.

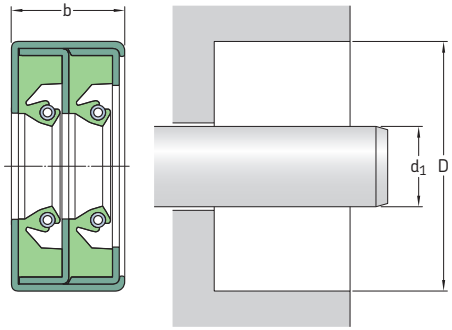

The table includes only a selection of sizes. For the full size range, please refer to **table 19** on **page 214**.

Please see **pages 74** to **76** for housing bore requirements.

Dimensions Shaft d_1	Bore D	Nominal seal width b	**Design**	**Lip material**	**Designation**
in./*mm*			–	–	–
18.000	20.000	1.250	HDSD2	RR	**1800570**
457,20	*508,00*	*31,75*			
	20.000	1.500	HDSD1	RR	**1800956**
	508,00	*38,10*			
	20.250	1.250	HDSE2	RR	**1800966**
	514,35	*31,75*			
18.500	20.000	1.250	HDSD2	RR	**1850922**
469,90	*508,00*	*31,75*			
19.125	21.250	1.750	HDSD1	RR	**1913960**
485,78	*539,75*	*44,45*			
20.000	22.000	1.813	HDSE1	RR	**2000951**
508,00	*558,80*	*46,05*			
21.750	24.750	1.500	HDSD1	RR	**2175920**
552,45	*628,65*	*38,10*			
	24.750	1.500	HDSD2	VV	**2175992**
	628,65	*38,10*			
	24.750	1.500	HDSD1	VV	**2175997**
	628,65	*38,10*			
	24.750	1.500	HDSE1	VV	**2175998**
	628,65	*38,10*			
22.000	24.000	1.250	HDSD1	RR	**2200953**
558,80	*609,60*	*31,75*			
	24.000	1.250	HDSE2	DD	**2200958**
	609,60	*31,75*			
	24.000	1.250	HDSD2	DD	**2200962**
	609,60	*31,75*			
23.000	24.750	1.250	HDSE1	VV	**2300983**
584,20	*628,65*	*31,75*			
23.500	25.500	1.250	HDSD2	RR	**2350955**
596,90	*647,70*	*31,75*			
25.500	28.500	1.250	HDSD2	RR	**2550912**
647,70	*723,90*	*31,75*			

Dimensions			Design	Lip material	Designation
Shaft d_1	Bore D	Nominal seal width b			
in./*mm*			–	–	–
27.000 *685,80*	29.000 *736,60*	1.875 *47,63*	HDSE2	DD	**2700953**
27.688 *703,28*	29.812 *757,23*	1.250 *31,75*	HDSE2	RR	**2769915**
28.000 *711,20*	31.000 *787,40*	1.250 *31,75*	HDSD2	DD	**2800998**
29.000 *736,60*	31.000 *787,40*	1.750 *44,45*	HDSD1	RR	**2900954**
31.000 *787,40*	34.000 *863,60*	1.250 *31,75*	HDSD2	RR	**3100992**
33.000 *838,20*	34.500 *876,30*	1.250 *31,75*	HDSD1	RR	**3300920**
	34.500 *876,30*	1.250 *31,75*	HDSE1	RR	**3300921**
33.500 *850,90*	35.500 *901,70*	1.750 *44,45*	HDSE1	RR	**3350950**
35.500 *901,70*	38.000 *965,20*	1.250 *31,75*	HDSE2	VV	**3550974**
36.000 *914,40*	38.000 *965,20*	1.500 *38,10*	HDSE2	RR	**3600954**
38.000 *965,20*	40.000 *1 016,00*	1.313 *33,35*	HDSE1	RR	**3800950**
63.130 *1 603,50*	64.625 *1 641,48*	1.375 *34,93*	HDSD1	RD	**6313922**

Radial shaft seals – SBF – metric dimensions
d_1 **175 – 900** mm

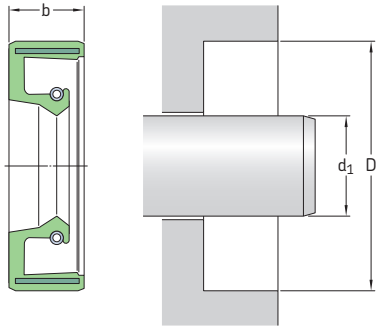

The table includes only a selection of available sizes. Contact your SKF sales representative for more information.

Please see **pages 74** to **76** for housing bore requirements.

Dimensions Shaft d_1	Bore D	Nominal seal width b	**Designations** Lip material R	V
mm			–	
175	205	15	**175×205×15 SBF R**	**175×205×15 SBF V**
230	260	15	**230×260×15 SBF R**	**230×260×15 SBF V**
240	270	15	**240×270×15 SBF R**	**240×270×15 SBF V**
	280	16	**240×280×16 SBF R**	**240×280×16 SBF V**
245	275	16	**245×275×16 SBF R**	**245×275×16 SBF V**
260	290	16	**260×290×16 SBF R**	**260×290×16 SBF V**
	310	16	**260×310×16 SBF R**	**260×310×16 SBF V**
270	235	16	**270×235×16 SBF R**	**270×235×16 SBF V**
290	330	18	**290×330×18 SBF R**	**290×330×18 SBF V**
	334	20	**290×334×20 SBF R**	**290×334×20 SBF V**
300	344	20	**300×344×20 SBF R**	**300×344×20 SBF V**
316	360	20	**316×360×20 SBF R**	**316×360×20 SBF V**
325	365	16	**325×365×16 SBF R**	**325×365×16 SBF V**
340	380	20	**340×380×20 SBF R**	**340×380×20 SBF V**
360	400	20	**360×400×20 SBF R**	**360×400×20 SBF V**
385	430	25	**385×430×25 SBF R**	**385×430×25 SBF V**
390	430	20	**390×430×20 SBF R**	**390×430×20 SBF V**
400	440	20	**400×440×20 SBF R**	**400×440×20 SBF V**
430	480	22	**430×480×22 SBF R**	**430×480×22 SBF V**
440	490	25	**440×490×25 SBF R**	**440×490×25 SBF V**
450	500	25	**450×500×25 SBF R**	**450×500×25 SBF V**
900	960	27	**900×960×27 SBF R**	**900×960×27 SBF V**

Radial shaft seals – SBF – inch dimensions
d_1 **11.000 – 27.500** in.

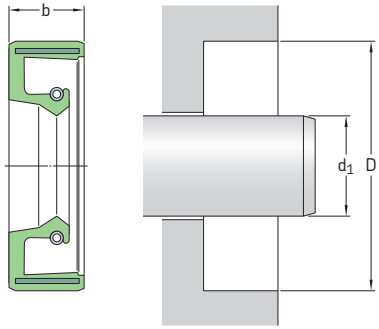

The table includes only a selection of available sizes. Contact your SKF sales representative for more information.

Please see **pages 74** to **76** for housing bore requirements.

Dimensions Shaft d_1	Bore D	Nominal seal width b	**Designations** Lip material R	V
in./*mm*			–	
11.000 *279,40*	12.500 *317,50*	0.625 *15,88*	**SBF 5809 R**	**SBF 5809 V**
20.500 *520,70*	22.500 *571,50*	0.875 *22,23*	**SBF 7083 R**	**SBF 7083 V**
21.500 *546,10*	23.469 *596,10*	0.875 *22,23*	**SBF 7175 R**	**SBF 7175 V**
23.000 *584,20*	24.500 *622,30*	0.750 *19,05*	**SBF 7270 R**	**SBF 7270 V**
27.500 *698,50*	29.500 *749,30*	1.000 *25,40*	**SBF 7406 R**	**SBF 7406 V**

Radial shaft seals – HSF1 (split) and HSF5 (solid) – metric dimensions
d_1 **40 – 215** mm

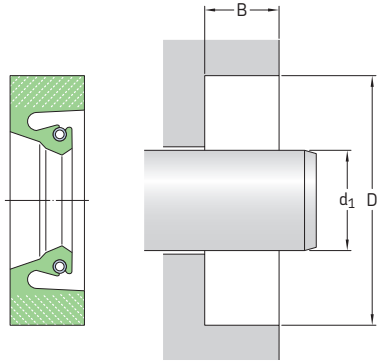

The table includes only a selection of available sizes. Contact your SKF sales representative for more information.

Please see **pages 74** to **76** for housing bore requirements.

Dimensions Shaft diameter d_1	Bore diameter D	Bore depth B	**Designations** Split version (HSF1) Lip material R, V	Solid version (HSF5) Lip material R, V
mm			–	
40	60	10	**40×60×10 HSF1 R** **40×60×10 HSF1 V**	**40×60×10 HSF5 R** **40×60×10 HSF5 V**
55	80	12,20	**55×80×12 HSF1 R** **55×80×12 HSF1 V**	**55×80×12 HSF5 R** **55×80×12 HSF5 V**
60	80	10	**60×80×10 HSF1 R** **60×80×10 HSF1 V**	**60×80×10 HSF5 R** **60×80×10 HSF5 V**
70	102	12,50	**70×102×13 HSF1 R** **70×102×13 HSF1 V**	**70×102×13 HSF5 R** **70×102×13 HSF5 V**
80	100	8	**80×100×8 HSF1 R** **80×100×8 HSF1 V**	**80×100×8 HSF5 R** **80×100×8 HSF5 V**
	112	12,50	**80×112×13 HSF1 R** **80×112×13 HSF1 V**	**80×112×13 HSF5 R** **80×112×13 HSF5 V**
84	100	8	**84×100×8 HSF1 R** **84×100×8 HSF1 V**	**84×100×8 HSF5 R** **84×100×8 HSF5 V**
85	101	8	**85×101×8 HSF1 R** **85×101×8 HSF1 V**	**85×101×8 HSF5 R** **85×101×8 HSF5 V**
	120	12	**85×120×12 HSF1 R** **85×120×12 HSF1 V**	**85×120×12 HSF5 R** **85×120×12 HSF5 V**
90	110	12	**90×110×12 HSF1 R** **90×110×12 HSF1 V**	**90×110×12 HSF5 R** **90×110×12 HSF5 V**
100	116	8	**100×116×8 HSF1 R** **100×116×8 HSF1 V**	**100×116×8 HSF5 R** **100×116×8 HSF5 V**
	130	10	**100×130×10 HSF1 R** **100×130×10 HSF1 V**	**100×130×10 HSF5 R** **100×130×10 HSF5 V**
110	130	12	**110×130×12 HSF1 R** **110×130×12 HSF1 V**	**110×130×12 HSF5 R** **110×130×12 HSF5 V**
120	150	13	**120×150×13 HSF1 R** **120×150×13 HSF1 V**	**120×150×13 HSF5 R** **120×150×13 HSF5 V**

Dimensions			Designations	
Shaft diameter d_1	Bore diameter D	Bore depth B	Split version (HSF1) Lip material R, V	Solid version (HSF5) Lip material R, V
mm			–	
125	155	12,50	**125×155×13 HSF1 R**	**125×155×13 HSF5 R**
			125×155×13 HSF1 V	**125×155×13 HSF5 V**
	160	12	**125×160×12 HSF1 R**	**125×160×12 HSF5 R**
			125×160×12 HSF1 V	**125×160×12 HSF5 V**
127	165	16	**127×165×16 HSF1 R**	**127×165×16 HSF5 R**
			127×165×16 HSF1 V	**127×165×16 HSF5 V**
135	160	12	**135×160×12 HSF1 R**	**135×160×12 HSF5 R**
			135×160×12 HSF1 V	**135×160×12 HSF5 V**
140	170	12	**140×170×12 HSF1 R**	**140×170×12 HSF5 R**
			140×170×12 HSF1 V	**140×170×12 HSF5 V**
145	180	14	**145×180×14 HSF1 R**	**145×180×14 HSF5 R**
			145×180×14 HSF1 V	**145×180×14 HSF5 V**
150	180	12	**150×180×12 HSF1 R**	**150×180×12 HSF5 R**
			150×180×12 HSF1 V	**150×180×12 HSF5 V**
160	190	15	**160×190×15 HSF1 R**	**160×190×15 HSF5 R**
			160×190×15 HSF1 V	**160×190×15 HSF5 V**
	200	10	**160×200×10 HSF1 R**	**160×200×10 HSF5 R**
			160×200×10 HSF1 V	**160×200×10 HSF5 V**
170	200	12	**170×200×12 HSF1 R**	**170×200×12 HSF5 R**
			170×200×12 HSF1 V	**170×200×12 HSF5 V**
	200	16	**170×200×16 HSF1 R**	**170×200×16 HSF5 R**
			170×200×16 HSF1 V	**170×200×16 HSF5 V**
	211	16	**170×211×16 HSF1 R**	**170×211×16 HSF5 R**
			170×211×16 HSF1 V	**170×211×16 HSF5 V**
175	200	15	**175×200×15 HSF1 R**	**175×200×15 HSF5 R**
			175×200×15 HSF1 V	**175×200×15 HSF5 V**
180	200	15	**180×200×15 HSF1 R**	**180×200×15 HSF5 R**
			180×200×15 HSF1 V	**180×200×15 HSF5 V**
	222	16	**180×222×16 HSF1 R**	**180×222×16 HSF5 R**
			180×222×16 HSF1 V	**180×222×16 HSF5 V**
185	225	16	**185×225×16 HSF1 R**	**185×225×16 HSF5 R**
			185×225×16 HSF1 V	**185×225×16 HSF5 V**
190	220	15	**190×220×15 HSF1 R**	**190×220×15 HSF5 R**
			190×220×15 HSF1 V	**190×220×15 HSF5 V**
	225	18	**190×225×18 HSF1 R**	**190×225×18 HSF5 R**
			190×225×18 HSF1 V	**190×225×18 HSF5 V**
	230	16	**190×230×16 HSF1 R**	**190×230×16 HSF5 R**
			190×230×16 HSF1 V	**190×230×16 HSF5 V**
200	240	16	**200×240×16 HSF1 R**	**200×240×16 HSF5 R**
			200×240×16 HSF1 V	**200×240×16 HSF5 V**
	250	18	**200×250×18 HSF1 R**	**200×250×18 HSF5 R**
			200×250×18 HSF1 V	**200×250×18 HSF5 V**
210	240	12	**210×240×12 HSF1 R**	**210×240×12 HSF5 R**
			210×240×12 HSF1 V	**210×240×12 HSF5 V**
	250	16	**210×250×16 HSF1 R**	**210×250×16 HSF5 R**
			210×250×16 HSF1 V	**210×250×16 HSF5 V**
215	248	15	**215×248×15 HSF1 R**	**215×248×15 HSF5 R**
			215×248×15 HSF1 V	**215×248×15 HSF5 V**
	250	16	**215×250×16 HSF1 R**	**215×250×16 HSF5 R**
			215×250×16 HSF1 V	**215×250×16 HSF5 V**

Radial shaft seals – HSF1 (split) and HSF5 (solid) – metric dimensions
d_1 **220 – 335** mm

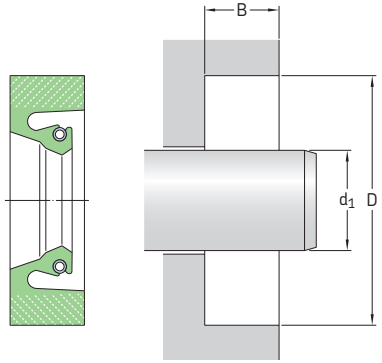

The table includes only a selection of available sizes. Contact your SKF sales representative for more information.

Please see **pages 74** to **76** for housing bore requirements.

Dimensions Shaft diameter d_1	Bore diameter D	Bore depth B	**Designations** Split version (HSF1) Lip material R, V	Solid version (HSF5) Lip material R, V
mm			–	
220	180	16	**220×180×16 HSF1 R**	**220×180×16 HSF5 R**
			220×180×16 HSF1 V	**220×180×16 HSF5 V**
	260	16	**220×260×16 HSF1 R**	**220×260×16 HSF5 R**
			220×260×16 HSF1 V	**220×260×16 HSF5 V**
226	276	22,22	**226×276×22 HSF1 R**	**226×276×22 HSF5 R**
			226×276×22 HSF1 V	**226×276×22 HSF5 V**
230	260	15	**230×260×15 HSF1 R**	**230×260×15 HSF5 R**
			230×260×15 HSF1 V	**230×260×15 HSF5 V**
	270	16	**230×270×16 HSF1 R**	**230×270×16 HSF5 R**
			230×270×16 HSF1 V	**230×270×16 HSF5 V**
235	265	15	**235×265×15 HSF1 R**	**235×265×15 HSF5 R**
			235×265×15 HSF1 V	**235×265×15 HSF5 V**
	275	20	**235×275×20 HSF1 R**	**235×275×20 HSF5 R**
			235×275×20 HSF1 V	**235×275×20 HSF5 V**
236	276	16	**236×276×16 HSF1 R**	**236×276×16 HSF5 R**
			236×276×16 HSF1 V	**236×276×16 HSF5 V**
240	275	18	**240×275×18 HSF1 R**	**240×275×18 HSF5 R**
			240×275×18 HSF1 V	**240×275×18 HSF5 V**
	280	18	**240×280×18 HSF1 R**	**240×280×18 HSF5 R**
			240×280×18 HSF1 V	**240×280×18 HSF5 V**
	290	25	**240×290×25 HSF1 R**	**240×290×25 HSF5 R**
			240×290×25 HSF1 V	**240×290×25 HSF5 V**
250	280	15	**250×280×15 HSF1 R**	**250×280×15 HSF5 R**
			250×280×15 HSF1 V	**250×280×15 HSF5 V**
	290	16,50	**250×290×17 HSF1 R**	**250×290×17 HSF5 R**
			250×290×17 HSF1 V	**250×290×17 HSF5 V**
260	290	16	**260×290×16 HSF1 R**	**260×290×16 HSF5 R**
			260×290×16 HSF1 V	**260×290×16 HSF5 V**
	304	20	**260×304×20 HSF1 R**	**260×304×20 HSF5 R**
			260×304×20 HSF1 V	**260×304×20 HSF5 V**
270	310	15	**270×310×15 HSF1 R**	**270×310×15 HSF5 R**
			270×310×15 HSF1 V	**270×310×15 HSF5 V**
	314	20	**270×314×20 HSF1 R**	**270×314×20 HSF5 R**
			270×314×20 HSF1 V	**270×314×20 HSF5 V**

Dimensions			Designations	
Shaft diameter d_1	Bore diameter D	Bore depth B	Split version (HSF1) Lip material R, V	Solid version (HSF5) Lip material R, V
mm			–	
275	315	20	**275×315×20 HSF1 R**	**275×315×20 HSF5 R**
			275×315×20 HSF1 V	**275×315×20 HSF5 V**
280	320	16	**280×320×16 HSF1 R**	**280×320×16 HSF5 R**
			280×320×16 HSF1 V	**280×320×16 HSF5 V**
	320	20	**280×320×20 HSF1 R**	**280×320×20 HSF5 R**
			280×320×20 HSF1 V	**280×320×20 HSF5 V**
	324	20	**280×324×20 HSF1 R**	**280×324×20 HSF5 R**
			280×324×20 HSF1 V	**280×324×20 HSF5 V**
285	310	15	**285×310×15 HSF1 R**	**285×310×15 HSF5 R**
			285×310×15 HSF1 V	**285×310×15 HSF5 V**
289	327	19	**289×327×19 HSF1 R**	**289×327×19 HSF5 R**
			289×327×19 HSF1 V	**289×327×19 HSF5 V**
290	330	20	**290×330×20 HSF1 R**	**290×330×20 HSF5 R**
			290×330×20 HSF1 V	**290×330×20 HSF5 V**
	334	20	**290×334×20 HSF1 R**	**290×334×20 HSF5 R**
			290×334×20 HSF1 V	**290×334×20 HSF5 V**
292	330	15,87	**292×330×16 HSF1 R**	**292×330×16 HSF5 R**
			292×330×16 HSF1 V	**292×330×16 HSF5 V**
300	340	16,50	**300×340×17 HSF1 R**	**300×340×17 HSF5 R**
			300×340×17 HSF1 V	**300×340×17 HSF5 V**
	340	20	**300×340×20 HSF1 R**	**300×340×20 HSF5 R**
			300×340×20 HSF1 V	**300×340×20 HSF5 V**
304	348	20	**304×348×20 HSF1 R**	**304×348×20 HSF5 R**
			304×348×20 HSF1 V	**304×348×20 HSF5 V**
308	352	20	**308×352×20 HSF1 R**	**308×352×20 HSF5 R**
			308×352×20 HSF1 V	**308×352×20 HSF5 V**
310	345	18	**310×345×18 HSF1 R**	**310×345×18 HSF5 R**
			310×345×18 HSF1 V	**310×345×18 HSF5 V**
	354	20,50	**310×354×21 HSF1 R**	**310×354×21 HSF5 R**
			310×354×21 HSF1 V	**310×354×21 HSF5 V**
311	345	18,30	**311×345×18 HSF1 R**	**311×345×18 HSF5 R**
			311×345×18 HSF1 V	**311×345×18 HSF5 V**
314	355	20	**314×355×20 HSF1 R**	**314×355×20 HSF5 R**
			314×355×20 HSF1 V	**314×355×20 HSF5 V**
316	360	20	**316×360×20 HSF1 R**	**316×360×20 HSF5 R**
			316×360×20 HSF1 V	**316×360×20 HSF5 V**
320	350	15	**320×350×15 HSF1 R**	**320×350×15 HSF5 R**
			320×350×15 HSF1 V	**320×350×15 HSF5 V**
	360	18	**320×360×18 HSF1 R**	**320×360×18 HSF5 R**
			320×360×18 HSF1 V	**320×360×18 HSF5 V**
328	372	20,20	**328×372×20 HSF1 R**	**328×372×20 HSF5 R**
			328×372×20 HSF1 V	**328×372×20 HSF5 V**
330	370	18	**330×370×18 HSF1 R**	**330×370×18 HSF5 R**
			330×370×18 HSF1 V	**330×370×18 HSF5 V**
	374	20	**330×374×20 HSF1 R**	**330×374×20 HSF5 R**
			330×374×20 HSF1 V	**330×374×20 HSF5 V**
335	373	19	**335×373×19 HSF1 R**	**335×373×19 HSF5 R**
			335×373×19 HSF1 V	**335×373×19 HSF5 V**

Radial shaft seals – HSF1 (split) and HSF5 (solid) – metric dimensions
d_1 **340 – 530** mm

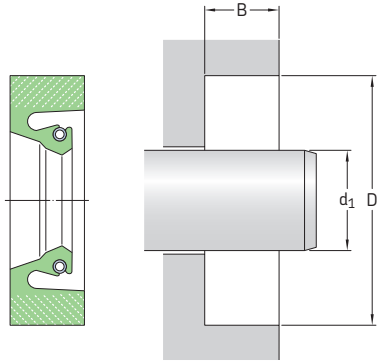

The table includes only a selection of available sizes. Contact your SKF sales representative for more information.

Please see **pages 74** to **76** for housing bore requirements.

Dimensions			**Designations**	
Shaft diameter d_1	Bore diameter D	Bore depth B	Split version (HSF1) Lip material R, V	Solid version (HSF5) Lip material R, V
mm			–	
340	380	16	**CR340×380×16 HSF1 R**	**340×380×16 HSF5 R**
			340×380×16 HSF1 V	**340×380×16 HSF5 V**
	380	20	**340×380×20 HSF1 R**	**340×380×20 HSF5 R**
			340×380×20 HSF1 V	**340×380×20 HSF5 V**
350	380	17,70	**350×380×18 HSF1 R**	**350×380×18 HSF5 R**
			350×380×18 HSF1 V	**350×380×18 HSF5 V**
	394	20	**350×394×20 HSF1 R**	**350×394×20 HSF5 R**
			350×394×20 HSF1 V	**350×394×20 HSF5 V**
360	404	20	**360×404×20 HSF1 R**	**360×404×20 HSF5 R**
			360×404×20 HSF1 V	**360×404×20 HSF5 V**
	410	20	**360×410×20 HSF1 R**	**360×410×20 HSF5 R**
			360×410×20 HSF1 V	**360×410×20 HSF5 V**
362	400	20	**362×400×20 HSF1 R**	**362×400×20 HSF5 R**
			362×400×20 HSF1 V	**362×400×20 HSF5 V**
	406	22	**362×406×22 HSF1 R**	**362×406×22 HSF5 R**
			362×406×22 HSF1 V	**362×406×22 HSF5 V**
370	410	20	**370×410×20 HSF1 R**	**370×410×20 HSF5 R**
			370×410×20 HSF1 V	**370×410×20 HSF5 V**
	414	20	**370×414×20 HSF1 R**	**370×414×20 HSF5 R**
			370×414×20 HSF1 V	**370×414×20 HSF5 V**
380	420	20	**380×420×20 HSF1 R**	**380×420×20 HSF5 R**
			380×420×20 HSF1 V	**380×420×20 HSF5 V**
387	431	22,50	**387×431×23 HSF1 R**	**387×431×23 HSF5 R**
			387×431×23 HSF1 V	**387×431×23 HSF5 V**
	438	25,40	**387×438×25 HSF1 R**	**387×438×25 HSF5 R**
			387×438×25 HSF1 V	**387×438×25 HSF5 V**
390	430	20	**390×430×20 HSF1 R**	**390×430×20 HSF5 R**
			390×430×20 HSF1 V	**390×430×20 HSF5 V**
395	439	20	**395×439×20 HSF1 R**	**395×439×20 HSF5 R**
			395×439×20 HSF1 V	**395×439×20 HSF5 V**
	439	20,50	**395×439×21 HSF1 R**	**395×439×21 HSF5 R**
			395×439×21 HSF1 V	**395×439×21 HSF5 V**

Dimensions			Designations	
Shaft diameter d_1	Bore diameter D	Bore depth B	Split version (HSF1) Lip material R, V	Solid version (HSF5) Lip material R, V
mm			–	
400	440	20	**400×440×20 HSF1 R**	**400×440×20 HSF5 R**
			400×440×20 HSF1 V	**400×440×20 HSF5 V**
	450	22	**400×450×22 HSF1 R**	**400×450×22 HSF5 R**
			400×450×22 HSF1 V	**400×450×22 HSF5 V**
420	460	20	**420×460×20 HSF1 R**	**420×460×20 HSF5 R**
			420×460×20 HSF1 V	**420×460×20 HSF5 V**
	470	25	**420×470×25 HSF1 R**	**420×470×25 HSF5 R**
			420×470×25 HSF1 V	**420×470×25 HSF5 V**
430	480	25	**430×480×25 HSF1 R**	**430×480×25 HSF5 R**
			430×480×25 HSF1 V	**430×480×25 HSF5 V**
435	485	22	**435×485×22 HSF1 R**	**435×485×22 HSF5 R**
			435×485×22 HSF1 V	**435×485×22 HSF5 V**
438	476	24	**438×476×24 HSF1 R**	**438×476×24 HSF5 R**
			438×476×24 HSF1 V	**438×476×24 HSF5 V**
440	480	20	**440×480×20 HSF1 R**	**440×480×20 HSF5 R**
			440×480×20 HSF1 V	**440×480×20 HSF5 V**
	490	20	**440×490×20 HSF1 R**	**440×490×20 HSF5 R**
			440×490×20 HSF1 V	**440×490×20 HSF5 V**
446	486	16,50	**446×486×17 HSF1 R**	**446×486×17 HSF5 R**
			446×486×17 HSF1 V	**446×486×17 HSF5 V**
450	490	18	**450×490×18 HSF1 R**	**450×490×18 HSF5 R**
			450×490×18 HSF1 V	**450×490×18 HSF5 V**
	500	22	**450×500×22 HSF1 R**	**450×500×22 HSF5 R**
			450×500×22 HSF1 V	**450×500×22 HSF5 V**
460	510	22	**460×510×22 HSF1 R**	**460×510×22 HSF5 R**
			460×510×22 HSF1 V	**460×510×22 HSF5 V**
	510	25	**460×510×25 HSF1 R**	**460×510×25 HSF5 R**
			460×510×25 HSF1 V	**460×510×25 HSF5 V**
470	520	25	**470×520×25 HSF1 R**	**470×520×25 HSF5 R**
			470×520×25 HSF1 V	**470×520×25 HSF5 V**
480	520	18	**480×520×18 HSF1 R**	**480×520×18 HSF5 R**
			480×520×18 HSF1 V	**480×520×18 HSF5 V**
	530	22	**480×530×22 HSF1 R**	**480×530×22 HSF5 R**
			480×530×22 HSF1 V	**480×530×22 HSF5 V**
	550	25	**480×550×25 HSF1 R**	**480×550×25 HSF5 R**
			480×550×25 HSF1 V	**480×550×25 HSF5 V**
495	545	22	**495×545×22 HSF1 R**	**495×545×22 HSF5 R**
			495×545×22 HSF1 V	**495×545×22 HSF5 V**
500	540	10	**500×540×10 HSF1 R**	**500×540×10 HSF5 R**
			500×540×10 HSF1 V	**500×540×10 HSF5 V**
	550	20	**500×550×20 HSF1 R**	**500×550×20 HSF5 R**
			500×550×20 HSF1 V	**500×550×20 HSF5 V**
520	560	18	**520×560×18 HSF1 R**	**520×560×18 HSF5 R**
			520×560×18 HSF1 V	**520×560×18 HSF5 V**
	560	20	**520×560×20 HSF1 R**	**520×560×20 HSF5 R**
			520×560×20 HSF1 V	**520×560×20 HSF5 V**
525	575	22	**525×575×22 HSF1 R**	**525×575×22 HSF5 R**
			525×575×22 HSF1 V	**525×575×22 HSF5 V**
530	580	22	**530×580×22 HSF1 R**	**530×580×22 HSF5 R**
			530×580×22 HSF1 V	**530×580×22 HSF5 V**
	580	25	**530×580×25 HSF1 R**	**530×580×25 HSF5 R**
			530×580×25 HSF1 V	**530×580×25 HSF5 V**

Radial shaft seals – HSF1 (split) and HSF5 (solid) – metric dimensions
d_1 **535 – 840** mm

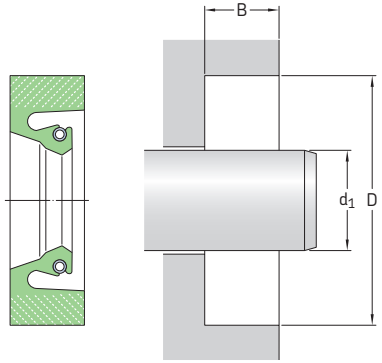

The table includes only a selection of available sizes. Contact your SKF sales representative for more information.

Please see **pages 74** to **76** for housing bore requirements.

Dimensions			**Designations**	
Shaft diameter d_1	Bore diameter D	Bore depth B	Split version (HSF1) Lip material R, V	Solid version (HSF5) Lip material R, V
mm			–	
535	585	22	**535×585×22 HSF1 R**	**535×585×22 HSF5 R**
			535×585×22 HSF1 V	**535×585×22 HSF5 V**
540	590	22	**540×590×22 HSF1 R**	**540×590×22 HSF5 R**
			540×590×22 HSF1 V	**540×590×22 HSF5 V**
	590	30	**540×590×30 HSF1 R**	**540×590×30 HSF5 R**
			540×590×30 HSF1 V	**540×590×30 HSF5 V**
550	600	22,30	**550×600×22 HSF1 R**	**550×600×22 HSF5 R**
			550×600×22 HSF1 V	**550×600×22 HSF5 V**
560	604	20	**560×604×20 HSF1 R**	**560×604×20 HSF5 R**
			560×604×20 HSF1 V	**560×604×20 HSF5 V**
	610	22,30	**560×610×22 HSF1 R**	**560×610×22 HSF5 R**
			560×610×22 HSF1 V	**560×610×22 HSF5 V**
570	616	19	**570×616×19 HSF1 R**	**570×616×19 HSF5 R**
			570×616×19 HSF1 V	**570×616×19 HSF5 V**
	620	25	**570×620×25 HSF1 R**	**570×620×25 HSF5 R**
			570×620×25 HSF1 V	**570×620×25 HSF5 V**
575	625	22	**575×625×22 HSF1 R**	**575×625×22 HSF5 R**
			575×625×22 HSF1 V	**575×625×22 HSF5 V**
580	630	22	**580×630×22 HSF1 R**	**580×630×22 HSF5 R**
			580×630×22 HSF1 V	**580×630×22 HSF5 V**
600	650	22	**600×650×22 HSF1 R**	**600×650×22 HSF5 R**
			600×650×22 HSF1 V	**600×650×22 HSF5 V**
620	670	22	**620×670×22 HSF1 R**	**620×670×22 HSF5 R**
			620×670×22 HSF1 V	**620×670×22 HSF5 V**
	684	25	**620×684×25 HSF1 R**	**620×684×25 HSF5 R**
			620×684×25 HSF1 V	**620×684×25 HSF5 V**
625	689	25	**625×689×25 HSF1 R**	**625×689×25 HSF5 R**
			625×689×25 HSF1 V	**625×689×25 HSF5 V**
630	690	30	**630×690×30 HSF1 R**	**630×690×30 HSF5 R**
			630×690×30 HSF1 V	**630×690×30 HSF5 V**

Dimensions			Designations	
Shaft diameter d_1	Bore diameter D	Bore depth B	Split version (HSF1) Lip material R, V	Solid version (HSF5) Lip material R, V
mm			–	
635	705	30	**635×705×30 HSF1 R** **635×705×30 HSF1 V**	**635×705×30 HSF5 R** **635×705×30 HSF5 V**
650	690	18	**650×690×18 HSF1 R** **650×690×18 HSF1 V**	**650×690×18 HSF5 R** **650×690×18 HSF5 V**
660	724	25	**660×724×25 HSF1 R** **660×724×25 HSF1 V**	**660×724×25 HSF5 R** **660×724×25 HSF5 V**
670	734	25	**670×734×25 HSF1 R** **670×734×25 HSF1 V**	**670×734×25 HSF5 R** **670×734×25 HSF5 V**
685	749	25	**685×749×25 HSF1 R** **685×749×25 HSF1 V**	**685×749×25 HSF5 R** **685×749×25 HSF5 V**
700	760	30	**700×760×30 HSF1 R** **700×760×30 HSF1 V**	**700×760×30 HSF5 R** **700×760×30 HSF5 V**
710	770	30	**710×770×30 HSF1 R** **710×770×30 HSF1 V**	**710×770×30 HSF5 R** **710×770×30 HSF5 V**
	774	25	**710×774×25 HSF1 R** **710×774×25 HSF1 V**	**710×774×25 HSF5 R** **710×774×25 HSF5 V**
730	794	25	**730×794×25 HSF1 R** **730×794×25 HSF1 V**	**730×794×25 HSF5 R** **730×794×25 HSF5 V**
736	800	25	**736×800×25 HSF1 R** **736×800×25 HSF1 V**	**736×800×25 HSF5 R** **736×800×25 HSF5 V**
740	785	18	**740×785×18 HSF1 R** **740×785×18 HSF1 V**	**740×785×18 HSF5 R** **740×785×18 HSF5 V**
744	808	25	**744×808×25 HSF1 R** **744×808×25 HSF1 V**	**744×808×25 HSF5 R** **744×808×25 HSF5 V**
750	810	30	**750×810×30 HSF1 R** **750×810×30 HSF1 V**	**750×810×30 HSF5 R** **750×810×30 HSF5 V**
	814	25	**750×814×25 HSF1 R** **750×814×25 HSF1 V**	**750×814×25 HSF5 R** **750×814×25 HSF5 V**
760	820	30	**760×820×30 HSF1 R** **760×820×30 HSF1 V**	**760×820×30 HSF5 R** **760×820×30 HSF5 V**
770	834	25	**770×834×25 HSF1 R** **770×834×25 HSF1 V**	**770×834×25 HSF5 R** **770×834×25 HSF5 V**
780	844	25	**780×844×25 HSF1 R** **780×844×25 HSF1 V**	**780×844×25 HSF5 R** **780×844×25 HSF5 V**
790	850	30	**790×850×30 HSF1 R** **790×850×30 HSF1 V**	**790×850×30 HSF5 R** **790×850×30 HSF5 V**
800	860	30	**800×860×30 HSF1 R** **800×860×30 HSF1 V**	**800×860×30 HSF5 R** **800×860×30 HSF5 V**
	865	25	**800×865×25 HSF1 R** **800×865×25 HSF1 V**	**800×865×25 HSF5 R** **800×865×25 HSF5 V**
810	860	25	**810×860×25 HSF1 R** **810×860×25 HSF1 V**	**810×860×25 HSF5 R** **810×860×25 HSF5 V**
	874	22	**810×874×22 HSF1 R** **810×874×22 HSF1 V**	**810×874×22 HSF5 R** **810×874×22 HSF5 V**
840	904	25	**840×904×25 HSF1 R** **840×904×25 HSF1 V**	**840×904×25 HSF5 R** **840×904×25 HSF5 V**

Radial shaft seals – HSF1 (split) and HSF5 (solid) – metric dimensions
d_1 **850 – 1 110** mm

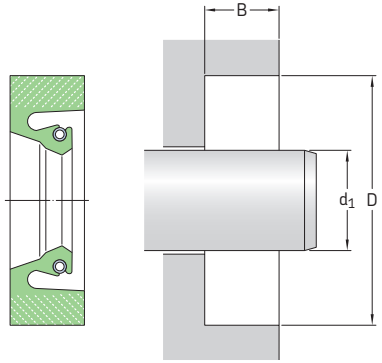

The table includes only a selection of available sizes. Contact your SKF sales representative for more information.

Please see **pages 74** to **76** for housing bore requirements.

Dimensions Shaft diameter d_1	Bore diameter D	Bore depth B	**Designations** Split version (HSF1) Lip material R, V	Solid version (HSF5) Lip material R, V
mm			–	
850	900	22	**850×900×22 HSF1 R**	**850×900×22 HSF5 R**
			850×900×22 HSF1 V	**850×900×22 HSF5 V**
	904	25	**850×904×25 HSF1 R**	**850×904×25 HSF5 R**
			850×904×25 HSF1 V	**850×904×25 HSF5 V**
	910	30	**850×910×30 HSF1 R**	**850×910×30 HSF5 R**
			850×910×30 HSF1 V	**850×910×30 HSF5 V**
900	960	30	**900×960×30 HSF1 R**	**900×960×30 HSF5 R**
			900×960×30 HSF1 V	**900×960×30 HSF5 V**
	964	32	**900×964×32 HSF1 R**	**900×964×32 HSF5 R**
			900×964×32 HSF1 V	**900×964×32 HSF5 V**
910	974	25	**910×974×25 HSF1 R**	**910×974×25 HSF5 R**
			910×974×25 HSF1 V	**910×974×25 HSF5 V**
	974	25,40	**910×974×25 HSF1 R**	**910×974×25 HSF5 R**
			910×974×25 HSF1 V	**910×974×25 HSF5 V**
920	984	25	**920×984×25 HSF1 R**	**920×984×25 HSF5 R**
			920×984×25 HSF1 V	**920×984×25 HSF5 V**
950	1 000	25	**950×1000×25 HSF1 R**	**950×1000×25 HSF5 R**
			950×1000×25 HSF1 V	**950×1000×25 HSF5 V**
	1 010	30	**950×1010×30 HSF1 R**	**950×1010×30 HSF5 R**
			950×1010×30 HSF1 V	**950×1010×30 HSF5 V**
960	1 024	25	**960×1024×25 HSF1 R**	**960×1024×25 HSF5 R**
			960×1024×25 HSF1 V	**960×1024×25 HSF5 V**
970	1 020	25	**970×1020×25 HSF1 R**	**970×1020×25 HSF5 R**
			970×1020×25 HSF1 V	**970×1020×25 HSF5 V**
	1 034	25	**970×1034×25 HSF1 R**	**970×1034×25 HSF5 R**
			970×1034×25 HSF1 V	**970×1034×25 HSF5 V**
1 000	1 064	25	**1000×1064×25 HSF1 R**	**1000×1064×25 HSF5 R**
			1000×1064×25 HSF1 V	**1000×1064×25 HSF5 V**
1 016	1 043,10	13,70	**1016×1043×14 HSF1 R**	**1016×1043×14 HSF5 R**
			1016×1043×14 HSF1 V	**1016×1043×14 HSF5 V**
1 110	1 174	25	**1110×1174×25 HSF1 R**	**1110×1174×25 HSF5 R**
			1110×1174×25 HSF1 V	**1110×1174×25 HSF5 V**

Radial shaft seals – HSF1 (split) and HSF5 (solid) – inch dimensions
d_1 **1.000 – 5.874** in.

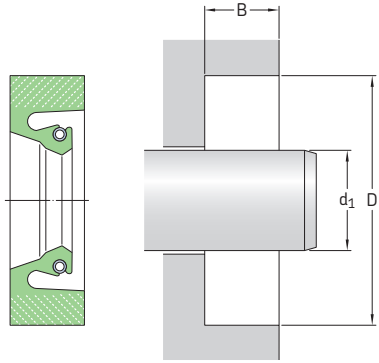

The table includes only a selection of available sizes. Contact your SKF sales representative for more information.

Please see **pages 74** to **76** for housing bore requirements.

Dimensions			**Designations**			
Shaft diameter d_1	Bore diameter D	Bore depth B	Split version (HSF1) Lip material R	V	Solid version (HSF5) Lip material R	V
in./*mm*			–			
1.000 *25,40*	1.874 *47,60*	0.375 *9,53*	**HSF1 5001 R**	**HSF1 5001 V**	**HSF5 5001 R**	**HSF5 5001 V**
2.750 *69,85*	3.375 *85,73*	0.313 *7,95*	**HSF1 5156 R**	**HSF1 5156 V**	**HSF5 5156 R**	**HSF5 5156 V**
3.248 *82,50*	4.500 *114,30*	0.500 *12,70*	**HSF1 5225 R**	**HSF1 5225 V**	**HSF5 5225 R**	**HSF5 5225 V**
3.500 *88,90*	4.500 *114,30*	0.500 *12,70*	**HSF1 5252 R**	**HSF1 5252 V**	**HSF5 5252 R**	**HSF5 5252 V**
3.874 *98,40*	4.878 *123,90*	0.500 *12,70*	**HSF1 5265 R**	**HSF1 5265 V**	**HSF5 5265 R**	**HSF5 5265 V**
4.000 *101,60*	5.000 *127,00*	0.500 *12,70*	**HSF1 5310 R**	**HSF1 5310 V**	**HSF5 5310 R**	**HSF5 5310 V**
4.425 *112,40*	5.500 *139,70*	0.562 *14,27*	**HSF1 5353 R**	**HSF1 5353 V**	**HSF5 5353 R**	**HSF5 5353 V**
4.437 *112,70*	5.465 *138,81*	0.583 *14,81*	**HSF1 5351 R**	**HSF1 5351 V**	**HSF5 5351 R**	**HSF5 5351 V**
4.874 *123,80*	5.874 *149,20*	0.500 *12,70*	**HSF1 5391 R**	**HSF1 5391 V**	**HSF5 5391 R**	**HSF5 5391 V**
5.205 *132,21*	6.504 *165,20*	0.591 *15,01*	**HSF1 5431 R**	**HSF1 5431 V**	**HSF5 5431 R**	**HSF5 5431 V**
5.622 *142,80*	6.622 *168,20*	0.625 *15,88*	**HSF1 5471 R**	**HSF1 5471 V**	**HSF5 5471 R**	**HSF5 5471 V**
5.750 *146,05*	7.000 *177,80*	0.625 *15,88*	**HSF1 5489 R**	**HSF1 5489 V**	**HSF5 5489 R**	**HSF5 5489 V**
5.874 *149,20*	7.000 *177,80*	0.492 *12,50*	**HSF1 5498 R**	**HSF1 5498 V**	**HSF5 5498 R**	**HSF5 5498 V**

Radial shaft seals – HSF1 (split) and HSF5 (solid) – inch dimensions
d_1 **6.000 – 17.000** in.

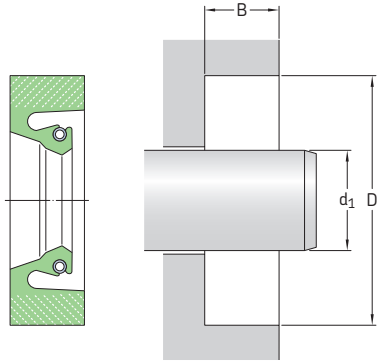

The table includes only a selection of available sizes. Contact your SKF sales representative for more information.

Please see **pages 74** to **76** for housing bore requirements.

Dimensions			**Designations**			
Shaft diameter d_1	Bore diameter D	Bore depth B	Split version (HSF1) Lip material R	V	Solid version (HSF5) Lip material R	V
in./*mm*			–			
6.000	7.126	0.630	**HSF1 5509 R**	**HSF1 5509 V**	**HSF5 5509 R**	**HSF5 5509 V**
152,40	*181,00*	*16,00*				
	7.500	0.625	**HSF1 5510 R**	**HSF1 5510 V**	**HSF5 5510 R**	**HSF5 5510 V**
	190,50	*15,88*				
6.500	8.000	0.750	**HSF1 5570 R**	**HSF1 5570 V**	**HSF5 5570 R**	**HSF5 5570 V**
165,10	*203,20*	*19,05*				
6.748	7.750	0.750	**HSF1 5585 R**	**HSF1 5585 V**	**HSF5 5585 R**	**HSF5 5585 V**
171,40	*196,85*	*19,05*				
7.000	8.000	0.437	**HSF1 5587 R**	**HSF1 5587 V**	**HSF5 5587 R**	**HSF5 5587 V**
177,80	*203,20*	*11,10*				
	8.250	0.750	**HSF1 5600 R**	**HSF1 5600 V**	**HSF5 5600 R**	**HSF5 5600 V**
	209,55	*19,05*				
7.250	8.500	0.625	**HSF1 5624 R**	**HSF1 5624 V**	**HSF5 5624 R**	**HSF5 5624 V**
184,15	*215,90*	*15,88*				
7.500	8.500	0.625	**HSF1 5662 R**	**HSF1 5662 V**	**HSF5 5662 R**	**HSF5 5662 V**
190,50	*215,90*	*15,88*				
7.677	8.677	0.500	**HSF1 5667 R**	**HSF1 5667 V**	**HSF5 5667 R**	**HSF5 5667 V**
195,00	*220,40*	*12,70*				
8.598	9.843	0.591	**HSF1 5764 R**	**HSF1 5764 V**	**HSF5 5764 R**	**HSF5 5764 V**
218,39	*250,01*	*15,01*				
8.750	10.000	0.625	**HSF1 5790 R**	**HSF1 5790 V**	**HSF5 5790 R**	**HSF5 5790 V**
222,25	*254,00*	*15,88*				
9.625	11.635	1.000	**HSF1 5878 R**	**HSF1 5878 V**	**HSF5 5878 R**	**HSF5 5878 V**
244,48	*295,53*	*25,40*				
9.843	10.843	0.500	**HSF1 5885 R**	**HSF1 5885 V**	**HSF5 5885 R**	**HSF5 5885 V**
250,01	*275,41*	*12,70*				
10.000	11.250	0.625	**HSF1 5910 R**	**HSF1 5910 V**	**HSF5 5910 R**	**HSF5 5910 V**
254,00	*285,75*	*15,88*				
10.250	12.250	0.750	**HSF1 5950 R**	**HSF1 5950 V**	**HSF5 5950 R**	**HSF5 5950 V**
260,35	*311,15*	*19,05*				

Dimensions			Designations			
Shaft diameter d_1	Bore diameter D	Bore depth B	Split version (HSF1) Lip material R	V	Solid version (HSF5) Lip material R	V
in./*mm*			–			
11.000 *279,40*	12.181 *309,40*	0.591 *15,01*	**HSF1 6000 R**	**HSF1 6000 V**	**HSF5 6000 R**	**HSF5 6000 V**
11.250 *285,75*	12.500 *317,50*	0.625 *15,88*	**HSF1 6040 R**	**HSF1 6040 V**	**HSF5 6040 R**	**HSF5 6040 V**
11.260 *286,00*	13.250 *336,55*	0.591 *15,01*	**HSF1 6049 R**	**HSF1 6049 V**	**HSF5 6049 R**	**HSF5 6049 V**
11.417 *289,99*	12.417 *315,39*	0.500 *12,70*	**HSF1 6055 R**	**HSF1 6055 V**	**HSF5 6055 R**	**HSF5 6055 V**
12.250 *311,15*	14.250 *361,95*	0.813 *20,65*	**HSF1 6150 R**	**HSF1 6150 V**	**HSF5 6150 R**	**HSF5 6150 V**
12.484 *317,09*	14.000 *355,60*	0.630 *16,00*	**HSF1 6172 R**	**HSF1 6172 V**	**HSF5 6172 R**	**HSF5 6172 V**
12.500 *317,50*	14.000 *355,60*	0.750 *19,05*	**HSF1 6173 R**	**HSF1 6173 V**	**HSF5 6173 R**	**HSF5 6173 V**
12.504 *317,60*	14.000 *355,60*	0.687 *17,45*	**HSF1 6175 R**	**HSF1 6175 V**	**HSF5 6175 R**	**HSF5 6175 V**
12.746 *323,75*	14.248 *361,90*	0.687 *17,45*	**HSF1 6192 R**	**HSF1 6192 V**	**HSF5 6192 R**	**HSF5 6192 V**
	14.750 *374,65*	1.000 *25,40*	**HSF1 6195 R**	**HSF1 6195 V**	**HSF5 6195 R**	**HSF5 6195 V**
13.000 *330,20*	14.500 *368,30*	0.687 *17,45*	**HSF1 6230 R**	**HSF1 6230 V**	**HSF5 6230 R**	**HSF5 6230 V**
	14.500 *368,30*	0.687 *17,45*	**HSF1 6230 R**	**HSF1 6230 V**	**HSF5 6230 R**	**HSF5 6230 V**
13.500 *342,90*	15.000 *381,00*	0.750 *19,05*	**HSF1 6271 R**	**HSF1 6271 V**	**HSF5 6271 R**	**HSF5 6271 V**
14.370 *365,00*	16.118 *409,40*	0.750 *19,05*	**HSF1 6350 R**	**HSF1 6350 V**	**HSF5 6350 R**	**HSF5 6350 V**
14.500 *368,30*	16.250 *412,75*	0.625 *15,88*	**HSF1 6370 R**	**HSF1 6370 V**	**HSF5 6370 R**	**HSF5 6370 V**
14.961 *380,01*	16.961 *430,81*	0.813 *20,65*	**HSF1 6425 R**	**HSF1 6425 V**	**HSF5 6425 R**	**HSF5 6425 V**
15.250 *387,35*	17.250 *438,15*	0.875 *22,23*	**HSF1 6460 R**	**HSF1 6460 V**	**HSF5 6460 R**	**HSF5 6460 V**
15.992 *406,20*	17.500 *444,50*	0.687 *17,45*	**HSF1 6550 R**	**HSF1 6550 V**	**HSF5 6550 R**	**HSF5 6550 V**
16.000 *406,40*	18.000 *457,20*	0.750 *19,05*	**HSF1 6560 R**	**HSF1 6560 V**	**HSF5 6560 R**	**HSF5 6560 V**
	18.000 *457,20*	0.813 *20,65*	**HSF1 6565 R**	**HSF1 6565 V**	**HSF5 6565 R**	**HSF5 6565 V**
	18.000 *457,20*	0.906 *23,01*	**HSF1 6575 R**	**HSF1 6575 V**	**HSF5 6575 R**	**HSF5 6575 V**
16.226 *412,14*	17.750 *450,85*	0.687 *17,45*	**HSF1 6590 R**	**HSF1 6590 V**	**HSF5 6590 R**	**HSF5 6590 V**
16.500 *419,10*	17.750 *450,85*	0.750 *19,05*	**HSF1 6600 R**	**HSF1 6600 V**	**HSF5 6600 R**	**HSF5 6600 V**
17.000 *431,80*	19.000 *482,60*	0.813 *20,65*	**HSF1 6645 R**	**HSF1 6645 V**	**HSF5 6645 R**	**HSF5 6645 V**

Radial shaft seals – HSF1 (split) and HSF5 (solid) – inch dimensions
d_1 **17.248 – 48.000** in.

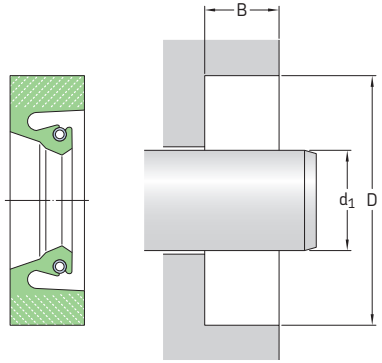

The table includes only a selection of available sizes. Contact your SKF sales representative for more information.

Please see **pages 74** to **76** for housing bore requirements.

Dimensions			**Designations**			
Shaft diameter d_1	Bore diameter D	Bore depth B	Split version (HSF1) Lip material R	V	Solid version (HSF5) Lip material R	V
in./*mm*			–			
17.248 *438,10*	18.748 *476,20*	0.750 *19,05*	**HSF1 6656 R**	**HSF1 6656 V**	**HSF5 6656 R**	**HSF5 6656 V**
18.169 *461,49*	21.260 *540,00*	1.220 *30,99*	**HSF1 6734 R**	**HSF1 6734 V**	**HSF5 6734 R**	**HSF5 6734 V**
20.500 *520,70*	22.500 *571,50*	1.000 *25,40*	**HSF1 6890 R**	**HSF1 6890 V**	**HSF5 6890 R**	**HSF5 6890 V**
21.000 *533,40*	23.000 *584,20*	0.875 *22,23*	**HSF1 6930 R**	**HSF1 6930 V**	**HSF5 6930 R**	**HSF5 6930 V**
22.000 *558,80*	24.000 *609,60*	0.875 *22,23*	**HSF1 7000 R**	**HSF1 7000 V**	**HSF5 7000 R**	**HSF5 7000 V**
23.248 *590,50*	25.250 *641,35*	0.813 *20,65*	**HSF1 7100 R**	**HSF1 7100 V**	**HSF5 7100 R**	**HSF5 7100 V**
23.501 *596,93*	22.001 *558,83*	0.750 *19,05*	**HSF1 6990 R**	**HSF1 6990 V**	**HSF5 6990 R**	**HSF5 6990 V**
30.000 *762,00*	32.500 *825,50*	1.000 *25,40*	**HSF1 7520 R**	**HSF1 7520 V**	**HSF5 7520 R**	**HSF5 7520 V**
30.461 *773,71*	32.500 *825,50*	0.906 *23,01*	**HSF1 7525 R**	**HSF1 7525 V**	**HSF5 7525 R**	**HSF5 7525 V**
31.000 *787,40*	33.000 *838,20*	0.906 *23,01*	**HSF1 7570 R**	**HSF1 7570 V**	**HSF5 7570 R**	**HSF5 7570 V**
31.250 *793,75*	33.250 *844,55*	0.750 *19,05*	**HSF1 7580 R**	**HSF1 7580 V**	**HSF5 7580 R**	**HSF5 7580 V**
32.500 *825,50*	34.500 *876,30*	0.875 *22,23*	**HSF1 7700 R**	**HSF1 7700 V**	**HSF5 7700 R**	**HSF5 7700 V**
	34.500 *876,30*	1.000 *25,40*	**HSF1 7710 R**	**HSF1 7710 V**	**HSF5 7710 R**	**HSF5 7710 V**
33.000 *838,20*	35.000 *889,00*	0.906 *23,01*	**HSF1 7730 R**	**HSF1 7730 V**	**HSF5 7730 R**	**HSF5 7730 V**

Dimensions			Designations			
Shaft diameter d_1	Bore diameter D	Bore depth B	Split version (HSF1) Lip material R	V	Solid version (HSF5) Lip material R	V
in./*mm*			–			
34.375 *873,13*	36.875 *936,63*	1.250 *31,75*	**HSF1 7810 R**	**HSF1 7810 V**	**HSF5 7810 R**	**HSF5 7810 V**
36.500 *927,10*	39.000 *990,60*	1.250 *31,75*	**HSF1 7895 R**	**HSF1 7895 V**	**HSF5 7895 R**	**HSF5 7895 V**
36.748 *933,40*	38.749 *984,22*	0.875 *22,23*	**HSF1 7900 R**	**HSF1 7900 V**	**HSF5 7900 R**	**HSF5 7900 V**
38.000 *965,20*	40.000 *1016,00*	0.875 *22,23*	**HSF1 7990 R**	**HSF1 7990 V**	**HSF5 7990 R**	**HSF5 7990 V**
39.118 *993,60*	40.000 *1016,00*	0.500 *12,70*	**HSF1 8170 R**	**HSF1 8170 V**	**HSF5 8170 R**	**HSF5 8170 V**
48.000 *1219,20*	49.000 *1244,60*	1.260 *32,00*	**HSF1 8400 R**	**HSF1 8400 V**	**HSF5 8400 R**	**HSF5 8400 V**

Radial shaft seals – HSF2 (split) and HSF6 (solid) – metric dimensions
d_1 **127 – 800** mm

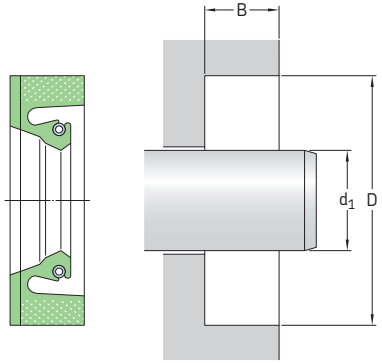

The table includes only a selection of available sizes. Contact your SKF sales representative for more information.

Please see **pages 74** to **76** for housing bore requirements.

Dimensions Shaft diameter d_1	Bore diameter D	Bore depth B	**Designations** Split version (HSF2) Lip material R, V	Solid version (HSF6) Lip material R, V
mm			–	
127	158,80	12,30	**127×159×12 HSF2 R** **127×159×12 HSF2 V**	**127×159×12 HSF6 R** **127×159×12 HSF6 V**
275	319,50	19	**275×320×19 HSF2 R** **275×320×19 HSF2 V**	**275×320×19 HSF6 R** **275×320×19 HSF6 V**
320	364	18	**320×364×18 HSF2 R** **320×364×18 HSF2 V**	**320×364×18 HSF6 R** **320×364×18 HSF6 V**
800	864	21,60	**800×864×22 HSF2 R** **800×864×22 HSF2 V**	**800×864×22 HSF6 R** **800×864×22 HSF6 V**

Radial shaft seals – HSF2 (split) and HSF6 (solid) – inch dimensions
d_1 **21.000** in.

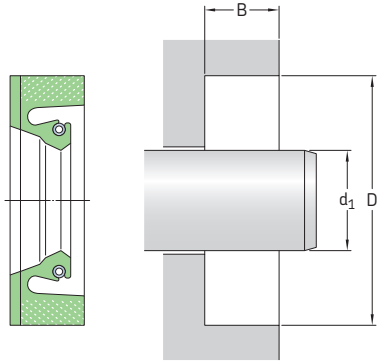

The table includes only a selection of available sizes. Contact your SKF sales representative for more information.

Please see **pages 74** to **76** for housing bore requirements.

Dimensions			**Designations**			
			Split version (HSF2)		Solid version (HSF6)	
Shaft diameter d_1	Bore diameter D	Bore depth B	Lip material R	V	Lip material R	V
in./*mm*			–			
21.000 *533,40*	23.000 *584,20*	0.875 *22,23*	**HSF2 6930 R**	**HSF2 6930 V**	**HSF6 6930 R**	**HSF6 6930 V**

Radial shaft seals – HSF3 (split) and HSF7 (solid) – metric dimensions
d_1 **80 – 380** mm

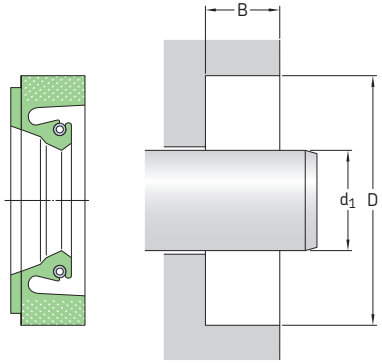

The table includes only a selection of available sizes. Contact your SKF sales representative for more information.

Please see **pages 74** to **76** for housing bore requirements.

Dimensions Shaft diameter d_1	Bore diameter D	Bore depth B	**Designations** Split version (HSF3) Lip material R, V	Solid version (HSF7) Lip material R, V
mm			–	
80	95	10	**80×95×10 HSF3 R** **80×95×10 HSF3 V**	**80×95×10 HSF7 R** **80×95×10 HSF7 V**
100	130	12,50	**100×130×13 HSF3 R** **100×130×13 HSF3 V**	**100×130×13 HSF7 R** **100×130×13 HSF7 V**
140	180	16	**140×180×16 HSF3 R** **140×180×16 HSF3 V**	**140×180×16 HSF7 R** **140×180×16 HSF7 V**
150	190	16	**150×190×16 HSF3 R** **150×190×16 HSF3 V**	**150×190×16 HSF7 R** **150×190×16 HSF7 V**
160	200	16	**160×200×16 HSF3 R** **160×200×16 HSF3 V**	**160×200×16 HSF7 R** **160×200×16 HSF7 V**
165	195	15	**165×195×15 HSF3 R** **165×195×15 HSF3 V**	**165×195×15 HSF7 R** **165×195×15 HSF7 V**
220	250	15	**220×250×15 HSF3 R** **220×250×15 HSF3 V**	**220×250×15 HSF7 R** **220×250×15 HSF7 V**
	260	18	**220×260×18 HSF3 R** **220×260×18 HSF3 V**	**220×260×18 HSF7 R** **220×260×18 HSF7 V**
230	270	16	**230×270×16 HSF3 R** **230×270×16 HSF3 V**	**230×270×16 HSF7 R** **230×270×16 HSF7 V**
235	265	15,30	**235×265×15 HSF3 R** **235×265×15 HSF3 V**	**235×265×15 HSF7 R** **235×265×15 HSF7 V**
240	280	18	**240×280×18 HSF3 R** **240×280×18 HSF3 V**	**240×280×18 HSF7 R** **240×280×18 HSF7 V**
	290	25	**240×290×25 HSF3 R** **240×290×25 HSF3 V**	**240×290×25 HSF7 R** **240×290×25 HSF7 V**
245	285	16	**245×285×16 HSF3 R** **245×285×16 HSF3 V**	**245×285×16 HSF7 R** **245×285×16 HSF7 V**
250	280	16	**250×280×16 HSF3 R** **250×280×16 HSF3 V**	**250×280×16 HSF7 R** **250×280×16 HSF7 V**
	290	16,50	**250×290×17 HSF3 R** **250×290×17 HSF3 V**	**250×290×17 HSF7 R** **250×290×17 HSF7 V**

Dimensions			Designations	
Shaft diameter d_1	Bore diameter D	Bore depth B	Split version (HSF3) Lip material R, V	Solid version (HSF7) Lip material R, V
mm			–	
270	310	18	**270×310×18 HSF3 R**	**270×310×18 HSF7 R**
			270×310×18 HSF3 V	**270×310×18 HSF7 V**
280	320	18	**280×320×18 HSF3 R**	**280×320×18 HSF7 R**
			280×320×18 HSF3 V	**280×320×18 HSF7 V**
285	325	18	**285×325×18 HSF3 R**	**285×325×18 HSF7 R**
			285×325×18 HSF3 V	**285×325×18 HSF7 V**
290	334	20,30	**290×334×20 HSF3 R**	**290×334×20 HSF7 R**
			290×334×20 HSF3 V	**290×334×20 HSF7 V**
300	340	16,50	**300×340×17 HSF3 R**	**300×340×17 HSF7 R**
			300×340×17 HSF3 V	**300×340×17 HSF7 V**
	340	18	**300×340×18 HSF3 R**	**300×340×18 HSF7 R**
			300×340×18 HSF3 V	**300×340×18 HSF7 V**
	344	20	**300×344×20 HSF3 R**	**300×344×20 HSF7 R**
			300×344×20 HSF3 V	**300×344×20 HSF7 V**
310	353	20	**310×353×20 HSF3 R**	**310×353×20 HSF7 R**
			310×353×20 HSF3 V	**310×353×20 HSF7 V**
	354	20	**310×354×20 HSF3 R**	**310×354×20 HSF7 R**
			310×354×20 HSF3 V	**310×354×20 HSF7 V**
315	360	20	**315×360×20 HSF3 R**	**315×360×20 HSF7 R**
			315×360×20 HSF3 V	**315×360×20 HSF7 V**
320	350	15	**320×350×15 HSF3 R**	**320×350×15 HSF7 R**
			320×350×15 HSF3 V	**320×350×15 HSF7 V**
	360	17,70	**320×360×18 HSF3 R**	**320×360×18 HSF7 R**
			320×360×18 HSF3 V	**320×360×18 HSF7 V**
325	365	16	**325×365×16 HSF3 R**	**325×365×16 HSF7 R**
			325×365×16 HSF3 V	**325×365×16 HSF7 V**
330	370	20	**330×370×20 HSF3 R**	**330×370×20 HSF7 R**
			330×370×20 HSF3 V	**330×370×20 HSF7 V**
	374	20	**330×374×20 HSF3 R**	**330×374×20 HSF7 R**
			330×374×20 HSF3 V	**330×374×20 HSF7 V**
340	372	16	**340×372×16 HSF3 R**	**340×372×16 HSF7 R**
			340×372×16 HSF3 V	**340×372×16 HSF7 V**
345	389	20	**345×389×20 HSF3 R**	**345×389×20 HSF7 R**
			345×389×20 HSF3 V	**345×389×20 HSF7 V**
350	390	18	**350×390×18 HSF3 R**	**350×390×18 HSF7 R**
			350×390×18 HSF3 V	**350×390×18 HSF7 V**
	394	20	**350×394×20 HSF3 R**	**350×394×20 HSF7 R**
			350×394×20 HSF3 V	**350×394×20 HSF7 V**
	394	22	**350×394×22 HSF3 R**	**350×394×22 HSF7 R**
			350×394×22 HSF3 V	**350×394×22 HSF7 V**
360	404	20	**360×404×20 HSF3 R**	**360×404×20 HSF7 R**
			360×404×20 HSF3 V	**360×404×20 HSF7 V**
365	409,40	19,05	**365×409×19 HSF3 R**	**365×409×19 HSF7 R**
			365×409×19 HSF3 V	**365×409×19 HSF7 V**
366	410	20	**366×410×20 HSF3 R**	**366×410×20 HSF7 R**
			366×410×20 HSF3 V	**366×410×20 HSF7 V**
370	410	18	**370×410×18 HSF3 R**	**370×410×18 HSF7 R**
			370×410×18 HSF3 V	**370×410×18 HSF7 V**
380	419	24	**380×419×24 HSF3 R**	**380×419×24 HSF7 R**
			380×419×24 HSF3 V	**380×419×24 HSF7 V**
	424	20	**380×424×20 HSF3 R**	**380×424×20 HSF7 R**
			380×424×20 HSF3 V	**380×424×20 HSF7 V**

Radial shaft seals – HSF3 (split) and HSF7 (solid) – metric dimensions
d_1 **385 – 750** mm

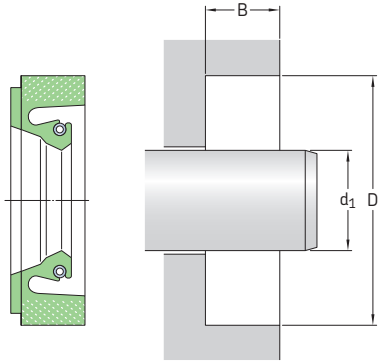

The table includes only a selection of available sizes. Contact your SKF sales representative for more information.

Please see **pages 74** to **76** for housing bore requirements.

Dimensions Shaft diameter d_1	Bore diameter D	Bore depth B	**Designations** Split version (HSF3) Lip material R, V	Solid version (HSF7) Lip material R, V
mm			–	
385	425	18,30	**385×425×18 HSF3 R** **385×425×18 HSF3 V**	**385×425×18 HSF7 R** **385×425×18 HSF7 V**
387	431	22,50	**387×431×23 HSF3 R** **387×431×23 HSF3 V**	**387×431×23 HSF7 R** **387×431×23 HSF7 V**
390	430	18	**390×430×18 HSF3 R** **390×430×18 HSF3 V**	**390×430×18 HSF7 R** **390×430×18 HSF7 V**
400	440	18	**400×440×18 HSF3 R** **400×440×18 HSF3 V**	**400×440×18 HSF7 R** **400×440×18 HSF7 V**
	440	22	**400×440×22 HSF3 R** **400×440×22 HSF3 V**	**400×440×22 HSF7 R** **400×440×22 HSF7 V**
	444	20	**400×444×20 HSF3 R** **400×444×20 HSF3 V**	**400×444×20 HSF7 R** **400×444×20 HSF7 V**
	450	22	**400×450×22 HSF3 R** **400×450×22 HSF3 V**	**400×450×22 HSF7 R** **400×450×22 HSF7 V**
420	470	22	**420×470×22 HSF3 R** **420×470×22 HSF3 V**	**420×470×22 HSF7 R** **420×470×22 HSF7 V**
430	480	22	**430×480×22 HSF3 R** **430×480×22 HSF3 V**	**430×480×22 HSF7 R** **430×480×22 HSF7 V**
440	490	22	**440×490×22 HSF3 R** **440×490×22 HSF3 V**	**440×490×22 HSF7 R** **440×490×22 HSF7 V**
450	494	20	**450×494×20 HSF3 R** **450×494×20 HSF3 V**	**450×494×20 HSF7 R** **450×494×20 HSF7 V**
460	510	22	**460×510×22 HSF3 R** **460×510×22 HSF3 V**	**460×510×22 HSF7 R** **460×510×22 HSF7 V**
480	530	22	**480×530×22 HSF3 R** **480×530×22 HSF3 V**	**480×530×22 HSF7 R** **480×530×22 HSF7 V**
500	544	20	**500×544×20 HSF3 R** **500×544×20 HSF3 V**	**500×544×20 HSF7 R** **500×544×20 HSF7 V**
515	555	20	**515×555×20 HSF3 R** **515×555×20 HSF3 V**	**515×555×20 HSF7 R** **515×555×20 HSF7 V**

Dimensions			Designations	
Shaft diameter d_1	Bore diameter D	Bore depth B	Split version (HSF3) Lip material R, V	Solid version (HSF7) Lip material R, V
mm			–	
520	564	20	**520×564×20 HSF3 R** **520×564×20 HSF3 V**	**520×564×20 HSF7 R** **520×564×20 HSF7 V**
	570	22	**520×570×22 HSF3 R** **520×570×22 HSF3 V**	**520×570×22 HSF7 R** **520×570×22 HSF7 V**
530	580	22	**530×580×22 HSF3 R** **530×580×22 HSF3 V**	**530×580×22 HSF7 R** **530×580×22 HSF7 V**
540	590	22	**540×590×22 HSF3 R** **540×590×22 HSF3 V**	**540×590×22 HSF7 R** **540×590×22 HSF7 V**
	590	25	**540×590×25 HSF3 R** **540×590×25 HSF3 V**	**540×590×25 HSF7 R** **540×590×25 HSF7 V**
545	596,90	19,05	**545×597×19 HSF3 R** **545×597×19 HSF3 V**	**545×597×19 HSF7 R** **545×597×19 HSF7 V**
550	600	22	**550×600×22 HSF3 R** **550×600×22 HSF3 V**	**550×600×22 HSF7 R** **550×600×22 HSF7 V**
560	603	20	**560×603×20 HSF3 R** **560×603×20 HSF3 V**	**560×603×20 HSF7 R** **560×603×20 HSF7 V**
	604	20	**560×604×20 HSF3 R** **560×604×20 HSF3 V**	**560×604×20 HSF7 R** **560×604×20 HSF7 V**
580	630	22	**580×630×22 HSF3 R** **580×630×22 HSF3 V**	**580×630×22 HSF7 R** **580×630×22 HSF7 V**
590	640	22	**590×640×22 HSF3 R** **590×640×22 HSF3 V**	**590×640×22 HSF7 R** **590×640×22 HSF7 V**
600	640	18	**600×640×18 HSF3 R** **600×640×18 HSF3 V**	**600×640×18 HSF7 R** **600×640×18 HSF7 V**
614	658	20	**614×658×20 HSF3 R** **614×658×20 HSF3 V**	**614×658×20 HSF7 R** **614×658×20 HSF7 V**
620	670	22	**620×670×22 HSF3 R** **620×670×22 HSF3 V**	**620×670×22 HSF7 R** **620×670×22 HSF7 V**
640	680	20	**640×680×20 HSF3 R** **640×680×20 HSF3 V**	**640×680×20 HSF7 R** **640×680×20 HSF7 V**
650	700	22	**650×700×22 HSF3 R** **650×700×22 HSF3 V**	**650×700×22 HSF7 R** **650×700×22 HSF7 V**
660	700	18	**660×700×18 HSF3 R** **660×700×18 HSF3 V**	**660×700×18 HSF7 R** **660×700×18 HSF7 V**
665	715	22	**665×715×22 HSF3 R** **665×715×22 HSF3 V**	**665×715×22 HSF7 R** **665×715×22 HSF7 V**
670	714	22	**670×714×22 HSF3 R** **670×714×22 HSF3 V**	**670×714×22 HSF7 R** **670×714×22 HSF7 V**
700	764	25	**700×764×25 HSF3 R** **700×764×25 HSF3 V**	**700×764×25 HSF7 R** **700×764×25 HSF7 V**
710	774	25	**710×774×25 HSF3 R** **710×774×25 HSF3 V**	**710×774×25 HSF7 R** **710×774×25 HSF7 V**
724	775	22	**724×775×22 HSF3 R** **724×775×22 HSF3 V**	**724×775×22 HSF7 R** **724×775×22 HSF7 V**
740	780	16,50	**740×780×17 HSF3 R** **740×780×17 HSF3 V**	**740×780×17 HSF7 R** **740×780×17 HSF7 V**
750	814	28	**750×814×28 HSF3 R** **750×814×28 HSF3 V**	**750×814×28 HSF7 R** **750×814×28 HSF7 V**

Radial shaft seals – HSF3 (split) and HSF7 (solid) – metric dimensions
d_1 **775 – 985** mm

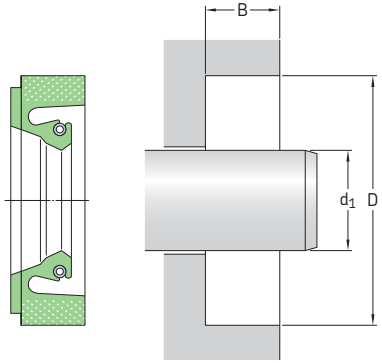

The table includes only a selection of available sizes. Contact your SKF sales representative for more information.

Please see **pages 74** to **76** for housing bore requirements.

Dimensions Shaft diameter d_1	Bore diameter D	Bore depth B	**Designations** Split version (HSF3) Lip material R, V	Solid version (HSF7) Lip material R, V
mm			–	
775	839	25	**775×839×25 HSF3 R** **775×839×25 HSF3 V**	**775×839×25 HSF7 R** **775×839×25 HSF7 V**
790	834	25	**790×834×25 HSF3 R** **790×834×25 HSF3 V**	**790×834×25 HSF7 R** **790×834×25 HSF7 V**
	854	25	**790×854×25 HSF3 R** **790×854×25 HSF3 V**	**790×854×25 HSF7 R** **790×854×25 HSF7 V**
800	864	25	**800×864×25 HSF3 R** **800×864×25 HSF3 V**	**800×864×25 HSF7 R** **800×864×25 HSF7 V**
840	880	18	**840×880×18 HSF3 R** **840×880×18 HSF3 V**	**840×880×18 HSF7 R** **840×880×18 HSF7 V**
880	944	25,40	**880×944×25.4 HSF3 R** **880×944×25.4 HSF3 V**	**880×944×25.4 HSF7 R** **880×944×25.4 HSF7 V**
890	930	18	**890×930×18 HSF3 R** **890×930×18 HSF3 V**	**890×930×18 HSF7 R** **890×930×18 HSF7 V**
910	974	25	**910×974×25 HSF3 R** **910×974×25 HSF3 V**	**910×974×25 HSF7 R** **910×974×25 HSF7 V**
970	1 034	25	**970×1034×25 HSF3 R** **970×1034×25 HSF3 V**	**970×1034×25 HSF7 R** **970×1034×25 HSF7 V**
985	1 045	25	**985×1045×25 HSF3 R** **985×1045×25 HSF3 V**	**985×1045×25 HSF7 R** **985×1045×25 HSF7 V**

Radial shaft seals – HSF3 (split) and HSF7 (solid) – inch dimensions
d_1 **8.500 – 45.500** in.

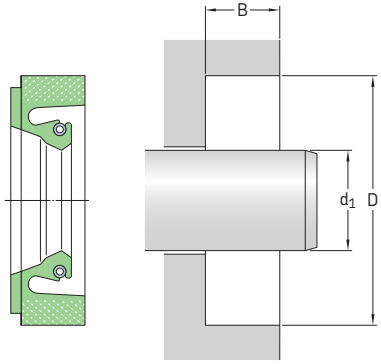

The table includes only a selection of available sizes. Contact your SKF sales representative for more information.

Please see **pages 74** to **76** for housing bore requirements.

Dimensions			**Designations**			
Shaft diameter d_1	Bore diameter D	Bore depth B	Split version (HSF3) Lip material R	V	Solid version (HSF7) Lip material R	V
in./*mm*			–			
8.500 *215,90*	9.750 *247,65*	0.813 *20,65*	**HSF3 5766 R**	**HSF3 5766 V**	**HSF7 5766 R**	**HSF7 5766 V**
10.000 *254,00*	11.500 *292,10*	0.630 *16,00*	**HSF3 5920 R**	**HSF3 5920 V**	**HSF7 5920 R**	**HSF7 5920 V**
11.500 *292,10*	13.780 *350,01*	0.630 *16,00*	**HSF3 6075 R**	**HSF3 6075 V**	**HSF7 6075 R**	**HSF7 6075 V**
12.250 *311,15*	14.250 *361,95*	0.813 *20,65*	**HSF3 6150 R**	**HSF3 6150 V**	**HSF7 6150 R**	**HSF7 6150 V**
14.500 *368,30*	16.500 *419,10*	0.813 *20,65*	**HSF3 6370 R**	**HSF3 6370 V**	**HSF7 6370 R**	**HSF7 6370 V**
	16.500 *419,10*	1.152 *29,26*	**HSF3 6375 R**	**HSF3 6375 V**	**HSF7 6375 R**	**HSF7 6375 V**
14.750 *374,65*	16.500 *419,10*	0.875 *22,23*	**HSF3 6395 R**	**HSF3 6395 V**	**HSF7 6395 R**	**HSF7 6395 V**
15.250 *387,35*	17.250 *438,15*	1.000 *25,40*	**HSF3 6465 R**	**HSF3 6465 V**	**HSF7 6465 R**	**HSF7 6465 V**
16.500 *419,10*	18.000 *457,20*	0.750 *19,05*	**HSF3 6611 R**	**HSF3 6611 V**	**HSF7 6611 R**	**HSF7 6611 V**
35.500 *901,70*	37.500 *952,50*	0.875 *22,23*	**HSF3 7860 R**	**HSF3 7860 V**	**HSF7 7860 R**	**HSF7 7860 V**
36.000 *914,40*	38.500 *977,90*	0.875 *22,23*	**HSF3 7890 R**	**HSF3 7890 V**	**HSF7 7890 R**	**HSF7 7890 V**
45.500 *1 155,70*	47.000 *1 193,80*	0.813 *20,65*	**HSF3 9000 R**	**HSF3 9000 V**	**HSF7 9000 R**	**HSF7 9000 V**

Radial shaft seals – HSF4 (split) and HSF8 (solid) – metric dimensions
d_1 **75 – 660** mm

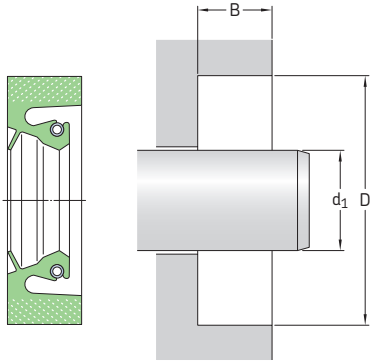

The table includes only a selection of available sizes. Contact your SKF sales representative for more information.

Please see **pages 74** to **76** for housing bore requirements.

Dimensions Shaft diameter d_1	Bore diameter D	Bore depth B	**Designations** Split version (HSF4) Lip material R, V	Solid version (HSF8) Lip material R, V
mm			–	
75	107	12,50	**75×107×13 HSF4 R** **75×107×13 HSF4 V**	**75×107×13 HSF8 R** **75×107×13 HSF8 V**
105	145	16	**105×145×16 HSF4 R** **105×145×16 HSF4 V**	**105×145×16 HSF8 R** **105×145×16 HSF8 V**
215	250	16	**215×250×16 HSF4 R** **215×250×16 HSF4 V**	**215×250×16 HSF8 R** **215×250×16 HSF8 V**
300	340	16	**300×340×16 HSF4 R** **300×340×16 HSF4 V**	**300×340×16 HSF8 R** **300×340×16 HSF8 V**
330	374	20	**330×374×20 HSF4 R** **330×374×20 HSF4 V**	**330×374×20 HSF8 R** **330×374×20 HSF8 V**
370	410	15	**370×410×15 HSF4 R** **370×410×15 HSF4 V**	**370×410×15 HSF8 R** **370×410×15 HSF8 V**
	420	20	**380×420×20 HSF4 R** **380×420×20 HSF4 V**	**380×420×20 HSF8 R** **380×420×20 HSF8 V**
380	420	22	**380×420×22 HSF4 R** **380×420×22 HSF4 V**	**380×420×22 HSF8 R** **380×420×22 HSF8 V**
	490	20	**440×490×20 HSF4 R** **440×490×20 HSF4 V**	**440×490×20 HSF8 R** **440×490×20 HSF8 V**
440	490	22	**440×490×22 HSF4 R** **440×490×22 HSF4 V**	**440×490×22 HSF8 R** **440×490×22 HSF8 V**
450	500	22	**450×500×22 HSF4 R** **450×500×22 HSF4 V**	**450×500×22 HSF8 R** **450×500×22 HSF8 V**
460	500	16	**460×500×16 HSF4 R** **460×500×16 HSF4 V**	**460×500×16 HSF8 R** **460×500×16 HSF8 V**
500	540	22	**500×540×22 HSF4 R** **500×540×22 HSF4 V**	**500×540×22 HSF8 R** **500×540×22 HSF8 V**
660	704	20	**660×704×20 HSF4 R** **660×704×20 HSF4 V**	**660×704×20 HSF8 R** **660×704×20 HSF8 V**

Radial shaft seals – HSF4 (split) and HSF8 (solid) – inch dimensions
d_1 **38.000** in.

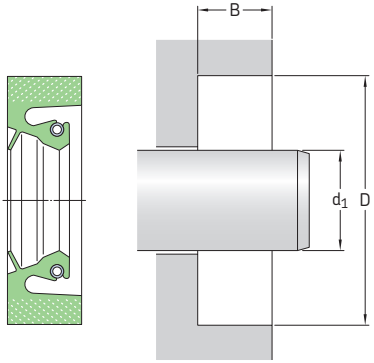

The table includes only a selection of available sizes. Contact your SKF sales representative for more information.

Please see **pages 74** to **76** for housing bore requirements.

Dimensions			**Designations**			
Shaft diameter d_1	Bore diameter D	Bore depth B	Split version (HSF4) Lip material R	V	Solid version (HSF8) Lip material R	V
in./*mm*			–			
38.000 *965,20*	40.000 *1 016,00*	0.875 *22,23*	**HSF4 7990 R**	**HSF4 7990 V**	**HSF8 7990 R**	**HSF8 7990 V**

Radial shaft seals – HSF9 – metric dimensions
d_1 **200 – 860** mm

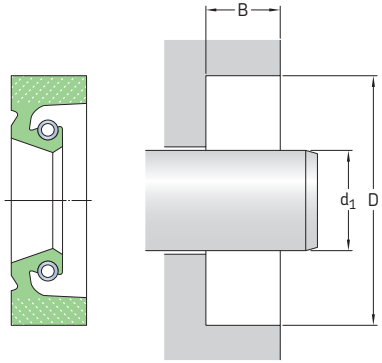

The table includes only a selection of available sizes. Contact your SKF sales representative for more information.

Please see **pages 74** to **76** for housing bore requirements.

Dimensions			**Designations**	
Shaft diameter d_1	Bore diameter D	Bore depth B	Lip material R	V
mm			–	
200	240	16,50	**200×240×17 HSF9 R**	**200×240×17 HSF9 V**
335	379	20	**335×379×20 HSF9 R**	**335×379×20 HSF9 V**
346	390	18	**346×390×18 HSF9 R**	**346×390×18 HSF9 V**
360	404	17,45	**360×404×17 HSF9 R**	**360×404×17 HSF9 V**
480	530	22	**480×530×22 HSF9 R**	**480×530×22 HSF9 V**
500	540	20	**500×540×20 HSF9 R**	**500×540×20 HSF9 V**
515	555	20	**515×555×20 HSF9 R**	**515×555×20 HSF9 V**
600	644	20	**600×644×20 HSF9 R**	**600×644×20 HSF9 V**
700	750	25	**700×750×25 HSF9 R**	**700×750×25 HSF9 V**
751	814	25,40	**751×814×25 HSF9 R**	**751×814×25 HSF9 V**
840	904	25	**840×904×25 HSF9 R**	**840×904×25 HSF9 V**
860	924	25	**860×924×25 HSF9 R**	**860×924×25 HSF9 V**

Radial shaft seals – HSF9 – inch dimensions
d_1 **17.875 – 25.996** in.

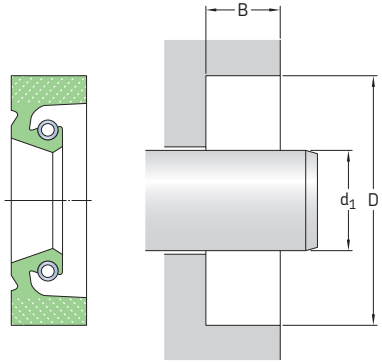

The table includes only a selection of available sizes. Contact your SKF sales representative for more information.

Please see **pages 74** to **76** for housing bore requirements.

Dimensions			**Designations**	
Shaft diameter d_1	Bore diameter D	Bore depth B	Lip material R	V
in./*mm*			–	
17.875 *454,03*	19.850 *504,19*	0.813 *20,65*	**HSF9 6715 R**	**HSF9 6715 V**
25.996 *660,30*	28.000 *711,20*	1.000 *25,40*	**HSF9 7233 R**	**HSF9 7233 V**

Radial shaft seals – HS4 and HS5 – metric dimensions
d_1 **230 – 1 055** mm

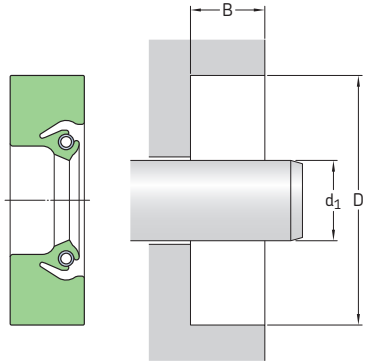

The table includes only a selection of sizes. For the full size range, please refer to **table 20** on **page 215**.

Please see **pages 74** to **76** for housing bore requirements.

Dimensions Shaft diameter d_1	Bore diameter D	Bore depth B	**Design**	**Lip material**	**Designation**
mm			–	–	–
230	269	22	HS5	R	**230×269×22 HS5 R**
240	279	22	HS5	R	**240×279×22 HS5 R**
245	290	15	HS4	V	**245×290×15 HS4 V**
260	285,40	12,70	HS5	R	**260×285×13 HS5 R**
280	325	24	HS5	R	**280×325×24 HS5 R**
310	354	20	HS5	R	**310×354×20 HS5 R**
315	355	16	HS4	V	**315×355×16 HS4 V**
325	368	20	HS5	R	**325×368×20 HS5 R**
350	400	25,40	HS5	R	**350×400×25 HS5 R**
360	390	18	HS5	H	**360×390×18 HS5 H**
390	434	20	HS5	R	**390×434×20 HS5 R**
400	444	20	HS5	R	**400×444×20 HS5 R**
	447	20	HS5	R	**400×447×20 HS5 R**
	450	25	HS5	R	**400×450×25 HS5 R**
410	454	20	HS5	R	**410×454×20 HS5 R**
470	520	20,70	HS4	R	**470×520×21 HS4 R**
475	525	25	HS4	R	**475×525×25 HS4 R**
480	530	25	HS5	R	**480×530×25 HS5 R**
490	530	20,50	HS5	D	**490×530×21 HS5 D**
515	555	20	HS5	R	**515×555×20 HS5 R**
519	560	25	HS5	D	**519×560×25 HS5 D**
520	570	24	HS5	R	**520×570×24 HS5 R**

Dimensions Shaft diameter d_1	Bore diameter D	Bore depth B	Design	Lip material	Designation
mm			–	–	–
525	575	20,70	HS4	R	**525×575×21 HS4 R**
530	575	20	HS5	R	**530×575×20 HS5 R**
540	584	20	HS4	R	**540×584×20 HS4 R**
700	740	20	HS5	D	**700×740×20 HS5 D**
710	760	25	HS5	D	**710×760×25 HS5 D**
712	757	20,50	HS5	D	**712×757×21 HS5 D**
778	818	20,50	HS5	D	**778×818×21 HS5 D**
780	830	22	HS5	R	**780×830×22 HS5 R**
910	966	17,86	HS5	R	**910×966×18 HS5 R**
978	1 018	18	HS5	R	**978×1018×18 HS5 R**
1 055	1 100 1 100	25 25	HS5 HS5	R D	**1055×1100×25 HS5 R** **1055×1100×25 HS5 D**

Radial shaft seals – HS4 and HS5 – inch dimensions
d_1 **6.438– 72.750** in.

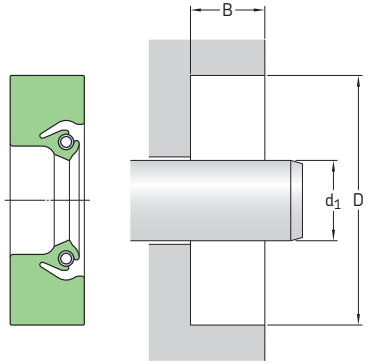

The table includes only a selection of sizes. For the full size range, please refer to **table 20** on **page 215**.

Please see **pages 74** to **76** for housing bore requirements.

Dimensions Shaft diameter d_1	Bore diameter D	Bore depth B	**Design**	**Lip material**	**Designation**
in./*mm*			–	–	–
6.438 *163,53*	7.688 *195,28*	0.625 *15,88*	HS5	R	**596043**
7.125 *180,98*	8.125 *206,38*	0.500 *12,70*	HS5	R	**595761**
7.188 *182,58*	8.640 *219,46*	0.625 *15,88*	HS5	R	**595643**
7.500 *190,50*	8.750 *222,25*	0.625 *15,88*	HS5	D	**595822**
7.750 *196,85*	8.750 *222,25*	0.625 *15,88*	HS5	D	**595813**
8.000 *203,20*	9.500 *241,30*	0.625 *15,88*	HS5	R	**595404**
8.625 *219,08*	10.125 *257,18*	0.609 *15,47*	HS5	R	**595566**
9.000 *228,60*	10.500 *266,70*	0.625 *15,88*	HS5	R	**594641**
10.250 *260,35*	12.017 *305,23*	0.750 *19,05*	HS5	R	**1025435**
11.250 *285,75*	12.750 *323,85*	0.625 *15,88*	HS5	R	**1125235**
11.500 *292,10*	13.250 *336,55*	0.750 *19,05*	HS5	R	**594850**
12.000 *304,80*	13.000 *330,20*	0.500 *12,70*	HS5	R	**1200015**
12.250 *311,15*	13.750 *349,25*	0.750 *19,05*	HS5	R	**1225125**
13.375 *339,73*	14.875 *377,83*	0.625 *15,88*	HS5	R	**1338235**

Dimensions Shaft diameter d_1	Bore diameter D	Bore depth B	Design	Lip material	Designation
in./*mm*			–	–	–
13.500 *342,90*	15.000 *381,00*	0.625 *15,88*	HS5	D	**1350235**
13.985 *355,22*	15.500 *393,70*	0.625 *15,88*	HS4	R	**526447**
14.361 *364,77*	15.748 *400,00*	0.709 *18,01*	HS4	R	**595175**
15.748 *400,00*	17.717 *450,01*	0.890 *22,61*	HS4	R	**1574443**
16.000 *406,40*	17.000 *431,80*	0.500 *12,70*	HS4	R	**1600014**
20.000 *508,00*	22.000 *558,80*	0.500 *12,70*	HS5	R	**595044**
21.000 *533,40*	23.000 *584,20*	0.813 *20,65*	HS4	R	**526719**
21.750 *552,45*	23.250 *590,55*	0.625 *15,88*	HS5	R	**593520**
24.000 *609,60*	25.500 *647,70*	0.750 *19,05*	HS5	R	**593519**
25.000 *635,00*	27.000 *685,80*	0.875 *22,23*	HS5	R	**593183**
27.000 *685,80*	29.000 *736,60*	0.813 *20,65*	HS5	R	**2700555**
33.000 *838,20*	34.250 *869,95*	0.625 *15,88*	HS5	D	**530414**
53.000 *1346,20*	54.875 *1393,83*	0.813 *20,65*	HS4	R	**595881**
72.750 *1847.85*	74.000 *1879.60*	0.719 *18.26*	HS5	R	**7275135**

Radial shaft seals – HS6, HS7 and HS8 – metric dimensions
d_1 **145 – 460** mm

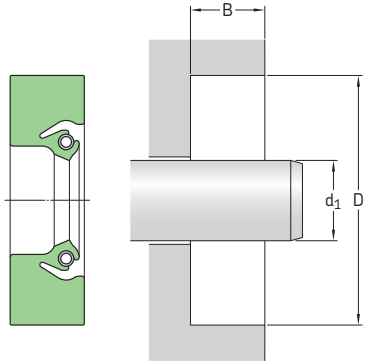

The table includes only a selection of sizes. For the full size range, please refer to **table 20** on **page 215**.

Please see **pages 74** to **76** for housing bore requirements.

Dimensions Shaft diameter d_1	Bore diameter D	Bore depth B	**Design**	**Lip material**	**Designation**
mm			–	–	–
145	175	14	HS8	R	**145×175×14 HS8 R**
150	180	15,88	HS8	R	**150×180×16 HS8 R**
160	200	15,88	HS8	D	**160×200×16 HS8 D**
170	200	16	HS8	V	**170×200×16 HS8 V**
180	222	16	HS7	R	**180×222×16 HS7 R**
185	220	12,70	HS8	R	**185×220×13 HS8 R**
186	226	16	HS8	R	**186×226×16 HS8 R**
190	220	16	HS8	R	**190×220×16 HS8 R**
	230	16	HS8	R	**190×230×16 HS8 R**
200	238	19	HS6	R	**200×238×19 HS6 R**
	238,10	19,10	HS8	R	**200×238×19 HS8 R**
220	250	15	HS8	R	**220×250×15 HS8 R**
	250	16	HS8	D	**220×250×16 HS8 D**
	260	14,27	HS8	R	**220×260×14 HS8 R**
	260	15	HS8	R	**220×260×15 HS8 R**
	260	16	HS8	R	**220×260×16 HS8 R**
230	260	15	HS8	R	**230×260×15 HS8 R**
240	270	15	HS8	R	**240×270×15 HS8 R**
	275	15	HS8	R	**240×275×15 HS8 R**
	280	20	HS7	R	**240×280×20 HS7 R**
250	280	15	HS8	R	**250×280×15 HS8 R**
	290	15,88	HS8	R	**250×290×16 HS8 R**
260	290	16	HS8	R	**260×290×16 HS8 R**
	300	20	HS8	R	**260×300×20 HS8 R**
	304	20	HS8	R	**260×304×20 HS8 R**
265	310	22	HS7	R	**265×310×22 HS7 R**

Dimensions			Design	Lip material	Designation
Shaft diameter d_1	Bore diameter D	Bore depth B			
mm			–	–	–
266	310	20	HS8	R	**266×310×20 HS8 R**
270	310	20	HS8	R	**270×310×20 HS8 R**
280	310	15	HS8	R	**280×310×15 HS8 R**
	310	16	HS8	R	**280×310×16 HS8 R**
	320	19,05	HS8	R	**280×320×19 HS8 R**
	324	20	HS8	R	**280×324×20 HS8 R**
	325	22	HS8	H	**280×325×22 HS8 H**
290	330	20	HS8	R	**290×330×20 HS8 R**
	335	24	HS7	R	**290×335×24 HS7 R**
300	340	20	HS8	R	**300×340×20 HS8 R**
	345	22	HS7	R	**300×345×22 HS7 R**
310	340	15	HS8	V	**310×340×15 HS8 V**
	340	15	HS8	R	**310×340×15 HS8 R**
	350	20	HS8	D	**310×350×20 HS8 D**
320	360	20	HS8	R	**320×360×20 HS8 R**
	368,10	19,05	HS6	R	**320×368×19 HS6 R**
330	380	22	HS8	H	**330×380×22 HS8 H**
340	372	18	HS8	R	**340×372×18 HS8 R**
	380	20	HS8	R	**340×380×20 HS8 R**
345	390	25	HS8	R	**345×390×25 HS8 R**
350	390	18	HS8	R	**350×390×18 HS8 R**
355	393	20	HS8	R	**355×393×20 HS8 R**
360	400	18	HS8	R	**360×400×18 HS8 R**
	405	25	HS8	H	**360×405×25 HS8 H**
	410,80	22,26	HS8	R	**360×411×22 HS8 R**
380	418	19	HS7	R	**380×418×19 HS7 R**
	418	19	HS8	R	**380×418×19 HS8 R**
	420	19,05	HS8	V	**380×420×19 HS8 V**
	420	20	HS8	D	**380×420×20 HS8 D**
	420	20	HS7	R	**380×420×20 HS7 R**
	420	20	HS8	H	**380×420×20 HS8 H**
	420	20	HS8	D	**380×420×20 HS8 D**
	430	20	HS8	R	**380×430×20 HS8 R**
400	440	20	HS7	R	**400×440×20 HS7 R**
	444	13,50	HS8	R	**400×444×14 HS8 R**
	450	25	HS8	R	**400×450×25 HS8 R**
	451	22,23	HS8	R	**400×451×22 HS8 R**
410	454	19	HS8	R	**410×454×19 HS8 R**
420	460	20	HS7	R	**420×460×20 HS7 R**
430	480	22	HS8	R	**430×480×22 HS8 R**
440	480	20	HS8	R	**440×480×20 HS8 R**
	480	21	HS8	H	**440×480×21 HS8 H**
450	500	25	HS8	R	**450×500×25 HS8 R**
452	503	20,65	HS8	R	**452×503×21 HS8 R**
460	510	22	HS8	R	**460×510×22 HS8 R**

Radial shaft seals – HS6, HS7 and HS8 – metric dimensions
d_1 **480 – 3 000** mm

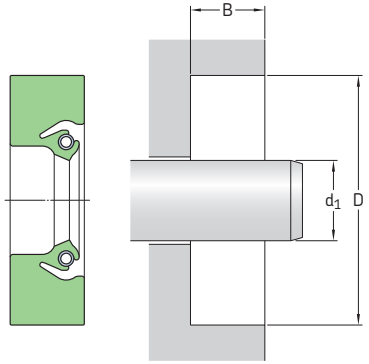

The table includes only a selection of sizes. For the full size range, please refer to **table 20** on **page 215**.

Please see **pages 74** to **76** for housing bore requirements.

Dimensions Shaft diameter d_1	Bore diameter D	Bore depth B	**Design**	**Lip material**	**Designation**
mm			–	–	–
480	530	20	HS8	R	**480×530×20 HS8 R**
490	530	20	HS8	R	**490×530×20 HS8 R**
	540	25	HS8	R	**490×540×25 HS8 R**
	541	20,70	HS6	R	**490×541×21 HS6 R**
500	550	25	HS8	R	**500×550×25 HS8 R**
510	548	24,50	HS8	R	**510×548×25 HS8 R**
515	555	20	HS8	R	**515×555×20 HS8 R**
519	560	25	HS8	D	**519×560×25 HS8 D**
530	576	21	HS8	R	**530×576×21 HS8 R**
	580	20	HS8	R	**530×580×20 HS8 R**
	580	22	HS8	R	**530×580×22 HS8 R**
	580	25	HS8	R	**530×580×25 HS8 R**
550	590	20	HS8	R	**550×590×20 HS8 R**
556	610	25,40	HS7	R	**556×610×25 HS7 R**
560	604	20	HS8	R	**560×604×20 HS8 R**
590	640	25	HS8	R	**590×640×25 HS8 R**
600	640	20	HS8	R	**600×640×20 HS8 R**
615	665	24	HS8	R	**615×665×24 HS8 R**
620	670	22	HS8	D	**620×670×22 HS8 D**
625	676	19	HS8	D	**625×676×19 HS8 D**
630	670	20	HS8	R	**630×670×20 HS8 R**
650	700	20	HS8	R	**650×700×20 HS8 R**
690	730	20	HS8	R	**690×730×20 HS8 R**

Dimensions			Design	Lip material	Designation
Shaft diameter d_1	Bore diameter D	Bore depth B			
mm			–	–	–
700	750	20	HS8	R	**700×750×20 HS8 R**
	765	25	HS8	R	**700×765×25 HS8 R**
720	771,10	21	HS8	D	**720×771×21 HS8 D**
737	790	15,88	HS6	R	**737×790×16 HS6 R**
740	790	15,88	HS8	R	**740×790×16 HS8 R**
	790	25	HS8	R	**740×790×25 HS8 R**
760	800	20,60	HS8	R	**760×800×21 HS8 R**
	810	20,60	HS8	R	**760×810×21 HS8 R**
	820	17,50	HS8	R	**760×820×18 HS8 R**
780	820	18	HS8	R	**780×820×18 HS8 R**
800	850	25,40	HS8	R	**800×850×25 HS8 R**
810	860	20,65	HS7	R	**810×860×21 HS7 R**
840	892	18	HS6	R	**840×892×18 HS6 R**
850	900	22	HS8	R	**850×900×22 HS8 R**
865	911	18	HS8	R	**865×911×18 HS8 R**
867	920	15,88	HS6	R	**867×920×16 HS6 R**
870	920	15,88	HS8	R	**870×920×16 HS8 R**
910	966	17,86	HS6	R	**910×966×18 HS6 R**
925	975	22	HS8	D	**925×975×22 HS8 D**
930	982	22,23	HS6	R	**930×982×22 HS6 R**
1 055	1 100	25	HS8	D	**1055×1100×25 HS8 D**
1 070	1 120	20	HS6	R	**1070×1120×20 HS6 R**
1 105	1 151	17,50	HS8	R	**1105×1151×18 HS8 R**
1 180	1 230	20	HS6	R	**1180×1230×20 HS6 R**
1 248	1 298	20,70	HS8	R	**1248×1298×21 HS8 R**
1 370	1 420	19,83	HS8	H	**1370×1420×20 HS8 H**
1 380	1 420	18	HS8	R	**1380×1420×18 HS8 R**
1 675	1 725	20	HS8	R	**1675×1725×20 HS8 R**
	1 725	20,62	HS8	D	**1675×1725×21 HS8 D**
1 810	1 860	20	HS8	R	**1810×1860×20 HS8 R**
	1 860	20,62	HS8	D	**1810×1860×21 HS8 D**
2 850	2 900	20,63	HS8	D	**2850×2900×21 HS8 D**
2 900	2 959	17,33	HS6	R	**2900×2959×17 HS6 R**
3 000	3 050	20,63	HS8	D	**3000×3050×21 HS8 D**

Radial shaft seals – HS6, HS7 and HS8 – inch dimensions
d_1 **5.500 – 10.250** in.

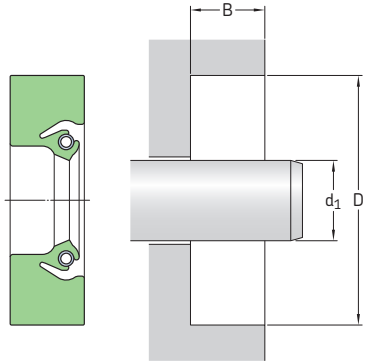

The table includes only a selection of sizes. For the full size range, please refer to **table 20** on **page 215**.

Please see **pages 74** to **76** for housing bore requirements.

Dimensions Shaft diameter d_1	Bore diameter D	Bore depth B	**Design**	**Lip material**	**Designation**
in./*mm*			–	–	–
5.500	6.500	0.500	HS8	V	**597548**
139,70	*165,10*	*12,70*			
6.000	7.250	0.625	HS8	R	**592986**
152,40	*184,15*	*15,88*			
	7.500	0.535	HS8	R	**60037**
	190,50	*13,59*			
6.300	7.874	0.596	HS8	D	**595052**
160,00	*200,00*	*15,14*			
6.438	7.688	0.625	HS7	R	**594760**
163,53	*195,28*	*15,88*			
7.000	8.000	0.500	HS8	D	**70008**
177,80	*203,20*	*12,70*			
7.250	8.250	0.500	HS8	R	**595012**
184,15	*209,55*	*12,70*			
	8.250	0.500	HS7	R	**528377**
	209,55	*12,70*			
7.625	8.875	0.625	HS8	R	**595207**
193,68	*225,43*	*15,88*			
7.750	8.750	0.500	HS8	R	**529601**
196,85	*222,25*	*12,70*			
8.000	9.000	0.625	HS8	V	**594935**
203,20	*228,60*	*15,88*			
	9.250	0.625	HS8	R	**592376**
	234,95	*15,88*			
	10.000	0.750	HS7	R	**590326**
	254,00	*19,05*			
8.250	9.500	0.625	HS7	R	**592180**
209,55	*241,30*	*15,88*			
	10.250	0.750	HS7	R	**591929**
	260,35	*19,05*			

Dimensions Shaft diameter d_1	Bore diameter D	Bore depth B	Design	Lip material	Designation
in./*mm*			–	–	–
8.500 *215,90*	9.500 *241,30*	0.500 *12,70*	HS8	V	**594745**
	10.000 *254,00*	0.625 *15,88*	HS8	R	**594318**
8.750 *222,25*	9.750 *247,65*	0.500 *12,70*	HS8	V	**87440**
	10.000 *254,00*	0.625 *15,88*	HS8	R	**592627**
	10.750 *273,05*	0.750 *19,05*	HS7	R	**597553**
8.938 *227,03*	9.938 *254,43*	0.625 *15,88*	HS7	R	**595004**
9.000 *228,60*	10.250 *260,35*	0.625 *15,88*	HS7	R	**592581**
	10.500 *266,70*	0.750 *19,05*	HS8	R	**592600**
	10.674 *271,12*	0.703 *17,86*	HS8	R	**592779**
9.250 *234,95*	11.250 *285,75*	0.625 *15,88*	HS7	R	**593625**
	11.250 *285,75*	0.750 *19,05*	HS8	R	**592858**
9.438 *239,73*	10.688 *271,48*	0.625 *15,88*	HS7	R	**592126**
9.500 *241,30*	11.000 *279,40*	0.625 *15,88*	HS8	R	**531331**
	11.500 *292,10*	0.625 *15,88*	HS8	R	**597507**
9.750 *247,65*	10.750 *273,05*	0.500 *12,70*	HS7	R	**592988**
	11.250 *285,75*	0.625 *15,88*	HS7	R	**593385**
9.938 *252,43*	11.188 *284,18*	0.625 *15,88*	HS8	R	**594753**
	11.438 *290,53*	0.750 *19,05*	HS8	R	**592731**
10.000 *254,00*	11.000 *279,40*	0.562 *14,28*	HS8	R	**1000018**
	11.250 *285,75*	0.625 *15,88*	HS7	R	**1000117**
	11.500 *292,10*	0.750 *19,05*	HS7	R	**1000257**
	12.000 *304,80*	0.625 *15,88*	HS7	R	**1000527**
	12.000 *304,80*	0.625 *15,88*	HS7	V	**1000025**
10.125 *257,18*	11.750 *298,45*	0.750 *19,05*	HS8	R	**1012338**
10.188 *258,78*	11.188 *284,18*	0.500 *12,70*	HS7	R	**1019017**
10.250 *260,35*	11.250 *285,75*	0.625 *15,88*	HS7	R	**1025017**
	12.000 *304,80*	0.625 *15,88*	HS8	R	**1025368**

Radial shaft seals – HS6, HS7 and HS8 – inch dimensions
d_1 **10.438 – 14.000** in.

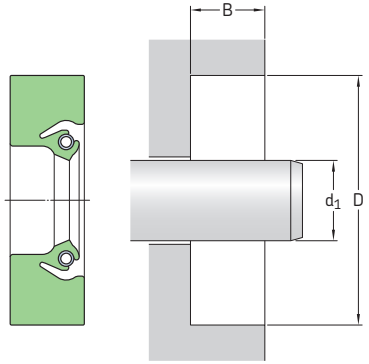

The table includes only a selection of sizes. For the full size range, please refer to **table 20** on **page 215**.

Please see **pages 74** to **76** for housing bore requirements.

Dimensions Shaft diameter d_1	Bore diameter D	Bore depth B	**Design**	**Lip material**	**Designation**
in./*mm*			–	–	–
10.438	11.688	0.875	HS8	R	**1043148**
265,13	*296,88*	*22,23*			
10.500	11.500	0.500	HS8	R	**1050018**
266,70	*292,10*	*12,70*			
	12.000	0.750	HS8	R	**1050258**
	304,80	*19,05*			
	12.000	0.750	HS7	R	**1050257**
	304,80	*19,05*			
10.710	12.511	0.625	HS8	R	**1071448**
272,03	*317,78*	*15,88*			
10.875	12.875	0.578	HS6	R	**527099**
276,23	*327,03*	*14,68*			
11.000	12.000	0.625	HS7	R	**1100027**
279,40	*304,80*	*15,88*			
	12.500	0.750	HS8	R	**1100258**
	317,50	*19,05*			
	12.500	0.750	HS7	R	**1100257**
	317,50	*19,05*			
	13.000	0.750	HS8	R	**1100538**
	330,20	*19,05*			
11.125	12.375	0.625	HS8	R	**1113118**
282,58	*314,33*	*15,88*			
11.250	12.750	0.750	HS7	R	**1125257**
285,75	*323,85*	*19,05*			
11.375	12.375	0.500	HS7	R	**1138017**
288,93	*314,33*	*12,70*			
11.422	12.922	0.750	HS7	R	**1142257**
290,12	*328,22*	*19,05*			
11.500	12.500	0.500	HS8	R	**1150018**
292,10	*317,50*	*12,70*			
	13.000	0.750	HS8	R	**1150258**
	330,20	*19,05*			

Dimensions			Design	Lip material	Designation
Shaft diameter d_1	Bore diameter D	Bore depth B			
in./*mm*			–	–	–
11.750	13.250	0.750	HS7	R	**1175257**
298,45	*336,55*	*19,05*			
11.875	13.125	0.625	HS8	R	**1188118**
301,63	*333,38*	*15,88*			
12.000	13.000	0.500	HS8	D	**1200028**
304,80	*330,20*	*12,70*			
	13.500	0.750	HS8	R	**1200258**
	342,90	*19,05*			
	14.000	0.813	HS8	R	**1200558**
	355,60	*20,65*			
12.375	13.875	0.750	HS7	R	**1238257**
314,33	*352,43*	*19,05*			
12.500	13.500	0.500	HS8	R	**1250018**
317,50	*342,90*	*12,70*			
	14.000	0.750	HS7	R	**1250257**
	355,60	*19,05*			
12.625	14.125	0.750	HS7	R	**1263237**
320,68	*358,78*	*19,05*			
12.750	14.250	0.625	HS8	R	**1275238**
323,85	*361,95*	*15,88*			
	14.250	0.750	HS7	R	**1275257**
	361,95	*19,05*			
13.000	14.500	0.625	HS7	R	**1300237**
330,20	*368,30*	*15,88*			
	14.500	0.750	HS8	R	**1300258**
	368,30	*19,05*			
	15.000	0.750	HS8	R	**1300548**
	381,00	*19,05*			
13.125	15.125	0.750	HS8	R	**592920**
333,38	*384,18*	*19,05*			
13.250	14.750	0.625	HS7	R	**1325237**
336,55	*374,65*	*15,88*			
13.375	14.875	0.625	HS8	R	**594057**
339,73	*377,83*	*15,88*			
13.500	15.000	0.750	HS8	R	**1350258**
342,90	*381,00*	*19,05*			
	15.500	0.625	HS7	R	**1350527**
	393,70	*15,88*			
13.750	15.250	0.750	HS7	R	**1375257**
349,25	*387,35*	*19,05*			
13.875	15.375	0.750	HS7	R	**1388257**
352,43	*390,53*	*19,05*			
14.000	15.000	0.500	HS8	R	**1400018**
355,60	*381,00*	*12,70*			
	15.500	0.750	HS8	R	**1400258**
	393,70	*19,05*			
	15.500	0.750	HS7	R	**1400257**
	393,70	*19,05*			
	15.500	0.750	HS8	V	**594261**
	393,70	*19,05*			
	16.000	0.813	HS7	R	**1400557**
	406,40	*20,65*			
	16.000	1.000	HS8	R	**1400588**
	406,40	*25,40*			

Radial shaft seals – HS6, HS7 and HS8 – inch dimensions
d_1 **14.250 – 20.000** in.

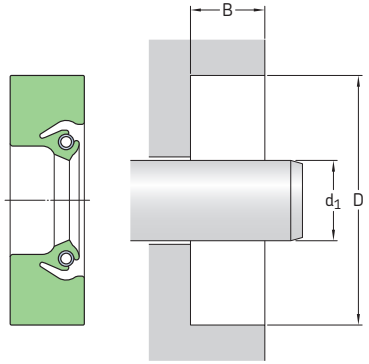

The table includes only a selection of sizes. For the full size range, please refer to **table 20** on **page 215**.

Please see **pages 74** to **76** for housing bore requirements.

Dimensions Shaft diameter d_1	Bore diameter D	Bore depth B	**Design**	**Lip material**	**Designation**
in./*mm*			–	–	–
14.250	16.250	1.000	HS7	R	**1425587**
361,95	*412,75*	*25,40*			
14.500	15.500	0.500	HS8	R	**1450018**
368,30	*393,70*	*12,70*			
14.625	16.125	0.750	HS7	R	**1463257**
371,48	*409,58*	*19,05*			
15.000	16.500	0.750	HS7	R	**1500257**
381,00	*419,10*	*19,05*			
	17.000	0.813	HS8	R	**1500558**
	431,80	*20,65*			
15.250	16.625	0.500	HS8	R	**1525158**
387,35	*422,28*	*12,70*			
	16.750	0.750	HS7	R	**1525257**
	425,45	*19,05*			
15.500	17.000	0.750	HS7	R	**1550257**
393,70	*431,80*	*19,05*			
	17.500	0.813	HS7	R	**1550557**
	444,50	*20,65*			
15.750	17.250	0.685	HS8	R	**1575248**
400,05	*438,15*	*19,05*			
16.000	17.000	0.500	HS8	R	**1600018**
406,40	*431,80*	*12,70*			
	17.000	0.500	HS8	D	**1600019**
	431,80	*12,70*			
	17.500	0.750	HS8	R	**1600258**
	444,50	*19,05*			
	18.000	0.750	HS8	R	**1600578**
	457,20	*19,05*			
	18.000	0.813	HS8	R	**1600558**
	457,20	*20,65*			
16.500	17.500	0.500	HS7	R	**1650017**
419,10	*444,50*	*12,70*			
	18.500	0.813	HS7	R	**1650557**
	469,90	*20,65*			

Dimensions Shaft diameter d_1	Bore diameter D	Bore depth B	Design	Lip material	Designation
in./*mm*			–	–	–
16.750 *425,45*	18.250 *463,55*	0.750 *19,05*	HS7	R	**1675257**
16.875 *428,63*	18.375 *466,73*	0.500 *12,70*	HS7	R	**1688217**
17.500 *444,50*	19.500 *495,30*	1.000 *25,40*	HS7	R	**1750587**
17.716 *449,99*	19.716 *500,79*	0.813 *20,65*	HS7	R	**1771557**
17.750 *450,85*	19.750 *501,65*	0.813 *20,65*	HS7	R	**1775557**
18.000 *457,20*	19.000 *482,60*	0.500 *12,70*	HS8	R	**1800018**
	19.500 *495,30*	0.750 *19,05*	HS7	R	**1800257**
	20.000 *508,00*	0.813 *20,65*	HS8	R	**1800558**
18.250 *463,55*	19.750 *501,65*	0.750 *19,05*	HS7	R	**1825257**
	20.250 *514,35*	0.813 *20,65*	HS7	R	**1825557**
18.375 *466,73*	20.375 *517,53*	0.813 *20,65*	HS8	R	**1838558**
	20.500 *520,70*	0.875 *22,23*	HS8	R	**1837608**
18.500 *469,90*	20.000 *508,00*	0.750 *19,05*	HS8	D	**1850248**
	20.500 *520,70*	1.000 *25,40*	HS7	R	**1850587**
18.750 *476,25*	20.250 *514,35*	0.750 *19,05*	HS7	R	**1875257**
18.937 *481,00*	20.937 *531,80*	0.813 *20,65*	HS7	R	**1894557**
19.000 *482,60*	20.500 *520,70*	0.750 *19,05*	HS8	R	**1900258**
	21.000 *533,40*	0.813 *20,65*	HS7	R	**1900557**
19.500 *495,30*	21.500 *546,10*	0.813 *20,65*	HS7	R	**1950557**
	21.500 *546,10*	0.813 *20,65*	HS8	R	**1950518**
19.750 *501,65*	21.750 *552,45*	0.625 *15,88*	HS8	R	**1975528**
20.000 *508,00*	21.500 *546,10*	0.625 *15,88*	HS8	R	**2000238**
	21.500 *546,10*	0.750 *19,05*	HS8	R	**2000258**
	22.000 *558,80*	0.625 *15,88*	HS7	R	**2000527**
	22.000 *558,80*	1.000 *25,40*	HS7	R	**2000587**
	22.125 *561,98*	0.916 *23,27*	HS8	R	**2000648**
	22.125 *561,98*	0.916 *23,27*	HS8	D	**2000649**

Radial shaft seals – HS6, HS7 and HS8 – inch dimensions
d_1 **20.500 – 33.125** in.

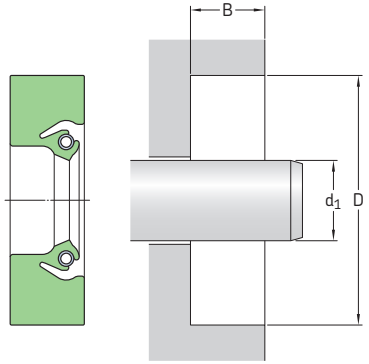

The table includes only a selection of sizes. For the full size range, please refer to **table 20** on **page 215**.

Please see **pages 74** to **76** for housing bore requirements.

Dimensions Shaft diameter d_1	Bore diameter D	Bore depth B	**Design**	**Lip material**	**Designation**
in./*mm*			–	–	–
20.500	22.500	0.875	HS8	R	**2050568**
520,70	*571,50*	*22,23*			
20.625	22.625	0.813	HS7	R	**2063557**
523,88	*574,68*	*20,65*			
21.000	22.580	0.578	HS8	R	**2100228**
533,40	*573,53*	*14,68*			
	23.000	0.750	HS8	R	**2100518**
	584,20	*19,05*			
	23.000	0.813	HS8	V	**594201**
	584,20	*20,65*			
	23.000	0.813	HS7	R	**2100557**
	584,20	*20,65*			
22.000	23.500	0.750	HS7	R	**2200257**
558,80	*596,90*	*19,05*			
	23.500	0.750	HS8	R	**2200218**
	596,90	*19,05*			
	24.000	0.813	HS8	V	**2200555**
	609,60	*20,65*			
	24.000	0.813	HS8	D	**2200558**
	609,60	*20,65*			
	24.000	0.813	HS7	R	**2200557**
	609,60	*20,65*			
22.250	24.250	0.813	HS7	R	**2225557**
565,15	*615,95*	*20,65*			
22.500	24.500	0.813	HS7	R	**2250557**
571,50	*622,30*	*20,65*			
22.638	24.638	0.750	HS8	D	**2263548**
575,00	*625,80*	*19,00*			
22.750	24.750	0.813	HS7	R	**2275557**
577,85	*628,65*	*20,65*			
22.875	24.875	0.813	HS7	R	**2288557**
581,03	*631,83*	*20,65*			

Dimensions Shaft diameter d_1	Bore diameter D	Bore depth B	Design	Lip material	Designation
in./*mm*			–	–	–
23.000 *584,20*	25.000 *635,00*	0.813 *20,65*	HS8	R	**2300558**
	25.000 *635,00*	0.813 *20,65*	HS8	D	**2300559**
23.208 *589,48*	25.208 *640,28*	0.813 *20,65*	HS8	R	**2320558**
23.750 *603,25*	25.750 *654,05*	0.813 *20,65*	HS8	R	**2575558**
24.000 *609,60*	25.500 *647,70*	0.750 *19,05*	HS8	R	**2400258**
	25.500 *647,70*	0.750 *19,05*	HS7	R	**2400257**
	26.000 *660,40*	1.000 *25,40*	HS8	D	**2400598**
24.500 *622,30*	26.000 *660,40*	0.750 *19,05*	HS7	R	**2450257**
25.000 *635,00*	26.500 *673,10*	0.750 *19,05*	HS7	D	**2500247**
	27.000 *685,80*	0.813 *20,65*	HS7	R	**2500557**
26.000 *660,40*	28.125 *714,38*	0.916 *23,27*	HS8	R	**2600648**
26.375 *669,93*	27.627 *701,73*	0.625 *15,88*	HS8	R	**2637118**
27.000 *685,80*	29.000 *736,60*	0.813 *20,65*	HS8	R	**2700558**
27.500 *698,50*	28.750 *730,25*	0.625 *15,88*	HS7	R	**2750117**
28.000 *711,20*	30.000 *762,00*	0.813 *20,65*	HS8	R	**2800558**
28.875 *733,43*	30.875 *784,23*	0.813 *20,65*	HS7	R	**2888557**
29.000 *736,60*	31.000 *787,40*	0.813 *20,65*	HS7	V	**2900556**
29.750 *755,65*	31.750 *806,45*	0.813 *20,65*	HS8	R	**2975558**
30.000 *762,00*	31.250 *793,75*	0.625 *15,88*	HS8	R	**3000118**
	32.000 *812,80*	1.000 *25,40*	HS8	H	**3000519**
30.750 *781,05*	31.750 *806,45*	0.500 *12,70*	HS7	R	**3075017**
32.375 *822,33*	34.375 *873,13*	1.000 *25,40*	HS8	H	**3237519**
32.500 *825,50*	34.500 *876,30*	0.916 *23,27*	HS7	R	**3250577**
33.125 *841,38*	35.125 *892,18*	0.813 *20,65*	HS8	R	**3312558**

Radial shaft seals – HS6, HS7 and HS8 – inch dimensions
d_1 **34.500 – 171.900** in.

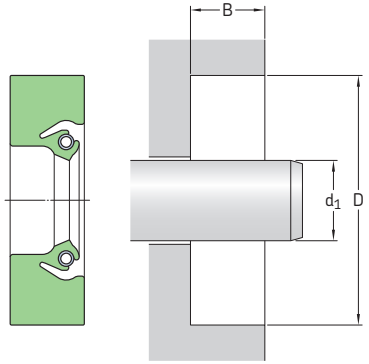

The table includes only a selection of sizes. For the full size range, please refer to **table 20** on **page 215**.

Please see **pages 74** to **76** for housing bore requirements.

Dimensions Shaft diameter d_1	Bore diameter D	Bore depth B	**Design**	**Lip material**	**Designation**
in./*mm*			–	–	–
34.500 *876,30*	36.500 *927,10*	0.813 *20,65*	HS7	R	**3450557**
38.000 *965,20*	40.000 *1 016,00*	0.813 *20,65*	HS7	R	**3800557**
38.500 *977,90*	40.500 *1 028,70*	0.813 *20,65*	HS7	R	**3850557**
40.250 *1 022,35*	41.750 *1 060,45*	0.750 *19,05*	HS8	R	**4025258**
48.000 *1 219,20*	50.000 *1 270,00*	0.813 *20,65*	HS8	R	**4800518**
51.000 *1 295,40*	53.000 *1 346,20*	0.813 *20,65*	HS8	R	**5100558**
53.000 *1 346,20*	54.875 *1 393,83*	0.813 *20,65*	HS8	R	**5300488**
54.000 *1 371,60*	56.000 *1 422,40*	0.813 *20,65*	HS7	R	**5400557**
58.500 *1 485,90*	60.500 *1 536,70*	0.813 *20,65*	HS8	R	**5850518**
60.250 *1 530,35*	62.313 *1 582,75*	0.750 *19,05*	HS8	R	**531572**
62.598 *1 589,99*	64.598 *1 640,79*	0.813 *20,65*	HS7	R	**6259557**
69.000 *1 752,60*	71.000 *1 803,40*	0.813 *20,65*	HS8	R	**6900558**
72.500 *1 841,50*	74.500 *1 892,30*	0.813 *20,65*	HS8	R	**7250558**
75.000 *1 905,00*	77.000 *1 955,80*	0.815 *20,70*	HS8	R	**7500518**

Dimensions Shaft diameter d_1	Bore diameter D	Bore depth B	Design	Lip material	Designation
in./*mm*			–	–	–
76.000 *1 930,40*	78.000 *1 981,20*	0.813 *20,65*	HS8	R	**594316**
81.000 *2 057,40*	83.000 *2 108,20*	0.813 *20,65*	HS8	R	**8100558**
87.750 *2 228,85*	89.750 *2 279,65*	0.813 *20,65*	HS8	R	**8775558**
94.750 *2 406,65*	97.000 *2 463,80*	0.688 *17,48*	HS8	R	**9475658**
98.625 *2 505,08*	100.625 *2 555,88*	0.813 *20,65*	HS8	R	**9862568**
106.000 *2 692,40*	107.000 *2 717,80*	0.500 *12,70*	HS8	R	**594926**
125.000 *3 175,00*	126.250 *3 206,75*	0.625 *15,88*	HS8	R	**595208**
171.900 *4 366,26*	173.876 *4 416,45*	0.813 *20,65*	HS8	R	**595214**



Cassette seals

General 322

Design features 323

Testing 323

Installation 323

SKF Mudblock seal designs MUD5 and MUD7 324

Cassette seals

General

The design of SKF Mudblock cassette seals has been optimized to provide excellent retention of either grease or oil and maximum protection against liquid or solid contaminants (→ **fig. 1**). The seals are made to order to meet the demands of each specific application.

SKF Mudblock seals are widely used in wheel-end applications such as the front and rear axles of, for example:

- tractors
- agricultural machinery
- construction equipment
- forestry equipment
- off-highway trucks

Fig. 1

SKF Mudblock designs for oil lubricated applications

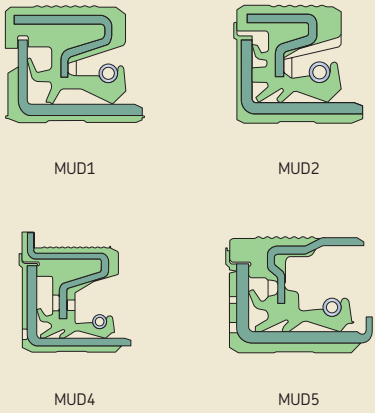

SKF Mudblock designs for grease lubricated applications

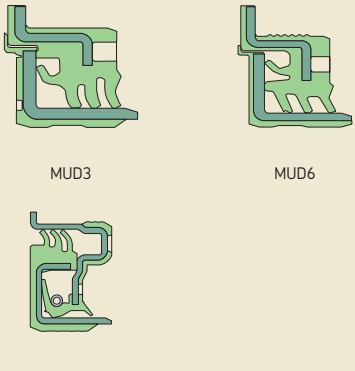

Design features

All SKF Mudblock seals are designed with an integrated wear sleeve and a rubber inside diameter, but can have any one of a number of sealing lip and auxiliary lip configurations. The elastomeric material is normally nitrile rubber, but the seals are also available in other compounds including fluoro rubber, hydrogenated nitrile rubber or polyacrylate to meet the demands of different operating conditions. For more information, please refer to paragraph *Sealing lip materials*, starting on **page 30**.

Testing

SKF conducts tests in climatic cells of the SKF Mudblock seals at global testing facilities in USA, Europe and Asia. The tests include both our own tests and tests according to customer specifications. SKF Mudblock seals are engineered using Finite Element Analysis (FEA) to obtain optimum design solutions. FEA evaluates:

- stress/strain behavior of the sealing lip in deformed condition
- lip contact forces
- lip opening pressure
- displacement of the lips
- assembly simulation of seal and sleeve

Installation

Proper installation of SKF Mudblock seals is important for optimal functioning of the seals. Please contact SKF for information and support regarding the design of installation tools for SKF Mudblock seals.

SKF Mudblock seal designs MUD5 and MUD7

SKF Mudblock seal designs MUD5 and MUD7 are a new generation of radial shaft sealing units, specifically developed for heavy-duty applications in harsh environments and tough operating conditions.

SKF Mudblock seals MUD5 (→ **fig. 2**) are designed for oil lubricated applications and provide features including:

- half metal / half rubber outside diameter for reliable seal retention in the bore as well as improved sealing performance
- spring-loaded main lip with SKF Wave lip design for bi-directional pumping action
- axial and auxiliary radial lips for contaminant exclusion
- integrated wear sleeve, curled for a reliable unitized solution to facilitate installation and prevent damage to the lips during transportation, handling and installation
- centrifugal flap for exclusion of contaminants
- bumper maintaining the relative position between the seal and the sleeve as well as acting as a barrier against contaminants
- rubber covered inside diameter for high sealing ability and easy installation

SKF Mudblock seals MUD7 (→ **fig. 3**) are designed for use in grease lubricated applications and provide features including:

- half metal / half rubber outside diameter for reliable seal retention in the bore as well as improved sealing performance
- rubber covered inside diameter for improved sealing performance and easy installation
- integrated wear sleeve
- SKF patented lip design for extended bearing service life
- bumper maintaining the relative position between the seal and the sleeve as well as acting as a barrier against contaminants
- auxiliary radial lips for contaminant exclusion

The SKF patented lip design has a special geometry combining both a spring-loaded radial lip and an axial lip. This design enables excess pressure inside the bearing chamber to pass the lip. Thus, the bearing can run cooler, resulting in extended service life.

Fig. 2

SKF Mudblock seal MUD5

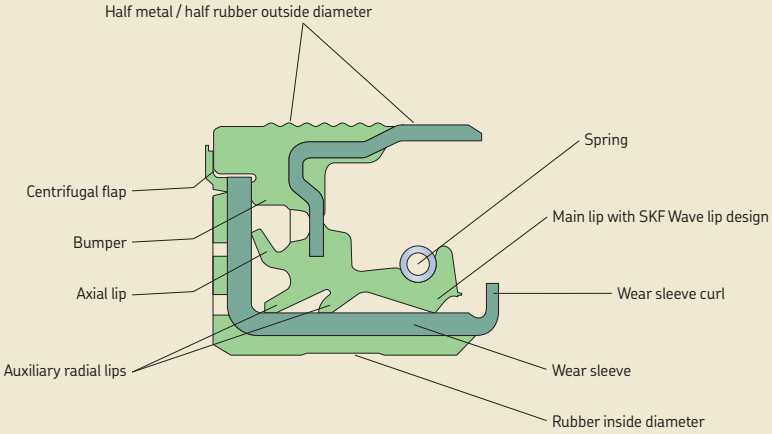

Fig. 3

SKF Mudblock seal MUD7

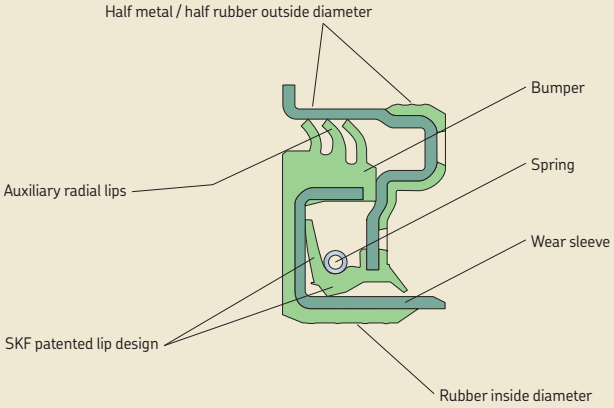



Wear sleeves

General **328**

SKF Speedi-Sleeve **329**
Features 329
Size range 329
SKF Speedi-Sleeve Gold 330
Test results 330
Selecting the right size 330
Installing SKF Speedi-Sleeve 331
Removing SKF Speedi-Sleeve 333
4.1 Product table: SKF Speedi-Sleeve 334

Wear sleeves for heavy industrial applications (LDSLV) **356**
General 356
Designs and features 357
Using LDSLV designs 358
Installation 358
Removal 358
4.2 Product table: LDSLV3 and LDSLV4 360

Wear sleeves

General

To seal efficiently, radial shaft seals must run against a smooth, round counterface. If the counterface becomes worn, the seals will no longer be able to fulfil their function, which is to retain lubricant and exclude contaminants.

Typically, the counterface becomes scored when a contaminant particle is caught under the sealing lip and abrades a track as the shaft rotates. As this continues, the seal will enable more particles to pass or get stuck, and seal efficiency deteriorates, eventually leading to malfunction of the component that the seal is meant to protect. To rectify the situation, it is necessary to repair the shaft surface since a seal replacement will not be sufficient. To repair the shaft, it is usually necessary to disassemble the machine in order to either replace the shaft or grind down the counterface until it is again within specification.

SKF Speedi-Sleeve (→ **fig. 1**) is a well-proven solution to overcome problems with worn shafts without having to disassemble the shaft or changing the seal dimensions, while offering an excellent sealing surface. Now, SKF has developed a patent pending new generation SKF Speedi-Sleeve with features providing an even further enhanced sealing system performance. Using SKF Speedi-Sleeve, combined with an SKF radial shaft seal, customers will benefit from a more consistent and increased durability of the sealing system. This will enable a more stable maintenance planning with improved predictability of the system service life. SKF Speedi-Sleeve is available for shaft diameters up to approximately 203 mm *(8 in.)*. For larger shaft diameters, SKF offers wear sleeves for heavy industrial applications, LDSLV3 and LDSLV4 (→ **figs. 2** and **3**). See **page 356** for information regarding LDSLV designs.

Fig. 1

SKF Speedi-Sleeve

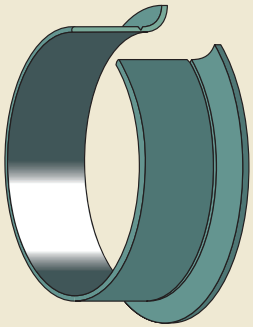

Fig. 2

LDSLV3 wear sleeve

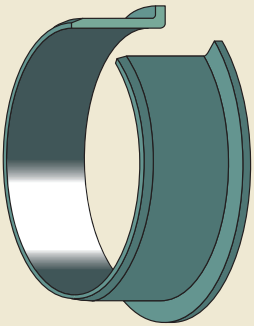

SKF Speedi-Sleeve

This thin-walled sleeve (0,28 mm *(0.011 in.)*), developed by SKF, is simply pushed in position over the worn area, providing a counterface surface that is optimized for radial shaft seals.

There is no shaft disassembly or machining involved and costly downtime is minimized. Since the same sized seal as the original can be used, there is no need to search for other seals, or keep a stock of different sizes.

No special equipment is required since the installation tool is supplied with the sleeve. A mallet and a pair of pliers are all that is needed for the installation.

Features

The new generation SKF Speedi-Sleeve uses a proprietary stainless steel material and manufacturing process, resulting in an optimized seal counterface surface that minimizes wear on both sleeve and sealing lip. The proprietary material provides increased strength and excellent ductility properties of the sleeve. Imperceptible lubricant pockets enable the lubricant to reside on the sleeve and thereby prevent dry running of the sealing lip that otherwise can create excessive wear. The contact surface is wear resistant and machined to minimize directionality (0° ±0,05) with a finish of R_a 0,25 to 0,5 µm *(10 to 20 µin.)*. This is, in fact, a better counterface surface than can often be achieved on a shaft.

SKF Speedi-Sleeve has a removable flange to simplify installation (→ **fig. 4**). The flange can most often be left intact, but in applications where the flange will interfere with other system components, it should be removed so as not to cause friction heat and wear debris. The flange should also be removed in applications where it may reduce the supply of lubricant to the seal. This would reduce the cooling effect of the lubricant, resulting in elevated underlip temperatures and premature ageing of the seal material.

If the flange is to be removed, it should be cut from the outside diameter into the radius in one location prior to installation. The flange can then be twisted and raised up after installation and grasped with a pair of long-nosed pliers and twisted into a coil.

Size range

The standard size range covers sleeves for shaft diameters from 11,99 to 203,33 mm *(0.472 to 8 in.)*. Depending on production quantities, non-standard sizes can be manufactured. Each sleeve is designed to fit a specific shaft diameter range, usually above and below the nominal shaft diameter. This permits some flexibility to accommodate variations in the actual shaft diameter.

Fig. 3

LDSLV4 wear sleeve

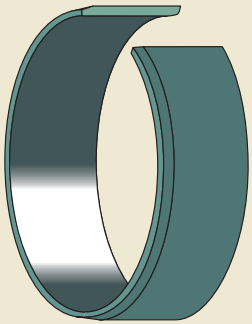

Fig. 4

SKF Speedi-Sleeve removable flange

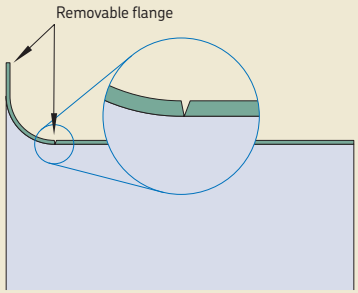

SKF Speedi-Sleeve Gold

The new generation of SKF Speedi-Sleeve is also available in the Gold version, designed for highly abrasive applications. A thin, metallic coating applied to the base stainless steel imparts a gold colour and significantly increases durability. The original seal size can still be used. SKF Speedi-Sleeve Gold is particularly effective in environments where there are abrasive contaminants, especially when combined with a seal manufactured from the SKF fluoro rubber material, SKF Duralife.

Test results

The previous and new generation of SKF Speedi-Sleeve products were tested for abrasion resistance under both coarse and fine dust conditions. A 500 hour contamination test (**→ diagram 1**) showed that when compared to the previous generation sleeve, the new generation SKF Speedi-Sleeve reduced abrasion by a factor of 1,5 and was still operating efficiently.

To test sealing system effectiveness, a 2 000 hour life test was performed (**→ diagram 2**) using SKF Speedi-Sleeve new and previous generation products and SKF Wave seals made from the SKF fluoro rubber material SKF Duralife. The test results showed that SKF Speedi-Sleeve new generation reduced the sealing lip wear and the variation in the wear rate by approximately 30% compared to the previous generation sleeve and outperformed a chromium-plated surface by a factor of 2. This reduction improves the sealing system reliability as well as the predictability of the system service life.

Both tests were carried out under the same operating conditions:

- temperatures up to 110 °C *(225 °F)*
- linear shaft speeds of up to 8,6 m/s *(1 700 ft/min)*

In other tests, it was found that continuous salt spray at 35 °C *(95 °F)* produced no trace of corrosion even after 600 hours. This optimized performance is made possible through the use of the new generation of SKF Speedi-Sleeve.

Diagram 1

SKF Speedi-Sleeve wear test
Abrasive media, test stopped at 500 hours

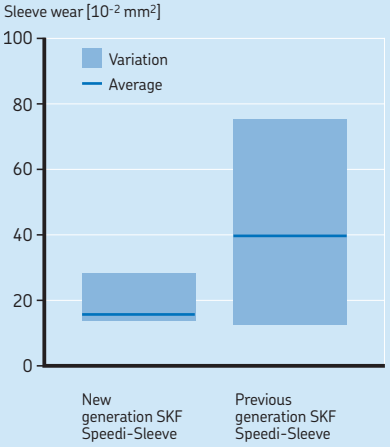

Diagram 2

Sealing lip wear test
Seals made from fluoro rubber, test stopped at 2 000 hours

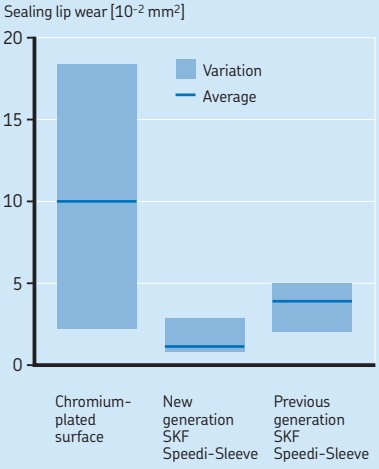

Selecting the right size

To determine the appropriate sleeve size, it is first necessary to clean the shaft carefully. The diameter of an undamaged section of the seal counterface should then be measured on at least three different planes. The arithmetical mean of these measurements determines the size of SKF Speedi-Sleeve. If the value lies within the permissible range listed in the product table for the shaft diameter d_1, SKF Speedi-Sleeve will have an adequate tight fit on the shaft and will not require an adhesive.

If no suitable size is listed in the product table, it will be necessary to rework the shaft to an appropriate dimension. This also means that a new seal size will be required. If production quantities are sufficient enough, SKF can provide specially dimensioned SKF Speedi-Sleeve or other wear sleeve solution.

Installing SKF Speedi-Sleeve

All SKF Speedi-Sleeve designs are installed the same way. Although installation is simple, it should be done carefully to achieve the best results. As the thin-walled sleeve has an interference fit, any disturbances on the shaft surface may create a similar pattern on the sleeve surface and cause the seal to leak. Therefore, the seal counterface surface of the shaft should be carefully cleaned and any burrs or rough spots filed down prior to installation. Deep wear grooves, scratches or very rough surfaces should be treated with a suitable powdered metal epoxy-type filler. The sleeve must be positioned on the shaft before the filler has hardened.

SKF Speedi-Sleeve must not be installed over keyways, cross holes, splines or threads since this will result in deformation of the sleeve, making it difficult for the seal to follow its new counterface surface as it rotates.

SKF Speedi-Sleeve should never be heated prior to installation. Using heat will cause the sleeve to expand, but when it cools, it may not contract back to its original size, resulting in a loose fit on the shaft.

See **fig. 5** for different SKF Speedi-Sleeve installations.

Fig. 5

SKF Speedi-Sleeve installations

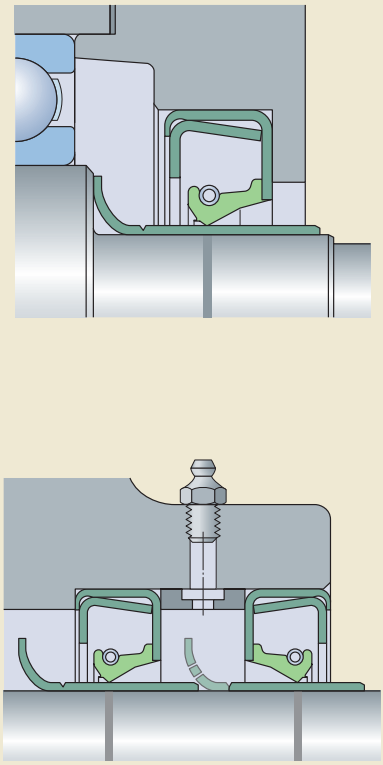

Fig. 6

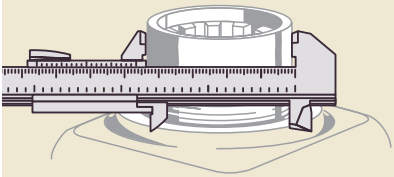

Fig. 7

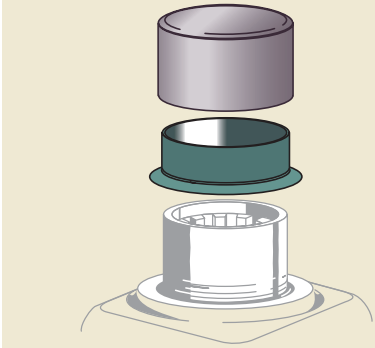

Fig. 8

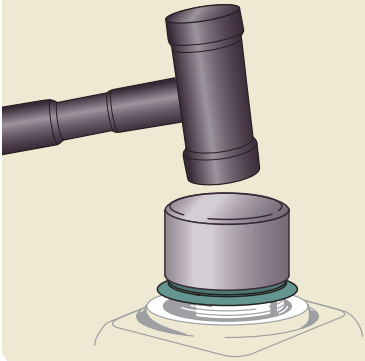

Installation procedure

1. Clean the seal counterface surface on the shaft. File down any burrs or rough spots and make sure that the sleeve will not be installed over keyways, cross holes, splines or similar.
2. Measure the diameter on an unworn portion of the shaft where the sleeve will be positioned (→ **fig. 6**). Measure in three positions and average the readings to make sure the shaft is within recommended specifications. If the average diameter is within the range for a given sleeve size, there is sufficient press fit built into the sleeve to prevent it from sliding or spinning without using an adhesive.
3. Determine where the sleeve must be positioned to cover the worn area. Measure to the exact point, or mark directly on the surface. The sleeve must be placed over the worn area, not just bottomed or left flush with the end of the shaft.
4. Shallow wear grooves do not require filling. Optionally, a light layer of a non-hardening sealant can be applied to the inside diameter surface of the sleeve. Clean away sealant that migrates to the shaft or sleeve outside diameter surface.
5. If the shaft is deeply scored, fill the groove with a powdered metal epoxy-type filler. Install the sleeve before the filler hardens, enabling the sleeve to wipe off any excess filler. Clean away any remaining filler from the sleeve outside diameter surface.
6. It should be repeated that heat should never be used to install SKF Speedi-Sleeve.
7. If the flange should be removed after installation, cut it from the outside diameter into the radius in one location. The flange end of the sleeve goes on the shaft first. Then, place the installation tool over the sleeve (→ **fig. 7**).
8. Gently tap the centre of the installation tool until the sleeve covers the worn shaft surface (→ **fig. 8**). If the installation tool is too short, a length of pipe or tubing with a squared-off, burr-free end can be used. Be sure that the inside diameter of the pipe is the same as that of the installation tool. Use care not to scratch the precision ground sleeve's outside diameter.

9 SKF Speedi-Sleeve should always be installed so that the outside edge of the sleeve is seated on the full shaft diameter. It must not rest in or outside the chamfer area since the sharp edge will likely cut the sealing lip during seal installation.
10 If the flange was cut for removal, use a pair of long-nosed pliers to grasp the flange away from the sleeve and twist it into a coil, being careful not to lift the end of the sleeve off the shaft or it will leave a jagged edge. Flange removal must be done with care to avoid damage to the outside diameter of the sleeve.
11 After the sleeve is installed, check again for burrs that could damage the seal.
12 Lubricate the sleeve with the system medium before installing the seal.
13 Proceed with seal installation.

Removing SKF Speedi-Sleeve

SKF Speedi-Sleeve can be removed by applying heat to the sleeve with an electric heat blower, which will expand it enough to let it slide off the shaft without causing any damage to the shaft.

Alternatively, the sleeve can be removed in any of the following ways, always using care not to damage the shaft surface:

- by relieving the press-fit tension using a small hammer to peen across the full width of the sleeve
- by using a cold chisel to cut through the sleeve
- by using a pair of wire cutters starting at or near the flange and applying a twisting motion

Please note that SKF Speedi-Sleeve cannot be reused.

SKF Speedi-Sleeve – metric dimensions (converted from inch dimensions)
d_1 **11,99 – 35,99** mm

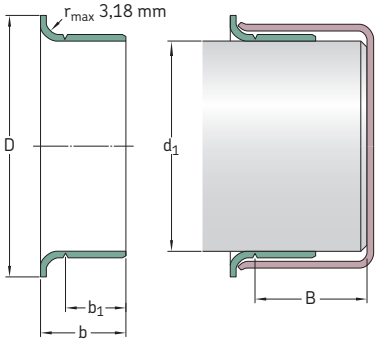

All sleeves listed in the product table can be manufactured as both standard and Gold version.

Shaft diameter range		**Nominal dimensions**					**Designation**
d_1 min	max	d_1	D ±1,6	b_1 ±0,8	b ±0,8	B[1]	
mm		mm					–
11,99	**12,07**	11,99	15,49	5,99	8,41	47,63	**99049**
12,65	**12,75**	12,70	15,49	6,35	8,74	50,80	**99050**
13,89	**14,00**	14,00	19,05	6,35	9,93	46,51	**99055**
14,22	**14,38**	14,30	19,05	6,35	9,93	46,51	**99056**
14,96	**15,06**	15,01	19,05	5,00	8,99	47,29	**99059**
15,82	**15,93**	15,88 15,88	19,05 19,05	7,95 7,95	10,31 10,31	50,80 50,80	**99810**[2] **99062**
15,90	**16,00**	16,00	18,24	7,95	11,13	50,80	**99058**
16,94	**17,04**	16,99	22,23	8,00	11,00	50,80	**99068**
17,32	**17,42**	17,37	22,86	7,95	11,13	50,80	**99060**
17,88	**18,01**	18,01	24,43	8,00	11,00	46,00	**99082**
19,00	**19,10**	19,05 19,05	24,00 24,00	7,95 7,95	11,13 11,13	50,80 50,80	**99811**[2] **99076**
19,28	**19,33**	19,30	23,83	7,95	11,13	50,80	**99081**
19,81	**19,91**	19,84	23,75	7,95	11,13	50,80	**99080**
19,94	**20,04**	19,99	23,62	8,00	11,00	50,80	**99078**
20,62	**20,70**	20,65	30,18	9,53	14,30	76,20	**99083**
21,77	**21,87**	21,82	29,34	6,35	9,53	50,80	**99086**
21,87	**22,00**	22,00 22,00	30,18 30,18	6,58 8,00	9,12 11,99	47,14 46,02	**99084** **99085**
22,17	**22,28**	22,23 22,23	27,79 27,79	7,95 7,95	11,13 11,13	50,80 50,80	**99812**[2] **99087**

[1] Possible max. distance of the rear groove from the shaft end when the installation tool supplied with the sleeve is used
[2] SKF Speedi-Sleeve Gold

Shaft diameter range		Nominal dimensions					Designation
d_1 min	max	d_1	D ±1,6	b_1 ±0,8	b ±0,8	B[1]	
mm		mm					–
23,06	**23,16**	23,11	30,94	7,95	11,13	46,91	**99860**[2]
		23,11	30,94	7,95	11,13	46,91	**99091**
23,88	**24,00**	24,00	28,70	7,95	11,13	50,80	**99092**
24,54	**24,64**	24,61	28,70	7,95	11,13	50,80	**99094**
		24,61	28,70	15,88	18,26	50,80	**99096**
24,94	**25,04**	24,99	33,02	7,95	11,00	50,80	**99813**[2]
		24,99	33,02	7,95	11,00	50,80	**99098**
25,35	**25,45**	25,40	30,96	7,95	11,13	50,80	**99814**[2]
		25,40	30,96	7,95	11,13	50,80	**99868**
25,88	**26,01**	26,01	33,35	8,00	11,99	46,05	**99103**
26,92	**27,03**	27,00	33,53	7,95	11,13	46,81	**99815**[2]
		27,00	33,53	7,95	11,13	46,81	**99106**
27,61	**27,71**	27,66	35,71	7,95	11,13	15,88	**99108**
27,94	**28,04**	27,99	34,93	9,53	12,70	46,81	**99866**[3]
		27,99	34,93	9,53	12,70	46,81	**99111**
28,52	**28,63**	28,58	38,10	7,95	11,13	17,48	**99816**[2]
		28,58	38,10	7,95	11,13	17,48	**99112**
		28,58	38,10	9,53	12,70	17,48	**99116**
29,31	**29,41**	29,36	34,29	9,53	12,70	17,48	**99865**[3]
		29,36	34,29	9,53	12,70	17,48	**99120**
29,79	**29,92**	29,85	35,56	7,95	11,13	17,48	**99122**
29,95	**30,07**	30,00	35,56	8,00	11,00	17,48	**99114**
30,10	**30,23**	30,18	35,56	7,95	11,13	17,48	**99118**
30,89	**31,04**	30,96	39,70	7,95	11,00	15,88	**99123**
31,42	**31,57**	31,50	39,12	8,00	11,13	17,48	**99141**
31,67	**31,83**	31,75	38,10	7,95	11,13	17,48	**99817**[2]
		31,75	38,10	7,95	11,13	17,48	**99125**
31,93	**32,08**	32,00	38,10	8,00	11,13	17,48	**99128**
32,94	**33,05**	32,99	40,49	15,01	18,01	25,40	**99121**
33,22	**33,38**	33,35	40,64	6,35	9,53	20,65	**99129**
33,27	**33,43**	33,35	40,49	12,70	15,88	20,65	**99818**[2]
		33,35	40,49	12,70	15,88	20,65	**99131**
33,86	**34,01**	34,01	41,28	12,70	15,88	20,65	**99134**
34,82	**34,98**	34,93	41,61	7,95	11,13	20,65	**99133**
		34,93	41,61	12,70	15,88	20,65	**99819**[2]
		34,93	41,61	12,70	15,88	20,65	**99138**
34,93	**35,08**	34,93	41,61	13,00	16,00	20,65	**99820**[2]
		34,93	41,61	13,00	16,00	20,65	**99139**
35,84	**35,99**	35,99	45,24	13,00	16,99	24,99	**99146**

[1] Possible max. distance of the rear groove from the shaft end when the installation tool supplied with the sleeve is used
[2] SKF Speedi-Sleeve Gold

SKF Speedi-Sleeve – metric dimensions (converted from inch dimensions)
d_1 **36,37 – 54,10** mm

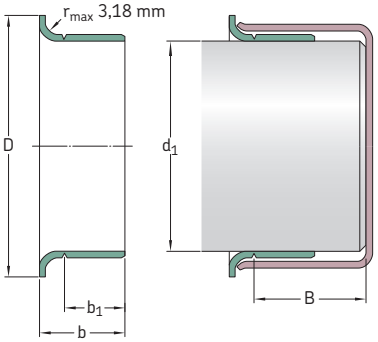

All sleeves listed in the product table can be manufactured as both standard and Gold version.

Shaft diameter range		**Nominal dimensions**					**Designation**
d_1 min	max	d_1	D ±1,6	b_1 ±0,8	b ±0,8	B[1]	
mm		mm					–
36,37	**36,53**	36,53	45,24	14,30	17,48	25,81	**99821**[2]
		36,53	45,24	14,30	17,48	25,81	**99143**
36,45	**36,60**	36,53	45,24	9,53	12,70	25,81	**99144**
37,85	**38,00**	38,00	45,24	13,00	16,99	24,99	**99147**
38,02	**38,18**	38,10	45,24	9,53	12,70	25,81	**99823**[2]
		38,10	45,24	9,53	12,70	25,81	**99150**
		38,10	45,24	14,30	17,48	25,81	**99822**[2]
		38,10	45,24	14,30	17,48	25,81	**99149**
38,61	**38,76**	38,68	47,22	11,13	14,30	25,81	**99152**
39,34	**39,50**	39,42	47,22	11,13	14,30	25,81	**99155**
39,60	**39,75**	39,67	47,22	14,30	17,48	25,81	**99824**[2]
		39,67	47,22	14,30	17,48	25,81	**99156**
39,78	**39,93**	39,85	47,22	15,88	19,05	25,81	**99159**
39,85	**40,01**	40,01	46,99	9,91	12,93	25,40	**99153**
39,93	**40,08**	40,08	46,99	13,00	16,00	25,98	**99825**[2]
		40,08	46,99	13,00	16,00	25,98	**99157**
40,69	**40,84**	40,77	49,23	12,70	16,28	25,40	**99160**
40,84	**41,00**	41,00	49,23	12,70	15,88	25,81	**99163**
41,20	**41,35**	41,28	47,63	7,95	11,13	25,81	**99161**
		41,28	47,63	14,30	17,48	20,65	**99826**[2]
		41,28	47,63	14,30	17,48	20,65	**99162**
41,83	**42,01**	41,91	53,01	11,30	14,50	21,49	**99166**
		41,91	53,01	14,30	17,50	21,01	**99169**
		42,01	53,01	14,30	17,50	21,01	**99873**[2]

[1] Possible max. distance of the rear groove from the shaft end when the installation tool supplied with the sleeve is used
[2] SKF Speedi-Sleeve Gold

Shaft diameter range		Nominal dimensions					Designation
d_1 min	max	d_1	D ±1,6	b_1 ±0,8	b ±0,8	B[1]	
mm		mm					–
41,99	**42,14**	42,06	53,01	13,97	17,50	21,01	**99165**
42,77	**42,93**	42,88	48,41	14,30	17,48	22,23	**99168**
42,80	**42,95**	42,88	48,41	7,95	11,13	22,23	**99167**
42,85	**43,00**	43,00	48,41	12,70	15,88	21,44	**99182**
43,56	**43,71**	43,66	51,59	14,30	17,48	20,65	**99171**
44,09	**44,25**	44,17	52,40	9,53	12,70	20,65	**99170**
44,37	**44,53**	44,45	52,20	9,53	12,70	20,65	**99172**
		44,45	52,40	13,49	15,88	22,30	**99180**
		44,45	52,40	14,30	17,48	20,65	**99827**[2]
		44,45	52,40	14,30	17,48	20,65	**99174**
		44,45	52,40	19,05	22,23	20,65	**99828**[2]
		44,45	52,40	19,05	22,23	20,65	**99175**
44,73	**44,88**	44,86	52,40	14,30	17,48	20,65	**99829**[2]
		44,86	52,40	14,30	17,48	20,65	**99176**
44,93	**45,09**	45,01	53,01	14,00	16,99	20,62	**99830**[2]
		45,01	53,01	14,00	16,99	20,62	**99177**
45,16	**45,31**	45,24	53,98	16,94	20,32	26,97	**99179**
45,95	**46,10**	46,05	53,09	14,30	17,48	25,40	**99831**[2]
		46,05	53,09	14,30	17,48	25,40	**99181**
47,17	**47,32**	47,22	54,76	14,30	17,48	25,40	**99185**
47,40	**47,55**	47,45	55,58	22,58	26,04	25,40	**99186**
47,55	**47,70**	47,63	55,96	4,45	7,49	18,90	**99190**
		47,63	55,96	7,49	10,54	18,90	**99188**
		47,63	55,96	9,53	13,11	26,67	**99184**
		47,63	55,96	14,30	17,48	25,40	**99832**[2]
		47,63	55,96	14,30	17,48	25,40	**99187**
47,93	**48,08**	48,03	56,01	14,00	16,97	24,99	**99189**
48,49	**48,64**	48,56	56,36	9,53	12,70	25,40	**99192**
49,12	**49,28**	49,23	56,36	14,30	17,48	25,40	**99833**[2]
		49,23	56,36	14,30	17,48	25,40	**99193**
49,91	**50,06**	50,01	56,49	14,00	16,97	34,29	**99052**
		50,01	57,00	14,00	16,97	24,99	**99196**
50,22	**50,37**	50,29	58,75	14,30	17,88	26,67	**99198**
50,72	**50,88**	50,80	61,11	14,30	17,48	25,55	**99834**[2]
		50,80	61,11	14,30	17,48	25,40	**99199**
		50,80	61,11	22,23	25,40	25,40	**99835**[2]
		50,80	61,11	22,23	25,40	25,40	**99200**
51,82	**51,99**	51,99	62,71	12,70	15,88	34,52	**99878**
52,25	**52,40**	52,40	62,71	19,84	23,83	34,93	**99205**
53,92	**54,05**	53,98	61,52	12,70	19,05	32,54	**99210**
53,95	**54,10**	53,98	61,52	19,84	23,83	34,93	**99836**[2]
		53,98	61,52	19,84	23,83	34,93	**99212**

[1] Possible max. distance of the rear groove from the shaft end when the installation tool supplied with the sleeve is used
[2] SKF Speedi-Sleeve Gold

SKF Speedi-Sleeve – metric dimensions (converted from inch dimensions)
d_1 **54,91 – 74,75** mm

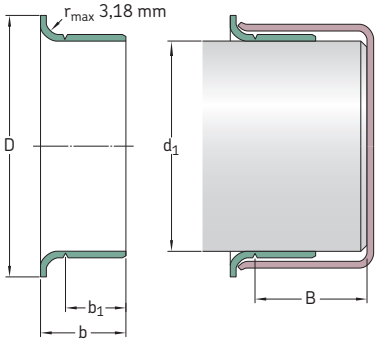

All sleeves listed in the product table can be manufactured as both standard and Gold version.

Shaft diameter range		**Nominal dimensions**					**Designation**
d_1 min	max	d_1	D ±1,6	b_1 ±0,8	b ±0,8	B[1]	
mm		mm					–
54,91	**55,07**	54,99	62,00	19,99	22,99	31,75	**99863**[2]
		54,99	62,00	19,99	22,99	31,75	**99215**
55,52	**55,68**	55,58	63,50	19,84	23,83	33,35	**99218**
55,83	**56,01**	56,01	64,29	12,70	15,88	33,35	**99220**
		56,01	64,29	19,79	23,77	80,01	**99224**
56,57	**56,72**	56,64	64,29	12,70	15,88	33,35	**99861**[2]
		56,64	64,29	12,70	15,88	33,35	**99229**
		56,64	64,29	19,84	23,01	31,75	**99230**
56,82	**56,97**	56,90	65,10	19,41	22,86	31,75	**99226**
57,12	**57,28**	57,15	64,29	7,95	11,13	33,35	**99838**[2]
		57,15	64,29	7,95	11,13	33,35	**99227**
		57,15	64,29	19,84	23,83	33,35	**99837**[2]
		57,15	64,29	19,84	23,83	33,35	**99225**
57,91	**58,06**	57,99	65,99	19,99	23,83	34,93	**99219**
58,65	**58,80**	58,75	68,28	19,84	23,83	34,93	**99231**
59,11	**59,26**	59,13	69,85	19,05	22,23	38,10	**99233**
59,92	**60,07**	59,99	70,74	9,40	11,43	37,36	**99241**
		59,99	70,74	19,99	22,99	34,93	**99869**[2]
		59,99	70,74	19,99	22,99	34,93	**99235**
60,25	**60,40**	60,33	69,85	15,09	19,05	34,93	**99238**
60,30	**60,45**	60,33	69,85	13,36	17,35	34,93	**99240**
		60,33	69,85	19,84	23,83	34,93	**99839**[2]
		60,33	69,85	19,84	23,83	34,93	**99237**
61,82	**62,00**	61,93	71,83	19,84	23,83	35,38	**99243**
		62,00	71,83	12,70	15,88	36,20	**99244**

[1] Possible max. distance of the rear groove from the shaft end when the installation tool supplied with the sleeve is used
[2] SKF Speedi-Sleeve Gold

Shaft diameter range		Nominal dimensions					Designation
d_1 min	max	d_1	D ±1,6	b_1 ±0,8	b ±0,8	B[1]	
mm		mm					–
61,85	**62,00**	61,93	71,83	12,70	15,88	36,20	**99242**
63,22	**63,37**	63,30	73,03	19,84	23,83	35,38	**99249**
63,42	**63,58**	63,50	71,63	14,10	16,51	22,61	**99253**
63,50	**63,65**	63,50	71,83	12,70	16,66	35,38	**99248**
		63,50	71,63	19,84	23,83	34,93	**99840**[2]
		63,50	71,63	19,84	23,83	34,93	**99250**
63,75	**63,91**	63,91	71,83	19,84	23,01	36,53	**99251**
64,92	**65,07**	65,00	72,39	19,99	22,99	34,93	**99841**[2]
		65,00	72,39	19,99	22,99	34,93	**99254**
65,02	**65,18**	65,10	73,43	19,84	23,83	34,93	**99256**
65,91	**66,07**	65,99	75,95	19,84	23,83	31,75	**99259**
66,50	**66,65**	66,57	77,39	19,84	23,83	34,93	**99261**
66,57	**66,73**	66,68	77,39	19,84	23,01	34,93	**99264**
66,60	**66,75**	66,68	77,39	12,70	15,88	34,93	**99260**
66,68	**66,83**	66,68	77,39	19,84	23,83	34,93	**99842**[2]
		66,68	77,39	19,84	23,83	34,93	**99262**
67,82	**68,00**	68,00	79,38	19,05	22,23	42,88	**99266**
69,27	**69,42**	69,34	79,38	19,84	23,01	33,35	**99268**
69,60	**69,75**	69,67	77,85	19,84	23,83	31,75	**99273**
69,72	**69,88**	69,85	79,38	19,84	23,83	31,75	**99843**[2]
		69,85	79,38	19,84	23,83	31,75	**99274**
69,77	**69,93**	69,85	78,11	36,53	41,28	41,28	**99267**
69,85	**70,00**	69,85	79,38	10,31	14,30	31,75	**99272**
		69,85	79,38	19,84	23,83	31,75	**99844**[2]
		69,85	79,38	19,84	23,83	31,75	**99275**
		69,85	79,38	28,58	31,75	33,32	**99269**
69,93	**70,08**	70,00	79,38	19,99	24,00	31,75	**99276**
71,35	**71,50**	71,45	80,98	15,09	17,48	31,75	**99281**
71,83	**72,01**	72,01	81,92	19,05	22,23	34,11	**99870**[2]
		72,01	81,92	19,05	22,23	34,11	**99284**
72,09	**72,24**	72,09	81,92	12,70	16,66	31,75	**99845**[2]
		72,09	81,92	12,70	16,66	31,75	**99282**
72,80	**72,95**	72,87	80,98	19,84	23,83	31,75	**99286**
72,97	**73,13**	73,03	81,76	19,84	23,83	31,75	**99846**[2]
		73,03	81,76	19,84	23,83	31,75	**99287**
74,60	**74,75**	74,63	84,94	12,70	16,28	33,81	**99290**
		74,63	84,94	19,84	23,83	33,35	**99847**[2]
		74,68	84,94	19,84	23,83	33,35	**99293**

[1] Possible max. distance of the rear groove from the shaft end when the installation tool supplied with the sleeve is used
[2] SKF Speedi-Sleeve Gold

SKF Speedi-Sleeve – metric dimensions (converted from inch dimensions)
d_1 **74,93 – 98,53** mm

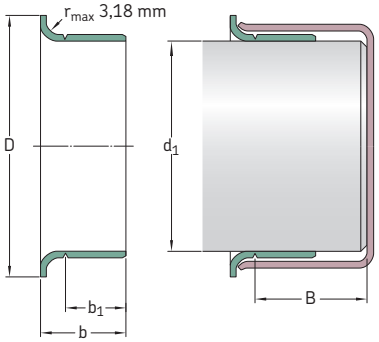

All sleeves listed in the product table can be manufactured as both standard and Gold version.

Shaft diameter range		**Nominal dimensions**					**Designation**
d_1 min	max	d_1	D ±1,6	b_1 ±0,8	b ±0,8	B[1]	
mm		mm					–
74,93	**75,08**	75,01	83,13	15,09	17,53	27,51	**99289**
		75,01	83,95	22,00	26,01	33,35	**99875**[2]
		75,01	83,95	22,00	26,01	33,35	**99294**
75,49	**75,59**	75,54	82,17	20,65	25,40	31,75	**99292**
75,95	**76,10**	76,02	85,32	12,29	15,88	33,81	**99291**
		76,02	85,32	14,30	17,48	34,93	**99298**
		76,02	85,09	20,65	25,40	32,54	**99299**
76,12	**76,28**	76,20	82,30	20,65	23,83	34,93	**99296**
76,20	**76,35**	76,20	84,96	15,88	20,65	32,51	**99048**
		76,20	82,17	20,65	25,40	32,54	**99848**[2]
		76,20	82,17	20,65	25,40	32,54	**99300**
76,40	**76,56**	76,48	85,22	12,70	15,88	50,80	**99301**
77,83	**78,00**	78,00	88,09	19,05	22,23	52,22	**99306**
79,25	**79,40**	79,38	89,69	17,48	20,65	50,80	**99311**
		79,38	89,69	20,65	25,40	50,80	**99849**[2]
		79,38	89,69	20,65	25,40	50,80	**99312**
79,35	**79,55**	79,38	89,54	14,00	18,01	51,59	**99053**
79,81	**80,01**	80,01	89,92	19,05	22,50	34,93	**99313**
79,91	**80,09**	80,01	89,99	11,00	15,01	34,93	**99317**
		80,01	89,99	21,01	24,00	34,93	**99315**
81,92	**82,07**	81,99	91,06	16,76	21,54	44,45	**99328**
82,47	**82,63**	82,55	91,29	20,65	25,40	34,93	**99322**

[1] Possible max. distance of the rear groove from the shaft end when the installation tool supplied with the sleeve is used
[2] SKF Speedi-Sleeve Gold

Shaft diameter range		Nominal dimensions					Designation
d_1 min	max	d_1	D ±1,6	b_1 ±0,8	b ±0,8	B[1]	
mm		mm					–
82,55	**82,70**	82,55	90,81	15,11	18,26	34,93	**99850**[2]
		82,55	90,81	15,11	18,26	34,93	**99324**
		82,55	91,06	17,48	22,23	31,75	**99326**
		82,55	91,06	20,65	25,40	34,93	**99851**[2]
		82,55	91,06	20,65	25,40	34,93	**99325**
84,00	**84,15**	84,07	93,68	20,65	25,40	34,93	**99331**
84,76	**85,01**	84,89	93,98	16,99	21,01	35,00	**99332**
		84,89	93,98	21,01	24,99	35,00	**99872**[2]
		84,89	93,98	21,01	24,99	35,00	**99333**
84,79	**85,01**	85,01	90,93	10,13	12,67	36,35	**99334**
85,67	**85,83**	85,73	93,68	9,53	12,70	35,81	**99338**
		85,73	93,85	20,65	25,40	34,93	**99337**
87,25	**87,40**	87,33	97,64	19,84	23,01	35,71	**99339**
87,80	**88,00**	88,00	95,28	29,21	34,27	42,50	**99481**
88,32	**88,47**	88,39	97,41	19,84	23,01	35,71	**99340**
88,82	**88,98**	88,90	97,64	15,88	20,65	34,21	**99346**
88,90	**89,05**	88,90	97,16	7,95	12,70	34,21	**99347**
		88,90	97,64	20,65	25,40	34,21	**99852**[2]
		88,90	97,64	20,65	25,40	34,21	**99350**
88,93	**89,08**	89,00	97,64	15,88	20,65	34,24	**99349**
89,92	**90,07**	89,99	101,60	11,13	13,67	46,05	**99352**
		89,99	101,60	13,36	16,94	44,45	**99353**
		89,99	101,60	18,03	23,01	46,05	**99351**
		89,99	101,60	23,01	27,99	44,45	**99354**
90,42	**90,58**	90,50	99,06	20,65	25,40	44,45	**99356**
91,90	**92,05**	91,97	102,39	20,65	25,40	44,45	**99360**
92,02	**92,18**	92,08	102,24	12,70	15,88	44,45	**99363**
		92,08	102,39	20,65	25,40	44,45	**99362**
93,57	**93,73**	93,68	102,39	7,95	11,13	22,23	**99368**
93,60	**93,75**	93,68	102,24	20,65	23,83	45,72	**99365**
94,67	**94,82**	94,74	102,01	11,91	15,09	45,72	**99359**
		94,74	102,24	19,84	23,01	45,72	**99366**
94,92	**95,07**	95,00	102,24	21,01	24,00	45,72	**99369**
95,00	**95,15**	95,07	102,39	8,74	12,70	45,72	**99374**
		95,07	102,49	11,91	15,09	45,72	**99364**
95,15	**95,30**	95,22	102,24	14,30	17,48	45,72	**99376**
95,25	**95,40**	95,25	102,11	17,48	22,23	45,72	**99853**[2]
		95,33	102,24	8,74	12,70	45,72	**99367**
		95,33	102,11	17,48	22,23	45,72	**99372**
98,25	**98,40**	98,32	106,30	20,65	25,40	47,63	**99386**
98,37	**98,53**	98,43	107,16	20,65	25,40	47,63	**99387**

[1] Possible max. distance of the rear groove from the shaft end when the installation tool supplied with the sleeve is used
[2] SKF Speedi-Sleeve Gold

SKF Speedi-Sleeve – metric dimensions (converted from inch dimensions)
d_1 **99,95 – 152,48** mm

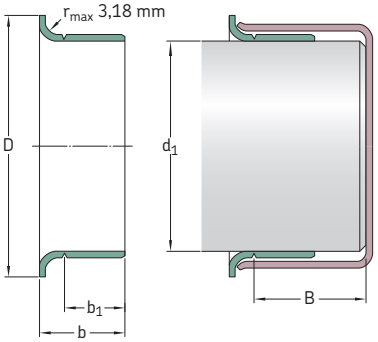

All sleeves listed in the product table can be manufactured as both standard and Gold version.

Shaft diameter range		**Nominal dimensions**					**Designation**
d_1 min	max	d_1	D ±1,6	b_1 ±0,8	b ±0,8	B[1]	
mm		mm					–
99,95	**100,10**	100,03	109,55	20,65	25,40	52,07	**99854**[2]
		100,03	109,55	20,65	25,40	52,07	**99393**
101,55	**101,75**	101,60	111,13	12,70	15,88	52,48	**99401**
		101,60	111,13	15,24	18,42	52,07	**99395**
		101,60	111,13	16,51	19,69	34,93	**99400**
		101,60	111,13	20,65	25,40	52,07	**99855**[2]
		101,60	111,13	20,65	25,40	52,07	**99399**
103,89	**104,09**	103,99	112,73	19,99	24,00	35,99	**99409**
104,70	**104,90**	104,78	113,54	20,65	25,40	34,93	**99412**
104,90	**105,11**	105,00	113,54	19,99	23,19	35,00	**99413**
106,25	**106,45**	106,38	114,30	20,65	25,40	34,93	**99418**
107,34	**107,54**	107,54	117,09	19,84	23,01	36,53	**99423**
107,90	**108,10**	107,95	117,09	20,65	25,40	36,53	**99424**
109,78	**110,01**	110,01	124,99	11,38	14,96	32,94	**99434**
109,91	**110,11**	109,93	124,99	12,93	16,51	31,75	**99435**
111,00	**111,20**	111,13	120,65	20,65	25,40	41,91	**99437**
111,79	**111,99**	111,99	120,65	19,05	22,50	33,02	**99438**
112,62	**112,83**	112,73	122,25	25,40	29,01	33,35	**99439**
114,20	**114,40**	114,30	123,19	20,65	25,40	31,75	**99856**[2]
		114,30	124,46	20,65	25,40	31,75	**99450**
114,88	**115,09**	115,01	127,00	20,65	23,83	31,75	**99452**
117,37	**117,58**	117,48	127,00	11,13	15,88	34,93	**99465**
		117,48	128,60	25,40	31,75	34,93	**99463**

[1] Possible max. distance of the rear groove from the shaft end when the installation tool supplied with the sleeve is used
[2] SKF Speedi-Sleeve Gold

Shaft diameter range		Nominal dimensions					Designation
d_1 min	max	d_1	D ±1,6	b_1 ±0,8	b ±0,8	B[1]	
mm		mm					–
119,00	**119,20**	119,08	128,60	20,65	25,40	34,93	**99468**
119,89	**120,09**	119,99	129,79	8,00	11,00	33,60	**99471**
		119,99	129,79	19,99	24,99	32,00	**99473**
120,55	**120,75**	120,65	127,00	12,70	19,05	38,10	**99475**
121,89	**122,10**	122,00	131,50	19,99	24,00	32,00	**99472**
122,91	**123,11**	123,01	132,82	19,99	24,99	31,60	**99484**
123,72	**123,93**	123,83	133,35	15,88	19,05	36,53	**99487**
124,89	**125,10**	124,99	137,16	10,01	14,00	36,53	**99490**
		124,99	137,16	26,01	32,00	36,53	**99492**
126,95	**127,15**	127,00	137,16	13,72	17,30	36,53	**99501**
		127,00	137,16	17,48	22,23	36,53	**99857**[2]
		127,00	137,16	17,48	22,23	36,53	**99498**
		127,00	136,91	20,65	25,40	36,53	**99858**[2]
		127,00	136,91	20,65	25,40	36,53	**99499**
127,80	**128,00**	128,00	135,26	29,21	34,27	40,30	**99482**
129,79	**130,00**	129,90	139,52	19,05	23,83	30,00	**99494**
129,97	**130,18**	130,00	139,52	22,00	25,30	32,51	**99874**[2]
		130,18	139,52	22,00	25,30	32,51	**99491**
130,05	**130,25**	130,18	139,70	20,65	25,40	31,75	**99513**
133,25	**133,45**	133,35	141,22	20,65	25,40	31,75	**99525**
134,80	**135,00**	134,90	145,67	20,50	25,40	31,75	**99533**
136,42	**136,63**	136,53	149,23	20,65	25,40	31,75	**99537**
138,02	**138,23**	138,13	146,05	38,10	42,88	47,63	**99548**
138,99	**139,19**	139,09	149,86	14,30	19,05	31,34	**99547**
139,65	**139,85**	139,70	150,83	13,16	17,91	31,75	**99550**
		139,70	150,83	20,65	25,40	31,75	**99859**[2]
		139,70	150,83	20,65	25,40	31,75	**99549**
139,90	**140,11**	140,00	151,00	20,50	25,40	31,75	**99552**
142,77	**142,98**	142,88	157,18	22,23	25,40	46,02	**99560**
144,75	**145,01**	145,01	154,94	19,05	22,23	46,02	**99571**
145,44	**145,64**	145,64	154,94	14,30	19,05	49,23	**99562**
145,95	**146,15**	146,05	156,97	20,65	25,40	44,45	**99575**
149,12	**149,33**	149,23	157,18	25,40	31,75	33,35	**99862**[2]
		149,23	157,18	25,40	31,75	33,35	**99587**
149,76	**150,01**	149,99	159,00	26,01	30,00	32,51	**99595**
150,72	**150,93**	150,83	161,93	25,40	28,58	47,63	**99596**
152,27	**152,48**	152,40	161,54	12,70	19,05	44,45	**99601**
		152,40	161,93	25,40	31,75	44,45	**99599**

[1] Possible max. distance of the rear groove from the shaft end when the installation tool supplied with the sleeve is used
[2] SKF Speedi-Sleeve Gold

SKF Speedi-Sleeve – metric dimensions (converted from inch dimensions)
d_1 **153,87 – 203,33** mm

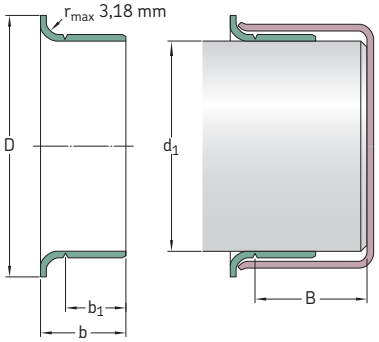

All sleeves listed in the product table can be manufactured as both standard and Gold version.

Shaft diameter range		**Nominal dimensions**					**Designation**
d_1 min	max	d_1	D ±1,6	b_1 ±0,8	b ±0,8	B[1]	
mm		mm					–
153,87	**154,13**	154,00	161,93	26,01	30,00	32,99	**99605**
154,74	**154,99**	154,86	167,01	26,01	30,00	32,99	**99606**
157,43	**157,68**	157,56	168,28	20,65	27,00	44,45	**99620**
158,62	**158,88**	158,75	168,28	26,19	31,75	44,45	**99625**
159,74	**159,99**	159,99	171,45	25,40	31,75	34,93	**99630**
164,97	**165,23**	165,10	177,80	25,40	31,75	34,93	**99650**
169,75	**170,00**	169,88	182,58	31,75	38,00	44,45	**99640**
171,32	**171,58**	171,45	180,98	20,65	27,00	44,45	**99675**
174,75	**175,01**	175,01	186,99	27,99	32,00	35,00	**99687**
177,67	**177,93**	177,80 177,80	189,87 189,87	25,40 25,40	31,75 31,75	42,88 42,88	**99864**[2] **99700**
179,76	**180,01**	180,01	190,50	32,99	38,00	44,50	**99721**
184,00	**184,25**	184,15	197,10	31,75	38,10	55,25	**99725**
184,73	**184,99**	184,86	197,10	32,00	38,00	54,99	**99726**
189,08	**189,33**	189,31	199,64	20,65	25,40	31,75	**99745**
190,37	**190,63**	190,50	200,03	20,65	25,40	31,75	**99750**
196,72	**196,98**	196,85	210,06	25,40	33,35	47,63	**99775**
199,87	**200,13**	200,03	212,73	34,52	38,10	44,45	**99787**
201,50	**201,75**	201,63	212,73	25,40	31,75	44,45	**99799**
203,07	**203,33**	203,20	212,73	25,40	31,75	44,45	**99800**

[1] Possible max. distance of the rear groove from the shaft end when the installation tool supplied with the sleeve is used
[2] SKF Speedi-Sleeve Gold

SKF Speedi-Sleeve – inch dimensions
d_1 **0.472 – 0.877** in.

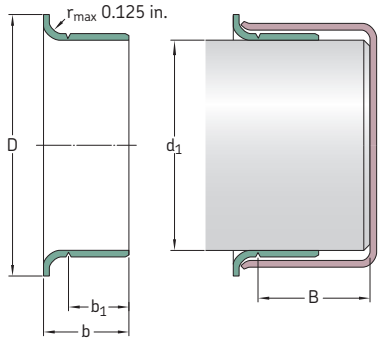

All sleeves listed in the product table can be manufactured as both standard and Gold version.

Shaft diameter range		Nominal dimensions					Designation
d_1 min	max	d_1	D ±0.063	b_1 ±0.031	b ±0.031	B[1]	
in.		in.					–
0.472	**0.475**	0.472	0.610	0.236	0.331	1.875	**99049**
0.498	**0.502**	0.500	0.610	0.250	0.344	2.000	**99050**
0.547	**0.551**	0.551	0.750	0.250	0.391	1.831	**99055**
0.560	**0.566**	0.563	0.750	0.250	0.391	1.831	**99056**
0.589	**0.593**	0.591	0.750	0.197	0.354	1.862	**99059**
0.623	**0.627**	0.625 0.625	0.750 0.750	0.313 0.313	0.406 0.406	2.000 2.000	**99810**[2] **99062**
0.626	**0.630**	0.630	0.718	0.313	0.438	2.000	**99058**
0.667	**0.671**	0.669	0.875	0.315	0.433	2.000	**99068**
0.682	**0.686**	0.684	0.900	0.313	0.438	2.000	**99060**
0.704	**0.709**	0.709	0.962	0.315	0.433	1.811	**99082**
0.748	**0.752**	0.750 0.750	0.945 0.945	0.313 0.313	0.438 0.438	2.000 2.000	**99811**[2] **99076**
0.759	**0.761**	0.760	0.938	0.313	0.438	2.000	**99081**
0.780	**0.784**	0.781	0.935	0.313	0.438	2.000	**99080**
0.785	**0.789**	0.787	0.930	0.315	0.433	2.000	**99078**
0.812	**0.815**	0.813	1.188	0.375	0.563	3.000	**99083**
0.857	**0.861**	0.859	1.155	0.250	0.375	2.000	**99086**
0.861	**0.866**	0.866 0.866	1.188 1.188	0.259 0.315	0.359 0.472	1.856 1.812	**99084** **99085**
0.873	**0.877**	0.875 0.875	1.094 1.094	0.313 0.313	0.438 0.438	2.000 2.000	**99812**[2] **99087**

[1] Possible max. distance of the rear groove from the shaft end when the installation tool supplied with the sleeve is used
[2] SKF Speedi-Sleeve Gold

SKF Speedi-Sleeve – inch dimensions
d_1 **0.908 – 1.659** in.

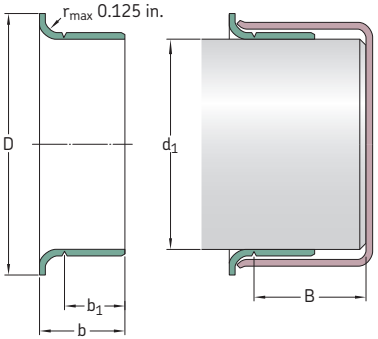

All sleeves listed in the product table can be manufactured as both standard and Gold version.

Shaft diameter range		Nominal dimensions					Designation
d_1 min	max	d_1	D ±0.063	b_1 ±0.031	b ±0.031	B[1]	
in.		in.					–
0.908	**0.912**	0.910	1.218	0.313	0.438	1.847	**99860**[2]
		0.910	1.218	0.313	0.438	1.847	**99091**
0.940	**0.945**	0.945	1.130	0.313	0.438	2.000	**99092**
0.966	**0.970**	0.969	1.130	0.313	0.438	2.000	**99094**
		0.969	1.130	0.625	0.719	2.000	**99096**
0.982	**0.986**	0.984	1.300	0.313	0.433	2.000	**99813**[2]
		0.984	1.300	0.313	0.433	2.000	**99098**
0.998	**1.002**	1.000	1.219	0.313	0.438	2.000	**99814**[2]
		1.000	1.219	0.313	0.438	2.000	**99868**
1.019	**1.024**	1.024	1.313	0.315	0.472	1.813	**99103**
1.060	**1.064**	1.063	1.320	0.313	0.438	1.843	**99815**[2]
		1.063	1.320	0.313	0.438	1.843	**99106**
1.087	**1.091**	1.089	1.406	0.313	0.438	0.625	**99108**
1.100	**1.104**	1.102	1.375	0.375	0.500	1.843	**99866**[2]
		1.102	1.375	0.375	0.500	1.843	**99111**
1.123	**1.127**	1.125	1.500	0.313	0.438	0.688	**99816**[2]
		1.125	1.500	0.313	0.438	0.688	**99112**
		1.125	1.500	0.375	0.500	0.688	**99116**
1.154	**1.158**	1.156	1.350	0.375	0.500	0.688	**99865**[2]
		1.156	1.350	0.375	0.500	0.688	**99120**
1.173	**1.178**	1.175	1.400	0.313	0.438	0.688	**99122**
1.179	**1.184**	1.181	1.400	0.315	0.433	0.688	**99114**
1.185	**1.190**	1.188	1.400	0.313	0.438	0.688	**99118**
1.216	**1.222**	1.219	1.563	0.313	0.433	0.625	**99123**

[1] Possible max. distance of the rear groove from the shaft end when the installation tool supplied with the sleeve is used
[2] SKF Speedi-Sleeve Gold

Shaft diameter range		Nominal dimensions					Designation
d_1 min	max	d_1	D ±0.063	b_1 ±0.031	b ±0.031	B[1]	
in.		in.					–
1.237	**1.243**	1.240	1.540	0.315	0.438	0.688	**99141**
1.247	**1.253**	1.250	1.500	0.313	0.438	0.688	**99817**[2]
		1.250	1.500	0.313	0.438	0.688	**99125**
1.257	**1.263**	1.260	1.500	0.315	0.438	0.688	**99128**
1.297	**1.301**	1.299	1.594	0.591	0.709	1.000	**99121**
1.308	**1.314**	1.313	1.600	0.250	0.375	0.813	**99129**
1.310	**1.316**	1.313	1.594	0.500	0.625	0.813	**99818**[2]
		1.313	1.594	0.500	0.625	0.813	**99131**
1.333	**1.339**	1.339	1.625	0.500	0.625	0.813	**99134**
1.371	**1.377**	1.375	1.638	0.313	0.438	0.813	**99133**
		1.375	1.638	0.500	0.625	0.813	**99819**[2]
		1.375	1.638	0.500	0.625	0.813	**99138**
1.375	**1.381**	1.375	1.638	0.512	0.630	0.813	**99820**[2]
		1.375	1.638	0.512	0.630	0.813	**99139**
1.411	**1.417**	1.417	1.781	0.512	0.669	0.984	**99146**
1.432	**1.438**	1.438	1.781	0.563	0.688	1.016	**99821**[2]
		1.438	1.781	0.563	0.688	1.016	**99143**
1.435	**1.441**	1.438	1.781	0.375	0.500	1.016	**99144**
1.490	**1.496**	1.496	1.781	0.512	0.669	0.984	**99147**
1.497	**1.503**	1.500	1.781	0.375	0.500	1.016	**99823**[2]
		1.500	1.781	0.375	0.500	1.016	**99150**
		1.500	1.781	0.563	0.688	1.016	**99822**[2]
		1.500	1.781	0.563	0.688	1.016	**99149**
1.520	**1.526**	1.523	1.859	0.438	0.563	1.016	**99152**
1.549	**1.555**	1.552	1.859	0.438	0.563	1.016	**99155**
1.559	**1.565**	1.562	1.859	0.563	0.688	1.016	**99824**[2]
		1.562	1.859	0.563	0.688	1.016	**99156**
1.566	**1.572**	1.569	1.859	0.625	0.750	1.016	**99159**
1.569	**1.575**	1.575	1.850	0.390	0.509	1.000	**99153**
1.572	**1.578**	1.578	1.850	0.512	0.630	1.023	**99825**[2]
		1.578	1.850	0.512	0.630	1.023	**99157**
1.602	**1.608**	1.605	1.938	0.500	0.641	1.000	**99160**
1.608	**1.614**	1.614	1.938	0.500	0.625	1.016	**99163**
1.622	**1.628**	1.625	1.875	0.313	0.438	1.016	**99161**
		1.625	1.875	0.563	0.688	0.813	**99826**[2]
		1.625	1.875	0.563	0.688	0.813	**99162**
1.647	**1.654**	1.650	2.087	0.445	0.571	0.846	**99166**
		1.650	2.087	0.563	0.689	0.827	**99169**
		1.654	2.087	0.563	0.689	0.827	**99873**[2]
1.653	**1.659**	1.656	2.087	0.550	0.689	0.827	**99165**

[1] Possible max. distance of the rear groove from the shaft end when the installation tool supplied with the sleeve is used
[2] SKF Speedi-Sleeve Gold

SKF Speedi-Sleeve – inch dimensions
d_1 **1.684 – 2.441** in.

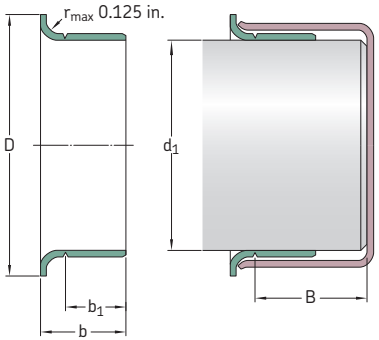

All sleeves listed in the product table can be manufactured as both standard and Gold version.

Shaft diameter range		Nominal dimensions					Designation
d_1 min	max	d_1	D ±0.063	b_1 ±0.031	b ±0.031	B[1]	
in.		in.					–
1.684	**1.690**	1.688	1.906	0.563	0.688	0.875	**99168**
1.685	**1.691**	1.688	1.906	0.313	0.438	0.875	**99167**
1.687	**1.693**	1.693	1.906	0.500	0.625	0.844	**99182**
1.715	**1.721**	1.719	2.031	0.563	0.688	0.813	**99171**
1.736	**1.742**	1.739	2.063	0.375	0.500	0.813	**99170**
1.747	**1.753**	1.750	2.055	0.375	0.500	0.813	**99172**
		1.750	2.063	0.531	0.625	0.878	**99180**
		1.750	2.063	0.563	0.688	0.813	**99827**[2]
		1.750	2.063	0.563	0.688	0.813	**99174**
		1.750	2.063	0.750	0.875	0.813	**99828**[2]
		1.750	2.063	0.750	0.875	0.813	**99175**
1.761	**1.767**	1.766	2.063	0.563	0.688	0.813	**99829**[2]
		1.766	2.063	0.563	0.688	0.813	**99176**
1.769	**1.775**	1.772	2.087	0.551	0.669	0.812	**99830**[2]
		1.772	2.087	0.551	0.669	0.812	**99177**
1.778	**1.784**	1.781	2.125	0.667	0.800	1.062	**99179**
1.809	**1.815**	1.813	2.090	0.563	0.688	1.000	**99831**[2]
		1.813	2.090	0.563	0.688	1.000	**99181**
1.857	**1.863**	1.859	2.156	0.563	0.688	1.000	**99185**
1.866	**1.872**	1.868	2.188	0.889	1.025	1.000	**99186**
1.872	**1.878**	1.875	2.203	0.175	0.295	0.744	**99190**
		1.875	2.203	0.295	0.415	0.744	**99188**
		1.875	2.203	0.375	0.516	1.050	**99184**
		1.875	2.203	0.563	0.688	1.000	**99832**[2]
		1.875	2.203	0.563	0.688	1.000	**99187**

[1] Possible max. distance of the rear groove from the shaft end when the installation tool supplied with the sleeve is used
[2] SKF Speedi-Sleeve Gold

Shaft diameter range		Nominal dimensions					Designation
d_1 min	max	d_1	D ±0.063	b_1 ±0.031	b ±0.031	B[1]	
in.		in.					–
1.887	**1.893**	1.891	2.205	0.551	0.668	0.984	**99189**
1.909	**1.915**	1.912	2.219	0.375	0.500	1.000	**99192**
1.934	**1.940**	1.938	2.219	0.563	0.688	1.000	**99833**[2]
		1.938	2.219	0.563	0.688	1.000	**99193**
1.965	**1.971**	1.969	2.244	0.551	0.668	1.350	**99052**
		1.969	2.244	0.551	0.668	0.984	**99196**
1.977	**1.983**	1.980	2.313	0.563	0.704	1.050	**99198**
1.997	**2.003**	2.000	2.406	0.563	0.688	1.006	**99834**[2]
		2.000	2.406	0.563	0.688	1.000	**99199**
		2.000	2.406	0.875	1.000	1.000	**99835**[2]
		2.000	2.406	0.875	1.000	1.000	**99200**
2.040	**2.047**	2.047	2.469	0.500	0.625	1.359	**99878**
2.057	**2.063**	2.063	2.469	0.781	0.938	1.375	**99205**
2.123	**2.128**	2.125	2.422	0.500	0.750	1.281	**99210**
2.124	**2.130**	2.125	2.422	0.781	0.938	1.375	**99836**[2]
		2.125	2.422	0.781	0.938	1.375	**99212**
2.162	**2.168**	2.165	2.441	0.787	0.905	1.250	**99863**[2]
		2.165	2.441	0.787	0.905	1.250	**99215**
2.186	**2.192**	2.188	2.500	0.781	0.938	1.313	**99218**
2.198	**2.205**	2.205	2.531	0.500	0.625	1.313	**99220**
		2.205	2.531	0.779	0.936	3.150	**99224**
2.227	**2.233**	2.230	2.531	0.500	0.625	1.313	**99861**[2]
		2.230	2.531	0.500	0.625	1.313	**99229**
		2.230	2.531	0.781	0.906	1.250	**99230**
2.237	**2.243**	2.240	2.563	0.764	0.900	1.250	**99226**
2.249	**2.255**	2.250	2.531	0.313	0.438	1.313	**99838**[2]
		2.250	2.531	0.313	0.438	1.313	**99227**
		2.250	2.531	0.781	0.938	1.313	**99837**[2]
		2.250	2.531	0.781	0.938	1.313	**99225**
2.280	**2.286**	2.283	2.598	0.787	0.938	1.375	**99219**
2.309	**2.315**	2.313	2.688	0.781	0.938	1.375	**99231**
2.327	**2.333**	2.328	2.750	0.750	0.875	1.500	**99233**
2.359	**2.365**	2.362	2.785	0.370	0.450	1.471	**99241**
		2.362	2.785	0.787	0.905	1.375	**99869**[2]
		2.362	2.785	0.787	0.905	1.375	**99235**
2.372	**2.378**	2.375	2.750	0.594	0.750	1.375	**99238**
2.374	**2.380**	2.375	2.750	0.526	0.683	1.375	**99240**
		2.375	2.750	0.781	0.938	1.375	**99839**[2]
		2.375	2.750	0.781	0.938	1.375	**99237**
2.434	**2.441**	2.438	2.828	0.781	0.938	1.393	**99243**
		2.441	2.828	0.500	0.625	1.425	**99244**
2.435	**2.441**	2.438	2.828	0.500	0.625	1.425	**99242**

[1] Possible max. distance of the rear groove from the shaft end when the installation tool supplied with the sleeve is used
[2] SKF Speedi-Sleeve Gold

SKF Speedi-Sleeve – inch dimensions
d_1 **2.489 – 3.256** in.

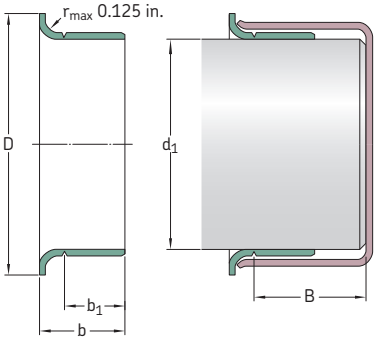

All sleeves listed in the product table can be manufactured as both standard and Gold version.

Shaft diameter range		**Nominal dimensions**					**Designation**
d_1 min	max	d_1	D ±0.063	b_1 ±0.031	b ±0.031	B[1]	
in.		in.					–
2.489	**2.495**	2.492	2.875	0.781	0.938	1.393	**99249**
2.497	**2.503**	2.500	2.820	0.555	0.650	0.890	**99253**
2.500	**2.506**	2.500	2.828	0.500	0.656	1.393	**99248**
		2.500	2.820	0.781	0.938	1.375	**99840**[2]
		2.500	2.820	0.781	0.938	1.375	**99250**
2.510	**2.516**	2.516	2.828	0.781	0.906	1.438	**99251**
2.556	**2.562**	2.559	2.850	0.787	0.905	1.375	**99841**[2]
		2.559	2.850	0.787	0.905	1.375	**99254**
2.560	**2.566**	2.563	2.891	0.781	0.938	1.375	**99256**
2.595	**2.601**	2.598	2.990	0.781	0.938	1.250	**99259**
2.618	**2.624**	2.621	3.047	0.781	0.938	1.375	**99261**
2.621	**2.627**	2.625	3.047	0.781	0.906	1.375	**99264**
2.622	**2.628**	2.625	3.047	0.500	0.625	1.375	**99260**
2.625	**2.631**	2.625	3.047	0.781	0.938	1.375	**99842**[2]
		2.625	3.047	0.781	0.938	1.375	**99262**
2.670	**2.677**	2.677	3.125	0.750	0.875	1.688	**99266**
2.727	**2.733**	2.730	3.125	0.781	0.906	1.313	**99268**
2.740	**2.746**	2.743	3.065	0.781	0.938	1.250	**99273**
2.745	**2.751**	2.750	3.125	0.781	0.938	1.250	**99843**[2]
		2.750	3.125	0.781	0.938	1.250	**99274**
2.747	**2.753**	2.750	3.075	1.438	1.625	1.625	**99267**

[1] Possible max. distance of the rear groove from the shaft end when the installation tool supplied with the sleeve is used
[2] SKF Speedi-Sleeve Gold

Shaft diameter range		Nominal dimensions					Designation
d_1 min	max	d_1	D ±0.063	b_1 ±0.031	b ±0.031	B[1]	
in.		in.					–
2.750	**2.756**	2.750	3.125	0.406	0.563	1.250	**99272**
		2.750	3.125	0.781	0.938	1.250	**99844**[2]
		2.750	3.125	0.781	0.938	1.250	**99275**
		2.750	3.125	1.125	1.250	1.312	**99269**
2.753	**2.759**	2.756	3.125	0.787	0.945	1.250	**99276**
2.809	**2.815**	2.813	3.188	0.594	0.688	1.250	**99281**
2.828	**2.835**	2.835	3.225	0.750	0.875	1.343	**99870**[2]
		2.835	3.225	0.750	0.875	1.343	**99284**
2.838	**2.844**	2.838	3.225	0.500	0.656	1.250	**99845**[2]
		2.838	3.225	0.500	0.656	1.250	**99282**
2.866	**2.872**	2.869	3.188	0.781	0.938	1.250	**99286**
2.873	**2.879**	2.875	3.219	0.781	0.938	1.250	**99846**[2]
		2.875	3.219	0.781	0.938	1.250	**99287**
2.937	**2.943**	2.938	3.344	0.500	0.641	1.331	**99290**
		2.938	3.344	0.781	0.938	1.313	**99847**[2]
		2.940	3.344	0.781	0.938	1.313	**99293**
2.950	**2.956**	2.953	3.273	0.594	0.690	1.083	**99289**
		2.953	3.305	0.866	1.024	1.313	**99875**[2]
		2.953	3.305	0.866	1.024	1.313	**99294**
2.972	**2.976**	2.974	3.235	0.813	1.000	1.250	**99292**
2.990	**2.996**	2.993	3.359	0.484	0.625	1.331	**99291**
		2.993	3.359	0.563	0.688	1.375	**99298**
		2.993	3.350	0.813	1.000	1.281	**99299**
2.997	**3.003**	3.000	3.240	0.813	0.938	1.375	**99296**
3.000	**3.006**	3.000	3.345	0.625	0.813	1.280	**99048**
		3.000	3.235	0.813	1.000	1.281	**99848**[2]
		3.000	3.235	0.813	1.000	1.281	**99300**
3.008	**3.014**	3.011	3.355	0.500	0.625	2.000	**99301**
3.064	**3.071**	3.071	3.468	0.750	0.875	2.056	**99306**
3.120	**3.126**	3.125	3.531	0.688	0.813	2.000	**99311**
		3.125	3.531	0.813	1.000	2.000	**99849**[2]
		3.125	3.531	0.813	1.000	2.000	**99312**
3.124	**3.132**	3.125	3.525	0.551	0.709	2.031	**99053**
3.142	**3.150**	3.150	3.540	0.750	0.886	1.375	**99313**
3.146	**3.153**	3.150	3.543	0.433	0.591	1.375	**99317**
		3.150	3.543	0.827	0.945	1.375	**99315**
3.225	**3.231**	3.228	3.585	0.660	0.848	1.750	**99328**
3.247	**3.253**	3.250	3.594	0.813	1.000	1.375	**99322**
3.250	**3.256**	3.250	3.575	0.595	0.719	1.375	**99850**[2]
		3.250	3.575	0.595	0.719	1.375	**99324**
		3.250	3.585	0.688	0.875	1.250	**99326**
		3.250	3.585	0.813	1.000	1.375	**99851**[2]
		3.250	3.585	0.813	1.000	1.375	**99325**

[1] Possible max. distance of the rear groove from the shaft end when the installation tool supplied with the sleeve is used
[2] SKF Speedi-Sleeve Gold

SKF Speedi-Sleeve – inch dimensions
d_1 **3.307 – 4.728** in.

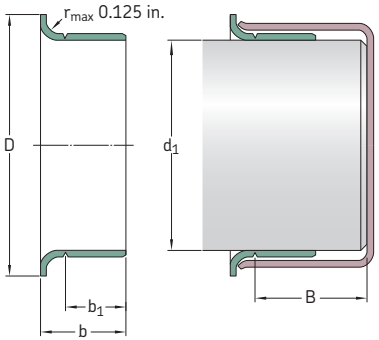

All sleeves listed in the product table can be manufactured as both standard and Gold version.

Shaft diameter range		Nominal dimensions					Designation
d_1 min	max	d_1	D ±0.063	b_1 ±0.031	b ±0.031	B[1]	
in.		in.					–
3.307	**3.313**	3.310	3.688	0.813	1.000	1.375	**99331**
3.337	**3.347**	3.342	3.700	0.669	0.827	1.378	**99332**
		3.342	3.700	0.827	0.984	1.378	**99872**[2]
		3.342	3.700	0.827	0.984	1.378	**99333**
3.338	**3.347**	3.347	3.580	0.399	0.499	1.431	**99334**
3.373	**3.379**	3.375	3.688	0.375	0.500	1.410	**99338**
		3.375	3.695	0.813	1.000	1.375	**99337**
3.435	**3.441**	3.438	3.844	0.781	0.906	1.406	**99339**
3.457	**3.465**	3.465	3.751	1.150	1.349	1.673	**99481**
3.477	**3.483**	3.480	3.835	0.781	0.906	1.406	**99340**
3.497	**3.503**	3.500	3.844	0.625	0.813	1.347	**99346**
3.500	**3.506**	3.500	3.825	0.313	0.500	1.347	**99347**
		3.500	3.844	0.813	1.000	1.347	**99852**[2]
		3.500	3.844	0.813	1.000	1.347	**99350**
3.501	**3.507**	3.504	3.844	0.625	0.813	1.348	**99349**
3.540	**3.546**	3.543	4.000	0.438	0.538	1.813	**99352**
		3.543	4.000	0.526	0.667	1.750	**99353**
		3.543	4.000	0.710	0.906	1.813	**99351**
		3.543	4.000	0.906	1.102	1.750	**99354**
3.560	**3.566**	3.563	3.900	0.813	1.000	1.750	**99356**
3.618	**3.624**	3.621	4.031	0.813	1.000	1.750	**99360**
3.623	**3.629**	3.625	4.025	0.500	0.625	1.750	**99363**
		3.625	4.031	0.813	1.000	1.750	**99362**
3.684	**3.690**	3.688	4.031	0.313	0.438	0.875	**99368**

[1] Possible max. distance of the rear groove from the shaft end when the installation tool supplied with the sleeve is used
[2] SKF Speedi-Sleeve Gold

Shaft diameter range		Nominal dimensions					Designation
d_1 min	max	d_1	D ±0.063	b_1 ±0.031	b ±0.031	B[1]	
in.		in.					–
3.685	**3.691**	3.688	4.025	0.813	0.938	1.800	**99365**
3.727	**3.733**	3.730	4.016	0.469	0.594	1.800	**99359**
		3.730	4.025	0.781	0.906	1.800	**99366**
3.737	**3.743**	3.740	4.025	0.827	0.945	1.800	**99369**
3.740	**3.746**	3.743	4.031	0.344	0.500	1.800	**99374**
		3.743	4.035	0.469	0.594	1.800	**99364**
3.746	**3.752**	3.749	4.025	0.563	0.688	1.800	**99376**
3.750	**3.756**	3.750	4.020	0.688	0.875	1.800	**99853**[2]
		3.753	4.025	0.344	0.500	1.800	**99367**
		3.753	4.020	0.688	0.875	1.800	**99372**
3.868	**3.874**	3.871	4.185	0.813	1.000	1.875	**99386**
3.873	**3.879**	3.875	4.219	0.813	1.000	1.875	**99387**
3.935	**3.941**	3.938	4.313	0.813	1.000	2.050	**99854**[2]
		3.938	4.313	0.813	1.000	2.050	**99393**
3.998	**4.006**	4.000	4.375	0.500	0.625	2.066	**99401**
		4.000	4.375	0.600	0.725	2.050	**99395**
		4.000	4.375	0.650	0.775	1.375	**99400**
		4.000	4.375	0.813	1.000	2.050	**99855**[2]
		4.000	4.375	0.813	1.000	2.050	**99399**
4.090	**4.098**	4.094	4.438	0.787	0.945	1.417	**99409**
4.122	**4.130**	4.125	4.470	0.813	1.000	1.375	**99412**
4.130	**4.138**	4.134	4.470	0.787	0.913	1.378	**99413**
4.183	**4.191**	4.188	4.500	0.813	1.000	1.375	**99418**
4.226	**4.234**	4.234	4.610	0.781	0.906	1.438	**99423**
4.248	**4.256**	4.250	4.610	0.813	1.000	1.438	**99424**
4.322	**4.331**	4.331	4.921	0.448	0.589	1.297	**99434**
4.327	**4.335**	4.328	4.921	0.509	0.650	1.250	**99435**
4.370	**4.378**	4.375	4.750	0.813	1.000	1.650	**99437**
4.401	**4.409**	4.409	4.750	0.750	0.886	1.300	**99438**
4.434	**4.442**	4.438	4.813	1.000	1.142	1.313	**99439**
4.496	**4.504**	4.500	4.850	0.813	1.000	1.250	**99856**[2]
		4.500	4.900	0.813	1.000	1.250	**99450**
4.523	**4.531**	4.528	5.000	0.813	0.938	1.250	**99452**
4.621	**4.629**	4.625	5.000	0.438	0.625	1.375	**99465**
		4.625	5.063	1.000	1.250	1.375	**99463**
4.685	**4.693**	4.688	5.063	0.813	1.000	1.375	**99468**
4.720	**4.728**	4.724	5.110	0.315	0.433	1.323	**99471**
		4.724	5.110	0.787	0.984	1.260	**99473**

[1] Possible max. distance of the rear groove from the shaft end when the installation tool supplied with the sleeve is used
[2] SKF Speedi-Sleeve Gold

SKF Speedi-Sleeve – inch dimensions
d_1 **4.746 – 8.005** in.

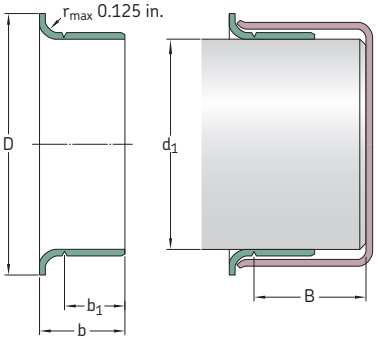

All sleeves listed in the product table can be manufactured as both standard and Gold version.

Shaft diameter range		Nominal dimensions					Designation
d_1 min	max	d_1	D ±0.063	b_1 ±0.031	b ±0.031	B[1]	
in.		in.					–
4.746	**4.754**	4.750	5.000	0.500	0.750	1.500	**99475**
4.799	**4.807**	4.803	5.177	0.787	0.945	1.260	**99472**
4.839	**4.847**	4.843	5.229	0.787	0.984	1.244	**99484**
4.871	**4.879**	4.875	5.250	0.625	0.750	1.438	**99487**
4.917	**4.925**	4.921	5.400	0.394	0.551	1.438	**99490**
		4.921	5.400	1.024	1.260	1.438	**99492**
4.998	**5.006**	5.000	5.400	0.540	0.681	1.438	**99501**
		5.000	5.400	0.688	0.875	1.438	**99857**[2]
		5.000	5.400	0.688	0.875	1.438	**99498**
		5.000	5.390	0.813	1.000	1.438	**99858**[2]
		5.000	5.390	0.813	1.000	1.438	**99499**
5.032	**5.039**	5.039	5.325	1.150	1.349	1.587	**99482**
5.110	**5.118**	5.114	5.493	0.750	0.938	1.181	**99494**
5.117	**5.125**	5.118	5.493	0.866	0.996	1.280	**99874**[2]
		5.125	5.493	0.866	0.996	1.280	**99491**
5.120	**5.128**	5.125	5.500	0.813	1.000	1.250	**99513**
5.246	**5.254**	5.250	5.560	0.813	1.000	1.250	**99525**
5.307	**5.315**	5.311	5.735	0.807	1.000	1.250	**99533**
5.371	**5.379**	5.375	5.875	0.813	1.000	1.250	**99537**
5.434	**5.442**	5.438	5.750	1.500	1.688	1.875	**99548**
5.472	**5.480**	5.476	5.900	0.563	0.750	1.234	**99547**

[1] Possible max. distance of the rear groove from the shaft end when the installation tool supplied with the sleeve is used
[2] SKF Speedi-Sleeve Gold

Shaft diameter range		Nominal dimensions					Designation
d_1 min	max	d_1	D ±0.063	b_1 ±0.031	b ±0.031	B[1]	
in.		in.					–
5.498	**5.506**	5.500	5.938	0.518	0.705	1.250	**99550**
		5.500	5.938	0.813	1.000	1.250	**99859**[2]
		5.500	5.938	0.813	1.000	1.250	**99549**
5.508	**5.516**	5.512	5.945	0.807	1.000	1.250	**99552**
5.621	**5.629**	5.625	6.188	0.875	1.000	1.812	**99560**
5.699	**5.709**	5.709	6.100	0.750	0.875	1.812	**99571**
5.726	**5.734**	5.734	6.100	0.563	0.750	1.938	**99562**
5.746	**5.754**	5.750	6.180	0.813	1.000	1.750	**99575**
5.871	**5.879**	5.875	6.188	1.000	1.250	1.313	**99862**[2]
		5.875	6.188	1.000	1.250	1.313	**99587**
5.896	**5.906**	5.905	6.260	1.024	1.181	1.280	**99595**
5.934	**5.942**	5.938	6.375	1.000	1.125	1.875	**99596**
5.995	**6.003**	6.000	6.360	0.500	0.750	1.750	**99601**
		6.000	6.375	1.000	1.250	1.750	**99599**
6.058	**6.068**	6.063	6.375	1.024	1.181	1.299	**99605**
6.092	**6.102**	6.097	6.575	1.024	1.181	1.299	**99606**
6.198	**6.208**	6.203	6.625	0.813	1.063	1.750	**99620**
6.245	**6.255**	6.250	6.625	1.031	1.250	1.750	**99625**
6.289	**6.299**	6.299	6.750	1.000	1.250	1.375	**99630**
6.495	**6.505**	6.500	7.000	1.000	1.250	1.375	**99650**
6.683	**6.693**	6.688	7.188	1.250	1.496	1.750	**99640**
6.745	**6.755**	6.750	7.125	0.813	1.063	1.750	**99675**
6.880	**6.890**	6.890	7.362	1.102	1.260	1.378	**99687**
6.995	**7.005**	7.000	7.475	1.000	1.250	1.688	**99864**[2]
		7.000	7.475	1.000	1.250	1.688	**99700**
7.077	**7.087**	7.087	7.500	1.299	1.496	1.752	**99721**
7.244	**7.254**	7.250	7.760	1.250	1.500	2.175	**99725**
7.273	**7.283**	7.278	7.760	1.260	1.496	2.165	**99726**
7.444	**7.454**	7.453	7.860	0.813	1.000	1.250	**99745**
7.495	**7.505**	7.500	7.875	0.813	1.000	1.250	**99750**
7.745	**7.755**	7.750	8.270	1.000	1.313	1.875	**99775**
7.869	**7.879**	7.875	8.375	1.359	1.500	1.750	**99787**
7.933	**7.943**	7.938	8.375	1.000	1.250	1.750	**99799**
7.995	**8.005**	8.000	8.375	1.000	1.250	1.750	**99800**

[1] Possible max. distance of the rear groove from the shaft end when the installation tool supplied with the sleeve is used
[2] SKF Speedi-Sleeve Gold

Wear sleeves for heavy industrial applications (LDSLV)

General

Outside contamination particles and polishing friction between a rotating shaft and a seal can, over time, result in severe shaft damage. Instead of repairing or replacing the damaged shaft, SKF recommends using wear sleeves for heavy industrial applications (LDSLV) for shaft diameters ranging from 211,15 to 1 143 mm *(8.313 to 45 in.)*. The sleeves are made to order for shaft diameters within the primary ranges listed in **tables 1** and **2**. A selection of sizes is listed in the product tables starting on **page 362**.

LDSLV3 and LDSLV4 are recommended for applications where operating conditions for the seals are difficult, particularly where solid contaminants can reach the seals, like in rolling mills, primary metal plants and in chemical and mineral plants.

In applications where seal wear and shaft damage can be expected, SKF recommends installing the sleeves before the machine is operational. By installing them from the outset, it will not be necessary to rework the shaft before installing a replacement sleeve and the original size can be used for the replacement seal.

Table 1

Primary dimension range of LDSLV3

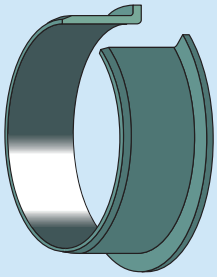

Shaft range		Width[1]	
over	incl.	min	max
mm/*in.*		mm/*in.*	
211,15 *8.313*	736,60 *29.000*	17,48 *0.688*	63,50 *2.500*
736,60 *29.000*	1 143,00 *45.000*	25,40 *1.000*	63,50 *2.500*

[1] Total width (b), 38,10 to 50,80 mm *(1.5 to 2 in.)* at 1 143,00 mm *(45 in.)* shaft diameter

Contact SKF for LDSLV3 designs outside the primary size range.

Table 2

Primary dimension range of LDSLV4

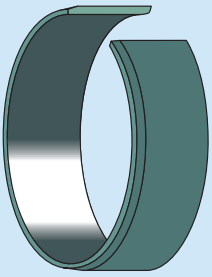

Shaft range		Width[1]	
over	incl.	min	max
mm/*in.*		mm/*in.*	
211,15 *8.313*	736,60 *29.000*	12,70 *0.500*	63,50 *2.500*
736,60 *29.000*	1 143,00 *45.000*	19,05 *0.750*	63,50 *2.500*

[1] Total width (b), 38,10 to 50,80 mm *(1.5 to 2 in.)* at 1 143,00 mm *(45 in.)* shaft diameter

Contact SKF for LDSLV4 designs outside the primary size range.

Designs and features

SKF wear sleeves for heavy industrial applications are available in two designs: the LDSLV3 with a flange (→ **fig. 9**) and the LDSLV4 without a flange (→ **fig. 10**). Both designs are made of SAE 1008 chromium-plated carbon steel to enhance wear and corrosion resistance. Other sleeve materials can be provided to meet the application's specific demands. The sleeve outside diameter is specially ground to provide a precision counterface surface for the seal. The wall thickness of the standard sleeves is 2,39 mm *(0.094 in.)*.

LDSLV3 is designed with a flange to simplify final positioning of the sleeve. The width of the counterface surface for the seal is 6,35 mm *(0.25 in.)* narrower than the total width of the sleeve. The flange adds a nominal 25,4 mm *(1 in.)* over the shaft diameter. The flange height is 12,7 mm *(0.5 in.)* for all sizes. Note that force should never be applied directly to the flange when installing an LDSLV3.

LDSLV4 has the same features as LDSLV3 but has no flange. LDSLV4 is intended for applications where a flange could interfere with other components during installation, or where a wider seal counterface surface is required.

Fig. 9

LDSLV3

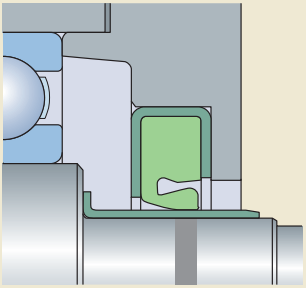

Fig. 10

LDSLV4

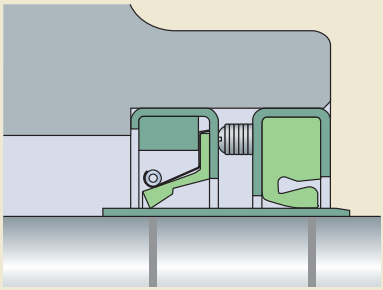

Using LDSLV designs

There are two alternative ways of using SKF wear sleeves for heavy industrial applications (→ **fig. 11**):

1. The sleeve is positioned on the shaft until it covers the damaged part and a new seal, designed for a 4,78 mm *(0.188 in.)* larger shaft diameter, is used.
2. The shaft is machined down by 4,78 mm *(0.188 in.)* in diameter, the sleeve is installed and the original seal size is used.

The reworked shaft surface for the sleeve should have a surface roughness between R_a 2,5 and 3,2 µm *(100 to 125 µin.)*.

NOTE: The shaft tolerances for LDSLV designs, due to their heated slip-fit installation, are different from those for radial shaft seals. Contact SKF for assistance if the sleeves are to be used in systems with sustained temperatures higher than 75 °C *(165 °F)* and surface speeds in excess of 20 m/s *(3 900 ft/min)*.

Fig. 11

Using LDSLV designs

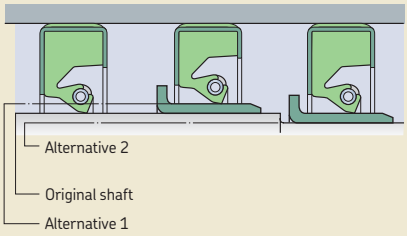

Installation

SKF wear sleeves for heavy industrial applications are designed for a heated slip-fit installation and must therefore be uniformly heated prior to installation. The sleeve temperature should be approximately 180 °C *(355 °F)*. Under no circumstances should the sleeve be heated to above 200 °C *(390 °F)*. Any heating techniques normally used for bearings are suitable, such as induction heaters or heating cabinets.

The sleeves should be installed immediately after heating since they cool rapidly and could seize on the shaft before the correct position is achieved. If repositioning is necessary, use a soft faced hammer and a wooden block. After the sleeve is in the desired position, check the lead-in chamfer for any damage during installation.

Removal

The wear sleeves can be removed either by heating them or expanding them by light hammer blows. Prior to removal, the flange of the LDSLV3 should be cut at one point, taking care not to damage the shaft surface.

Wear sleeves for heavy industrial applications – LDSLV3 and LDSLV4 – metric dimensions
d_1 **215,00 – 1 100,23** mm

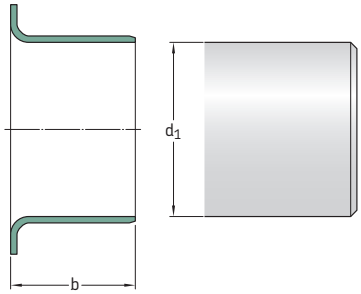

LDSLV3

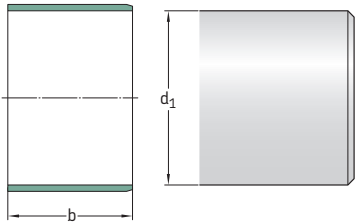

LDSLV4

Shaft diameter d_1	Sleeve width b	Reference sleeve installed outside diameter	Design	Designation
mm	mm	mm	–	–
215,00	25,40	220	LDSLV3	**90179**
215,20	35	220	LDSLV3	**87831**
220,00	25	225	LDSLV3	**90806**
	40	225	LDSLV3	**87914**
	50,80	225	LDSLV3	**87915**
235,23	18	240	LDSLV4	**90952**
240,00	17,50	250	LDSLV3	**90156**
240,21	44	245	LDSLV4	**87911**
245,20	63,50	250	LDSLV3	**90766**
275,00	22	280	LDSLV4	**90546**
280,00	45	285	LDSLV4	**90437**
285,22	63,50	290	LDSLV4	**90238**
295,20	32	300	LDSLV3	**90114**
315,19	63,50	320	LDSLV4	**90155**
320,00	63,50	325	LDSLV4	**90198**
325,22	63,50	330	LDSLV4	**90239**
335,22	39	340	LDSLV4	**90777**
	50	340	LDSLV4	**90792**
340,00	18	340	LDSLV4	**87901**
	50	340	LDSLV4	**90801**
	50	345	LDSLV3	**90113**
355,20	25,40	360	LDSLV4	**90778**
	50	360	LDSLV4	**90785**
360,00	44	365	LDSLV4	**87500**

Shaft diameter d_1	Sleeve width b	Reference sleeve installed outside diameter	Design	Designation
mm	mm	mm	–	–
360,22	45	365	LDSLV4	**90788**
365,20	20	370	LDSLV4	**87531**
395,22	63,50	400	LDSLV4	**87461**
405,23	50	410	LDSLV4	**90042**
419,99	63,50	425	LDSLV3	**97064**
435,20	63,50	440	LDSLV4	**87916**
455,00	30	460	LDSLV4	**90347**
455,20	50	460	LDSLV4	**87504**
475,18	20	480	LDSLV4	**87921**
494,44	24	500	LDSLV4	**90259**
495,20	30	500	LDSLV4	**87503**
503,25	24	508	LDSLV4	**90149**
530,00	20	535	LDSLV4	**87783**
535,23	63	540	LDSLV4	**90802**
555,20	63,50	560	LDSLV4	**90075**
575,23	63,50	580	LDSLV4	**90951**
585,22	55	590	LDSLV4	**90292**
595,20	58,20 63,50	600 600	LDSLV3 LDSLV4	**90120** **89997**
595,22	50	600	LDSLV3	**90241**
645,20	64	650	LDSLV4	**90004**
645,24	63,50	650	LDSLV3	**87817**
665,20	45	670	LDSLV4	**90799**
685,22	63,50	690	LDSLV4	**90953**
714,81	50	720	LDSLV4	**87820**
735,23	63	740	LDSLV4	**89949**
755,19	63,50	760	LDSLV3	**87981**
865,23	63,50	870	LDSLV4	**90221**
875,18	63,50	880	LDSLV4	**90103**
1 015,20	25	1 020	LDSLV4	**90786**
1 049,33	60	1 054	LDSLV4	**89947**
1 100,23	63	1 105	LDSLV4	**89946**

Wear sleeves for heavy industrial applications – LDSLV3 and LDSLV4 – inch dimensions
d_1 **8.313 – 10.441** in.

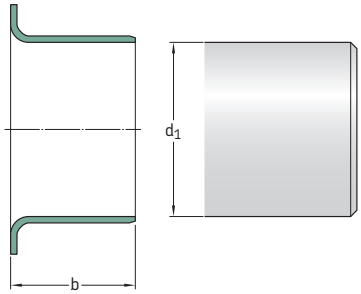

LDSLV3

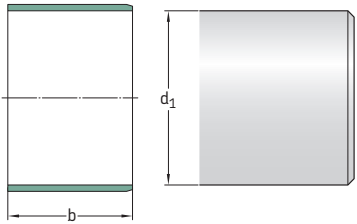

LDSLV4

Shaft diameter d_1	Sleeve width b	Reference sleeve installed outside diameter	Design	Designation
in./*mm*	in./*mm*	in./*mm*	–	–
8.313 *211,15*	1.250 *31,75*	8.501 *215,93*	LDSLV4	**85885**
8.353 *212,17*	1.500 *38,10*	8.541 *216,94*	LDSLV4	**86907**
8.500 *215,90*	1.000 *25,40*	8.688 *220,68*	LDSLV3	**85158**
8.625 *219,08*	2.750 *69,85*	8.813 *223,85*	LDSLV3	**85643**
8.661 *220,00*	1.000 *25,40*	8.849 *224,76*	LDSLV4	**87319**
8.687 *220,65*	2.250 *57,15*	8.875 *225,43*	LDSLV3	**86543**
8.750 *222,25*	1.500 *38,10*	8.938 *227,03*	LDSLV3	**87196**
8.812 *223,82*	2.000 *50,80*	9.000 *228,60*	LDSLV4	**86551**
8.813 *223,85*	1.000 *25,40*	9.001 *228,63*	LDSLV3	**85688**
8.866 *225,20*	2.500 *63,50*	9.054 *229,97*	LDSLV4	**87166**
8.867 *225,22*	1.000 *25,40*	9.055 *230,00*	LDSLV4	**87462**
8.875 *225,43*	1.250 *31,75* 1.250 *31,75*	9.063 *230,20* 9.063 *230,20*	LDSLV3 LDSLV4	**85973** **87526**
8.938 *227,03*	2.500 *63,50*	9.126 *231,80*	LDSLV4	**86546**

Shaft diameter d_1	Sleeve width b	Reference sleeve installed outside diameter	Design	Designation
in./*mm*	in./*mm*	in./*mm*	–	–
9.000 *228,60*	1.000 *25,40*	9.188 *233,38*	LDSLV3	**87555**
9.055 *230,00*	1.000 *25,40*	9.243 *234,77*	LDSLV3	**89943**
9.063 *230,20*	1.500 *38,10*	9.251 *234,98*	LDSLV4	**85931**
9.125 *231,78*	1.000 *25,40*	9.313 *236,55*	LDSLV4	**86547**
	1.500 *38,10*	9.313 *236,55*	LDSLV4	**90130**
9.250 *234,95*	0.875 *22,23*	9.438 *239,73*	LDSLV4	**84643**
9.260 *235,20*	1.102 *27,99*	9.448 *239,98*	LDSLV4	**87789**
9.313 *236,55*	1.500 *38,10*	9.501 *241,33*	LDSLV3	**85377**
9.449 *240,00*	1.181 *30,00*	9.637 *244,78*	LDSLV4	**87144**
9.500 *241,30*	2.500 *63,50*	9.688 *246,08*	LDSLV4	**86562**
	1.000 *25,40*	9.688 *246,08*	LDSLV3	**86633**
9.563 *242,90*	1.000 *25,40*	9.751 *247,68*	LDSLV4	**85073**
	2.000 *50,80*	9.751 *247,68*	LDSLV4	**85397**
9.750 *247,65*	1.438 *36,53*	9.938 *252,43*	LDSLV4	**84965**
	2.250 *57,15*	9.938 *252,43*	LDSLV4	**85045**
9.813 *249,25*	1.125 *28,58*	10.001 *254,03*	LDSLV4	**86413**
	2.000 *50,80*	10.001 *254,03*	LDSLV3	**84156**
9.835 *249,81*	1.575 *40,01*	10.023 *254,58*	LDSLV4	**90773**
10.000 *254,00*	1.000 *25,40*	10.188 *258,78*	LDSLV3	**90070**
10.063 *255,60*	2.250 *57,15*	10.251 *260,38*	LDSLV4	**86000**
10.188 *258,78*	1.125 *28,58*	10.376 *263,55*	LDSLV4	**84962**
10.240 *260,00*	1.970 *50,00*	10.424 *264,77*	LDSLV3	**87738**
10.313 *261,95*	2.000 *50,80*	10.501 *266,73*	LDSLV4	**85629**
	2.250 *57,15*	10.501 *266,73*	LDSLV3	**85191**
10.441 *265,20*	2.165 *54,99*	10.629 *269,98*	LDSLV4	**86798**

Wear sleeves for heavy industrial applications – LDSLV3 and LDSLV4 – inch dimensions
d_1 **10.500 – 12.598** in.

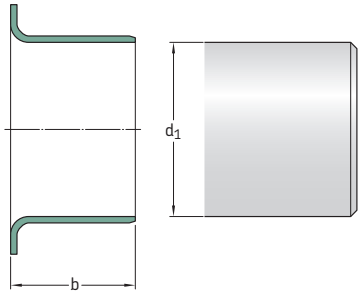

LDSLV3

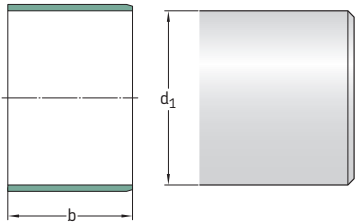

LDSLV4

Shaft diameter d_1	**Sleeve width** b	**Reference sleeve installed outside diameter**	**Design**	**Designation**
in./*mm*	in./*mm*	in./*mm*	–	–
10.500 *266,70*	2.750 *69,85*	10.688 *271,48*	LDSLV4	**86013**
10.557 *268,15*	2.250 *57,15*	10.745 *272,92*	LDSLV4	**85491**
10.562 *268,27*	0.984 *24,99*	10.750 *273,05*	LDSLV4	**90800**
	1.750 *44,45*	10.750 *273,05*	LDSLV4	**86468**
	1.813 *46,05*	10.750 *273,05*	LDSLV4	**86544**
10.563 *268,30*	1.500 *38,10*	10.751 *273,08*	LDSLV4	**87768**
10.750 *273,05*	2.500 *63,50*	10.938 *277,83*	LDSLV4	**86435**
10.813 *274,65*	1.000 *25,40*	11.001 *279,43*	LDSLV3	**81389**
	2.000 *50,80*	11.001 *279,43*	LDSLV4	**85033**
10.846 *275,49*	0.709 *18,01*	11.034 *280,26*	LDSLV4	**86601**
10.875 *276,23*	2.000 *50,80*	11.063 *281,00*	LDSLV4	**84510**
11.000 *279,40*	1.500 *38,10*	11.188 *284,18*	LDSLV4	**86486**
	2.500 *63,50*	11.188 *284,18*	LDSLV4	**86454**
11.024 *280,00*	1.181 *30,00*	11.212 *284,78*	LDSLV4	**87142**
11.031 *280,19*	1.260 *32,00*	11.219 *284,96*	LDSLV4	**87525**

Shaft diameter d_1	Sleeve width b	Reference sleeve installed outside diameter	Design	Designation
in./*mm*	in./*mm*	in./*mm*	–	–
11.062 *280,97*	1.750 *44,45*	11.250 *285,75*	LDSLV4	**85469**
11.187 *284,15*	1.250 *31,75*	11.375 *288,93*	LDSLV4	**86269**
11.188 *284,18*	2.250 *57,15*	11.376 *288,95*	LDSLV4	**85212**
11.190 *284,23*	2.250 *57,15*	11.378 *289,00*	LDSLV4	**87566**
11.313 *287,35*	1.500 *38,10*	11.501 *292,13*	LDSLV4	**84094**
11.375 *288,93*	2.250 *57,15*	11.563 *293,70*	LDSLV4	**86145**
11.417 *290,00*	1.750 *44,45*	11.605 *294,77*	LDSLV4	**86441**
11.500 *292,10*	0.750 *19,05*	11.688 *296,88*	LDSLV4	**90761**
11.562 *293,67*	1.000 *25,40*	11.750 *298,45*	LDSLV4	**90333**
11.623 *295,22*	1.417 *35,99*	11.811 *300,00*	LDSLV3	**87875**
11.750 *298,45*	2.375 *60,33*	11.938 *303,23*	LDSLV3	**87872**
11.812 *300,02*	1.125 *28,58*	12.000 *304,80*	LDSLV4	**86687**
11.813 *300,05*	1.500 *38,10*	12.001 *304,83*	LDSLV4	**85979**
	2.250 *57,15*	12.001 *304,83*	LDSLV3	**84819**
	2.750 *69,85*	12.001 *304,83*	LDSLV4	**85844**
11.969 *304,00*	0.709 *18,00*	12.157 *308,79*	LDSLV4	**86600**
12.000 *304,80*	2.250 *57,15*	12.188 *309,58*	LDSLV4	**85577**
	2.250 *57,15*	12.188 *309,58*	LDSLV3	**87406**
12.063 *306,40*	0.625 *15,88*	12.251 *311,18*	LDSLV4	**85418**
	2.500 *63,50*	12.251 *311,18*	LDSLV3	**86404**
12.312 *312,72*	1.500 *38,10*	12.500 *317,50*	LDSLV4	**90174**
12.313 *312,75*	0.750 *19,05*	12.501 *317,53*	LDSLV4	**83760**
12.500 *317,50*	2.125 *53,98*	12.688 *322,28*	LDSLV3	**86169**
12.598 *320,00*	0.984 *25,00*	12.786 *324,76*	LDSLV3	**87434**

Wear sleeves for heavy industrial applications – LDSLV3 and LDSLV4 – inch dimensions
d_1 **12.750 – 16.813** in.

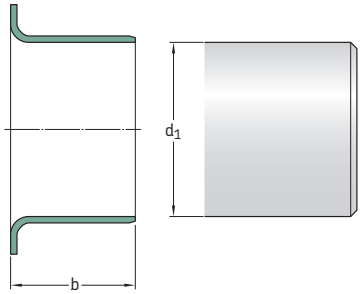

LDSLV3

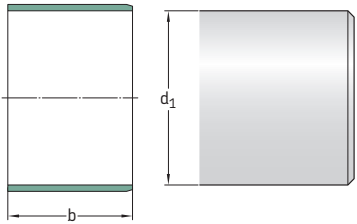

LDSLV4

Shaft diameter d_1	Sleeve width b	Reference sleeve installed outside diameter	Design	Designation
in./*mm*	in./*mm*	in./*mm*	–	–
12.750 *323,85*	0.688 *17,48*	12.938 *328,63*	LDSLV4	**87513**
	1.125 *28,58*	12.938 *328,63*	LDSLV3	**82099**
	1.500 *38,10*	12.938 *328,63*	LDSLV3	**90143**
12.813 *325,45*	1.000 *25,40*	13.001 *330,23*	LDSLV4	**86258**
	1.375 *34,93*	13.001 *330,23*	LDSLV4	**84263**
	2.000 *50,80*	13.001 *330,23*	LDSLV3	**84390**
	2.500 *63,50*	13.001 *330,23*	LDSLV4	**86722**
13.000 *330,20*	1.750 *44,45*	13.188 *334,98*	LDSLV4	**85535**
13.063 *331,80*	1.125 *28,58*	13.251 *336,53*	LDSLV4	**84963**
13.313 *338,15*	0.813 *20,65*	13.501 *342,93*	LDSLV4	**86688**
	1.500 *38,10*	13.501 *342,93*	LDSLV4	**87463**
	2.000 *50,80*	13.501 *342,93*	LDSLV3	**85852**
13.813 *350,85*	1.500 *38,10*	14.001 *355,63*	LDSLV3	**81390**
	2.000 *50,80*	14.001 *355,63*	LDSLV4	**85179**
14.000 *355,60*	1.375 *34,93*	14.188 *360,38*	LDSLV3	**89951**
	1.500 *38,10*	14.188 *360,38*	LDSLV3	**81352**
14.173 *359,99*	1.000 *25,40*	14.361 *364,77*	LDSLV4	**87445**

Shaft diameter d_1	Sleeve width b	Reference sleeve installed outside diameter	Design	Designation
in./*mm*	in./*mm*	in./*mm*	–	–
14.313 *363,55*	1.500 *38,10*	14.501 *368,33*	LDSLV4	**86429**
14.438 *366,73*	2.500 *63,50*	14.626 *371,50*	LDSLV3	**86403**
14.500 *368,30*	1.000 *25,40*	14.688 *373,08*	LDSLV4	**85914**
14.813 *376,25*	1.500 *38,10* 2.125 *53,98*	15.001 *381,03* 15.001 *381,03*	LDSLV4 LDSLV3	**87723** **81391**
15.000 *381,00*	1.000 *25,40*	15.188 *385,78*	LDSLV4	**87247**
15.062 *382,57*	0.750 *19,05*	15.250 *387,35*	LDSLV4	**90272**
15.066 *382,68*	1.000 *25,40*	15.254 *387,45*	LDSLV3	**87871**
15.188 *385,78*	2.500 *63,50*	15.376 *390,55*	LDSLV4	**87569**
15.250 *387,35*	0.750 *19,05*	15.438 *392,13*	LDSLV3	**84964**
15.560 *395,22*	0.906 *23,01*	15.748 *400,00*	LDSLV4	**85582**
15.812 *401,62*	2.500 *63,50*	16.000 *406,40*	LDSLV3	**87634**
15.813 *401,65*	2.000 *50,80* 2.000 *50,80* 2.500 *63,50*	16.001 *406,43* 16.001 *406,43* 16.001 *406,43*	LDSLV4 LDSLV3 LDSLV4	**85181** **87446** **86407**
15.998 *406,35*	2.250 *57,15*	16.186 *411,12*	LDSLV3	**85908**
16.000 *406,40*	2.000 *50,80*	16.188 *411,18*	LDSLV3	**81354**
16.063 *408,00*	0.500 *12,70* 1.250 *31,75* 1.300 *33,02* 2.000 *50,80*	16.251 *412,78* 16.251 *412,78* 16.251 *412,78* 16.251 *412,78*	LDSLV4 LDSLV4 LDSLV4 LDSLV4	**87613** **86175** **86426** **86575**
16.313 *414,35*	2.000 *50,80*	16.501 *419,13*	LDSLV4	**84697**
16.750 *425,45*	1.500 *38,10*	16.938 *430,23*	LDSLV4	**87585**
16.812 *427,02*	1.000 *25,40*	17.000 *431,80*	LDSLV4	**86737**
16.813 *427,05*	2.250 *57,15*	17.001 *431,83*	LDSLV4	**84616**

Wear sleeves for heavy industrial applications – LDSLV3 and LDSLV4 – inch dimensions
d_1 **17.250 – 25.000** in.

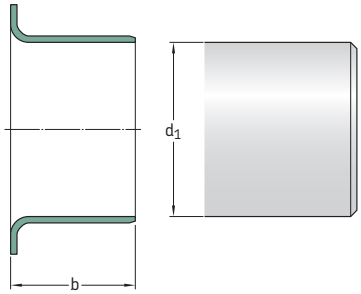

LDSLV3

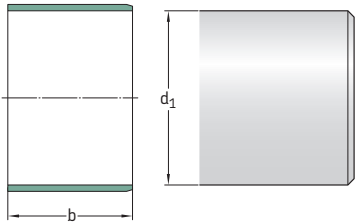

LDSLV4

Shaft diameter d_1	Sleeve width b	Reference sleeve installed outside diameter	Design	Designation
in./*mm*	in./*mm*	in./*mm*	–	–
17.250 *438,15*	1.000 *25,40*	17.438 *442,93*	LDSLV4	**90779**
	2.000 *50,80*	17.438 *442,93*	LDSLV4	**84576**
17.313 *439,75*	1.500 *38,10*	17.501 *444,53*	LDSLV4	**86430**
17.449 *443,20*	2.000 *50,80*	17.637 *447,98*	LDSLV4	**85762**
17.500 *444,50*	1.250 *31,75*	17.688 *449,28*	LDSLV4	**90770**
17.543 *445,59*	2.362 *59,99*	17.731 *450,37*	LDSLV4	**86799**
17.750 *450,85*	1.250 *31,75*	17.938 *455,63*	LDSLV4	**90774**
	2.500 *63,50*	17.938 *455,63*	LDSLV3	**86631**
17.812 *452,42*	2.125 *53,98*	18.000 *457,20*	LDSLV4	**87271**
17.813 *452,45*	2.500 *63,50*	18.001 *457,23*	LDSLV3	**86405**
18.163 *461,34*	2.000 *50,80*	18.351 *466,12*	LDSLV4	**86343**
18.312 *465,12*	1.191 *30,25*	18.500 *469,90*	LDSLV4	**90790**
18.813 *477,85*	1.750 *44,45*	19.001 *482,63*	LDSLV4	**86563**
	2.250 *57,15*	19.001 *482,63*	LDSLV4	**87015**
	2.500 *63,50*	19.001 *482,63*	LDSLV4	**86716**

Shaft diameter d_1	Sleeve width b	Reference sleeve installed outside diameter	Design	Designation
in./*mm*	in./*mm*	in./*mm*	–	–
19.496 *495,20*	2.362 *59,99*	19.684 *499,97*	LDSLV4	**87631**
19.497 *495,22*	1.575 *40,01*	19.685 *500,00*	LDSLV4	**87785**
19.500 *495,30*	1.250 *31,75*	19.688 *500,08*	LDSLV4	**90769**
19.563 *496,90*	2.750 *69,85*	19.751 *501,68*	LDSLV4	**85654**
19.813 *503,25*	1.250 *31,75*	20.001 *508,03*	LDSLV4	**84781**
20.312 *515,92*	1.000 *25,40*	20.500 *520,70*	LDSLV4	**86739**
20.813 *528,65*	1.250 *31,75* 2.125 *53,98* 2.500 *63,50*	21.001 *533,43* 21.001 *533,43* 21.001 *533,43*	LDSLV3 LDSLV4 LDSLV4	**85800** **85367** **87298**
20.865 *529,97*	2.250 *57,15*	21.053 *534,75*	LDSLV4	**90805**
20.990 *533,15*	2.250 *57,15*	21.178 *537,92*	LDSLV3	**84579**
21.000 *533,40*	2.250 *57,15*	21.188 *538,18*	LDSLV4	**87090**
21.803 *553,80*	2.362 *59,99*	21.991 *558,57*	LDSLV4	**87069**
21.813 *554,05*	2.250 *57,15*	22.001 *558,83*	LDSLV4	**84590**
22.250 *565,15*	1.000 *25,40*	22.438 *569,93*	LDSLV3	**85691**
22.303 *566,50*	2.362 *59,99*	22.491 *571,27*	LDSLV4	**87070**
22.313 *566,75*	1.250 *31,75*	22.501 *571,53*	LDSLV4	**85907**
22.812 *579,42*	2.000 *50,80*	23.000 *584,20*	LDSLV4	**90163**
23.000 *584,20*	2.000 *50,80*	23.188 *588,98*	LDSLV4	**90146**
23.434 *595,22*	0.984 *24,99*	23.622 *600,00*	LDSLV4	**87777**
23.687 *601,65*	1.950 *49,53*	23.875 *606,43*	LDSLV4	**87907**
23.812 *604,82*	0.750 *19,05* 2.500 *63,50*	24.000 *609,60* 24.000 *609,60*	LDSLV4 LDSLV4	**87922** **87960**
25.000 *635,00*	2.500 *63,50*	25.188 *639,78*	LDSLV4	**86567**

Wear sleeves for heavy industrial applications – LDSLV3 and LDSLV4 – inch dimensions
d_1 **25.312 – 42.500** in.

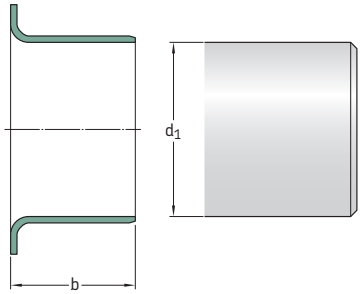

LDSLV3

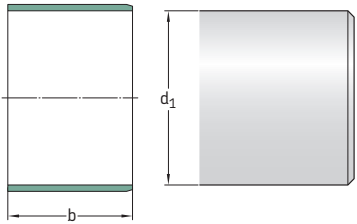

LDSLV4

Shaft diameter d_1	**Sleeve width** b	**Reference sleeve installed outside diameter**	**Design**	**Designation**
in./*mm*	in./*mm*	in./*mm*	–	–
25.312 *642,92*	2.000 *50,80*	25.500 *647,70*	LDSLV4	**86091**
25.313 *642,95*	2.500 *63,50*	25.501 *647,73*	LDSLV4	**87802**
26.000 *660,40*	2.250 *57,15*	26.188 *665,18*	LDSLV3	**86640**
26.312 *668,32*	1.375 *34,93*	26.500 *673,10*	LDSLV4	**90809**
26.813 *681,05*	1.250 *31,75* 2.250 *57,15*	27.001 *685,83* 27.001 *685,83*	LDSLV4 LDSLV4	**85384** **85531**
27.000 *685,80*	2.000 *50,80*	27.188 *690,58*	LDSLV4	**86841**
27.063 *687,40*	2.250 *57,15*	27.251 *692,18*	LDSLV4	**84764**
27.313 *693,75*	2.250 *57,15*	27.501 *698,53*	LDSLV4	**91331**
27.500 *698,50*	2.250 *57,15*	27.688 *703,28*	LDSLV4	**84711**
27.812 *706,42*	2.500 *63,50*	28.000 *711,20*	LDSLV4	**87421**
28.312 *719,12*	2.313 *58,75*	28.500 *723,90*	LDSLV3	**87623**
28.813 *731,85*	2.250 *57,15*	29.001 *736,63*	LDSLV4	**84641**
29.813 *757,25*	2.250 *57,15*	30.001 *762,03*	LDSLV4	**84642**

Shaft diameter d_1	Sleeve width b	Reference sleeve installed outside diameter	Design	Designation
in./*mm*	in./*mm*	in./*mm*	–	–
30.000 *762,00*	2.500 *63,50*	30.188 *766,78*	LDSLV3	**86641**
30.309 *769,85*	1.375 *34,93*	30.497 *774,62*	LDSLV4	**87530**
30.312 *769,92*	2.500 *63,50*	30.500 *774,70*	LDSLV3	**87842**
30.813 *782,65*	2.000 *50,80*	31.001 *787,43*	LDSLV4	**85039**
31.812 *808,02*	2.500 *63,50*	32.000 *812,80*	LDSLV4	**90810**
32.313 *820,75*	2.000 *50,80*	32.501 *825,53*	LDSLV4	**86090**
32.812 *833,42*	2.220 *56,39*	33.000 *838,20*	LDSLV4	**87850**
33.313 *846,15*	2.625 *66,68*	33.501 *850,93*	LDSLV4	**84730**
34.312 *871,52*	1.750 *44,45*	34.500 *876,30*	LDSLV4	**87529**
35.313 *896,95*	2.500 *63,50*	35.501 *901,73*	LDSLV4	**85814**
35.812 *909,62*	1.500 *38,10*	36.000 *914,40*	LDSLV4	**90332**
36.375 *923,93*	2.500 *63,50*	36.563 *928,70*	LDSLV4	**86111**
36.813 *935,05*	2.500 *63,50*	37.001 *939,83*	LDSLV4	**86458**
37.813 *960,45*	1.500 *38,10*	38.001 *965,23*	LDSLV4	**86973**
38.000 *965,20*	1.500 *38,10*	38.188 *969,98*	LDSLV4	**86840**
38.500 *977,90*	1.500 *38,10*	38.688 *982,68*	LDSLV4	**81753**
38.813 *985,85*	2.125 *53,98*	39.001 *990,63*	LDSLV4	**85123**
39.813 *1011,25*	2.125 *53,98*	40.001 *1016,03*	LDSLV4	**81826**
41.312 *1049,32*	1.968 *49,99*	41.500 *1054,10*	LDSLV4	**89948**
42.063 *1068,40*	2.125 *53,98*	42.251 *1073,18*	LDSLV4	**85038**
42.125 *1069,98*	2.125 *53,98*	42.313 *1074,75*	LDSLV4	**87054**
42.312 *1074,72*	1.250 *31,75*	42.500 *1079,50*	LDSLV4	**87379**
42.500 *1079,50*	1.250 *31,75*	42.688 *1084,28*	LDSLV4	**87392**

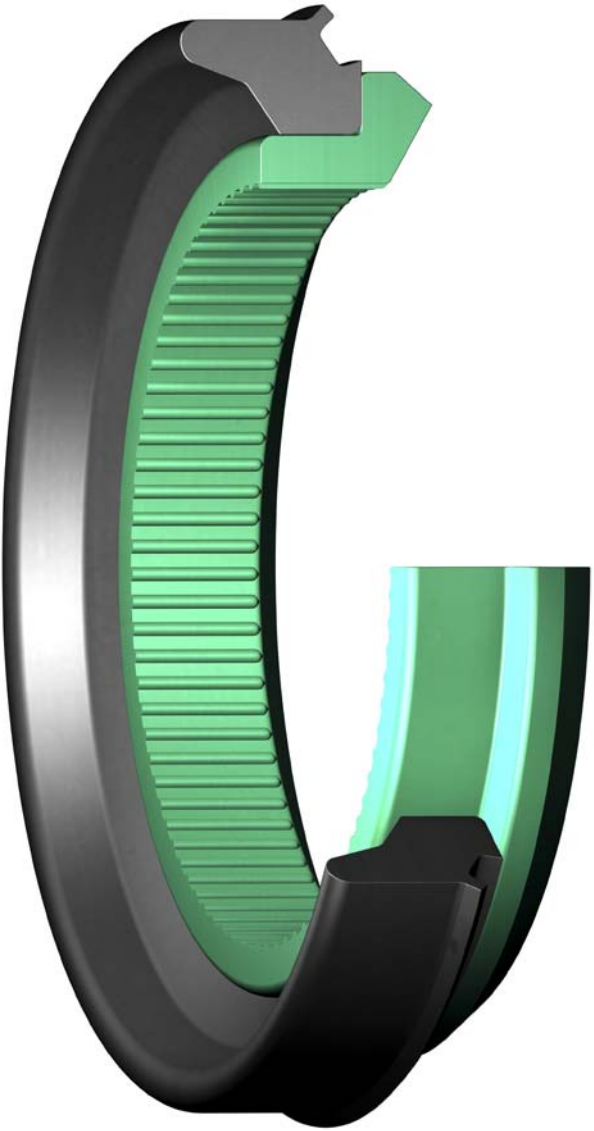

Track pin seals

General **374**

Features and benefits **374**
5.1 Product table: TP and TPM 376

5

Track pin seals

General

The SKF track pin seals, SKF Trackstar, are specifically designed for oil lubricated track chains in off-highway applications. The seals are installed on the pin that connects a pair of links in the chain (→ **fig. 1**).

Features and benefits

The basic SKF Trackstar seal design features a polyurethane sealing ring and a nitrile rubber energizer (→ **fig. 2**). The sealing ring retains the oil between the pin and the bushing and excludes contaminants. The energizer provides the static sealing ability. Ribs on the seal inside diameter enable oil to pass to provide the necessary lubrication.

There is also a heavy-duty version designed with a metal reinforcement ring moulded into the polyurethane sealing ring, providing additional rigidity for severe operating conditions (→ **fig. 3**).

Both SKF Trackstar designs are installed on a spacer ring provided by the undercarriage manufacturer. The function of the spacer ring is to ensure that the required space for the seal exists when squeezed between the link and the bushing. The spacer is designed with oil galleys that enable oil to pass for optimal lubrication of the main sealing lip.

Fig. 1

SKF Trackstar seal installation

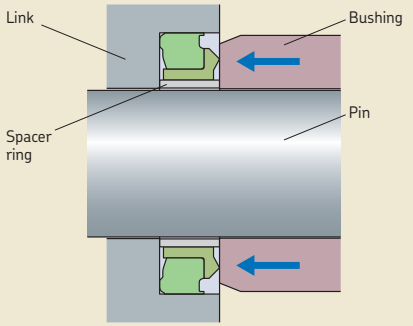

Fig. 2

SKF Trackstar seal design TP

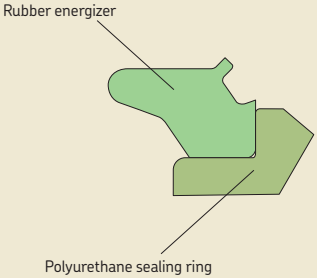

SKF Trackstar seals provide several important benefits including:

- extended service life of the undercarriage
- reduced internal bushing and pin wear
- easy installation
- interchangeability with the most commonly used sealed and lubricated track pin seals

Fig. 3

SKF Trackstar seal design TPM

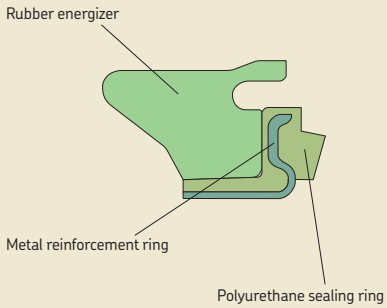

SKF Trackstar seals –TP and TPM – metric dimensions
d_1 **33,22 – 80,72** mm

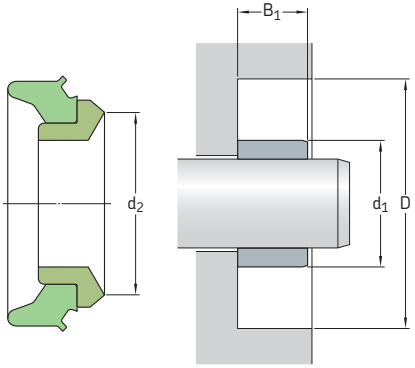

Dimensions Spacer ring outside diameter d_1 max	Bore diameter, nominal D		Operating width B_1		Lip diameter d_2 max	**Designation**
mm/*in.*						–
33,22 *1.308*	47,88 *1.885*	± 0,25 *± 0.010*	8,38 *0.330*	± 0,25 *± 0.010*	40,01 *1.575*	**33.2×47.3×11.8 TP**
36,47 *1.436*	51,99 *2.047*	± 0,25 *± 0.010*	8,31 *0.327*	± 0,25 *± 0.010*	44,45 *1.750*	**36.5×51.4×11.7 TP**
38,05 *1.498*	55,04 *2.167*	± 0,25 *± 0.010*	9,60 *0.378*	± 0,25 *± 0.010*	46,99 *1.850*	**38.1×54.4×12.8 TP**
41,86 *1.648*	59,77 *2.353*	± 0,25 *± 0.010*	9,25 *0.364*	± 0,25 *± 0.010*	50,04 *1.970*	**42.0×59.1×12.8 TP**
42,52 *1.674*	59,79 *2.354*	± 0,03 *± 0.001*	10,69 *0.421*	± 0,25 *± 0.010*	51,05 *2.010*	**43.1×59.4×14.3 TPM**
44,60 *1.756*	63,04 *2.482*	± 0,25 *± 0.010*	10,69 *0.421*	± 0,25 *± 0.010*	53,70 *2.114*	**44.7×62.7×14.2 TP**
46,20 *1.819*	64,64 *2.545*	± 0,15 *± 0.006*	10,80 *0.425*	± 0,25 *± 0.010*	56,41 *2.221*	**46.1×64.1×14.1 TP**
45,69 *1.799*	62,99 *2.480*	± 0,03 *± 0.001*	10,69 *0.421*	± 0,25 *± 0.010*	54,71 *2.154*	**46.3×62.3×14.3 TPM**
50,29 *1.980*	67,59 *2.661*	± 0,25 *± 0.010*	10,80 *0.425*	± 0,25 *± 0.010*	58,42 *2.300*	**50.3×67.0×14.7 TP**
52,60 *2.071*	70,79 *2.787*	± 0,25 *± 0.010*	10,80 *0.425*	± 0,25 *± 0.010*	61,34 *2.415*	**52.7×70.5×14.2 TP**
52,43 *2.064*	70,10 *2.760*	± 0,03 *± 0.001*	10,80 *0.425*	± 0,25 *± 0.010*	61,11 *2.406*	**53.0×69.3×14.2 TPM**
54,99 *2.165*	72,75 *2.864*	± 0,25 *± 0.010*	10,80 *0.425*	± 0,25 *± 0.010*	64,19 *2.527*	**54.9×72.4×14.8 TP**
58,19 *2.291*	75,54 *2.974*	± 0,25 *± 0.010*	10,67 *0.420*	± 0,25 *± 0.010*	67,03 *2.639*	**58.1×75.0×14.7 TP**
58,90 *2.319*	77,65 *3.057*	± 0,25 *± 0.010*	11,10 *0.437*	± 0,25 *± 0.010*	67,59 *2.661*	**58.8×77.1×15.2 TP**

Dimensions						**Designation**
Spacer ring outside diameter d_1 max	Bore diameter, nominal D		Operating width B_1		Lip diameter d_2 max	
mm/*in.*						–
61,09	82,55	± 0,13	11,10	± 0,25	70,00	**61.1×82.0×16.0 TP**
2.405	*3.250*	*± 0.005*	*0.437*	*± 0.010*	*2.756*	
63,14	83,74	± 0,25	15,49	± 0,25	73,66	**63.2×83.1×19.3 TP**
2.486	*3.297*	*± 0.010*	*0.610*	*± 0.010*	*2.900*	
63,60	83,49	± 0,25	11,13	± 0,25	74,22	**63.6×82.5×15.0 TP**
2.504	*3.287*	*± 0.010*	*0.438*	*± 0.010*	*2.922*	
67,21	87,25	± 0,25	11,13	± 0,25	77,14	**67.1×86.7×15.4 TP**
2.646	*3.435*	*± 0.010*	*0.438*	*± 0.010*	*3.037*	
76,71	99,80	± 0,13	11,10	± 0,25	89,08	**76.7×99.3×15.1 TP**
3.020	*3.929*	*± 0.005*	*0.437*	*± 0.010*	*3.507*	
80,72	106,20	± 0,13	11,10	± 0,25	92,53	**80.8×105.8×15.9 TP**
3.178	*4.181*	*± 0.005*	*0.437*	*± 0.010*	*3.643*	



Metal face seals

General **380**

Design features **380**

Lubricant requirements **381**

Permissible operating conditions **382**

Contaminants **382**

Installing HDDF seals **382**
General 382
Housing and seal preparation 382
Installation procedure 383
6.1 Product table: HDDF 384

6

Metal face seals

General

SKF metal face seals type HDDF (→ **fig. 1**) are designed for use under severe service conditions at relatively low circumferential speeds. They offer reliable protection against solid and liquid contaminants as well as leak-proof retention of lubricants. The seals were originally developed for off-road and tracked vehicles, but have been found to be equally suitable for a range of other applications where effective protection is required against sand, soil, mud, water etc. (→ **fig. 2**). These applications include:

- all types of mixers
- sand treatment equipment
- conveyors and other construction equipment
- agricultural machinery
- washing equipment
- grinding mills and other pulverizing equipment
- ore dressing equipment
- mining equipment

Fig. 1

HDDF seal

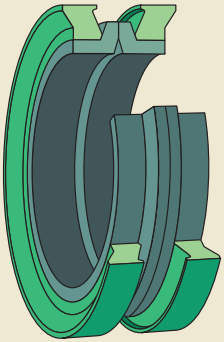

Design features

HDDF seals consist of two identical metal sealing rings and two similar Belleville washers (cup springs) made of nitrile or fluoro rubber compounds, specifically developed for these seals (→ **fig. 3** on **page 383**). The sealing rings are made of wear- and corrosion-resistant cast alloy and have finely finished sliding and sealing surfaces.

The Belleville washers of nitrile or fluoro rubber provide the necessary uniform face loading and effective sealing at the bore and outside diameters. The outside diameter of the washers adapts to the form of the bore in which they are installed. It is critical that the bore diameter and bore depth are in accordance with the dimensions listed in the product table on **pages 384** to **387**. Adequate tolerances between the seal assembly and its mating component are critical to ensure a proper sealing performance.

Lubricant requirements

A lubricant should be applied on the dynamic sealing surfaces of a metal face seal to prevent scoring and cover at least 30% of the sealing surface to properly lubricate and cool the sealing rings. The lubricant can be either a detergent like SAE 10W-40 or a mineral based oil ranging from 10 WT to 90 WT, depending on the ambient temperature. It should be noted that some oils contain additives that make them incompatible with elastomers, which can cause degradation of the Belleville washers, especially when exposed to elevated temperatures.

Although mineral oils are always the recommended lubricant, a grease lubricant can also be used in some slowly rotating or oscillating applications, where the seal face surface speed does not exceed 0,5 m/s (*100 ft/min*). At higher speeds, an oil lubricant is required, not only to provide lubrication to the sealing faces, but also to cool the sealing rings.

Fig. 2

HDDF application

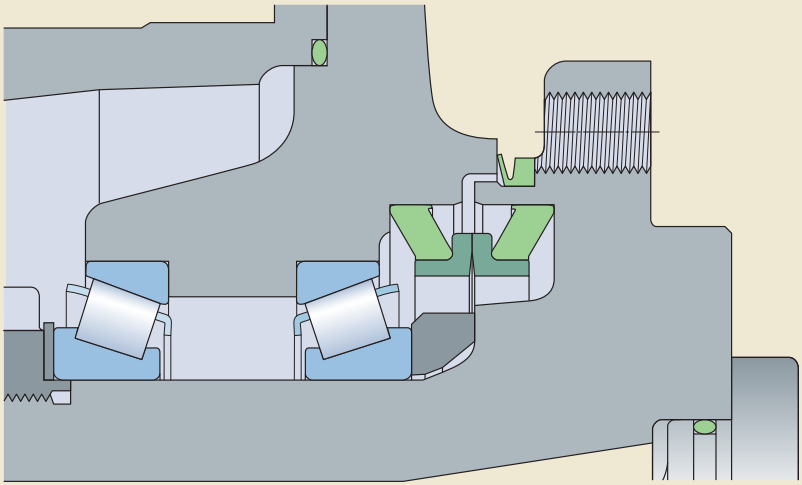

Permissible operating conditions

Depending on their design, metal face seals can withstand different amounts of internal pressure. It should, however, generally be maintained below 0,25 MPa *(35 psi)*. Other recommendations regarding operating conditions for the metal face seals, like temperature and speed, are provided in **table 1**.

The chemical resistance of the nitrile and fluoro rubber in general is dealt with in the section *Chemical resistance* on **page 35**.

Table 1

Permissible operating conditions

Operating condition	Recommended value	
Temperature, max		
Continuous operation		
Nitrile rubber (NBR)	–25 to +100 °C	*(–15 to +210 °F)*
Fluoro rubber (FKM)	–10 to +190 °C	*(15 to 375 °F)*
Circumferential speed, max		
Continuous operation	1,8 m/s	*(350 ft/min)*
Brief periods	3,8 m/s	*(750 ft/min)*
Pressure, max		
Continuous operation	0,25 MPa	*(35 psi)*
Brief periods	0,35 MPa	*(50 psi)*

Contaminants

Metal face seals are often used in heavily contaminated environments, where mud packing in the cavity between the housing, sealing rings and Belleville washers can occur. Eventually, the mud packing can cause the Belleville washers to be pushed out of position, resulting in improper face loads or mud being pumped past the Belleville washers.

Contaminants can also cause abrasion to the Belleville washers, which in turn causes deterioration of the elastomer. To minimize the risk of seal failure due to this deterioriation, it is critical to select a proper Belleville washer material for the application in question.

Installing HDDF seals

General

Careful handling and installation of a metal face seal is critical to avoid cutting or tearing of the elastomeric Belleville washers or breaking the metal sealing rings, both which can cause premature seal failure and immediate leakage. It is also vital to keep the sealing faces free from contaminants like dirt or lint. Always carefully observe installation instructions provided on **page 383**.

Housing and seal preparation

All housing components contacting the Belleville washers must be free from contaminants (oil, grease, dust, lint particles etc.) when installing the seal. SKF recommends using a non-petroleum based solvent and a clean, lint-free wipe to clean these components prior to installation.

All seal parts must be handled with care to avoid damage or scoring.

Installation procedure

1 Install the Belleville washers seated against the inside shoulder of the metal sealing rings (→ **fig. 4a**).
2 Carefully push each seal half (Belleville washer and metal sealing ring) into the housing until it is fully seated. Check that the seal is not cocked and that the washers are seated evenly at the bottom of the housing bore. Improper seal installation can result in uneven face loads around the circumference of the seal faces, causing scoring or the sealing rings to separate and allow oil to leak.
3 Clean both metal sealing ring faces with a lint-free wipe and apply a thin film of oil. Ensure that no oil is applied to any surface but the sealing ring faces (→ **fig. 4b**).
4 Check that both housings are concentric and in correct alignment. The Belleville washers must not unseat from the bottom of the housing.
5 Carefully bring the two housings together, avoiding high impact that can scratch or break the seal components.
6 Finally, hold one half of the assembly stationary while rotating the other half at least ten complete revolutions.

NOTE: This procedure enables the installer to check that the housing and the Belleville washers are aligned. If the seal assembly wobbles, it is necessary to disassemble it and make sure that the Belleville washers are properly seated in the housing.

Fig. 3

Design features

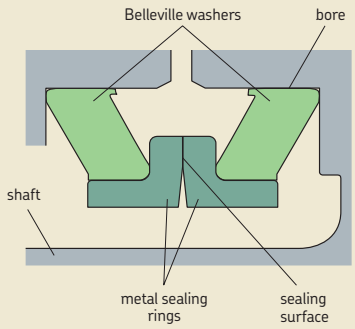

Fig. 4

Installation procedure

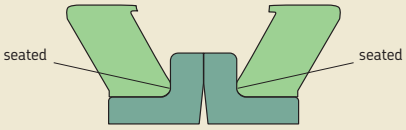

a

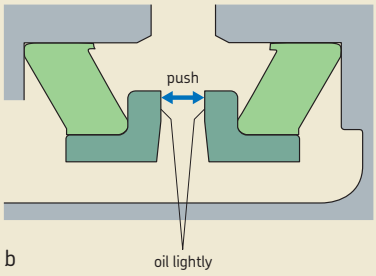

b

Metal face seals – HDDF – inch and metric dimensions

d_1 **1.688 – 7.800** in.
d_1 **42,88 – 198,12** mm

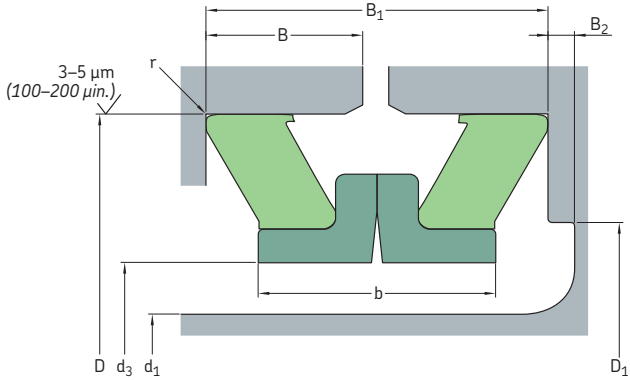

Designation	Lip material	Inch dimensions Shaft diameter d_1 max	Bore diameter D	Operating width B_1	Seal inside diameter d_3 min	Bore depth B	Recommended shoulder diameter D_1 max	min	Undercut B_2 min	Sealing ring width b max	Radius r max
–	–	in.									
16904	R	**1.688**	2.760 ±0.002	0.974 ±0.038	1.760	0.453	2.282	-	-	0.846	0.037
18259	R	**1.812**	3.003 ±0.002	0.892 ±0.031	1.910	0.416	2.475	-	-	0.790	0.042
21215	R	**2.125**	3.250 ±0.002	0.900 ±0.033	2.215	0.418	2.759	-	-	0.812	0.045
25096	R	**2.500**	3.762 ±0.002	0.907 ±0.033	2.580	0.422	3.188	-	-	0.840	0.042
27536	R	**2.750**	4.030 ±0.002	0.918 ±0.035	2.830	0.426	3.480	-	-	0.810	0.042
30651	R	**3.063**	4.500 ±0.002	1.016 ±0.035	3.170	0.475	3.833	-	-	0.912	0.042
35076	R	**3.500**	4.953 ±0.002	1.096 ±0.043	3.620	0.511	4.296	-	-	0.962	0.035
38740	R	**3.875**	5.312 ±0.003	1.102 ±0.024	4.040	0.524	4.750	-	-	1.002	0.042
38751	R	**3.875**	5.562 ±0.003	1.267 ±0.050	4.040	0.594	4.791	-	-	1.110	0.051
43135	R	**4.312**	5.823 ±0.003	1.102 ±0.024	4.420	0.524	5.125	-	-	1.002	0.042
43150	R	**4.312**	6.000 ±0.003	1.320 ±0.040	4.420	0.625	5.173	-	-	1.090	0.051
46975	R	**4.688**	6.400 ±0.003	1.525 ±0.050	4.795	0.722	5.583	-	-	1.254	0.047
50655	R	**5.062**	6.750 ±0.003	1.280 ±0.040	5.170	0.605	5.975	-	-	1.150	0.057
54000	R	**5.400**	6.990 ±0.003	1.310 ±0.030	5.625	0.625	6.625	-	-	1.182	0.057
56170	R	**5.625**	7.250 ±0.003	1.366 ±0.031	5.825	0.650	6.486	6.174	0.032	1.300	0.057
58775	R	**5.875**	7.641 ±0.003	1.510 ±0.031	6.000	0.724	6.868	6.548	0.056	1.490	0.073
63796	R	**6.375**	8.120 ±0.003	1.265 ±0.040	6.570	0.598	7.555	7.505	0.125	1.350	0.042
67560	R	**6.750**	8.620 ±0.004	1.375 ±0.030	6.920	0.656	7.750	-	-	1.260	0.042
74310	R	**7.438**	9.400 ±0.004	1.656 ±0.040	7.540	0.793	8.431	-	-	1.344	0.073
78020	R	**7.800**	10.000 ±0.004	1.750 ±0.050	7.940	0.835	8.910	-	-	1.500	0.058

Designation	Lip material	Metric dimensions Shaft diameter d_1 max	Bore diameter D	Operating width B_1	Seal inside diameter d_3 min	Bore depth B	Recommended shoulder diameter D_1 max	min	Undercut B_2 min	Sealing ring width b max	Radius r max
–	–	mm									
16904	R	**42,88**	70,10 ±0,06	24,74 ±0,97	44,70	11,51	57,96	-	-	21,49	0,94
18259	R	**46,03**	76,28 ±0,06	22,66 ±0,79	48,51	10,57	62,87	-	-	20,07	1,07
21215	R	**53,98**	82,55 ±0,06	22,86 ±0,84	56,26	10,62	70,08	-	-	20,62	1,14
25096	R	**63,50**	95,56 ±0,06	23,04 ±0,84	65,53	10,72	80,98	-	-	21,34	1,07
27536	R	**69,85**	102,36 ±0,06	23,32 ±0,89	71,88	10,82	88,39	-	-	20,57	1,07
30651	R	**77,80**	114,30 ±0,06	25,81 ±0,89	80,52	12,07	97,36	-	-	23,16	1,07
35076	R	**88,90**	125,81 ±0,06	27,84 ±1,09	91,95	12,98	109,12	-	-	24,43	0,89
38740	R	**98,43**	134,92 ±0,08	27,99 ±0,61	102,62	13,31	120,65	-	-	25,45	1,07
38751	R	**98,43**	141,27 ±0,08	32,18 ±1,27	102,62	15,09	121,69	-	-	28,19	1,30
43135	R	**109,52**	147,90 ±0,08	27,99 ±0,61	112,27	13,31	130,18	-	-	25,45	1,07
43150	R	**109,52**	152,40 ±0,08	33,53 ±1,02	112,27	15,88	131,39	-	-	27,69	1,30
46975	R	**119,08**	162,56 ±0,08	38,74 ±1,27	121,79	18,34	141,81	-	-	31,85	1,19
50655	R	**128,57**	171,45 ±0,08	32,51 ±1,02	131,32	15,37	151,77	-	-	29,21	1,45
54000	R	**137,16**	177,55 ±0,08	33,27 ±0,76	142,88	15,88	168,28	-	-	30,02	1,45
56170	R	**142,88**	184,15 ±0,08	34,70 ±0,79	147,96	16,51	164,74	156,82	0,81	33,02	1,45
58775	R	**149,23**	194,08 ±0,08	38,35 ±0,79	152,40	18,39	174,45	166,32	1,42	37,85	1,85
63796	R	**161,93**	206,25 ±0,08	32,13 ±1,02	166,88	15,19	191,90	190,63	3,18	34,29	1,07
67560	R	**171,45**	218,95 ±0,10	34,93 ±0,76	175,77	16,66	196,85	-	-	32,00	1,07
74310	R	**188,93**	238,76 ±0,10	42,06 ±1,02	191,52	20,14	214,15	-	-	34,14	1,85
78020	R	**198,12**	254,00 ±0,10	44,45 ±1,27	201,68	21,21	226,31	-	-	38,10	1,47

Metal face seals – HDDF – inch and metric dimensions
d_1 **8.250 – 29.000** in.
d_1 **209,55 – 736,60** mm

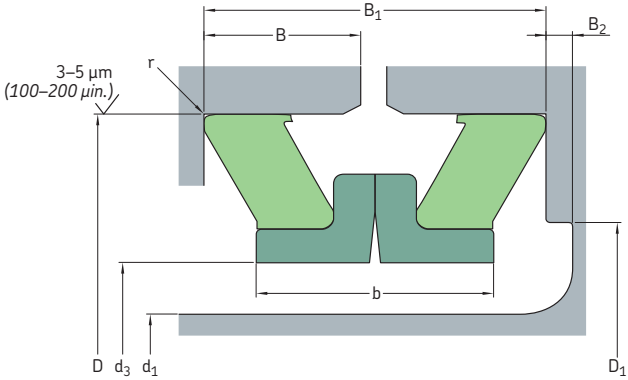

Designation	Lip material	Inch dimensions Shaft diameter d_1 max	Bore diameter D	Operating width B_1	Seal inside diameter d_3 min	Bore depth B	Recommended shoulder diameter D_1 max	min	Undercut B_2 min	Sealing ring width b max	Radius r max
–	–	in.									
82540	R	**8.250**	10.062 ±0.004	1.560 ±0.040	8.358	0.745	9.280	9.220	0.071	1.562	0.058
86850	R	**8.688**	10.911 ±0.005	1.924 ±0.030	8.790	0.932	9.754	-	-	1.642	0.058
93115	R	**9.312**	11.000 ±0.005	1.437 ±0.032	9.410	0.687	10.360	10.260	0.090	1.510	0.050
93125	R	**9.312**	11.625 ±0.005	1.754 ±0.050	9.410	0.837	10.750	-	-	1.510	0.089
95620	R	**9.562**	11.859 ±0.005	1.949 ±0.069	9.660	0.925	10.703	-	-	1.700	0.074
108710	R	**10.875**	12.969 ±0.005	1.540 ±0.050	11.060	0.730	12.100	12.000	0.143	1.670	0.043
116500	R	**11.625**	13.250 ±0.005	1.290 ±0.030	11.780	0.615	12.780	-	-	1.210	0.045
124020	R	**12.400**	14.375 ±0.005	1.656 ±0.050	12.500	0.788	13.530	13.470	0.060	1.610	0.057
137570	R	**13.750**	15.817 ±0.005	1.875 ±0.032	13.910	0.906	14.985	-	-	1.670	0.089
806715	R	**14.750**	16.695 ±0.005	1.875 ±0.032	14.950	0.906	15.863	-	-	1.670	0.062
807115	V	**14.750**	16.695 ±0.005	1.875 ±0.032	14.950	0.906	15.863	-	-	1.670	0.062
171025	R	**17.125**	19.240 ±0.006	1.531 ±0.053	17.280	0.724	18.400	18.300	0.140	1.659	0.043
191022	R	**19.125**	21.500 ±0.006	1.640 ±0.042	19.250	0.784	20.950	20.850	0.175	1.832	0.057
238020	R	**23.875**	26.875 ±0.006	2.125 ±0.040	24.280	1.018	25.550	-	-	1.851	0.089
807199	V	**23.875**	26.875 ±0.006	2.125 ±0.040	24.280	1.018	25.550	-	-	1.851	0.089
807149	V	**29.000**	32.000 ±0.006	2.125 ±0.040	29.512	1.028	30.672	-	-	1.851	0.089

Designation	Lip material	Metric dimensions Shaft diameter d_1 max	Bore diameter D	Operating width B_1	Seal inside diameter d_3 min	Bore depth B	Recommended shoulder diameter D_1 max	min	Undercut B_2 min	Sealing ring width b max	Radius r max
–	–	mm									
82540	R	**209,55**	255,57 ±0,10	39,62 ±1,02	212,29	18,92	235,71	234,19	1,80	39,67	1,47
86850	R	**220,68**	277,14 ±0,13	48,87 ±0,76	223,27	23,67	247,75	-	-	41,71	1,47
93115	R	**236,52**	279,40 ±0,13	36,50 ±0,81	239,01	17,45	263,14	260,60	2,29	38,35	1,27
93125	R	**236,52**	295,28 ±0,13	44,55 ±1,27	239,01	21,26	273,05	-	-	38,35	2,26
95620	R	**242,87**	301,22 ±0,13	49,50 ±1,75	245,36	23,50	271,86	-	-	43,18	1,88
108710	R	**276,23**	329,41 ±0,13	39,12 ±1,27	280,92	18,54	307,34	304,80	3,63	42,42	1,09
116500	R	**295,28**	336,55 ±0,13	32,77 ±0,76	299,21	15,62	324,61	-	-	30,73	1,14
124020	R	**314,96**	365,13 ±0,13	42,06 ±1,27	317,50	20,02	343,66	342,14	1,52	40,89	1,45
137570	R	**349,25**	401,75 ±0,13	47,63 ±0,81	353,31	23,01	380,62	-	-	42,42	2,26
806715	R	**374,65**	424,05 ±0,13	47,63 ±0,81	379,73	23,01	402,92	-	-	42,42	1,58
807115	V	**374,65**	424,05 ±0,13	47,63 ±0,81	379,73	23,01	402,92	-	-	42,42	1,57
171025	R	**434,98**	488,70 ±0,15	38,89 ±1,35	438,91	18,39	467,36	464,82	3,56	42,14	1,09
191022	R	**485,78**	546,10 ±0,15	41,66 ±1,07	488,95	19,91	532,13	529,59	4,45	46,53	1,45
238020	R	**606,43**	682,63 ±0,15	53,98 ±1,02	616,71	25,86	648,97	-	-	47,02	2,26
807199	V	**606,43**	682,63 ±0,15	53,98 ±1,02	616,71	25,86	648,97	-	-	47,02	2,26
807149	V	**736,60**	812,80 ±0,15	53,98 ±1,02	749,60	26,11	779,07	-	-	47,02	2,26



V-ring seals

General **390**

Features **390**

Materials **391**

Standard designs **392**

Main V-ring functions **393**

Other V-ring functions **394**

Sliding velocities **395**

Coaxiality and runout **396**

Misalignment **396**

Counterface **397**
Counterface treatment 397
Additional counterface information 397

Product table sorting order **398**

Shaft requirements **399**

Installing V-rings **399**
7.1 Product table: V-ring seals dimensions, globally valid outside North American market . . 400
7.2 Product table: V-ring seals dimensions, for North American market 432

MVR axial shaft seals **464**
General 464
Advantages and user benefits 464
Design and material 464
Temperature range 464
Sizes 464
Installation 465
7.3 Product table: MVR1 466
7.4 Product table: MVR2 468

V-ring seals

General

V-ring seals (or V-rings) are unique all-rubber seals for rotating shafts and are used in an extremely wide range of applications. The V-ring can be used alone to protect a wide assortment of bearing types from contaminants. They are also often used as secondary seals to protect primary seals in highly contaminated environments.

V-rings are installed on shafts and their thin, tapered lip seals against a counterface perpendicular to the shaft (→ **fig. 1a**). V-rings have an interference fit on the shaft, rotate with it and act as flingers (→ **fig. 1b**). Angular misalignment of the shaft relative to the counterface can be tolerated (→ **fig. 1c**). V-rings provide reliable sealing even if the shaft is out-of-round or rotates eccentrically (→ **fig. 1d**). The amount by which the shaft can be displaced axially is governed by the permissible displacement of the V-ring relative to its counterface.

V-rings are made entirely of elastomers without fabric or metal reinforcement and are therefore easy to install. They can be stretched and, depending on size, pushed over other components like flanges, pulleys or even housings. This is a very valuable feature, especially when replacing a seal.

Features

A V-ring consists of a seal body, a flexible, conical-shaped sealing lip and an integral, resilient "hinge" (→ **fig. 2**). It is stretched and installed directly on the shaft, where it is held in place by the inherent tension of the seal body. It rotates with the shaft and seals axially against a stationary counterface.

The counterface can be the end face of a bearing, a washer, stamping, bearing housing, or even the metal case of a radial shaft seal.

The flexible sealing lip applies contact pressure against the counterface that is relatively

Fig. 1

Installed V-ring seals

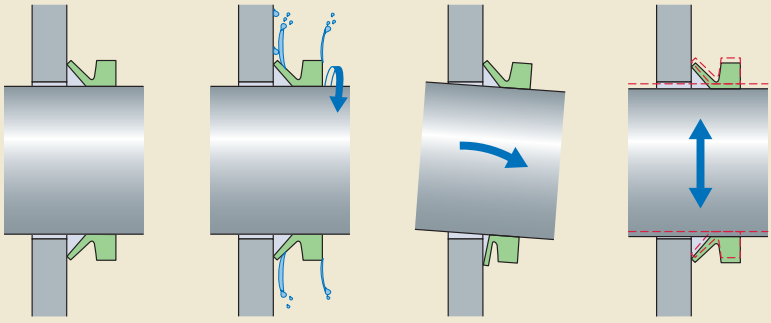

low but sufficient enough to maintain the sealing function. The light contact pressure even enables the seal to run dry in some low-speed applications resulting in insignificant torque drag or heat build-up. The contact pressure varies with the fitted width.

The flexible lip and hinge provide adequate sealing even in applications with considerable end play and shaft misalignment.

As a result of centrifugal force, the contact pressure of the lip decreases as speed increases. This means that friction losses and heat are kept to a minimum, resulting in improved wear resistance and extended service life.

Materials

V-rings are normally made of nitrile rubber that features good chemical resistance, resistance to wear and can be used in applications with temperatures ranging from –40 to +100 °C (*–40 to +210 °F*). For applications with higher temperatures or where aggressive media are present, V-rings made of fluoro rubber can be supplied. The permissible operating conditions for V-rings made of nitrile or fluoro rubber are listed in **table 2** on **page 395**. In the product table under the heading *Lip code*, the letters R and V are used to identify nitrile rubber and fluoro rubber respectively.

WARNING:
At temperatures above 300 °C (*570 °F*), all fluoro rubber compounds give off dangerous fumes. For additional information, refer to **page 32**.

Fig. 2

V-ring design

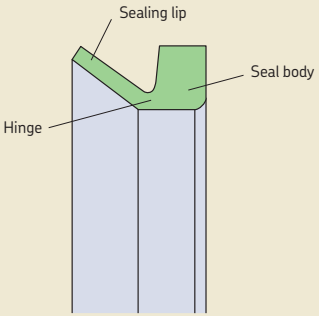

Standard designs

SKF offers five standard V-ring designs:

- VA/VR1, the most common type of V-ring, has a standard cross section and straight back sideface. VA/VR1 is typically used to protect bearing arrangements in gearboxes, electric motors and drives.
- VS/VR2, that has a standard low cross section, tapered back face and wide body, providing a firm hold on the shaft. VS/VR2 is commonly used in agricultural and automotive applications.
- VL/VR3, designed with a very compact axial cross section. VL/VR3 is commonly used in confined spaces to enhance labyrinth seals.
- VE/VR4, designed as secondary seals for heavy-duty applications where the primary seal has to be protected against water and/or solid contaminants. The design has the largest cross section of any V-ring designs and also permits the largest axial displacements. VE/VR4 is available in the diameter range 300 to 2 010 mm *(11.811 to 79.134 in.)*.
- VRME/VR6, a heavy-duty, large diameter V-ring for applications with large axial displacements. VRME/VR6 can be located axially and radially on the shaft using a standard band clamp. VRME/VR6 is primarily designed to protect high-speed bearing arrangements in rolling mills, paper-making and other large machine applications. VRME/VR6 is available on a made-to-order basis.

V-rings from SKF are available for the shaft diameter ranges listed in **table 1**. If the shaft diameter lies in the appropriate range for two V-rings, the larger V-ring, refering to the Seal fitted with, should always be chosen (→ **fig. 9**). In addition, special sizes and designs, including split versions, can be made to order. Contact your SKF sales representative for sizes outside the standard range.

Table 1

Standard V-ring designs and size ranges



Design, globally outside North America Design, North America	VA VR1	VS VR2	VL VR3	VE VR4	VRME VR6
–	mm *(in.)*				
min	2,7 *0.106*	4,5 *0.177*	105 *4.134*	300 *11.811*	300 *11.811*
max	2 020 *79.257*	210 *8.268*	2 025 *79.724*	2 010 *79.134*	1 995 *78.543*

Main V-ring functions

V-rings are suitable for both grease and oil lubricated applications. For sealing grease lubricated bearing arrangements and protecting against contaminants, the V-ring should be arranged outside the housing cover or housing wall. Dust, water spray and other contaminants can be excluded in this position (→ **fig. 3**). The V-ring can also act as a grease valve, where used grease or excess new grease can escape between the counterface and the sealing lip (→ **fig. 4**). The installation of two opposing V-rings can be used in applications where lubricant retention and contaminant exclusion are of equal importance (→ **fig. 5**).

If V-rings are used to retain oil, they should always be located axially on the shaft on the lubricant side (→ **fig. 6**).

V-rings should not be submerged in the application medium.

Fig. 3

V-ring used as an excluder



Fig. 4

V-ring used as a grease valve

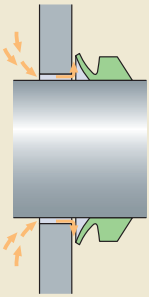

Fig. 5

Two opposing V-rings

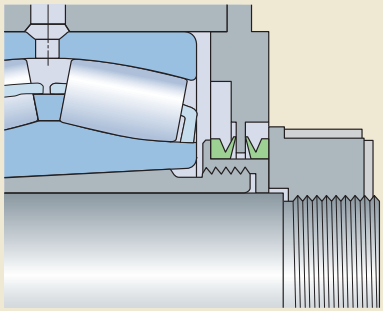

Fig. 6

V-ring located axially

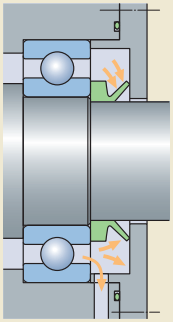

Other V-ring functions

V-rings can also be used as secondary seals (→ **fig. 7**), for example where it is necessary to protect the sealing lip and counterface of the primary seal against contaminants or corrosion and they can be used to enhance the efficiency of labyrinth seals (→ **fig. 8**).

Fig. 7

V-ring used as a secondary seal

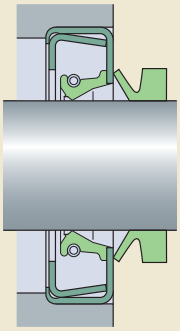

Fig. 8

V-rings in a labyrinth seal

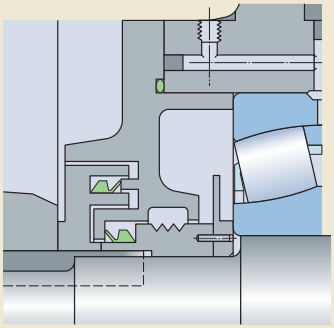

Sliding velocities

V-rings can operate under the conditions listed in **table 2**. In the speed range 15 to 20 m/s *(2 900 to 3 900 ft/min)*, the sealing lip lifts from the counterface and the V-ring only acts as a gap-type seal.

Table 2

Permissible operating conditions

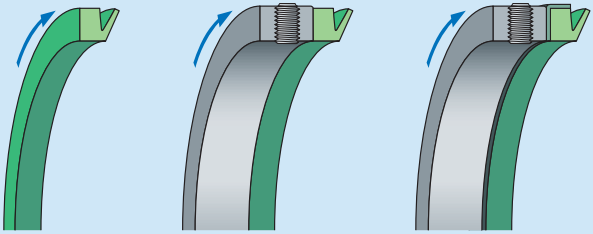

1
normal

2
located axially[1)]

3
axial and radial support[1)]

Operating conditions	**Guideline values for V-rings of** nitrile rubber	fluoro rubber
Temperature, °C *(°F)*	–40 to +100 *(–40 to +210)*	–20 to +150 *(–4 to +300)*
Circumferential speed, m/s *(ft/min)*		
normal (1)	up to 8 *(1 575)*	up to 6,5 *(1 280)*
located axially (2)	8 to 12 *(1 575 to 2 360)*	6,5 to 10 *(1 280 to 1 970)*
axial and radial support (3)	>12 *(2 360)*	>10 *(1 970)*
Pressure acting on seal, MPa *(psi)*		
static sealing or very low speed operation	up to 0,03 *(4.35)*	up to 0,03 *(4.35)*

[1)] Support ring by customer

Coaxiality and runout

The total tolerance for the deviation from coaxiality and runout should not exceed the guideline values provided in **table 3**.

Misalignment

V-rings can tolerate misalignment between the shaft and housing, i.e. deviations from the perpendicularity between the shaft and counterface of the housing. Guideline values for the maximum permissible angular misalignment are provided in **diagram 1**. These values apply to the V-ring designs VA/VR1 and VS/VR2, provided they are supported axially on the shaft.

The permissible misalignment values for the very compact VL/VR3 design are appreciably lower than those for the VA/VR1 and VS/VR2 designs.

In applications where V-rings are not supported axially on the shaft, the maximum value in the diagram should be reduced.

Table 3

Coaxiality and runout tolerances

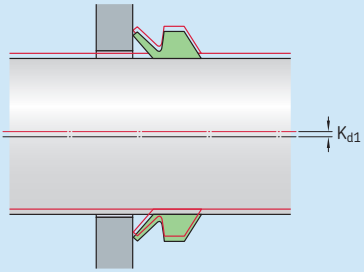

Shaft diameter nominal				**Total tolerance** for coaxiality deviation and runout	
d_1 over	incl.	over	incl.	K_{d_1} max	
mm		*in.*		mm	*in.*
V-rings, VA/VR1 and VS/VR2 designs					
	9,5		*0.374*	0,4	*0.016*
9,5	**19,5**	*0.374*	*0.768*	0,6	*0.024*
19,5	**38**	*0.768*	*1.496*	0,9	*0.034*
38	**68**	*1.496*	*2.677*	1,1	*0.043*
68	**105**	*2.677*	*4.134*	1,4	*0.055*
105	**155**	*4.134*	*6.102*	1,6	*0.063*
155	**210**	*6.102*	*8.628*	1,9	*0.075*
210	**2 020**	*8.628*	*79.527*	3,6	*0.142*
V-rings, VL/VR3 designs					
135	**630**	*5.315*	*24.803*	1,5	*0.059*
V-rings, VE/VR4 designs					
450	**2 010**	*17.716*	*79.134*	6	*0.236*

Counterface

A fine-turned counterface is adequate for V-rings. The appropriate surface roughness values vary depending on the circumferential speed (→ **table 4** on **page 398**). SKF recommends buffing all turned surfaces with an emery cloth to remove any sharp peaks arising from the turning operation. The surface finish should be measured at approximately 90 degrees to the path of the groove to obtain a true reading of the surface.

Counterface treatment

In the presence of grease, oil or dry lubricants, no special counterface treatment is required. Mild steel counterfaces that are exposed to water or other corrosives should be protected, for example by zinc- or chromium-plating or treated with an anti-corrosive spray.

Additional counterface information

Aluminium surfaces should be free of scratch marks. Surface hardness should be > 100 HB in abrasive applications. Die cast aluminium can be used in the as-cast condition.

Steel and cast iron surfaces should be free from lead and sharp tool marks. Cold rolled steel stampings can be used without machining.

Plastic counterface materials are generally not acceptable due to poor heat dissipation.

Stainless steel should not be used in dry-running applications unless the speed is below 1 m/s (*200 ft/min*).

Diagram 1

Maximum permissible misalignment for V-rings of the VA/VR1 and VS/VR2 designs

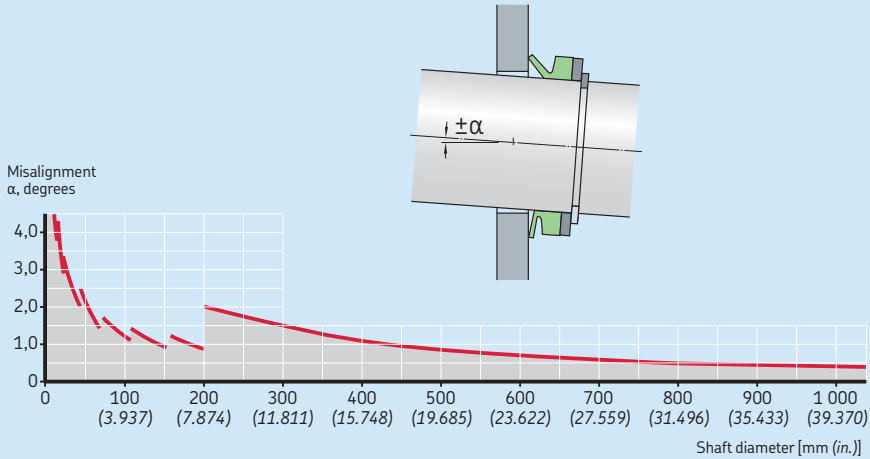

7

Table 4

Recommended counterface surface finish

Circumferential speed		Surface finish	
m/s	*ft/min.*	R_a µm	*R_a µin.*
> 10	*> 1 969*	0,4–0,8	*16–32*
5–10	*984–1 969*	0,8–1,6	*32–64*
1–5	*199–984*	1,6–2,0	*64–80*
< 1	*< 199*	2,0–2,5	*80–100*

The surface finish must not be lower than R_a 0,05 µm *(2 µin.)*.

Product table sorting order

When searching for a suitable V-ring for a given shaft diameter, e.g. 930 mm, first identify the possible shaft diameter ranges (d_1). In this case, there are three possible ranges (→ **fig. 9a**). Then look for the appropriate dimensions D_1, D and B_1 that are listed in ascending order (→ **fig. 9b**). Please note that this sorting order concept results in that the shaft diameter ranges do not always come in ascending order, e.g. here 925–975 mm is listed before 920–965 mm.

Fig. 9

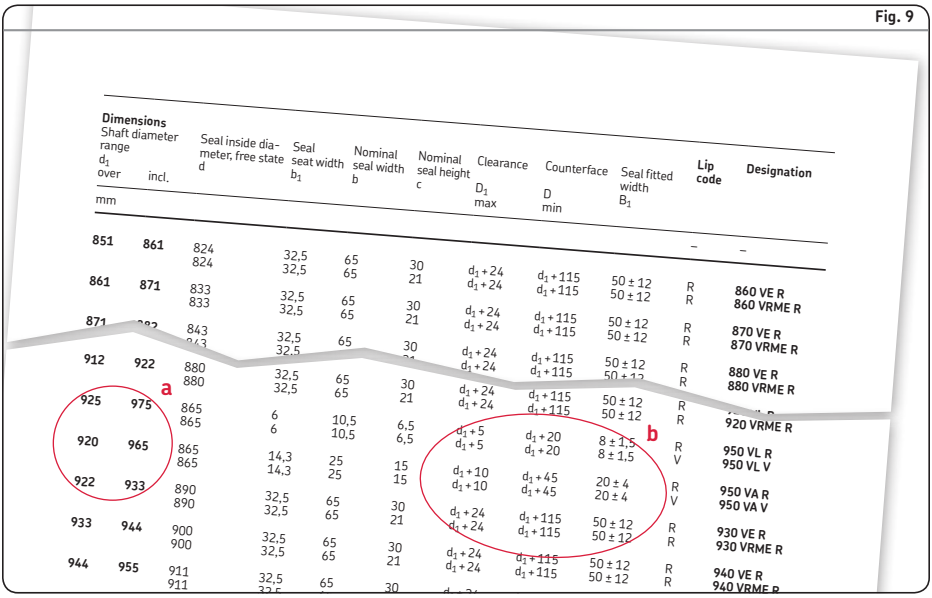

Dimensions Shaft diameter range d_1 over	incl.	Seal inside diameter, free state d	Seal seat width b_1	Nominal seal width b	Nominal seal height c	Clearance D_1 max	Counterface D min	Seal fitted width B_1	Lip code	Designation
mm									–	–
851	861	824	32,5	65	30	$d_1 + 24$	$d_1 + 115$	50 ± 12	R	860 VE R
		824	32,5	65	21	$d_1 + 24$	$d_1 + 115$	50 ± 12	R	860 VRME R
861	871	833	32,5	65	30	$d_1 + 24$	$d_1 + 115$	50 ± 12	R	870 VE R
		833	32,5	65	21	$d_1 + 24$	$d_1 + 115$	50 ± 12	R	870 VRME R
871		843	32,5	65	30	$d_1 + 24$	$d_1 + 115$	50 ± 12	R	880 VE R
912	922	880	32,5	65	30	$d_1 + 24$	$d_1 + 115$	50 ± 12	R	880 VRME R
		880	32,5	65	21	$d_1 + 24$	$d_1 + 115$	50 ± 12	R	
925	975	865	6	10,5	6,5	$d_1 + 5$	$d_1 + 20$	8 ± 1,5	R	920 VRME R
920	965	865	14,3	25	15	$d_1 + 10$	$d_1 + 45$	20 ± 4	V	950 VL R
922	933	890	32,5	65	30	$d_1 + 24$	$d_1 + 115$	50 ± 12	R	950 VL V
933	944	900	32,5	65	30	$d_1 + 24$	$d_1 + 115$	50 ± 12	R	950 VA R
944	955	911	32,5	65	30	$d_1 + 24$	$d_1 + 115$	50 ± 12	R	950 VA V
		911	32,5	65	21	$d_1 + 24$	$d_1 + 115$	50 ± 12	R	930 VE R
										930 VRME R
										940 VE R
										940 VRME R

Shaft requirements

Sharp edges, nicks and burrs on the shaft must be avoided to prevent damage to the V-ring during installation.

V-rings rotate with the shaft and only require a moderate surface roughness value. As a general guideline, the value should not exceed R_a 6,3 µm *(252 µin.)*. When sealing fluids or exposed to fine, solid contaminants, the V-ring requires a surface roughness value of maximum R_a 3,2 µm *(128 µin.)*.

A V-ring is stretched when installed and fits all shaft diameters within the ranges listed in the product tables.

Installing V-rings

V-rings are elastic and can be stretched and pushed over other components, which facilitates the installation (→ **fig. 10**). When several V-rings are to be installed, a simple tool (→ **fig. 11**) can be used to push the seals to their position at a predetermined distance from the counterface. V-rings can also be cut and rejoined in the field.

The general installation guidelines include the following:

- Clean the V-ring, counterface and shaft.
- Make sure that the shaft is dry and free from grease or oil, particularly when installing a V-ring without axial support.
- Lubricate the lip of the V-ring with a thin film of grease or silicone oil.
- In applications where friction must be reduced to a minimum, the counterface should be coated with a low-friction agent. Do not apply grease to the lip.
- Check that the V-ring is installed with a uniform stretch around the shaft.

Fig. 10

Installing a V-ring

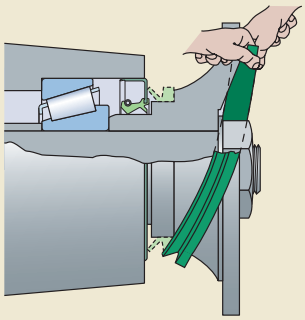

Fig. 11

Installation tool

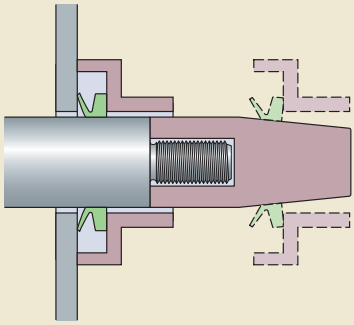

V-ring seals – metric dimensions, globally valid outside North American market

d_1 **2,7 – 53** mm

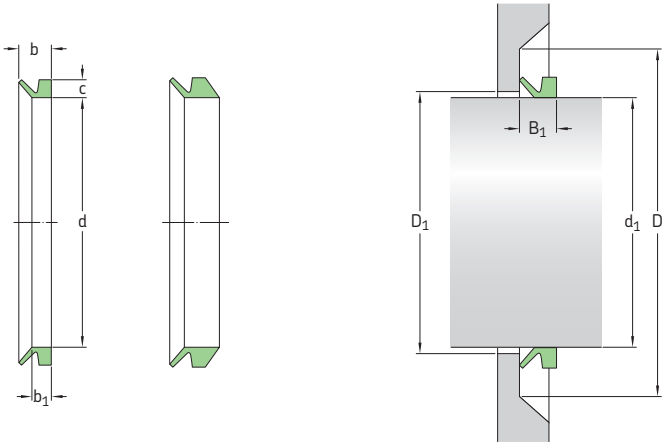

Dimensions Shaft diameter range d_1 over	incl.	Seal inside diameter, free state d	Seal seat width b_1	Nominal seal width b	Nominal seal height c	Clearance D_1 max	Counterface D min	Seal fitted width B_1	Lip code	Designation
mm									–	–
2,7	**3,5**	2,5	2,1	3	1,5	d_1 + 1	d_1 + 4	2,5 ± 0,3	R	**3 VA R**
		2,5	2,1	3	1,5	d_1 + 1	d_1 + 4	2,5 ± 0,3	V	**3 VA V**
3,5	**4,5**	3,2	2,4	3,7	2	d_1 + 1	d_1 + 6	3 ± 0,4	R	**4 VA R**
		3,2	2,4	3,7	2	d_1 + 1	d_1 + 6	3 ± 0,4	V	**4 VA V**
4,5	**5,5**	4	2,4	3,7	2	d_1 + 1	d_1 + 6	3 ± 0,4	R	**5 VA R**
		4	2,4	3,7	2	d_1 + 1	d_1 + 6	3 ± 0,4	V	**5 VA V**
		4	3,9	5,2	2	d_1 + 1	d_1 + 6	4,5 ± 0,4	R	**5 VS R**
		4	3,9	5,2	2	d_1 + 1	d_1 + 6	4,5 ± 0,4	V	**5 VS V**
5,5	**6,5**	5	2,4	3,7	2	d_1 + 1	d_1 + 6	3 ± 0,4	R	**6 VA R**
		5	2,4	3,7	2	d_1 + 1	d_1 + 6	3 ± 0,4	V	**6 VA V**
		5	3,9	5,2	2	d_1 + 1	d_1 + 6	4,5 ± 0,4	R	**6 VS R**
		5	3,9	5,2	2	d_1 + 1	d_1 + 6	4,5 ± 0,4	V	**6 VS V**
6,5	**8**	6	2,4	3,7	2	d_1 + 1	d_1 + 6	3 ± 0,4	R	**7 VA R**
		6	2,4	3,7	2	d_1 + 1	d_1 + 6	3 ± 0,4	V	**7 VA V**
		6	3,9	5,2	2	d_1 + 1	d_1 + 6	4,5 ± 0,4	R	**7 VS R**
		6	3,9	5,2	2	d_1 + 1	d_1 + 6	4,5 ± 0,4	V	**7 VS V**
8	**9,5**	7	2,4	3,7	2	d_1 + 1	d_1 + 6	3 ± 0,4	R	**8 VA R**
		7	2,4	3,7	2	d_1 + 1	d_1 + 6	3 ± 0,4	V	**8 VA V**
		7	3,9	5,2	2	d_1 + 1	d_1 + 6	4,5 ± 0,4	R	**8 VS R**
		7	3,9	5,2	2	d_1 + 1	d_1 + 6	4,5 ± 0,4	V	**8 VS V**
9,5	**11,5**	9	3,4	5,5	3	d_1 + 1	d_1 + 9	4,5 ± 0,6	R	**10 VA R**
		9	3,4	5,5	3	d_1 + 1	d_1 + 9	4,5 ± 0,6	V	**10 VA V**
		9	5,6	7,7	3	d_1 + 1	d_1 + 9	6,7 ± 0,6	R	**10 VS R**
		9	5,6	7,7	3	d_1 + 1	d_1 + 9	6,7 ± 0,6	V	**10 VS V**
11,5	**12,5**	10,5	3,4	5,5	3	d_1 + 1	d_1 + 9	4,5 ± 0,6	R	**12 VA R**
		10,5	3,4	5,5	3	d_1 + 1	d_1 + 9	4,5 ± 0,6	V	**12 VA V**
11,5	**13,5**	10,5	5,6	7,7	3	d_1 + 1	d_1 + 9	6,7 ± 0,6	R	**12 VS R**
		10,5	5,6	7,7	3	d_1 + 1	d_1 + 9	6,7 ± 0,6	V	**12 VS V**
		11,7	3,4	5,5	3	d_1 + 1	d_1 + 9	4,5 ± 0,6	R	**13 VA R**
		11,7	3,4	5,5	3	d_1 + 1	d_1 + 9	4,5 ± 0,6	V	**13 VA V**
13,5	**15,5**	12,5	3,4	5,5	3	d_1 + 1	d_1 + 9	4,5 ± 0,6	R	**14 VA R**
		12,5	3,4	5,5	3	d_1 + 1	d_1 + 9	4,5 ± 0,6	V	**14 VA V**

Dimensions									Lip code	Designation
Shaft diameter range		Seal inside diameter, free state	Seal seat width	Nominal seal width	Nominal seal height	Clearance	Counterface	Seal fitted width		
d_1		d	b_1	b	c	D_1	D	B_1		
over	incl.					max	min			
mm									–	–
13,5	**15,5**	12,5	5,6	7,7	3	d_1 + 1	d1 + 9	6,7 ± 0,6	R	**14 VS R**
cont.		12,5	5,6	7,7	3	d_1 + 1	d1 + 9	6,7 ± 0,6	V	**14 VS V**
15,5	**17**	14	3,4	5,5	3	d_1 + 1	d1 + 9	4,5 ± 0,6	R	**16 VA R**
		14	3,4	5,5	3	d_1 + 1	d1 + 9	4,5 ± 0,6	V	**16 VA V**
15,5	**17,5**	14	5,6	7,7	3	d_1 + 1	d_1 + 9	6,7 ± 0,6	R	**16 VS R**
		14	5,6	7,7	3	d_1 + 1	d_1 + 9	6,7 ± 0,6	V	**16 VS V**
17,5	**19**	16	3,4	5,5	3	d_1 + 1	d_1 + 9	4,5 ± 0,6	R	**18 VA R**
		16	3,4	5,5	3	d_1 + 1	d_1 + 9	4,5 ± 0,6	V	**18 VA V**
		16	5,6	7,7	3	d_1 + 1	d_1 + 9	6,7 ± 0,6	R	**18 VS R**
		16	5,6	7,7	3	d_1 + 1	d_1 + 9	6,7 ± 0,6	V	**18 VS V**
19	**21**	18	4,7	7,5	4	d_1 + 2	d_1 + 12	6 ± 0,8	R	**20 VA R**
		18	4,7	7,5	4	d_1 + 2	d_1 + 12	6 ± 0,8	V	**20 VA V**
		18	7,9	10,5	4	d_1 + 2	d_1 + 12	9 ± 0,8	R	**20 VS R**
		18	7,9	10,5	4	d_1 + 2	d_1 + 12	9 ± 0,8	V	**20 VS V**
21	**24**	20	4,7	7,5	4	d_1 + 2	d_1 + 12	6 ± 0,8	R	**22 VA R**
		20	4,7	7,5	4	d_1 + 2	d_1 + 12	6 ± 0,8	V	**22 VA V**
		20	7,9	10,5	4	d_1 + 2	d_1 + 12	9 ± 0,8	R	**22 VS R**
		20	7,9	10,5	4	d_1 + 2	d_1 + 12	9 ± 0,8	V	**22 VS V**
24	**27**	22	4,7	7,5	4	d_1 + 2	d_1 + 12	6 ± 0,8	R	**25 VA R**
		22	4,7	7,5	4	d_1 + 2	d_1 + 12	6 ± 0,8	V	**25 VA V**
		22	7,9	10,5	4	d_1 + 2	d_1 + 12	9 ± 0,8	R	**25 VS R**
		22	7,9	10,5	4	d_1 + 2	d_1 + 12	9 ± 0,8	V	**25 VS V**
27	**29**	25	4,7	7,5	4	d_1 + 2	d_1 + 12	6 ± 0,8	R	**28 VA R**
		25	4,7	7,5	4	d_1 + 2	d_1 + 12	6 ± 0,8	V	**28 VA V**
		25	7,9	10,5	4	d_1 + 2	d_1 + 12	9 ± 0,8	R	**28 VS R**
		25	7,9	10,5	4	d_1 + 2	d_1 + 12	9 ± 0,8	V	**28 VS V**
29	**31**	27	4,7	7,5	4	d_1 + 2	d_1 + 12	6 ± 0,8	R	**30 VA R**
		27	4,7	7,5	4	d_1 + 2	d_1 + 12	6 ± 0,8	V	**30 VA V**
		27	7,9	10,5	4	d_1 + 2	d_1 + 12	9 ± 0,8	R	**30 VS R**
		27	7,9	10,5	4	d_1 + 2	d_1 + 12	9 ± 0,8	V	**30 VS V**
31	**33**	29	4,7	7,5	4	d_1 + 2	d_1 + 12	6 ± 0,8	R	**32 VA R**
		29	4,7	7,5	4	d_1 + 2	d_1 + 12	6 ± 0,8	V	**32 VA V**
		29	7,9	10,5	4	d_1 + 2	d_1 + 12	9 ± 0,8	R	**32 VS R**
		29	7,9	10,5	4	d_1 + 2	d_1 + 12	9 ± 0,8	V	**32 VS V**
33	**36**	31	4,7	7,5	4	d_1 + 2	d_1 + 12	6 ± 0,8	R	**35 VA R**
		31	4,7	7,5	4	d_1 + 2	d_1 + 12	6 ± 0,8	V	**35 VA V**
		31	7,9	10,5	4	d_1 + 2	d_1 + 12	9 ± 0,8	R	**35 VS R**
		31	7,9	10,5	4	d_1 + 2	d_1 + 12	9 ± 0,8	V	**35 VS V**
36	**38**	34	4,7	7,5	4	d_1 + 2	d_1 + 12	6 ± 0,8	R	**38 VA R**
		34	4,7	7,5	4	d_1 + 2	d_1 + 12	6 ± 0,8	V	**38 VA V**
		34	7,9	10,5	4	d_1 + 2	d_1 + 12	9 ± 0,8	R	**38 VS R**
		34	7,9	10,5	4	d_1 + 2	d_1 + 12	9 ± 0,8	V	**38 VS V**
38	**43**	36	5,5	9	5	d_1 + 2	d_1 + 15	7 ± 1	R	**40 VA R**
		36	5,5	9	5	d_1 + 2	d_1 + 15	7 ± 1	V	**40 VA V**
		36	9,5	13	5	d_1 + 2	d_1 + 15	11 ± 1	R	**40 VS R**
		36	9,5	13	5	d_1 + 2	d_1 + 15	11 ± 1	V	**40 VS V**
43	**48**	40	5,5	9	5	d_1 + 2	d_1 + 15	7 ± 1	R	**45 VA R**
		40	5,5	9	5	d_1 + 2	d_1 + 15	7 ± 1	V	**45 VA V**
		40	9,5	13	5	d_1 + 2	d_1 + 15	11 ± 1	R	**45 VS R**
		40	9,5	13	5	d_1 + 2	d_1 + 15	11 ± 1	V	**45 VS V**
48	**53**	45	5,5	9	5	d_1 + 2	d_1 + 15	7 ± 1	R	**50 VA R**
		45	5,5	9	5	d_1 + 2	d_1 + 15	7 ± 1	V	**50 VA V**
		45	9,5	13	5	d_1 + 2	d_1 + 15	11 ± 1	R	**50 VS R**
		45	9,5	13	5	d_1 + 2	d_1 + 15	11 ± 1	V	**50 VS V**

V-ring seals – metric dimensions, globally valid outside North American market

d_1 **53 – 195** mm

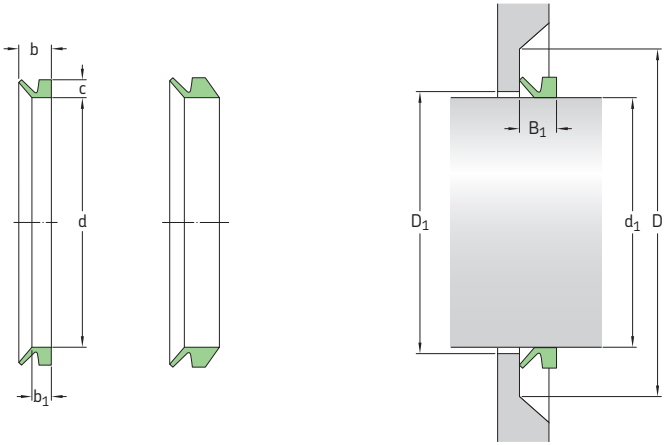

Dimensions Shaft diameter range d_1 over	incl.	Seal inside diameter, free state d	Seal seat width b_1	Nominal seal width b	Nominal seal height c	Clearance D_1 max	Counterface D min	Seal fitted width B_1	Lip code	Designation
mm									–	–
53	**58**	49	5,5	9	5	d_1 + 2	d_1 + 15	7 ± 1	R	**55 VA R**
		49	5,5	9	5	d_1 + 2	d_1 + 15	7 ± 1	V	**55 VA V**
		49	9,5	13	5	d_1 + 2	d_1 + 15	11 ± 1	R	**55 VS R**
		49	9,5	13	5	d_1 + 2	d_1 + 15	11 ± 1	V	**55 VS V**
58	**63**	54	5,5	9	5	d_1 + 2	d_1 + 15	7 ± 1	R	**60 VA R**
		54	5,5	9	5	d_1 + 2	d_1 + 15	7 ± 1	V	**60 VA V**
		54	9,5	13	5	d_1 + 2	d_1 + 15	11 ± 1	R	**60 VS R**
		54	9,5	13	5	d_1 + 2	d_1 + 15	11 ± 1	V	**60 VS V**
63	**68**	58	5,5	9	5	d_1 + 2	d_1 + 15	7 ± 1	R	**65 VA R**
		58	5,5	9	5	d_1 + 2	d_1 + 15	7 ± 1	V	**65 VA V**
		58	9,5	13	5	d_1 + 2	d_1 + 15	11 ± 1	R	**65 VS R**
		58	9,5	13	5	d_1 + 2	d_1 + 15	11 ± 1	V	**65 VS V**
68	**73**	63	6,8	11	6	d_1 + 3	d_1 + 18	9 ± 1,2	R	**70 VA R**
		63	6,8	11	6	d_1 + 3	d_1 + 18	9 ± 1,2	V	**70 VA V**
		63	11,3	15,5	6	d_1 + 3	d_1 + 18	13,5 ± 1,2	R	**70 VS R**
		63	11,3	15,5	6	d_1 + 3	d_1 + 18	13,5 ± 1,2	V	**70 VS V**
73	**78**	67	6,8	11	6	d_1 + 3	d_1 + 18	9 ± 1,2	R	**75 VA R**
		67	6,8	11	6	d_1 + 3	d_1 + 18	13,5 ± 1,2	R	**75 VS R**
		67	11,3	15,5	6	d_1 + 3	d_1 + 18	13,5 ± 1,2	V	**75 VS V**
78	**83**	72	6,8	11	6	d_1 + 3	d_1 + 18	9 ± 1,2	R	**80 VA R**
		72	6,8	11	6	d_1 + 3	d_1 + 18	9 ± 1,2	V	**80 VA V**
		72	11,3	15,5	6	d_1 + 3	d_1 + 18	13,5 ± 1,2	R	**80 VS R**
		72	11,3	15,5	6	d_1 + 3	d_1 + 18	13,5 ± 1,2	V	**80 VS V**
83	**88**	76	6,8	11	6	d_1 + 3	d_1 + 18	9 ± 1,2	R	**85 VA R**
		76	6,8	11	6	d_1 + 3	d_1 + 18	9 ± 1,2	V	**85 VA V**
		76	11,3	15,5	6	d_1 + 3	d_1 + 18	13,5 ± 1,2	R	**85 VS R**
		76	11,3	15,5	6	d_1 + 3	d_1 + 18	13,5 ± 1,2	V	**85 VS V**
88	**93**	81	6,8	11	6	d_1 + 3	d_1 + 18	9 ± 1,2	R	**90 VA R**
		81	6,8	11	6	d_1 + 3	d_1 + 18	9 ± 1,2	V	**90 VA V**
		81	11,3	15,5	6	d_1 + 3	d_1 + 18	13,5 ± 1,2	R	**90 VS R**
		81	11,3	15,5	6	d_1 + 3	d_1 + 18	13,5 ± 1,2	V	**90 VS V**
93	**98**	85	6,8	11	6	d_1 + 3	d_1 + 18	9 ± 1,2	R	**95 VA R**
		85	6,8	11	6	d_1 + 3	d_1 + 18	9 ± 1,2	V	**95 VA V**
		85	11,3	15,5	6	d_1 + 3	d_1 + 18	13,5 ± 1,2	R	**95 VS R**
		85	11,3	15,5	6	d_1 + 3	d_1 + 18	13,5 ± 1,2	V	**95 VS V**

Dimensions									Lip code	Designation
Shaft diameter range		Seal inside diameter, free state	Seal seat width	Nominal seal width	Nominal seal height	Clearance	Counterface	Seal fitted width		
d_1		d	b_1	b	c	D_1	D	B_1		
over	incl.					max	min			
mm									–	–
98	**105**	90	6,8	11	6	$d_1 + 3$	$d_1 + 18$	9 ± 1,2	R	**100 VA R**
		90	6,8	11	6	$d_1 + 3$	$d_1 + 18$	9 ± 1,2	V	**100 VA V**
		90	11,3	15,5	6	$d_1 + 3$	$d_1 + 18$	13,5 ± 1,2	R	**100 VS R**
		90	11,3	15,5	6	$d_1 + 3$	$d_1 + 18$	13,5 ± 1,2	V	**100 VS V**
105	**115**	99	6	10,5	6,5	$d_1 + 5$	$d_1 + 20$	8 ± 1,5	R	**110 VL R**
		99	6	10,5	6,5	$d_1 + 5$	$d_1 + 20$	8 ± 1,5	V	**110 VL V**
		99	7,9	12,8	7	$d_1 + 4$	$d_1 + 21$	10,5 ± 1,5	R	**110 VA R**
		99	7,9	12,8	7	$d_1 + 4$	$d_1 + 21$	10,5 ± 1,5	V	**110 VA V**
		99	13,1	18	7	$d_1 + 4$	$d_1 + 21$	15,5 ± 1,5	R	**110 VS R**
		99	13,1	18	7	$d_1 + 4$	$d_1 + 21$	15,5 ± 1,5	V	**110 VS V**
115	**125**	108	6	10,5	6,5	$d_1 + 5$	$d_1 + 20$	8 ± 1,5	R	**120 VL R**
		108	6	10,5	6,5	$d_1 + 5$	$d_1 + 20$	8 ± 1,5	V	**120 VL V**
		108	7,9	12,8	7	$d_1 + 4$	$d_1 + 21$	10,5 ± 1,5	R	**120 VA R**
		108	7,9	12,8	7	$d_1 + 4$	$d_1 + 21$	10,5 ± 1,5	V	**120 VA V**
		108	13,1	18	7	$d_1 + 4$	$d_1 + 21$	15,5 ± 1,5	R	**120 VS R**
		108	13,1	18	7	$d_1 + 4$	$d_1 + 21$	15,5 ± 1,5	V	**120 VS V**
125	**135**	117	6	10,5	6,5	$d_1 + 5$	$d_1 + 20$	8 ± 1,5	R	**130 VL R**
		117	6	10,5	6,5	$d_1 + 5$	$d_1 + 20$	8 ± 1,5	V	**130 VL V**
		117	7,9	12,8	7	$d_1 + 4$	$d_1 + 21$	10,5 ± 1,5	R	**130 VA R**
		117	7,9	12,8	7	$d_1 + 4$	$d_1 + 21$	10,5 ± 1,5	V	**130 VA V**
		117	13,1	18	7	$d_1 + 4$	$d_1 + 21$	15,5 ± 1,5	R	**130 VS R**
		117	13,1	18	7	$d_1 + 4$	$d_1 + 21$	15,5 ± 1,5	V	**130 VS V**
135	**145**	126	6	10,5	6,5	$d_1 + 5$	$d_1 + 20$	8 ± 1,5	R	**140 VL R**
		126	6	10,5	6,5	$d_1 + 5$	$d_1 + 20$	8 ± 1,5	V	**140 VL V**
		126	7,9	12,8	7	$d_1 + 4$	$d_1 + 21$	10,5 ± 1,5	R	**140 VA R**
		126	7,9	12,8	7	$d_1 + 4$	$d_1 + 21$	10,5 ± 1,5	V	**140 VA V**
		126	13,1	18	7	$d_1 + 4$	$d_1 + 21$	15,5 ± 1,5	R	**140 VS R**
		126	13,1	18	7	$d_1 + 4$	$d_1 + 21$	15,5 ± 1,5	V	**140 VS V**
145	**155**	135	6	10,5	6,5	$d_1 + 5$	$d_1 + 20$	8 ± 1,5	R	**150 VL R**
		135	6	10,5	6,5	$d_1 + 5$	$d_1 + 20$	8 ± 1,5	V	**150 VL V**
		135	7,9	12,8	7	$d_1 + 4$	$d_1 + 21$	10,5 ± 1,5	R	**150 VA R**
		135	7,9	12,8	7	$d_1 + 4$	$d_1 + 21$	10,5 ± 1,5	V	**150 VA V**
		135	13,1	18	7	$d_1 + 4$	$d_1 + 21$	15,5 ± 1,5	R	**150 VS R**
		135	13,1	18	7	$d_1 + 4$	$d_1 + 21$	15,5 ± 1,5	V	**150 VS V**
155	**165**	144	6	10,5	6,5	$d_1 + 5$	$d_1 + 20$	8 ± 1,5	R	**160 VL R**
		144	6	10,5	6,5	$d_1 + 5$	$d_1 + 20$	8 ± 1,5	V	**160 VL V**
		144	9	14,5	8	$d_1 + 4$	$d_1 + 24$	12 ± 1,8	R	**160 VA R**
		144	9	14,5	8	$d_1 + 4$	$d_1 + 24$	12 ± 1,8	V	**160 VA V**
		144	15	20,5	8	$d_1 + 4$	$d_1 + 24$	18 ± 1,8	R	**160 VS R**
		144	15	20,5	8	$d_1 + 4$	$d_1 + 24$	18 ± 1,8	V	**160 VS V**
165	**175**	153	6	10,5	6,5	$d_1 + 5$	$d_1 + 20$	8 ± 1,5	R	**170 VL R**
		153	6	10,5	6,5	$d_1 + 5$	$d_1 + 20$	8 ± 1,5	V	**170 VL V**
		153	9	14,5	8	$d_1 + 4$	$d_1 + 24$	12 ± 1,8	R	**170 VA R**
		153	9	14,5	8	$d_1 + 4$	$d_1 + 24$	12 ± 1,8	V	**170 VA V**
		153	15	20,5	8	$d_1 + 4$	$d_1 + 24$	18 ± 1,8	R	**170 VS R**
		153	15	20,5	8	$d_1 + 4$	$d_1 + 24$	18 ± 1,8	V	**170 VS V**
175	**185**	162	6	10,5	6,5	$d_1 + 5$	$d_1 + 20$	8 ± 1,5	R	**180 VL R**
		162	6	10,5	6,5	$d_1 + 5$	$d_1 + 20$	8 ± 1,5	V	**180 VL V**
		162	9	14,5	8	$d_1 + 4$	$d_1 + 24$	12 ± 1,8	R	**180 VA R**
		162	9	14,5	8	$d_1 + 4$	$d_1 + 24$	12 ± 1,8	V	**180 VA V**
		162	15	20,5	8	$d_1 + 4$	$d_1 + 24$	18 ± 1,8	R	**180 VS R**
		162	15	20,5	8	$d_1 + 4$	$d_1 + 24$	18 ± 1,8	V	**180 VS V**
185	**195**	171	6	10,5	6,5	$d_1 + 5$	$d_1 + 20$	8 ± 1,5	R	**190 VL R**
		171	6	10,5	6,5	$d_1 + 5$	$d_1 + 20$	8 ± 1,5	V	**190 VL V**
		171	9	14,5	8	$d_1 + 4$	$d_1 + 24$	12 ± 1,8	R	**190 VA R**
		171	9	14,5	8	$d_1 + 4$	$d_1 + 24$	12 ± 1,8	V	**190 VA V**
		171	15	20,5	8	$d_1 + 4$	$d_1 + 24$	18 ± 1,8	R	**190 VS R**
		171	15	20,5	8	$d_1 + 4$	$d_1 + 24$	18 ± 1,8	V	**190 VS V**

V-ring seals – metric dimensions, globally valid outside North American market

d_1 **190 – 395** mm

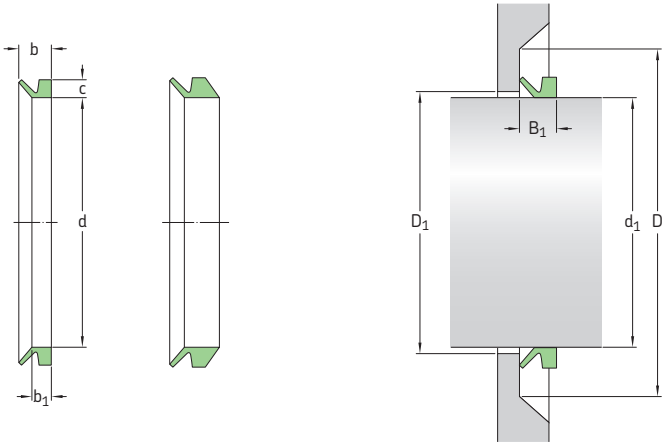

Dimensions Shaft diameter range d_1 over	incl.	Seal inside diameter, free state d	Seal seat width b_1	Nominal seal width b	Nominal seal height c	Clearance D_1 max	Counterface D min	Seal fitted width B_1	Lip code	Designation
mm									–	–
195	**210**	182	6	10,5	6,5	d_1 + 5	d_1 + 20	8 ± 1,5	R	**200 VL R**
		182	6	10,5	6,5	d_1 + 5	d_1 + 20	8 ± 1,5	V	**200 VL V**
		180	9	14,5	8	d_1 + 4	d_1 + 24	12 ± 1,8	R	**199 VA R**
		180	9	14,5	8	d_1 + 4	d_1 + 24	12 ± 1,8	V	**199 VA V**
		180	15	20,5	8	d_1 + 4	d_1 + 24	18 ± 1,8	R	**199 VS R**
		180	15	20,5	8	d_1 + 4	d_1 + 24	18 ± 1,8	V	**199 VS V**
190	**210**	180	14,3	25	15	d_1 + 10	d_1 + 45	20 ± 4	R	**200 VA R**
		180	14,3	25	15	d_1 + 10	d_1 + 45	20 ± 4	V	**200 VA V**
210	**233**	198	6	10,5	6,5	d_1 + 5	d_1 + 20	8 ± 1,5	R	**220 VL R**
		198	6	10,5	6,5	d_1 + 5	d_1 + 20	8 ± 1,5	V	**220 VL V**
		198	14,3	25	15	d_1 + 10	d_1 + 45	20 ± 4	R	**220 VA R**
		198	14,3	25	15	d_1 + 10	d_1 + 45	20 ± 4	V	**220 VA V**
233	**260**	225	6	10,5	6,5	d_1 + 5	d_1 + 20	8 ± 1,5	R	**250 VL R**
		225	6	10,5	6,5	d_1 + 5	d_1 + 20	8 ± 1,5	V	**250 VL V**
235	**265**	225	14,3	25	15	d_1 + 10	d_1 + 45	20 ± 4	R	**250 VA R**
		225	14,3	25	15	d_1 + 10	d_1 + 45	20 ± 4	V	**250 VA V**
260	**285**	247	6	10,5	6,5	d_1 + 5	d_1 + 20	8 ± 1,5	R	**275 VL R**
		247	6	10,5	6,5	d_1 + 5	d_1 + 20	8 ± 1,5	V	**275 VL V**
265	**290**	247	14,3	25	15	d_1 + 10	d_1 + 45	20 ± 4	R	**275 VA R**
		247	14,3	25	15	d_1 + 10	d_1 + 45	20 ± 4	V	**275 VA V**
285	**310**	270	6	10,5	6,5	d_1 + 5	d_1 + 20	8 ± 1,5	R	**300 VL R**
		270	6	10,5	6,5	d_1 + 5	d_1 + 20	8 ± 1,5	V	**300 VL V**
290	**310**	270	14,3	25	15	d_1 + 10	d_1 + 45	20 ± 4	R	**300 VA R**
		270	14,3	25	15	d_1 + 10	d_1 + 45	20 ± 4	V	**300 VA V**
300	**305**	294	32,5	65	30	d_1 + 24	d_1 + 115	50 ± 12	R	**300 VE R**
		294	32,5	65	21	d_1 + 24	d_1 + 115	50 ± 12	R	**300 VRME R**
305	**310**	299	32,5	65	30	d_1 + 24	d_1 + 115	50 ± 12	R	**305 VE R**
		299	32,5	65	21	d_1 + 24	d_1 + 115	50 ± 12	R	**305 VRME R**
310	**335**	292	6	10,5	6,5	d_1 + 5	d_1 + 20	8 ± 1,5	R	**325 VL R**
		292	6	10,5	6,5	d_1 + 5	d_1 + 20	8 ± 1,5	V	**325 VL V**

Dimensions									Lip code	Designation
Shaft diameter range		Seal inside diameter, free state	Seal seat width	Nominal seal width	Nominal seal height	Clearance	Counterface	Seal fitted width		
d_1		d	b_1	b	c	D_1	D	B_1		
over	incl.					max	min			
mm									–	–
310	**335**	292	14,3	25	15	d_1 + 10	d_1 + 45	20 ± 4	R	**325 VA R**
cont.		292	14,3	25	15	d_1 + 10	d_1 + 45	20 ± 4	V	**325 VA V**
310	**315**	304	32,5	65	30	d_1 + 24	d_1 + 115	50 ± 12	R	**310 VE R**
		304	32,5	65	21	d_1 + 24	d_1 + 115	50 ± 12	R	**310 VRME R**
315	**320**	309	32,5	65	30	d_1 + 24	d_1 + 115	50 ± 12	R	**315 VE R**
		309	32,5	65	21	d_1 + 24	d_1 + 115	50 ± 12	R	**315 VRME R**
320	**325**	314	32,5	65	30	d_1 + 24	d_1 + 115	50 ± 12	R	**320 VE R**
		314	32,5	65	21	d_1 + 24	d_1 + 115	50 ± 12	R	**320 VRME R**
325	**330**	319	32,5	65	30	d_1 + 24	d_1 + 115	50 ± 12	R	**325 VE R**
		319	32,5	65	21	d_1 + 24	d_1 + 115	50 ± 12	R	**325 VRME R**
330	**335**	323	32,5	65	30	d_1 + 24	d_1 + 115	50 ± 12	R	**330 VE R**
		323	32,5	65	21	d_1 + 24	d_1 + 115	50 ± 12	R	**330 VRME R**
335	**365**	315	6	10,5	6,5	d_1 + 5	d_1 + 20	8 ± 1,5	R	**350 VL R**
		315	6	10,5	6,5	d_1 + 5	d_1 + 20	8 ± 1,5	V	**350 VL V**
		315	14,3	25	15	d_1 + 10	d_1 + 45	20 ± 4	R	**350 VA R**
		315	14,3	25	15	d_1 + 10	d_1 + 45	20 ± 4	V	**350 VA V**
335	**340**	328	32,5	65	30	d_1 + 24	d_1 + 115	50 ± 12	R	**335 VE R**
		328	32,5	65	21	d_1 + 24	d_1 + 115	50 ± 12	R	**335 VRME R**
340	**345**	333	32,5	65	30	d_1 + 24	d_1 + 115	50 ± 12	R	**340 VE R**
		328	32,5	65	21	d_1 + 24	d_1 + 115	50 ± 12	R	**340 VRME R**
345	**350**	338	32,5	65	30	d_1 + 24	d_1 + 115	50 ± 12	R	**345 VE R**
		338	32,5	65	21	d_1 + 24	d_1 + 115	50 ± 12	R	**345 VRME R**
350	**355**	343	32,5	65	30	d_1 + 24	d_1 + 115	50 ± 12	R	**350 VE R**
		343	32,5	65	21	d_1 + 24	d_1 + 115	50 ± 12	R	**350 VRME R**
355	**360**	347	32,5	65	30	d_1 + 24	d_1 + 115	50 ± 12	R	**355 VE R**
		347	32,5	65	21	d_1 + 24	d_1 + 115	50 ± 12	R	**355 VRME R**
360	**365**	352	32,5	65	30	d_1 + 24	d_1 + 115	50 ± 12	R	**360 VE R**
		357	32,5	65	21	d_1 + 24	d_1 + 115	50 ± 12	R	**360 VRME R**
365	**385**	337	6	10,5	6,5	d_1 + 5	d_1 + 20	8 ± 1,5	R	**375 VL R**
		337	6	10,5	6,5	d_1 + 5	d_1 + 20	8 ± 1,5	V	**375 VL V**
365	**390**	337	14,3	25	15	d_1 + 10	d_1 + 45	20 ± 4	R	**375 VA R**
		337	14,3	25	15	d_1 + 10	d_1 + 45	20 ± 4	V	**375 VA V**
365	**370**	357	32,5	65	30	d_1 + 24	d_1 + 115	50 ± 12	R	**365 VE R**
370	**375**	362	32,5	65	30	d_1 + 24	d_1 + 115	50 ± 12	R	**370 VE R**
		362	32,5	65	21	d_1 + 24	d_1 + 115	50 ± 12	R	**370 VRME R**
375	**380**	367	32,5	65	30	d_1 + 24	d_1 + 115	50 ± 12	R	**375 VE R**
		367	32,5	65	21	d_1 + 24	d_1 + 115	50 ± 12	R	**375 VRME R**
380	**385**	371	32,5	65	30	d_1 + 24	d_1 + 115	50 ± 12	R	**380 VE R**
		371	32,5	65	21	d_1 + 24	d_1 + 115	50 ± 12	R	**380 VRME R**
385	**410**	360	6	10,5	6,5	d_1 + 5	d_1 + 20	8 ± 1,5	R	**400 VL R**
		360	6	10,5	6,5	d_1 + 5	d_1 + 20	8 ± 1,5	V	**400 VL V**
390	**430**	360	14,3	25	15	d_1 + 10	d_1 + 45	20 ± 4	R	**400 VA R**
		360	14,3	25	15	d_1 + 10	d_1 + 45	20 ± 4	V	**400 VA V**
385	**390**	376	32,5	65	30	d_1 + 24	d_1 + 115	50 ± 12	R	**385 VE R**
		376	32,5	65	21	d_1 + 24	d_1 + 115	50 ± 12	R	**385 VRME R**
390	**395**	381	32,5	65	30	d_1 + 24	d_1 + 115	50 ± 12	R	**390 VE R**
		381	32,5	65	21	d_1 + 24	d_1 + 115	50 ± 12	R	**390 VRME R**

V-ring seals – metric dimensions, globally valid outside North American market

d_1 **395 – 540** mm

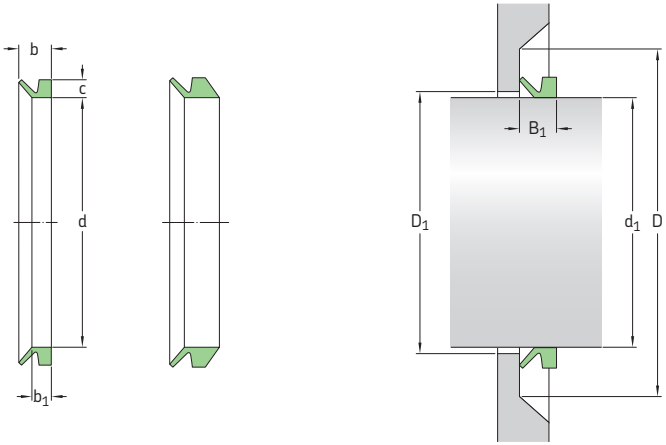

Dimensions Shaft diameter range d_1 over	incl.	Seal inside diameter, free state d	Seal seat width b_1	Nominal seal width b	Nominal seal height c	Clearance D_1 max	Counterface D min	Seal fitted width B_1	Lip code	Designation
mm									–	–
395	**400**	386	32,5	65	30	$d_1 + 24$	$d_1 + 115$	50 ± 12	R	**395 VE R**
		386	32,5	65	21	$d_1 + 24$	$d_1 + 115$	50 ± 12	R	**395 VRME R**
400	**405**	391	32,5	65	30	$d_1 + 24$	$d_1 + 115$	50 ± 12	R	**400 VE R**
		391	32,5	65	21	$d_1 + 24$	$d_1 + 115$	50 ± 12	R	**400 VRME R**
405	**410**	396	32,5	65	30	$d_1 + 24$	$d_1 + 115$	50 ± 12	R	**405 VE R**
		396	32,5	65	21	$d_1 + 24$	$d_1 + 115$	50 ± 12	R	**405 VRME R**
410	**415**	401	32,5	65	30	$d_1 + 24$	$d_1 + 115$	50 ± 12	R	**410 VE R**
		401	32,5	65	21	$d_1 + 24$	$d_1 + 115$	50 ± 12	R	**410 VRME R**
415	**420**	405	32,5	65	30	$d_1 + 24$	$d_1 + 115$	50 ± 12	R	**415 VE R**
		405	32,5	65	21	$d_1 + 24$	$d_1 + 115$	50 ± 12	R	**415 VRME R**
420	**425**	410	32,5	65	30	$d_1 + 24$	$d_1 + 115$	50 ± 12	R	**420 VE R**
		410	32,5	65	21	$d_1 + 24$	$d_1 + 115$	50 ± 12	R	**420 VRME R**
425	**430**	415	32,5	65	30	$d_1 + 24$	$d_1 + 115$	50 ± 12	R	**425 VE R**
		415	32,5	65	21	$d_1 + 24$	$d_1 + 115$	50 ± 12	R	**425 VRME R**
410	**440**	382	6	10,5	6,5	$d_1 + 5$	$d_1 + 20$	8 ± 1,5	R	**425 VL R**
		382	6	10,5	6,5	$d_1 + 5$	$d_1 + 20$	8 ± 1,5	V	**425 VL V**
440	**475**	405	6	10,5	6,5	$d_1 + 5$	$d_1 + 20$	8 ± 1,5	R	**450 VL R**
		405	6	10,5	6,5	$d_1 + 5$	$d_1 + 20$	8 ± 1,5	V	**450 VL V**
430	**480**	405	14,3	25	15	$d_1 + 10$	$d_1 + 45$	20 ± 4	R	**450 VA R**
		405	14,3	25	15	$d_1 + 10$	$d_1 + 45$	20 ± 4	V	**450 VA V**
430	**435**	420	32,5	65	30	$d_1 + 24$	$d_1 + 115$	50 ± 12	R	**430 VE R**
		420	32,5	65	21	$d_1 + 24$	$d_1 + 115$	50 ± 12	R	**430 VRME R**
435	**440**	425	32,5	65	30	$d_1 + 24$	$d_1 + 115$	50 ± 12	R	**435 VE R**
		425	32,5	65	21	$d_1 + 24$	$d_1 + 115$	50 ± 12	R	**435 VRME R**
440	**445**	429	32,5	65	30	$d_1 + 24$	$d_1 + 115$	50 ± 12	R	**440 VE R**
		429	32,5	65	21	$d_1 + 24$	$d_1 + 115$	50 ± 12	R	**440 VRME R**
445	**450**	434	32,5	65	30	$d_1 + 24$	$d_1 + 115$	50 ± 12	R	**445 VE R**
		434	32,5	65	21	$d_1 + 24$	$d_1 + 115$	50 ± 12	R	**445 VRME R**

Dimensions									Lip code	Designation
Shaft diameter range		Seal inside diameter, free state	Seal seat width	Nominal seal width	Nominal seal height	Clearance	Counterface	Seal fitted width		
d_1		d	b_1	b	c	D_1	D	B_1		
over	incl.					max	min			
mm									–	–
450	**455**	439	32,5	65	30	d_1 + 24	d_1 + 115	50 ± 12	R	**450 VE R**
		439	32,5	65	21	d_1 + 24	d_1 + 115	50 ± 12	R	**450 VRME R**
455	**460**	444	32,5	65	30	d_1 + 24	d_1 + 115	50 ± 12	R	**455 VE R**
		444	32,5	65	21	d_1 + 24	d_1 + 115	50 ± 12	R	**455 VRME R**
460	**465**	448	32,5	65	30	d_1 + 24	d_1 + 115	50 ± 12	R	**460 VE R**
		448	32,5	65	21	d_1 + 24	d_1 + 115	50 ± 12	R	**460 VRME R**
465	**470**	453	32,5	65	30	d_1 + 24	d_1 + 115	50 ± 12	R	**465 VE R**
		453	32,5	65	21	d_1 + 24	d_1 + 115	50 ± 12	R	**465 VRME R**
470	**475**	458	32,5	65	30	d_1 + 24	d_1 + 115	50 ± 12	R	**470 VE R**
		458	32,5	65	21	d_1 + 24	d_1 + 115	50 ± 12	R	**470 VRME R**
475	**480**	463	32,5	65	30	d_1 + 24	d_1 + 115	50 ± 12	R	**475 VE R**
		463	32,5	65	21	d_1 + 24	d_1 + 115	50 ± 12	R	**475 VRME R**
475	**510**	450	6	10,5	6,5	d_1 + 5	d_1 + 20	8 ± 1,5	R	**500 VL R**
		450	6	10,5	6,5	d_1 + 5	d_1 + 20	8 ± 1,5	V	**500 VL V**
510	**540**	472	6	10,5	6,5	d_1 + 5	d_1 + 20	8 ± 1,5	R	**525 VL R**
		472	6	10,5	6,5	d_1 + 5	d_1 + 20	8 ± 1,5	V	**525 VL V**
480	**530**	450	14,3	25	15	d_1 + 10	d_1 + 45	20 ± 4	R	**500 VA R**
		450	14,3	25	15	d_1 + 10	d_1 + 45	20 ± 4	V	**500 VA V**
480	**485**	468	32,5	65	30	d_1 + 24	d_1 + 115	50 ± 12	R	**480 VE R**
		468	32,5	65	21	d_1 + 24	d_1 + 115	50 ± 12	R	**480 VRME R**
485	**490**	473	32,5	65	30	d_1 + 24	d_1 + 115	50 ± 12	R	**485 VE R**
		473	32,5	65	21	d_1 + 24	d_1 + 115	50 ± 12	R	**485 VRME R**
490	**495**	478	32,5	65	30	d_1 + 24	d_1 + 115	50 ± 12	R	**490 VE R**
		478	32,5	65	21	d_1 + 24	d_1 + 115	50 ± 12	R	**490 VRME R**
495	**500**	483	32,5	65	30	d_1 + 24	d_1 + 115	50 ± 12	R	**495 VE R**
		483	32,5	65	21	d_1 + 24	d_1 + 115	50 ± 12	R	**495 VRME R**
500	**505**	488	32,5	65	30	d_1 + 24	d_1 + 115	50 ± 12	R	**500 VE R**
		488	32,5	65	21	d_1 + 24	d_1 + 115	50 ± 12	R	**500 VRME R**
505	**510**	493	32,5	65	30	d_1 + 24	d_1 + 115	50 ± 12	R	**505 VE R**
		493	32,5	65	21	d_1 + 24	d_1 + 115	50 ± 12	R	**505 VRME R**
510	**515**	497	32,5	65	30	d_1 + 24	d_1 + 115	50 ± 12	R	**510 VE R**
		497	32,5	65	21	d_1 + 24	d_1 + 115	50 ± 12	R	**510 VRME R**
515	**520**	502	32,5	65	30	d_1 + 24	d_1 + 115	50 ± 12	R	**515 VE R**
		502	32,5	65	21	d_1 + 24	d_1 + 115	50 ± 12	R	**515 VRME R**
520	**525**	507	32,5	65	30	d_1 + 24	d_1 + 115	50 ± 12	R	**520 VE R**
		507	32,5	65	21	d_1 + 24	d_1 + 115	50 ± 12	R	**520 VRME R**
525	**530**	512	32,5	65	30	d_1 + 24	d_1 + 115	50 ± 12	R	**525 VE R**
		512	32,5	65	21	d_1 + 24	d_1 + 115	50 ± 12	R	**525 VRME R**
540	**575**	495	6	10,5	6,5	d_1 + 5	d_1 + 20	8 ± 1,5	R	**550 VL R**
		495	6	10,5	6,5	d_1 + 5	d_1 + 20	8 ± 1,5	V	**550 VL V**
530	**580**	495	14,3	25	15	d_1 + 10	d_1 + 45	20 ± 4	R	**550 VA R**
		495	14,3	25	15	d_1 + 10	d_1 + 45	20 ± 4	V	**550 VA V**
530	**535**	517	32,5	65	30	d_1 + 24	d_1 + 115	50 ± 12	R	**530 VE R**
		517	32,5	65	21	d_1 + 24	d_1 + 115	50 ± 12	R	**530 VRME R**
535	**540**	521	32,5	65	30	d_1 + 24	d_1 + 115	50 ± 12	R	**535 VE R**
		521	32,5	65	21	d_1 + 24	d_1 + 115	50 ± 12	R	**535 VRME R**

V-ring seals – metric dimensions, globally valid outside North American market

d_1 **540 – 758** mm

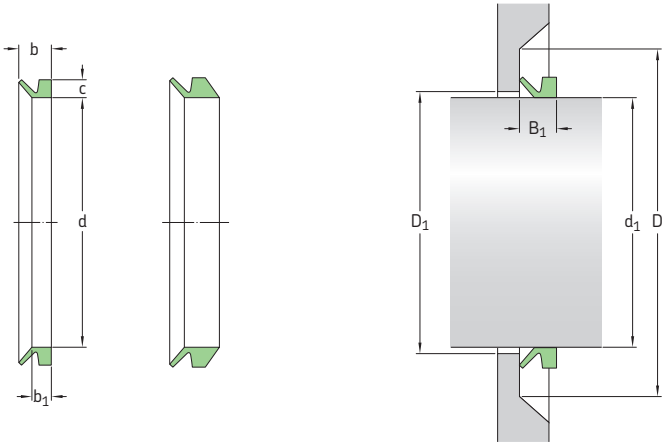

Dimensions Shaft diameter range d_1 over	incl.	Seal inside diameter, free state d	Seal seat width b_1	Nominal seal width b	Nominal seal height c	Clearance D_1 max	Counterface D min	Seal fitted width B_1	Lip code	Designation
mm									–	–
540	**545**	526	32,5	65	30	$d_1 + 24$	$d_1 + 115$	50 ± 12	R	**540 VE R**
		526	32,5	65	21	$d_1 + 24$	$d_1 + 115$	50 ± 12	R	**540 VRME R**
545	**550**	531	32,5	65	30	$d_1 + 24$	$d_1 + 115$	50 ± 12	R	**545 VE R**
		531	32,5	65	21	$d_1 + 24$	$d_1 + 115$	50 ± 12	R	**545 VRME R**
550	**555**	536	32,5	65	30	$d_1 + 24$	$d_1 + 115$	50 ± 12	R	**550 VE R**
		536	32,5	65	21	$d_1 + 24$	$d_1 + 115$	50 ± 12	R	**550 VRME R**
555	**560**	541	32,5	65	30	$d_1 + 24$	$d_1 + 115$	50 ± 12	R	**555 VE R**
		541	32,5	65	21	$d_1 + 24$	$d_1 + 115$	50 ± 12	R	**555 VRME R**
560	**565**	546	32,5	65	30	$d_1 + 24$	$d_1 + 115$	50 ± 12	R	**560 VE R**
		546	32,5	65	21	$d_1 + 24$	$d_1 + 115$	50 ± 12	R	**560 VRME R**
565	**570**	550	32,5	65	30	$d_1 + 24$	$d_1 + 115$	50 ± 12	R	**565 VE R**
		550	32,5	65	21	$d_1 + 24$	$d_1 + 115$	50 ± 12	R	**565 VRME R**
570	**575**	555	32,5	65	30	$d_1 + 24$	$d_1 + 115$	50 ± 12	R	**570 VE R**
		555	32,5	65	21	$d_1 + 24$	$d_1 + 115$	50 ± 12	R	**570 VRME R**
575	**580**	560	32,5	65	30	$d_1 + 24$	$d_1 + 115$	50 ± 12	R	**575 VE R**
		560	32,5	65	21	$d_1 + 24$	$d_1 + 115$	50 ± 12	R	**575 VRME R**
575	**625**	540	6	10,5	6,5	$d_1 + 5$	$d_1 + 20$	8 ± 1,5	R	**600 VL R**
		540	6	10,5	6,5	$d_1 + 5$	$d_1 + 20$	8 ± 1,5	V	**600 VL V**
580	**630**	540	14,3	25	15	$d_1 + 10$	$d_1 + 45$	20 ± 4	R	**600 VA R**
		540	14,3	25	15	$d_1 + 10$	$d_1 + 45$	20 ± 4	V	**600 VA V**
580	**585**	565	32,5	65	30	$d_1 + 24$	$d_1 + 115$	50 ± 12	R	**580 VE R**
		565	32,5	65	21	$d_1 + 24$	$d_1 + 115$	50 ± 12	R	**580 VRME R**
585	**590**	570	32,5	65	30	$d_1 + 24$	$d_1 + 115$	50 ± 12	R	**585 VE R**
		570	32,5	65	21	$d_1 + 24$	$d_1 + 115$	50 ± 12	R	**585 VRME R**
590	**600**	575	32,5	65	30	$d_1 + 24$	$d_1 + 115$	50 ± 12	R	**590 VE R**
		575	32,5	65	21	$d_1 + 24$	$d_1 + 115$	50 ± 12	R	**590 VRME R**
600	**610**	582	32,5	65	30	$d_1 + 24$	$d_1 + 115$	50 ± 12	R	**600 VE R**
		582	32,5	65	21	$d_1 + 24$	$d_1 + 115$	50 ± 12	R	**600 VRME R**

Dimensions									Lip code	Designation
Shaft diameter range		Seal inside diameter, free state	Seal seat width	Nominal seal width	Nominal seal height	Clearance	Counterface	Seal fitted width		
d_1		d	b_1	b	c	D_1	D	B_1		
over	incl.					max	min			
mm									–	–
610	**620**	592	32,5	65	30	d_1 + 24	d_1 + 115	50 ± 12	R	**610 VE R**
		592	32,5	65	21	d_1 + 24	d_1 + 115	50 ± 12	R	**610 VRME R**
620	**630**	602	32,5	65	30	d_1 + 24	d_1 + 115	50 ± 12	R	**620 VE R**
		602	32,5	65	21	d_1 + 24	d_1 + 115	50 ± 12	R	**620 VRME R**
615	**675**	600	6	10,5	6,5	d_1 + 5	d_1 + 20	8 ± 1,5	R	**650 VL R**
		600	6	10,5	6,5	d_1 + 5	d_1 + 20	8 ± 1,5	V	**650 VL V**
630	**665**	600	14,3	25	15	d_1 + 10	d_1 + 45	20 ± 4	R	**650 VA R**
		600	14,3	25	15	d_1 + 10	d_1 + 45	20 ± 4	V	**650 VA V**
630	**640**	612	32,5	65	30	d_1 + 24	d_1 + 115	50 ± 12	R	**630 VE R**
		612	32,5	65	21	d_1 + 24	d_1 + 115	50 ± 12	R	**630 VRME R**
640	**650**	621	32,5	65	30	d_1 + 24	d_1 + 115	50 ± 12	R	**640 VE R**
		621	32,5	65	21	d_1 + 24	d_1 + 115	50 ± 12	R	**640 VRME R**
650	**660**	631	32,5	65	30	d_1 + 24	d_1 + 115	50 ± 12	R	**650 VE R**
		631	32,5	65	21	d_1 + 24	d_1 + 115	50 ± 12	R	**650 VRME R**
660	**670**	640	32,5	65	30	d_1 + 24	d_1 + 115	50 ± 12	R	**660 VE R**
		640	32,5	65	21	d_1 + 24	d_1 + 115	50 ± 12	R	**660 VRME R**
675	**710**	630	6	10,5	6,5	d_1 + 5	d_1 + 20	8 ± 1,5	R	**700 VL R**
		630	6	10,5	6,5	d_1 + 5	d_1 + 20	8 ± 1,5	V	**700 VL V**
665	**705**	630	14,3	25	15	d_1 + 10	d_1 + 45	20 ± 4	R	**700 VA R**
		630	14,3	25	15	d_1 + 10	d_1 + 45	20 ± 4	V	**700 VA V**
670	**680**	650	32,5	65	30	d_1 + 24	d_1 + 115	50 ± 12	R	**670 VE R**
		650	32,5	65	21	d_1 + 24	d_1 + 115	50 ± 12	R	**670 VRME R**
680	**690**	660	32,5	65	30	d_1 + 24	d_1 + 115	50 ± 12	R	**680 VE R**
		660	32,5	65	21	d_1 + 24	d_1 + 115	50 ± 12	R	**680 VRME R**
690	**700**	670	32,5	65	30	d_1 + 24	d_1 + 115	50 ± 12	R	**690 VE R**
		670	32,5	65	21	d_1 + 24	d_1 + 115	50 ± 12	R	**690 VRME R**
700	**710**	680	32,5	65	30	d_1 + 24	d_1 + 115	50 ± 12	R	**700 VE R**
		680	32,5	65	21	d_1 + 24	d_1 + 115	50 ± 12	R	**700 VRME R**
710	**740**	670	6	10,5	6,5	d_1 + 5	d_1 + 20	8 ± 1,5	R	**725 VL R**
		670	6	10,5	6,5	d_1 + 5	d_1 + 20	8 ± 1,5	V	**725 VL V**
705	**745**	670	14,3	25	15	d_1 + 10	d_1 + 45	20 ± 4	R	**725 VA R**
		670	14,3	25	15	d_1 + 10	d_1 + 45	20 ± 4	V	**725 VA V**
710	**720**	689	32,5	65	30	d_1 + 24	d_1 + 115	50 ± 12	R	**710 VE R**
		689	32,5	65	21	d_1 + 24	d_1 + 115	50 ± 12	R	**710 VRME R**
720	**730**	699	32,5	65	30	d_1 + 24	d_1 + 115	50 ± 12	R	**720 VE R**
		699	32,5	65	21	d_1 + 24	d_1 + 115	50 ± 12	R	**720 VRME R**
730	**740**	709	32,5	65	30	d_1 + 24	d_1 + 115	50 ± 12	R	**730 VE R**
		709	32,5	65	21	d_1 + 24	d_1 + 115	50 ± 12	R	**730 VRME R**
740	**750**	718	32,5	65	30	d_1 + 24	d_1 + 115	50 ± 12	R	**740 VE R**
		718	32,5	65	21	d_1 + 24	d_1 + 115	50 ± 12	R	**740 VRME R**
740	**775**	705	6	10,5	6,5	d_1 + 5	d_1 + 20	8 ± 1,5	R	**750 VL R**
		705	6	10,5	6,5	d_1 + 5	d_1 + 20	8 ± 1,5	V	**750 VL V**
745	**785**	705	14,3	25	15	d_1 + 10	d_1 + 45	20 ± 4	R	**750 VA R**
		705	14,3	25	15	d_1 + 10	d_1 + 45	20 ± 4	V	**750 VA V**
750	**758**	728	32,5	65	30	d_1 + 24	d_1 + 115	50 ± 12	R	**750 VE R**
		728	32,5	65	21	d_1 + 24	d_1 + 115	50 ± 12	R	**750 VRME R**

V-ring seals – metric dimensions, globally valid outside North American market

d_1 **758 – 1 065** mm

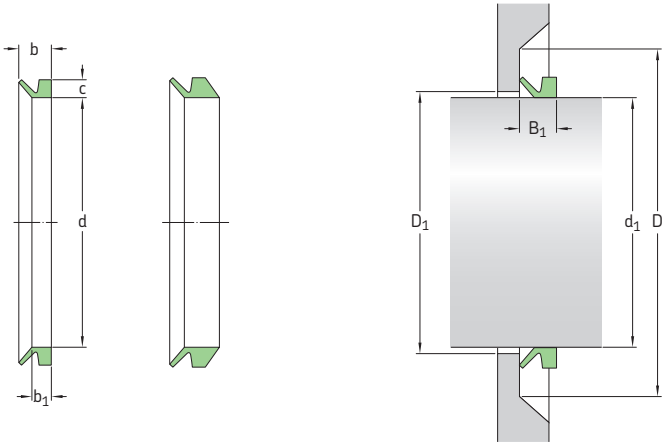

Dimensions Shaft diameter range d_1 over	incl.	Seal inside diameter, free state d	Seal seat width b_1	Nominal seal width b	Nominal seal height c	Clearance D_1 max	Counterface D min	Seal fitted width B_1	Lip code	Designation
mm									–	–
758	**766**	735	32,5	65	30	$d_1 + 24$	$d_1 + 115$	50 ± 12	R	**760 VE R**
		735	32,5	65	21	$d_1 + 24$	$d_1 + 115$	50 ± 12	R	**760 VRME R**
766	**774**	743	32,5	65	30	$d_1 + 24$	$d_1 + 115$	50 ± 12	R	**770 VE R**
		743	32,5	65	21	$d_1 + 24$	$d_1 + 115$	50 ± 12	R	**770 VRME R**
774	**783**	751	32,5	65	30	$d_1 + 24$	$d_1 + 115$	50 ± 12	R	**780 VE R**
		751	32,5	65	21	$d_1 + 24$	$d_1 + 115$	50 ± 12	R	**780 VRME R**
783	**792**	759	32,5	65	30	$d_1 + 24$	$d_1 + 115$	50 ± 12	R	**790 VE R**
		759	32,5	65	21	$d_1 + 24$	$d_1 + 115$	50 ± 12	R	**790 VRME R**
775	**825**	745	6	10,5	6,5	$d_1 + 5$	$d_1 + 20$	8 ± 1,5	R	**800 VL R**
		745	6	10,5	6,5	$d_1 + 5$	$d_1 + 20$	8 ± 1,5	V	**800 VL V**
785	**830**	745	14,3	25	15	$d_1 + 10$	$d_1 + 45$	20 ± 4	R	**800 VA R**
		745	14,3	25	15	$d_1 + 10$	$d_1 + 45$	20 ± 4	V	**800 VA V**
792	**801**	768	32,5	65	30	$d_1 + 24$	$d_1 + 115$	50 ± 12	R	**800 VE R**
		768	32,5	65	21	$d_1 + 24$	$d_1 + 115$	50 ± 12	R	**800 VRME R**
801	**810**	777	32,5	65	30	$d_1 + 24$	$d_1 + 115$	50 ± 12	R	**810 VE R**
		777	32,5	65	21	$d_1 + 24$	$d_1 + 115$	50 ± 12	R	**810 VRME R**
810	**821**	786	32,5	65	30	$d_1 + 24$	$d_1 + 115$	50 ± 12	R	**820 VE R**
		786	32,5	65	21	$d_1 + 24$	$d_1 + 115$	50 ± 12	R	**820 VRME R**
821	**831**	796	32,5	65	30	$d_1 + 24$	$d_1 + 115$	50 ± 12	R	**830 VE R**
		796	32,5	65	21	$d_1 + 24$	$d_1 + 115$	50 ± 12	R	**830 VRME R**
825	**875**	785	6	10,5	6,5	$d_1 + 5$	$d_1 + 20$	8 ± 1,5	R	**850 VL R**
		785	6	10,5	6,5	$d_1 + 5$	$d_1 + 20$	8 ± 1,5	V	**850 VL V**
830	**875**	785	14,3	25	15	$d_1 + 10$	$d_1 + 45$	20 ± 4	R	**850 VA R**
		785	14,3	25	15	$d_1 + 10$	$d_1 + 45$	20 ± 4	V	**850 VA V**
831	**841**	805	32,5	65	30	$d_1 + 24$	$d_1 + 115$	50 ± 12	R	**840 VE R**
		805	32,5	65	21	$d_1 + 24$	$d_1 + 115$	50 ± 12	R	**840 VRME R**
841	**851**	814	32,5	65	30	$d_1 + 24$	$d_1 + 115$	50 ± 12	R	**850 VE R**
		814	32,5	65	21	$d_1 + 24$	$d_1 + 115$	50 ± 12	R	**850 VRME R**

Dimensions									Lip code	Designation
Shaft diameter range		Seal inside diameter, free state	Seal seat width	Nominal seal width	Nominal seal height	Clearance	Counterface	Seal fitted width		
d_1 over	incl.	d	b_1	b	c	D_1 max	D min	B_1		
mm									–	–
851	**861**	824	32,5	65	30	$d_1 + 24$	$d_1 + 115$	50 ± 12	R	**860 VE R**
		824	32,5	65	21	$d_1 + 24$	$d_1 + 115$	50 ± 12	R	**860 VRME R**
861	**871**	833	32,5	65	30	$d_1 + 24$	$d_1 + 115$	50 ± 12	R	**870 VE R**
		833	32,5	65	21	$d_1 + 24$	$d_1 + 115$	50 ± 12	R	**870 VRME R**
871	**882**	843	32,5	65	30	$d_1 + 24$	$d_1 + 115$	50 ± 12	R	**880 VE R**
		843	32,5	65	21	$d_1 + 24$	$d_1 + 115$	50 ± 12	R	**880 VRME R**
875	**925**	825	6	10,5	6,5	$d_1 + 5$	$d_1 + 20$	8 ± 1,5	R	**900 VL R**
		825	6	10,5	6,5	$d_1 + 5$	$d_1 + 20$	8 ± 1,5	V	**900 VL V**
875	**920**	825	14,3	25	15	$d_1 + 10$	$d_1 + 45$	20 ± 4	R	**900 VA R**
		825	14,3	25	15	$d_1 + 10$	$d_1 + 45$	20 ± 4	V	**900 VA V**
882	**892**	853	32,5	65	30	$d_1 + 24$	$d_1 + 115$	50 ± 12	R	**890 VE R**
		853	32,5	65	21	$d_1 + 24$	$d_1 + 115$	50 ± 12	R	**890 VRME R**
892	**912**	871	32,5	65	30	$d_1 + 24$	$d_1 + 115$	50 ± 12	R	**900 VE R**
		871	32,5	65	21	$d_1 + 24$	$d_1 + 115$	50 ± 12	R	**900 VRME R**
912	**922**	880	32,5	65	30	$d_1 + 24$	$d_1 + 115$	50 ± 12	R	**920 VE R**
		880	32,5	65	21	$d_1 + 24$	$d_1 + 115$	50 ± 12	R	**920 VRME R**
925	**975**	865	6	10,5	6,5	$d_1 + 5$	$d_1 + 20$	8 ± 1,5	R	**950 VL R**
		865	6	10,5	6,5	$d_1 + 5$	$d_1 + 20$	8 ± 1,5	V	**950 VL V**
920	**965**	865	14,3	25	15	$d_1 + 10$	$d_1 + 45$	20 ± 4	R	**950 VA R**
		865	14,3	25	15	$d_1 + 10$	$d_1 + 45$	20 ± 4	V	**950 VA V**
922	**933**	890	32,5	65	30	$d_1 + 24$	$d_1 + 115$	50 ± 12	R	**930 VE R**
		890	32,5	65	21	$d_1 + 24$	$d_1 + 115$	50 ± 12	R	**930 VRME R**
933	**944**	900	32,5	65	30	$d_1 + 24$	$d_1 + 115$	50 ± 12	R	**940 VE R**
		900	32,5	65	21	$d_1 + 24$	$d_1 + 115$	50 ± 12	R	**940 VRME R**
944	**955**	911	32,5	65	30	$d_1 + 24$	$d_1 + 115$	50 ± 12	R	**950 VE R**
		911	32,5	65	21	$d_1 + 24$	$d_1 + 115$	50 ± 12	R	**950 VRME R**
955	**966**	921	32,5	65	30	$d_1 + 24$	$d_1 + 115$	50 ± 12	R	**960 VE R**
		921	32,5	65	21	$d_1 + 24$	$d_1 + 115$	50 ± 12	R	**960 VRME R**
975	**1025**	910	6	10,5	6,5	$d_1 + 5$	$d_1 + 20$	8 ± 1,5	R	**1000 VL R**
		910	6	10,5	6,5	$d_1 + 5$	$d_1 + 20$	8 ± 1,5	V	**1000 VL V**
965	**1015**	910	14,3	25	15	$d_1 + 10$	$d_1 + 45$	20 ± 4	R	**1000 VA R**
		910	14,3	25	15	$d_1 + 10$	$d_1 + 45$	20 ± 4	V	**1000 VA V**
966	**977**	932	32,5	65	30	$d_1 + 24$	$d_1 + 115$	50 ± 12	R	**970 VE R**
		932	32,5	65	21	$d_1 + 24$	$d_1 + 115$	50 ± 12	R	**970 VRME R**
977	**988**	942	32,5	65	30	$d_1 + 24$	$d_1 + 115$	50 ± 12	R	**980 VE R**
		942	32,5	65	21	$d_1 + 24$	$d_1 + 115$	50 ± 12	R	**980 VRME R**
988	**999**	953	32,5	65	30	$d_1 + 24$	$d_1 + 115$	50 ± 12	R	**990 VE R**
		953	32,5	65	21	$d_1 + 24$	$d_1 + 115$	50 ± 12	R	**990 VRME R**
999	**1 010**	963	32,5	65	30	$d_1 + 24$	$d_1 + 115$	50 ± 12	R	**1000 VE R**
		963	32,5	65	21	$d_1 + 24$	$d_1 + 115$	50 ± 12	R	**1000 VRME R**
1 010	**1 025**	973	32,5	65	30	$d_1 + 24$	$d_1 + 115$	50 ± 12	R	**1020 VE R**
		973	32,5	65	21	$d_1 + 24$	$d_1 + 115$	50 ± 12	R	**1020 VRME R**
1 025	**1 075**	955	6	10,5	6,5	$d_1 + 5$	$d_1 + 20$	8 ± 1,5	R	**1050 VL R**
		955	6	10,5	6,5	$d_1 + 5$	$d_1 + 20$	8 ± 1,5	V	**1050 VL V**
1 015	**1 065**	955	14,3	25	15	$d_1 + 10$	$d_1 + 45$	20 ± 4	R	**1050 VA R**

V-ring seals – metric dimensions, globally valid outside North American market

d_1 **1 025 – 1 515** mm

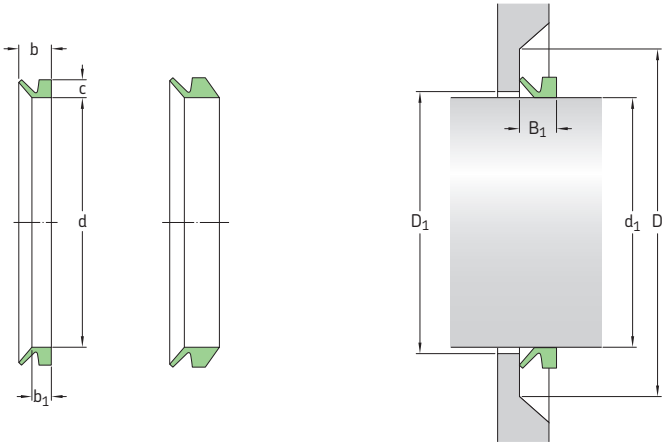

Dimensions Shaft diameter range d_1 over	incl.	Seal inside diameter, free state d	Seal seat width b_1	Nominal seal width b	Nominal seal height c	Clearance D_1 max	Counterface D min	Seal fitted width B_1	Lip code	Designation
mm									–	–
1 025	**1 045**	990	32,5	65	30	d_1 + 24	d_1 + 115	50 ± 12	R	**1040 VE R**
		990	32,5	65	21	d_1 + 24	d_1 + 115	50 ± 12	R	**1040 VRME R**
1 045	**1 065**	1 008	32,5	65	30	d_1 + 24	d_1 + 115	50 ± 12	R	**1060 VE R**
		1 008	32,5	65	21	d_1 + 24	d_1 + 115	50 ± 12	R	**1060 VRME R**
1 075	**1 125**	1 000	6	10,5	6,5	d_1 + 5	d_1 + 20	8 ± 1,5	R	**1100 VL R**
		1 000	6	10,5	6,5	d_1 + 5	d_1 + 20	8 ± 1,5	V	**1100 VL V**
1 065	**1 115**	1 000	14,3	25	15	d_1 + 10	d1 + 45	20 ± 4	R	**1100 VA R**
1 065	**1 085**	1 027	32,5	65	30	d_1 + 24	d_1 + 115	50 ± 12	R	**1080 VE R**
		1 027	32,5	65	21	d_1 + 24	d_1 + 115	50 ± 12	R	**1080 VRME R**
1 085	**1 105**	1 045	32,5	65	30	d_1 + 24	d_1 + 115	50 ± 12	R	**1100 VE R**
		1 045	32,5	65	21	d_1 + 24	d_1 + 115	50 ± 12	R	**1100 VRME R**
1 105	**1 125**	1 065	32,5	65	30	d_1 + 24	d_1 + 115	50 ± 12	R	**1120 VE R**
		1 065	32,5	65	21	d_1 + 24	d_1 + 115	50 ± 12	R	**1120 VRME R**
1 125	**1 175**	1 045	6	10,5	6,5	d_1 + 5	d_1 + 20	8 ± 1,5	R	**1150 VL R**
		1 045	6	10,5	6,5	d_1 + 5	d_1 + 20	8 ± 1,5	V	**1150 VL V**
1 115	**1 165**	1 045	14,3	25	15	d_1 + 10	d_1 + 45	20 ± 4	R	**1150 VA R**
1 125	**1 145**	1 084	32,5	65	30	d_1 + 24	d_1 + 115	50 ± 12	R	**1140 VE R**
		1 084	32,5	65	21	d_1 + 24	d_1 + 115	50 ± 12	R	**1140 VRME R**
1 145	**1 165**	1 103	32,5	65	30	d_1 + 24	d_1 + 115	50 ± 12	R	**1160 VE R**
		1 103	32,5	65	21	d_1 + 24	d_1 + 115	50 ± 12	R	**1160 VRME R**
1 175	**1 225**	1 090	6	10,5	6,5	d_1 + 5	d_1 + 20	8 ± 1,5	R	**1200 VL R**
		1 090	6	10,5	6,5	d_1 + 5	d_1 + 20	8 ± 1,5	V	**1200 VL V**
1 165	**1 215**	1 090	14,3	25	15	d_1 + 10	d_1 + 45	20 ± 4	R	**1200 VA R**
1 165	**1 185**	1 121	32,5	65	30	d_1 + 24	d_1 + 115	50 ± 12	R	**1180 VE R**
		1 121	32,5	65	21	d_1 + 24	d_1 + 115	50 ± 12	R	**1180 VRME R**
1 185	**1 205**	1 139	32,5	65	30	d_1 + 24	d_1 + 115	50 ± 12	R	**1200 VE R**
		1 139	32,5	65	21	d_1 + 24	d_1 + 115	50 ± 12	R	**1200 VRME R**

Dimensions									Lip code	Designation
Shaft diameter range		Seal inside diameter, free state	Seal seat width	Nominal seal width	Nominal seal height	Clearance	Counterface	Seal fitted width		
d_1 over	incl.	d	b_1	b	c	D_1 max	D min	B_1		
mm									–	–
1 205	**1 225**	1 157	32,5	65	30	$d_1 + 24$	$d_1 + 115$	50 ± 12	R	**1220 VE R**
		1 157	32,5	65	21	$d_1 + 24$	$d_1 + 115$	50 ± 12	R	**1220 VRME R**
1 225	**1 275**	1 135	6	10,5	6,5	$d_1 + 5$	$d_1 + 20$	8 ± 1,5	R	**1250 VL R**
		1 135	6	10,5	6,5	$d_1 + 5$	$d_1 + 20$	8 ± 1,5	V	**1250 VL V**
1 215	**1 270**	1 135	14,3	25	15	$d_1 + 10$	$d_1 + 45$	20 ± 4	R	**1250 VA R**
1 225	**1 245**	1 176	32,5	65	30	$d_1 + 24$	$d_1 + 115$	50 ± 12	R	**1240 VE R**
		1 176	32,5	65	21	$d_1 + 24$	$d_1 + 115$	50 ± 12	R	**1240 VRME R**
1 245	**1 270**	1 195	32,5	65	30	$d_1 + 24$	$d_1 + 115$	50 ± 12	R	**1260 VE R**
		1 195	32,5	65	21	$d_1 + 24$	$d_1 + 115$	50 ± 12	R	**1260 VRME R**
1 270	**1 295**	1 218	32,5	65	30	$d_1 + 24$	$d_1 + 115$	50 ± 12	R	**1280 VE R**
		1 218	32,5	65	21	$d_1 + 24$	$d_1 + 115$	50 ± 12	R	**1280 VRME R**
1 275	**1 325**	1 180	6	10,5	6,5	$d_1 + 5$	$d_1 + 20$	8 ± 1,5	R	**1300 VL R**
		1 180	6	10,5	6,5	$d_1 + 5$	$d_1 + 20$	8 ± 1,5	V	**1300 VL V**
1 270	**1 320**	1 180	14,3	25	15	$d_1 + 10$	$d_1 + 45$	20 ± 4	R	**1300 VA R**
1 295	**1 315**	1 240	32,5	65	30	$d_1 + 24$	$d_1 + 115$	50 ± 12	R	**1300 VE R**
		1 240	32,5	65	21	$d_1 + 24$	$d_1 + 115$	50 ± 12	R	**1300 VRME R**
1 315	**1 340**	1 259	32,5	65	30	$d_1 + 24$	$d_1 + 115$	50 ± 12	R	**1325 VE R**
		1 259	32,5	65	21	$d_1 + 24$	$d_1 + 115$	50 ± 12	R	**1325 VRME R**
1 325	**1 375**	1 225	6	10,5	6,5	$d_1 + 5$	$d_1 + 20$	8 ± 1,5	R	**1350 VL R**
		1 225	6	10,5	6,5	$d_1 + 5$	$d_1 + 20$	8 ± 1,5	V	**1350 VL V**
1 320	**1 370**	1 225	14,3	25	15	$d_1 + 10$	$d_1 + 45$	20 ± 4	R	**1350 VA R**
1 340	**1 365**	1 281	32,5	65	30	$d_1 + 24$	$d_1 + 115$	50 ± 12	R	**1350 VE R**
		1 281	32,5	65	21	$d_1 + 24$	$d_1 + 115$	50 ± 12	R	**1350 VRME R**
1 365	**1 390**	1 305	32,5	65	30	$d_1 + 24$	$d_1 + 115$	50 ± 12	R	**1375 VE R**
		1 305	32,5	65	21	$d_1 + 24$	$d_1 + 115$	50 ± 12	R	**1375 VRME R**
1 375	**1 425**	1 270	6	10,5	6,5	$d_1 + 5$	$d_1 + 20$	8 ± 1,5	R	**1400 VL R**
		1 270	6	10,5	6,5	$d_1 + 5$	$d_1 + 20$	8 ± 1,5	V	**1400 VL V**
1 370	**1 420**	1 270	14,3	25	15	$d_1 + 10$	$d_1 + 45$	20 ± 4	R	**1400 VA R**
1 390	**1 415**	1 328	32,5	65	30	$d_1 + 24$	$d_1 + 115$	50 ± 12	R	**1400 VE R**
		1 328	32,5	65	21	$d_1 + 24$	$d_1 + 115$	50 ± 12	R	**1400 VRME R**
1 415	**1 440**	1 350	32,5	65	30	$d_1 + 24$	$d_1 + 115$	50 ± 12	R	**1425 VE R**
		1 350	32,5	65	21	$d_1 + 24$	$d_1 + 115$	50 ± 12	R	**1425 VRME R**
1 425	**1 475**	1 315	6	10,5	6,5	$d_1 + 5$	$d_1 + 20$	8 ± 1,5	R	**1450 VL R**
		1 315	6	10,5	6,5	$d_1 + 5$	$d_1 + 20$	8 ± 1,5	V	**1450 VL V**
1 420	**1 470**	1 315	14,3	25	15	$d_1 + 10$	$d_1 + 45$	20 ± 4	R	**1450 VA R**
1 440	**1 465**	1 374	32,5	65	30	$d_1 + 24$	$d_1 + 115$	50 ± 12	R	**1450 VE R**
		1 374	32,5	65	21	$d_1 + 24$	$d_1 + 115$	50 ± 12	R	**1450 VRME R**
1 465	**1 490**	1 397	32,5	65	30	$d_1 + 24$	$d_1 + 115$	50 ± 12	R	**1475 VE R**
		1 397	32,5	65	21	$d_1 + 24$	$d_1 + 115$	50 ± 12	R	**1475 VRME R**
1 475	**1 525**	1 360	6	10,5	6,5	$d_1 + 5$	$d_1 + 20$	8 ± 1,5	R	**1500 VL R**
		1 360	6	10,5	6,5	$d_1 + 5$	$d_1 + 20$	8 ± 1,5	V	**1500 VL V**
1 470	**1 520**	1 360	14,3	25	15	$d_1 + 10$	$d_1 + 45$	20 ± 4	R	**1500 VA R**
1 490	**1 515**	1 419	32,5	65	30	$d_1 + 24$	$d_1 + 115$	50 ± 12	R	**1500 VE R**
		1 419	32,5	65	21	$d_1 + 24$	$d_1 + 115$	50 ± 12	R	**1500 VRME R**

V-ring seals – metric dimensions, globally valid outside North American market

d_1 **1 515 – 2 020** mm

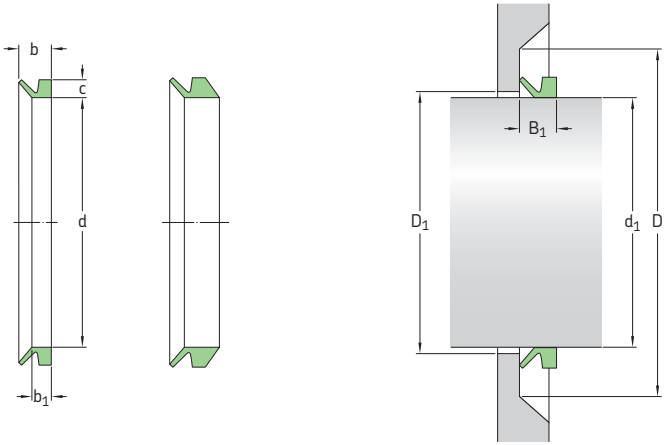

Dimensions Shaft diameter range d_1 over	incl.	Seal inside diameter, free state d	Seal seat width b_1	Nominal seal width b	Nominal seal height c	Clearance D_1 max	Counterface D min	Seal fitted width B_1	Lip code	Designation
mm									–	–
1 515	**1 540**	1 443	32,5	65	30	d_1 + 24	d_1 + 115	50 ± 12	R	**1525 VE R**
		1 443	32,5	65	21	d_1 + 24	d_1 + 115	50 ± 12	R	**1525 VRME R**
1 525	**1 575**	1 405	6	10,5	6,5	d_1 + 5	d_1 + 20	8 ± 1,5	R	**1550 VL R**
		1 405	6	10,5	6,5	d_1 + 5	d_1 + 20	8 ± 1,5	V	**1550 VL V**
1 520	**1 570**	1 405	14,3	25	15	d_1 + 10	d_1 + 45	20 ± 4	R	**1550 VA R**
1 540	**1 570**	1 467	32,5	65	30	d_1 + 24	d_1 + 115	50 ± 12	R	**1550 VE R**
		1 467	32,5	65	21	d_1 + 24	d_1 + 115	50 ± 12	R	**1550 VRME R**
1 570	**1 600**	1 495	32,5	65	30	d_1 + 24	d_1 + 115	50 ± 12	R	**1575 VE R**
		1 495	32,5	65	21	d_1 + 24	d_1 + 115	50 ± 12	R	**1575 VRME R**
1 575	**1 625**	1 450	6	10,5	6,5	d_1 + 5	d_1 + 20	8 ± 1,5	R	**1600 VL R**
		1 450	6	10,5	6,5	d_1 + 5	d_1 + 20	8 ± 1,5	V	**1600 VL V**
1 570	**1 620**	1 450	14,3	25	15	d_1 + 10	d_1 + 45	20 ± 4	R	**1600 VA R**
1 600	**1 640**	1 524	32,5	65	30	d_1 + 24	d_1 + 115	50 ± 12	R	**1600 VE R**
		1 524	32,5	65	21	d_1 + 24	d_1 + 115	50 ± 12	R	**1600 VRME R**
1 625	**1 675**	1 495	6	10,5	6,5	d_1 + 5	d_1 + 20	8 ± 1,5	R	**1650 VL R**
		1 495	6	10,5	6,5	d_1 + 5	d_1 + 20	8 ± 1,5	V	**1650 VL V**
1 620	**1 670**	1 495	14,3	25	15	d_1 + 10	d_1 + 45	20 ± 4	R	**1650 VA R**
1 640	**1 680**	1 559	32,5	65	30	d_1 + 24	d_1 + 115	50 ± 12	R	**1650 VE R**
		1 559	32,5	65	21	d_1 + 24	d_1 + 115	50 ± 12	R	**1650 VRME R**
1 675	**1 725**	1 540	6	10,5	6,5	d_1 + 5	d1 + 20	8 ± 1,5	R	**1700 VL R**
		1 540	6	10,5	6,5	d_1 + 5	d_1 + 20	8 ± 1,5	V	**1700 VL V**
1 670	**1 720**	1 540	14,3	25	15	d_1 + 10	d_1 + 45	20 ± 4	R	**1700 VA R**
1 680	**1 720**	1 596	32,5	65	30	d_1 + 24	d_1 + 115	50 ± 12	R	**1700 VE R**
		1 596	32,5	65	21	d_1 + 24	d_1 + 115	50 ± 12	R	**1700 VRME R**
1 725	**1 775**	1 585	6	10,5	6,5	d_1 + 5	d_1 + 20	8 ± 1,5	R	**1750 VL R**
		1 585	6	10,5	6,5	d_1 + 5	d_1 + 20	8 ± 1,5	V	**1750 VL V**
1 720	**1 770**	1 585	14,3	25	15	d_1 + 10	d_1 + 45	20 ± 4	R	**1750 VA R**

Dimensions									Lip code	Designation
Shaft diameter range		Seal inside diameter, free state	Seal seat width	Nominal seal width	Nominal seal height	Clearance	Counterface	Seal fitted width		
d_1		d	b_1	b	c	D_1	D	B_1		
over	incl.					max	min			
mm									–	–
1 720	**1 765**	1 632	32,5	65	30	d_1 + 24	d_1 + 115	50 ± 12	R	**1750 VE R**
		1 632	32,5	65	21	d_1 + 24	d_1 + 115	50 ± 12	R	**1750 VRME R**
1 765	**1 810**	1 671	32,5	65	30	d_1 + 24	d_1 + 115	50 ± 12	R	**1800 VE R**
		1 671	32,5	65	21	d_1 + 24	d_1 + 115	50 ± 12	R	**1800 VRME R**
1 775	**1 825**	1 630	6	10,5	6,5	d_1 + 5	d_1 + 20	8 ± 1,5	R	**1800 VL R**
		1 630	6	10,5	6,5	d_1 + 5	d_1 + 20	8 ± 1,5	V	**1800 VL V**
1 770	**1 820**	1 630	14,3	25	15	d_1 + 10	d_1 + 45	20 ± 4	R	**1800 VA R**
1 810	**1 855**	1 714	32,5	65	30	d_1 + 24	d_1 + 115	50 ± 12	R	**1850 VE R**
		1 714	32,5	65	21	d_1 + 24	d_1 + 115	50 ± 12	R	**1850 VRME R**
1 825	**1 875**	1 675	6	10,5	6,5	d_1 + 5	d_1 + 20	8 ± 1,5	R	**1850 VL R**
		1 675	6	10,5	6,5	d_1 + 5	d_1 + 20	8 ± 1,5	V	**1850 VL V**
1 820	**1 870**	1 675	14,3	25	15	d_1 + 10	d_1 + 45	20 ± 4	R	**1850 VA R**
1 855	**1 905**	1 753	32,5	65	30	d_1 + 24	d_1 + 115	50 ± 12	R	**1900 VE R**
		1 753	32,5	65	21	d_1 + 24	d_1 + 115	50 ± 12	R	**1900 VRME R**
1 875	**1 925**	1 720	6	10,5	6,5	d_1 + 5	d_1 + 20	8 ± 1,5	R	**1900 VL R**
		1 720	6	10,5	6,5	d_1 + 5	d_1 + 20	8 ± 1,5	V	**1900 VL V**
1 870	**1 920**	1 720	14,3	25	15	d_1 + 10	d_1 + 45	20 ± 4	R	**1900 VA R**
1 905	**1 955**	1 794	32,5	65	30	d_1 + 24	d_1 + 115	50 ± 12	R	**1950 VE R**
		1 794	32,5	65	21	d_1 + 24	d_1 + 115	50 ± 12	R	**1950 VRME R**
1 925	**1 975**	1 765	6	10,5	6,5	d_1 + 5	d1 + 20	8 ± 1,5	R	**1950 VL R**
		1 765	6	10,5	6,5	d_1 + 5	d_1 + 20	8 ± 1,5	V	**1950 VL V**
1 920	**1 970**	1 765	14,3	25	15	d_1 + 10	d_1 + 45	20 ± 4	R	**1950 VA R**
1 955	**2 010**	1 844	32,5	65	30	d_1 + 24	d_1 + 115	50 ± 12	R	**2000 VE R**
		1 844	32,5	65	21	d_1 + 24	d_1 + 115	50 ± 12	R	**2000 VRME R**
1 975	**2 025**	1 810	6	10,5	6,5	d_1 + 5	d_1 + 20	8 ± 1,5	R	**2000 VL R**
		1 810	6	10,5	6,5	d_1 + 5	d_1 + 20	8 ± 1,5	V	**2000 VL V**
1 970	**2 020**	1 810	14,3	25	15	d_1 + 10	d_1 + 45	20 ± 4	R	**2000 VA R**

V-ring seals – inch dimensions, globally valid outside North American market

d_1 **0.11 – 2.09** in.

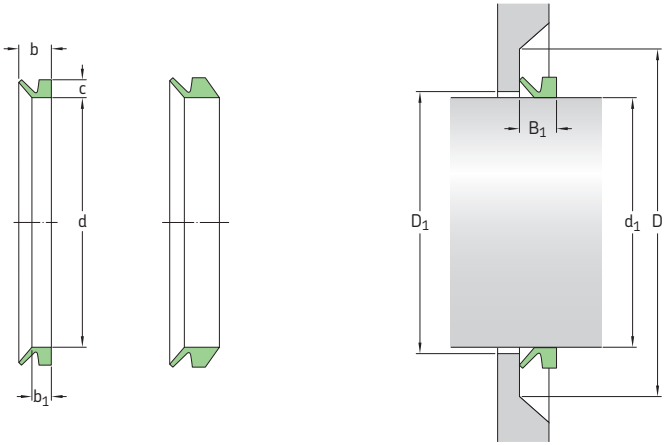

Dimensions Shaft diameter range d_1 over	incl.	Seal inside diameter, free state d	Nominal seal height c	Seal seat width b_1	Nominal seal width b	Clearance D_1 (= d_1 +) max	Counter-face D (= d_1 +) min	Seal fitted width B_1	Lip code	Designation
in.		in.							–	–
0.11	**0.14**	0.10	0.06	0.08	0.12	0.04	0.16	0.10 ± 0.012	R	**3 VA R**
		0.10	0.06	0.08	0.12	0.04	0.16	0.10 ± 0.012	V	**3 VA V**
0.14	**0.18**	0.13	0.08	0.09	0.15	0.04	0.24	0.12 ± 0.016	R	**4 VA R**
		0.13	0.08	0.09	0.15	0.04	0.24	0.12 ± 0.016	V	**4 VA V**
0.18	**0.22**	0.16	0.08	0.09	0.15	0.04	0.24	0.12 ± 0.016	R	**5 VA R**
		0.16	0.08	0.09	0.15	0.04	0.24	0.12 ± 0.016	V	**5 VA V**
		0.16	0.08	0.15	0.20	0.04	0.24	0.18 ± 0.016	R	**5 VS R**
		0.16	0.08	0.15	0.20	0.04	0.24	0.18 ± 0.016	V	**5 VS V**
0.22	**0.26**	0.20	0.08	0.09	0.15	0.04	0.24	0.12 ± 0.016	R	**6 VA R**
		0.20	0.08	0.09	0.15	0.04	0.24	0.12 ± 0.016	V	**6 VA V**
		0.20	0.08	0.15	0.20	0.04	0.24	0.18 ± 0.016	R	**6 VS R**
		0.20	0.08	0.15	0.20	0.04	0.24	0.18 ± 0.016	V	**6 VS V**
0.26	**0.31**	0.24	0.08	0.09	0.15	0.04	0.24	0.12 ± 0.016	R	**7 VA R**
		0.24	0.08	0.09	0.15	0.04	0.24	0.12 ± 0.016	V	**7 VA V**
		0.24	0.08	0.15	0.20	0.04	0.24	0.18 ± 0.016	R	**7 VS R**
		0.24	0.08	0.15	0.20	0.04	0.24	0.18 ± 0.016	V	**7 VS V**
0.31	**0.37**	0.28	0.08	0.09	0.15	0.04	0.24	0.12 ± 0.016	R	**8 VA R**
		0.28	0.08	0.09	0.15	0.04	0.24	0.12 ± 0.016	V	**8 VA V**
		0.28	0.08	0.15	0.20	0.04	0.24	0.18 ± 0.016	R	**8 VS R**
		0.28	0.08	0.15	0.20	0.04	0.24	0.18 ± 0.016	V	**8 VS V**
0.37	**0.45**	0.35	0.12	0.13	0.22	0.04	0.35	0.18 ± 0.02	R	**10 VA R**
		0.35	0.12	0.13	0.22	0.04	0.35	0.18 ± 0.02	V	**10 VA V**
		0.35	0.12	0.22	0.30	0.04	0.35	0.26 ± 0.02	R	**10 VS R**
		0.35	0.12	0.22	0.30	0.04	0.35	0.26 ± 0.02	V	**10 VS V**
0.45	**0.49**	0.41	0.12	0.13	0.22	0.04	0.35	0.18 ± 0.02	R	**12 VA R**
		0.41	0.12	0.13	0.22	0.04	0.35	0.18 ± 0.02	V	**12 VA V**
0.45	**0.53**	0.41	0.12	0.22	0.30	0.04	0.35	0.26 ± 0.02	R	**12 VS R**
		0.41	0.12	0.22	0.30	0.04	0.35	0.26 ± 0.02	V	**12 VS V**
0.49	**0.53**	0.46	0.12	0.13	0.22	0.04	0.35	0.18 ± 0.02	R	**13 VA R**
		0.46	0.12	0.13	0.22	0.04	0.35	0.18 ± 0.02	V	**13 VA V**
0.53	**0.61**	0.49	0.12	0.13	0.22	0.04	0.35	0.18 ± 0.02	R	**14 VA R**
		0.49	0.12	0.13	0.22	0.04	0.35	0.18 ± 0.02	V	**14 VA V**

Dimensions Shaft diameter range d_1 over	incl.	Seal inside diameter, free state d	Nominal seal height c	Seal seat width b_1	Nominal seal width b	Clearance D_1 (= d_1 +) max	Counterface D (= d_1 +) min	Seal fitted width B_1	Lip code	Designation
in.		in.							–	–
0.53	**0.61**	0.49	0.12	0.22	0.30	0.04	0.35	0.26 ± 0.02	R	**14 VS R**
cont.		0.49	0.12	0.22	0.30	0.04	0.35	0.26 ± 0.02	V	**14 VS V**
0.61	**0.67**	0.55	0.12	0.13	0.22	0.04	0.35	0.18 ± 0.02	R	**16 VA R**
		0.55	0.12	0.13	0.22	0.04	0.35	0.18 ± 0.02	V	**16 VA V**
0.61	**0.69**	0.55	0.12	0.22	0.30	0.04	0.35	0.26 ± 0.02	R	**16 VS R**
		0.55	0.12	0.22	0.30	0.04	0.35	0.26 ± 0.02	V	**16 VS V**
0.69	**0.75**	0.63	0.12	0.13	0.22	0.04	0.35	0.18 ± 0.02	R	**18 VA R**
		0.63	0.12	0.13	0.22	0.04	0.35	0.18 ± 0.02	V	**18 VA V**
		0.63	0.12	0.22	0.30	0.04	0.35	0.26 ± 0.02	R	**18 VS R**
		0.63	0.12	0.22	0.30	0.04	0.35	0.26 ± 0.02	V	**18 VS V**
0.75	**0.83**	0.71	0.16	0.19	0.30	0.08	0.47	0.24 ± 0.03	R	**20 VA R**
		0.71	0.16	0.19	0.30	0.08	0.47	0.24 ± 0.03	V	**20 VA V**
		0.71	0.16	0.31	0.41	0.08	0.47	0.35 ± 0.03	R	**20 VS R**
		0.71	0.16	0.31	0.41	0.08	0.47	0.35 ± 0.03	V	**20 VS V**
0.83	**0.94**	0.79	0.16	0.19	0.30	0.08	0.47	0.24 ± 0.03	R	**22 VA R**
		0.79	0.16	0.19	0.30	0.08	0.47	0.24 ± 0.03	V	**22 VA V**
		0.79	0.16	0.31	0.41	0.08	0.47	0.35 ± 0.03	R	**22 VS R**
		0.79	0.16	0.31	0.41	0.08	0.47	0.35 ± 0.03	V	**22 VS V**
0.94	**1.06**	0.87	0.16	0.19	0.30	0.08	0.47	0.24 ± 0.03	R	**25 VA R**
		0.87	0.16	0.19	0.30	0.08	0.47	0.24 ± 0.03	V	**25 VA V**
		0.87	0.16	0.31	0.41	0.08	0.47	0.35 ± 0.03	R	**25 VS R**
		0.87	0.16	0.31	0.41	0.08	0.47	0.35 ± 0.03	V	**25 VS V**
1.06	**1.14**	0.98	0.16	0.19	0.30	0.08	0.47	0.24 ± 0.03	R	**28 VA R**
		0.98	0.16	0.19	0.30	0.08	0.47	0.24 ± 0.03	V	**28 VA V**
		0.98	0.16	0.31	0.41	0.08	0.47	0.35 ± 0.03	R	**28 VS R**
		0.98	0.16	0.31	0.41	0.08	0.47	0.35 ± 0.03	V	**28 VS V**
1.14	**1.22**	1.06	0.16	0.19	0.30	0.08	0.47	0.24 ± 0.03	R	**30 VA R**
		1.06	0.16	0.19	0.30	0.08	0.47	0.24 ± 0.03	V	**30 VA V**
		1.06	0.16	0.31	0.41	0.08	0.47	0.35 ± 0.03	R	**30 VS R**
		1.06	0.16	0.31	0.41	0.08	0.47	0.35 ± 0.03	V	**30 VS V**
1.22	**1.30**	1.14	0.16	0.19	0.30	0.08	0.47	0.24 ± 0.03	R	**32 VA R**
		1.14	0.16	0.19	0.30	0.08	0.47	0.24 ± 0.03	V	**32 VA V**
		1.14	0.16	0.31	0.41	0.08	0.47	0.35 ± 0.03	R	**32 VS R**
		1.14	0.16	0.31	0.41	0.08	0.47	0.35 ± 0.03	V	**32 VS V**
1.30	**1.42**	1.22	0.16	0.19	0.30	0.08	0.47	0.24 ± 0.03	R	**35 VA R**
		1.22	0.16	0.19	0.30	0.08	0.47	0.24 ± 0.03	V	**35 VA V**
		1.22	0.16	0.31	0.41	0.08	0.47	0.35 ± 0.03	R	**35 VS R**
		1.22	0.16	0.31	0.41	0.08	0.47	0.35 ± 0.03	V	**35 VS V**
1.42	**1.50**	1.34	0.16	0.19	0.30	0.08	0.47	0.24 ± 0.03	R	**38 VA R**
		1.34	0.16	0.19	0.30	0.08	0.47	0.24 ± 0.03	V	**38 VA V**
		1.34	0.16	0.31	0.41	0.08	0.47	0.35 ± 0.03	R	**38 VS R**
		1.34	0.16	0.31	0.41	0.08	0.47	0.35 ± 0.03	V	**38 VS V**
1.50	**1.69**	1.42	0.20	0.22	0.35	0.08	0.59	0.28 ± 0.04	R	**40 VA R**
		1.42	0.20	0.22	0.35	0.08	0.59	0.28 ± 0.04	V	**40 VA V**
		1.42	0.20	0.37	0.51	0.08	0.59	0.43 ± 0.04	R	**40 VS R**
		1.42	0.20	0.37	0.51	0.08	0.59	0.43 ± 0.04	V	**40 VS V**
1.69	**1.89**	1.57	0.20	0.22	0.35	0.08	0.59	0.28 ± 0.04	R	**45 VA R**
		1.57	0.20	0.22	0.35	0.08	0.59	0.28 ± 0.04	V	**45 VA V**
		1.57	0.20	0.37	0.51	0.08	0.59	0.43 ± 0.04	R	**45 VS R**
		1.57	0.20	0.37	0.51	0.08	0.59	0.43 ± 0.04	V	**45 VS V**
1.89	**2.09**	1.77	0.20	0.22	0.35	0.08	0.59	0.28 ± 0.04	R	**50 VA R**
		1.77	0.20	0.22	0.35	0.08	0.59	0.28 ± 0.04	V	**50 VA V**
		1.77	0.20	0.37	0.51	0.08	0.59	0.43 ± 0.04	R	**50 VS R**
		1.77	0.20	0.37	0.51	0.08	0.59	0.43 ± 0.04	V	**50 VS V**

V-ring seals – inch dimensions, globally valid outside North American market

d_1 **2.09 – 7.68** in.

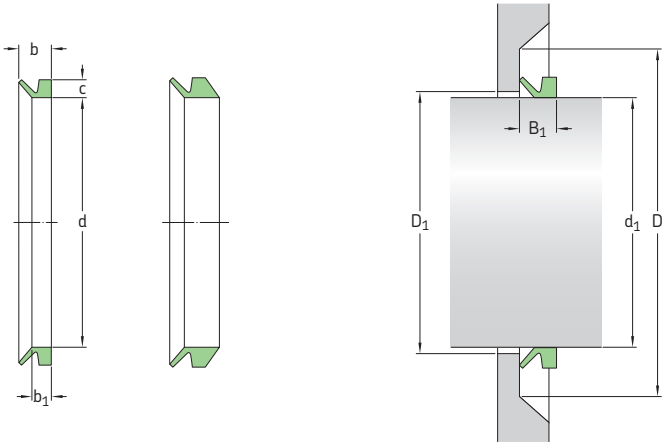

Dimensions Shaft diameter range d_1 over	incl.	Seal inside diameter, free state d	Nominal seal height c	Seal seat width b_1	Nominal seal width b	Clearance D_1 (= d_1 +) max	Counterface D (= d_1 +) min	Seal fitted width B_1	Lip code	Designation
in.		in.							–	–
2.09	**2.28**	1.93	0.20	0.22	0.35	0.08	0.59	0.28 ± 0.04	R	**55 VA R**
		1.93	0.20	0.22	0.35	0.08	0.59	0.28 ± 0.04	V	**55 VA V**
		1.93	0.20	0.37	0.51	0.08	0.59	0.43 ± 0.04	R	**55 VS R**
		1.93	0.20	0.37	0.51	0.08	0.59	0.43 ± 0.04	V	**55 VS V**
2.28	**2.48**	2.13	0.20	0.22	0.35	0.08	0.59	0.28 ± 0.04	R	**60 VA R**
		2.13	0.20	0.22	0.35	0.08	0.59	0.28 ± 0.04	V	**60 VA V**
		2.13	0.20	0.37	0.51	0.08	0.59	0.43 ± 0.04	R	**60 VS R**
		2.13	0.20	0.37	0.51	0.08	0.59	0.43 ± 0.04	V	**60 VS V**
2.48	**2.68**	2.28	0.20	0.22	0.35	0.08	0.59	0.28 ± 0.04	R	**65 VA R**
		2.28	0.20	0.22	0.35	0.08	0.59	0.28 ± 0.04	V	**65 VA V**
		2.28	0.20	0.37	0.51	0.08	0.59	0.43 ± 0.04	R	**65 VS R**
		2.28	0.20	0.37	0.51	0.08	0.59	0.43 ± 0.04	V	**65 VS V**
2.68	**2.87**	2.48	0.24	0.27	0.43	0.12	0.71	0.35 ± 0.05	R	**70 VA R**
		2.48	0.24	0.27	0.43	0.12	0.71	0.35 ± 0.05	V	**70 VA V**
		2.48	0.24	0.44	0.61	0.12	0.71	0.53 ± 0.05	R	**70 VS R**
		2.48	0.24	0.44	0.61	0.12	0.71	0.53 ± 0.05	V	**70 VS V**
2.87	**3.07**	2.64	0.24	0.27	0.43	0.12	0.71	0.35 ± 0.05	R	**75 VA R**
		2.64	0.24	0.27	0.43	0.12	0.71	0.53 ± 0.05	R	**75 VS R**
		2.64	0.24	0.44	0.61	0.12	0.71	0.53 ± 0.05	V	**75 VS V**
3.07	**3.27**	2.83	0.24	0.27	0.43	0.12	0.71	0.35 ± 0.05	R	**80 VA R**
		2.83	0.24	0.27	0.43	0.12	0.71	0.35 ± 0.05	V	**80 VA V**
		2.83	0.24	0.44	0.61	0.12	0.71	0.53 ± 0.05	R	**80 VS R**
		2.83	0.24	0.44	0.61	0.12	0.71	0.53 ± 0.05	V	**80 VS V**
3.27	**3.46**	2.99	0.24	0.27	0.43	0.12	0.71	0.35 ± 0.05	R	**85 VA R**
		2.99	0.24	0.27	0.43	0.12	0.71	0.35 ± 0.05	V	**85 VA V**
		2.99	0.24	0.44	0.61	0.12	0.71	0.53 ± 0.05	R	**85 VS R**
		2.99	0.24	0.44	0.61	0.12	0.71	0.53 ± 0.05	V	**85 VS V**
3.46	**3.66**	3.19	0.24	0.27	0.43	0.12	0.71	0.35 ± 0.05	R	**90 VA R**
		3.19	0.24	0.27	0.43	0.12	0.71	0.35 ± 0.05	V	**90 VA V**
		3.19	0.24	0.44	0.61	0.12	0.71	0.53 ± 0.05	R	**90 VS R**
		3.19	0.24	0.44	0.61	0.12	0.71	0.53 ± 0.05	V	**90 VS V**
3.66	**3.86**	3.35	0.24	0.27	0.43	0.12	0.71	0.35 ± 0.05	R	**95 VA R**
		3.35	0.24	0.27	0.43	0.12	0.71	0.35 ± 0.05	V	**95 VA V**
		3.35	0.24	0.44	0.61	0.12	0.71	0.53 ± 0.05	R	**95 VS R**
		3.35	0.24	0.44	0.61	0.12	0.71	0.53 ± 0.05	V	**95 VS V**

Dimensions									Lip code	Designation
Shaft diameter range d_1 over	incl.	Seal inside diameter, free state d	Nominal seal height c	Seal seat width b_1	Nominal seal width b	Clearance D_1 (= d_1 +) max	Counterface D (= d_1 +) min	Seal fitted width B_1		
in.		in.							–	–
3.86	**4.13**	3.54	0.24	0.27	0.43	0.12	0.71	0.35 ± 0.05	R	**100 VA R**
		3.54	0.24	0.27	0.43	0.12	0.71	0.35 ± 0.05	V	**100 VA V**
		3.54	0.24	0.44	0.61	0.12	0.71	0.53 ± 0.05	R	**100 VS R**
		3.54	0.24	0.44	0.61	0.12	0.71	0.53 ± 0.05	V	**100 VS V**
4.13	**4.53**	3.90	0.26	0.24	0.41	0.20	0.79	0.31 ± 0.06	R	**110 VL R**
		3.90	0.26	0.24	0.41	0.20	0.79	0.31 ± 0.06	V	**110 VL V**
		3.90	0.28	0.31	0.50	0.16	0.83	0.41 ± 0.06	R	**110 VA R**
		3.90	0.28	0.31	0.50	0.16	0.83	0.41 ± 0.06	V	**110 VA V**
		3.90	0.28	0.52	0.71	0.16	0.83	0.61 ± 0.06	R	**110 VS R**
		3.90	0.28	0.52	0.71	0.16	0.83	0.61 ± 0.06	V	**110 VS V**
4.53	**4.92**	4.25	0.26	0.24	0.41	0.20	0.79	0.31 ± 0.06	R	**120 VL R**
		4.25	0.26	0.24	0.41	0.20	0.79	0.31 ± 0.06	V	**120 VL V**
		4.25	0.28	0.31	0.50	0.16	0.83	0.41 ± 0.06	R	**120 VA R**
		4.25	0.28	0.31	0.50	0.16	0.83	0.41 ± 0.06	V	**120 VA V**
		4.25	0.28	0.52	0.71	0.16	0.83	0.61 ± 0.06	R	**120 VS R**
		4.25	0.28	0.52	0.71	0.16	0.83	0.61 ± 0.06	V	**120 VS V**
4.92	**5.31**	4.61	0.26	0.24	0.41	0.20	0.79	0.31 ± 0.06	R	**130 VL R**
		4.61	0.26	0.24	0.41	0.20	0.79	0.31 ± 0.06	V	**130 VL V**
		4.61	0.28	0.31	0.50	0.16	0.83	0.41 ± 0.06	R	**130 VA R**
		4.61	0.28	0.31	0.50	0.16	0.83	0.41 ± 0.06	V	**130 VA V**
		4.61	0.28	0.52	0.71	0.16	0.83	0.61 ± 0.06	R	**130 VS R**
		4.61	0.28	0.52	0.71	0.16	0.83	0.61 ± 0.06	V	**130 VS V**
5.31	**5.71**	4.96	0.26	0.24	0.41	0.20	0.79	0.31 ± 0.06	R	**140 VL R**
		4.96	0.26	0.24	0.41	0.20	0.79	0.31 ± 0.06	V	**140 VL V**
		4.96	0.28	0.31	0.50	0.16	0.83	0.41 ± 0.06	R	**140 VA R**
		4.96	0.28	0.31	0.50	0.16	0.83	0.41 ± 0.06	V	**140 VA V**
		4.96	0.28	0.52	0.71	0.16	0.83	0.61 ± 0.06	R	**140 VS R**
		4.96	0.28	0.52	0.71	0.16	0.83	0.61 ± 0.06	V	**140 VS V**
5.71	**6.10**	5.31	0.26	0.24	0.41	0.20	0.79	0.31 ± 0.06	R	**150 VL R**
		5.31	0.26	0.24	0.41	0.20	0.79	0.31 ± 0.06	V	**150 VL V**
		5.31	0.28	0.31	0.50	0.16	0.83	0.41 ± 0.06	R	**150 VA R**
		5.31	0.28	0.31	0.50	0.16	0.83	0.41 ± 0.06	V	**150 VA V**
		5.31	0.28	0.52	0.71	0.16	0.83	0.61 ± 0.06	R	**150 VS R**
		5.31	0.28	0.52	0.71	0.16	0.83	0.61 ± 0.06	V	**150 VS V**
6.10	**6.50**	5.67	0.26	0.24	0.41	0.20	0.79	0.31 ± 0.06	R	**160 VL R**
		5.67	0.26	0.24	0.41	0.20	0.79	0.31 ± 0.06	V	**160 VL V**
		5.67	0.31	0.35	0.57	0.16	0.94	0.47 ± 0.07	R	**160 VA R**
		5.67	0.31	0.35	0.57	0.16	0.94	0.47 ± 0.07	V	**160 VA V**
		5.67	0.31	0.59	0.81	0.16	0.94	0.71 ± 0.07	R	**160 VS R**
		5.67	0.31	0.59	0.81	0.16	0.94	0.71 ± 0.07	V	**160 VS V**
6.50	**6.89**	6.02	0.26	0.24	0.41	0.20	0.79	0.31 ± 0.06	R	**170 VL R**
		6.02	0.26	0.24	0.41	0.20	0.79	0.31 ± 0.06	V	**170 VL V**
		6.02	0.31	0.35	0.57	0.16	0.94	0.47 ± 0.07	R	**170 VA R**
		6.02	0.31	0.35	0.57	0.16	0.94	0.47 ± 0.07	V	**170 VA V**
		6.02	0.31	0.59	0.81	0.16	0.94	0.71 ± 0.07	R	**170 VS R**
		6.02	0.31	0.59	0.81	0.16	0.94	0.71 ± 0.07	V	**170 VS V**
6.89	**7.28**	6.38	0.26	0.24	0.41	0.20	0.79	0.31 ± 0.06	R	**180 VL R**
		6.38	0.26	0.24	0.41	0.20	0.79	0.31 ± 0.06	V	**180 VL V**
		6.38	0.31	0.35	0.57	0.16	0.94	0.47 ± 0.07	R	**180 VA R**
		6.38	0.31	0.35	0.57	0.16	0.94	0.47 ± 0.07	V	**180 VA V**
		6.38	0.31	0.59	0.81	0.16	0.94	0.71 ± 0.07	R	**180 VS R**
		6.38	0.31	0.59	0.81	0.16	0.94	0.71 ± 0.07	V	**180 VS V**
7.28	**7.68**	6.73	0.26	0.24	0.41	0.20	0.79	0.31 ± 0.06	R	**190 VL R**
		6.73	0.26	0.24	0.41	0.20	0.79	0.31 ± 0.06	V	**190 VL V**
		6.73	0.31	0.35	0.57	0.16	0.94	0.47 ± 0.07	R	**190 VA R**
		6.73	0.31	0.35	0.57	0.16	0.94	0.47 ± 0.07	V	**190 VA V**
		6.73	0.31	0.59	0.81	0.16	0.94	0.71 ± 0.07	R	**190 VS R**
		6.73	0.31	0.59	0.81	0.16	0.94	0.71 ± 0.07	V	**190 VS V**

V-ring seals – inch dimensions, globally valid outside North American market
d_1 **7.48 – 15.55** in.

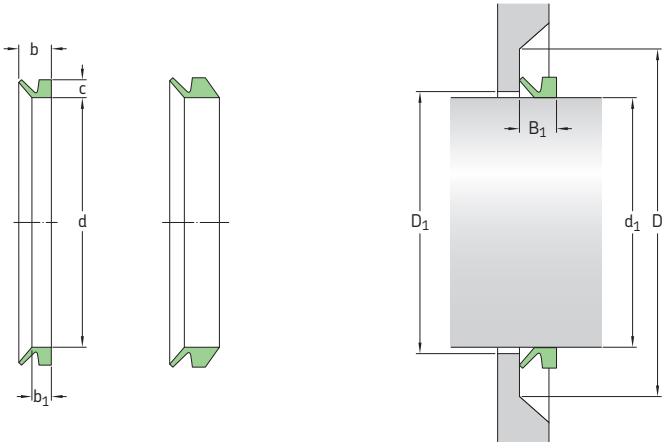

Dimensions Shaft diameter range d_1 over	incl.	Seal inside diameter, free state d	Nominal seal height c	Seal seat width b_1	Nominal seal width b	Clearance D_1 (= d_1 +) max	Counterface D (= d_1 +) min	Seal fitted width B_1	Lip code	Designation
in.		in.							–	–
7.68	**8.27**	7.17	0.26	0.24	0.41	0.20	0.79	0.31 ± 0.06	R	**200 VL R**
		7.17	0.26	0.24	0.41	0.20	0.79	0.31 ± 0.06	V	**200 VL V**
		7.09	0.31	0.35	0.57	0.16	0.94	0.47 ± 0.07	R	**199 VA R**
		7.09	0.31	0.35	0.57	0.16	0.94	0.47 ± 0.07	V	**199 VA V**
		7.09	0.31	0.59	0.81	0.16	0.94	0.71 ± 0.07	R	**199 VS R**
		7.09	0.31	0.59	0.81	0.16	0.94	0.71 ± 0.07	V	**199 VS V**
7.48	**8.27**	7.09	0.59	0.56	0.98	0.39	1.77	0.79 ± 0.16	R	**200 VA R**
		7.09	0.59	0.56	0.98	0.39	1.77	0.79 ± 0.16	V	**200 VA V**
8.27	**9.17**	7.80	0.26	0.24	0.41	0.20	0.79	0.31 ± 0.06	R	**220 VL R**
		7.80	0.26	0.24	0.41	0.20	0.79	0.31 ± 0.06	V	**220 VL V**
		7.80	0.59	0.56	0.98	0.39	1.77	0.79 ± 0.16	R	**220 VA R**
		7.80	0.59	0.56	0.98	0.39	1.77	0.79 ± 0.16	V	**220 VA V**
9.17	**10.24**	8.86	0.26	0.24	0.41	0.20	0.79	0.31 ± 0.06	R	**250 VL R**
		8.86	0.26	0.24	0.41	0.20	0.79	0.31 ± 0.06	V	**250 VL V**
9.25	**10.43**	8.86	0.59	0.56	0.98	0.39	1.77	0.79 ± 0.16	R	**250 VA R**
		8.86	0.59	0.56	0.98	0.39	1.77	0.79 ± 0.16	V	**250 VA V**
10.24	**11.22**	9.72	0.26	0.24	0.41	0.20	0.79	0.31 ± 0.06	R	**275 VL R**
		9.72	0.26	0.24	0.41	0.20	0.79	0.31 ± 0.06	V	**275 VL V**
10.43	**11.42**	9.72	0.59	0.56	0.98	0.39	1.77	0.79 ± 0.16	R	**275 VA R**
		9.72	0.59	0.56	0.98	0.39	1.77	0.79 ± 0.16	V	**275 VA V**
11.22	**12.20**	10.63	0.26	0.24	0.41	0.20	0.79	0.31 ± 0.06	R	**300 VL R**
		10.63	0.26	0.24	0.41	0.20	0.79	0.31 ± 0.06	V	**300 VL V**
11.42	**12.20**	10.63	0.59	0.56	0.98	0.39	1.77	0.79 ± 0.16	R	**300 VA R**
		10.63	0.59	0.56	0.98	0.39	1.77	0.79 ± 0.16	V	**300 VA V**
11.81	**12.01**	11.57	1.18	1.28	2.56	0.94	4.53	1.97 ± 0.47	R	**300 VE R**
		11.57	0.83	1.28	2.56	0.94	4.53	1.97 ± 0.47	R	**300 VRME R**
12.01	**12.20**	11.77	1.18	1.28	2.56	0.94	4.53	1.97 ± 0.47	R	**305 VE R**
		11.77	0.83	1.28	2.56	0.94	4.53	1.97 ± 0.47	R	**305 VRME R**
12.20	**13.19**	11.50	0.26	0.24	0.41	0.20	0.79	0.31 ± 0.06	R	**325 VL R**
		11.50	0.26	0.24	0.41	0.20	0.79	0.31 ± 0.06	V	**325 VL V**
		11.50	0.59	0.56	0.98	0.39	1.77	0.79 ± 0.16	R	**325 VA R**

Dimensions									Lip code	Designation
Shaft diameter range d_1 over	incl.	Seal inside diameter, free state d	Nominal seal height c	Seal seat width b_1	Nominal seal width b	Clearance D_1 (= d_1 +) max	Counterface D (= d_1 +) min	Seal fitted width B_1		
in.		in.							–	–
12.20 cont.	**13.19**	11.50	0.59	0.56	0.98	0.39	1.77	0.79 ± 0.16	V	**325 VA V**
		11.97	1.18	1.28	2.56	0.94	4.53	1.97 ± 0.47	R	**310 VE R**
		11.97	0.83	1.28	2.56	0.94	4.53	1.97 ± 0.47	R	**310 VRME R**
12.40	**12.60**	12.17	1.18	1.28	2.56	0.94	4.53	1.97 ± 0.47	R	**315 VE R**
		12.17	0.83	1.28	2.56	0.94	4.53	1.97 ± 0.47	R	**315 VRME R**
12.60	**12.80**	12.36	1.18	1.28	2.56	0.94	4.53	1.97 ± 0.47	R	**320 VE R**
		12.36	0.83	1.28	2.56	0.94	4.53	1.97 ± 0.47	R	**320 VRME R**
12.80	**12.99**	12.56	1.18	1.28	2.56	0.94	4.53	1.97 ± 0.47	R	**325 VE R**
		12.56	0.83	1.28	2.56	0.94	4.53	1.97 ± 0.47	R	**325 VRME R**
12.99	**13.19**	12.72	1.18	1.28	2.56	0.94	4.53	1.97 ± 0.47	R	**330 VE R**
		12.72	0.83	1.28	2.56	0.94	4.53	1.97 ± 0.47	R	**330 VRME R**
13.19	**14.37**	12.40	0.26	0.24	0.41	0.20	0.79	0.31 ± 0.06	R	**350 VL R**
		12.40	0.26	0.24	0.41	0.20	0.79	0.31 ± 0.06	V	**350 VL V**
		12.40	0.59	0.56	0.98	0.39	1.77	0.79 ± 0.16	R	**350 VA R**
		12.40	0.59	0.56	0.98	0.39	1.77	0.79 ± 0.16	V	**350 VA V**
13.19	**13.39**	12.91	1.18	1.28	2.56	0.94	4.53	1.97 ± 0.47	R	**335 VE R**
		12.91	0.83	1.28	2.56	0.94	4.53	1.97 ± 0.47	R	**335 VRME R**
13.39	**13.58**	13.11	1.18	1.28	2.56	0.94	4.53	1.97 ± 0.47	R	**340 VE R**
		12.91	0.83	1.28	2.56	0.94	4.53	1.97 ± 0.47	R	**340 VRME R**
13.58	**13.78**	13.31	1.18	1.28	2.56	0.94	4.53	1.97 ± 0.47	R	**345 VE R**
		13.31	0.83	1.28	2.56	0.94	4.53	1.97 ± 0.47	R	**345 VRME R**
13.78	**13.98**	13.50	1.18	1.28	2.56	0.94	4.53	1.97 ± 0.47	R	**350 VE R**
		13.50	0.83	1.28	2.56	0.94	4.53	1.97 ± 0.47	R	**350 VRME R**
13.98	**14.17**	13.66	1.18	1.28	2.56	0.94	4.53	1.97 ± 0.47	R	**355 VE R**
		13.66	0.83	1.28	2.56	0.94	4.53	1.97 ± 0.47	R	**355 VRME R**
14.17	**14.37**	13.86	1.18	1.28	2.56	0.94	4.53	1.97 ± 0.47	R	**360 VE R**
		14.06	0.83	1.28	2.56	0.94	4.53	1.97 ± 0.47	R	**360 VRME R**
14.37	**15.16**	13.27	0.26	0.24	0.41	0.20	0.79	0.31 ± 0.06	R	**375 VL R**
		13.27	0.26	0.24	0.41	0.20	0.79	0.31 ± 0.06	V	**375 VL V**
14.37	**15.35**	13.27	0.59	0.56	0.98	0.39	1.77	0.79 ± 0.16	R	**375 VA R**
		13.27	0.59	0.56	0.98	0.39	1.77	0.79 ± 0.16	V	**375 VA V**
14.37	**14.57**	14.06	1.18	1.28	2.56	0.94	4.53	1.97 ± 0.47	R	**365 VE R**
14.57	**14.76**	14.25	1.18	1.28	2.56	0.94	4.53	1.97 ± 0.47	R	**370 VE R**
		14.25	0.83	1.28	2.56	0.94	4.53	1.97 ± 0.47	R	**370 VRME R**
14.76	**14.96**	14.45	1.18	1.28	2.56	0.94	4.53	1.97 ± 0.47	R	**375 VE R**
		14.45	0.83	1.28	2.56	0.94	4.53	1.97 ± 0.47	R	**375 VRME R**
14.96	**15.16**	14.61	1.18	1.28	2.56	0.94	4.53	1.97 ± 0.47	R	**380 VE R**
		14.61	0.83	1.28	2.56	0.94	4.53	1.97 ± 0.47	R	**380 VRME R**
15.16	**16.14**	14.17	0.26	0.24	0.41	0.20	0.79	0.31 ± 0.06	R	**400 VL R**
		14.17	0.26	0.24	0.41	0.20	0.79	0.31 ± 0.06	V	**400 VL V**
15.35	**16.93**	14.17	0.59	0.56	0.98	0.39	1.77	0.79 ± 0.16	R	**400 VA R**
		14.17	0.59	0.56	0.98	0.39	1.77	0.79 ± 0.16	V	**400 VA V**
15.16	**15.35**	14.80	1.18	1.28	2.56	0.94	4.53	1.97 ± 0.47	R	**385 VE R**
		14.80	0.83	1.28	2.56	0.94	4.53	1.97 ± 0.47	R	**385 VRME R**
15.35	**15.55**	15.00	1.18	1.28	2.56	0.94	4.53	1.97 ± 0.47	R	**390 VE R**
		15.00	0.83	1.28	2.56	0.94	4.53	1.97 ± 0.47	R	**390 VRME R**

V-ring seals – inch dimensions, globally valid outside North American market
d_1 **15.55 – 21.26** in.

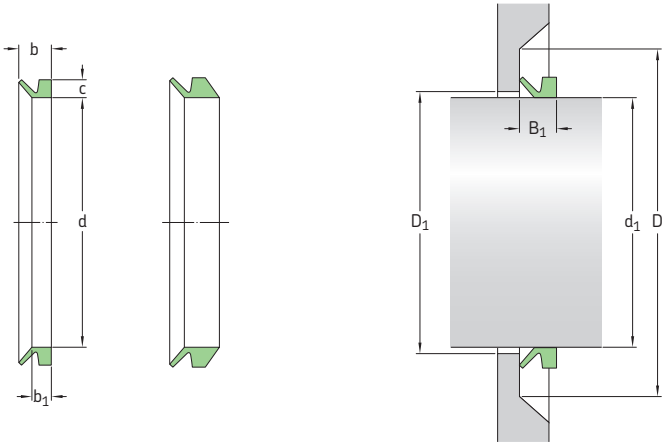

Dimensions Shaft diameter range d_1 over	 incl.	Seal inside diameter, free state d	Nominal seal height c	Seal seat width b_1	Nominal seal width b	Clearance D_1 (= d_1 +) max	Counterface D (= d_1 +) min	Seal fitted width B_1	Lip code	Designation
in.		in.							–	–
15.55	**15.75**	15.20	1.18	1.28	2.56	0.94	4.53	1.97 ± 0.47	R	**395 VE R**
		15.20	0.83	1.28	2.56	0.94	4.53	1.97 ± 0.47	R	**395 VRME R**
15.75	**15.94**	15.39	1.18	1.28	2.56	0.94	4.53	1.97 ± 0.47	R	**400 VE R**
		15.39	0.83	1.28	2.56	0.94	4.53	1.97 ± 0.47	R	**400 VRME R**
15.94	**16.14**	15.59	1.18	1.28	2.56	0.94	4.53	1.97 ± 0.47	R	**405 VE R**
		15.59	0.83	1.28	2.56	0.94	4.53	1.97 ± 0.47	R	**405 VRME R**
16.14	**16.34**	15.79	1.18	1.28	2.56	0.94	4.53	1.97 ± 0.47	R	**410 VE R**
		15.79	0.83	1.28	2.56	0.94	4.53	1.97 ± 0.47	R	**410 VRME R**
16.34	**16.54**	15.94	1.18	1.28	2.56	0.94	4.53	1.97 ± 0.47	R	**415 VE R**
		15.94	0.83	1.28	2.56	0.94	4.53	1.97 ± 0.47	R	**415 VRME R**
16.54	**16.73**	16.14	1.18	1.28	2.56	0.94	4.53	1.97 ± 0.47	R	**420 VE R**
		16.14	0.83	1.28	2.56	0.94	4.53	1.97 ± 0.47	R	**420 VRME R**
16.73	**16.93**	16.34	1.18	1.28	2.56	0.94	4.53	1.97 ± 0.47	R	**425 VE R**
		16.34	0.83	1.28	2.56	0.94	4.53	1.97 ± 0.47	R	**425 VRME R**
16.14	**17.32**	15.04	0.26	0.24	0.41	0.20	0.79	0.31 ± 0.06	R	**425 VL R**
		15.04	0.26	0.24	0.41	0.20	0.79	0.31 ± 0.06	V	**425 VL V**
17.32	**18.70**	15.94	0.26	0.24	0.41	0.20	0.79	0.31 ± 0.06	R	**450 VL R**
		15.94	0.26	0.24	0.41	0.20	0.79	0.31 ± 0.06	V	**450 VL V**
16.93	**18.90**	15.94	0.59	0.56	0.98	0.39	1.77	0.79 ± 0.16	R	**450 VA R**
		15.94	0.59	0.56	0.98	0.39	1.77	0.79 ± 0.16	V	**450 VA V**
16.93	**17.13**	16.54	1.18	1.28	2.56	0.94	4.53	1.97 ± 0.47	R	**430 VE R**
		16.54	0.83	1.28	2.56	0.94	4.53	1.97 ± 0.47	R	**430 VRME R**
17.13	**17.32**	16.73	1.18	1.28	2.56	0.94	4.53	1.97 ± 0.47	R	**435 VE R**
		16.73	0.83	1.28	2.56	0.94	4.53	1.97 ± 0.47	R	**435 VRME R**
17.32	**17.52**	16.89	1.18	1.28	2.56	0.94	4.53	1.97 ± 0.47	R	**440 VE R**
		16.89	0.83	1.28	2.56	0.94	4.53	1.97 ± 0.47	R	**440 VRME R**
17.52	**17.72**	17.09	1.18	1.28	2.56	0.94	4.53	1.97 ± 0.47	R	**445 VE R**
		17.09	0.83	1.28	2.56	0.94	4.53	1.97 ± 0.47	R	**445 VRME R**

Dimensions Shaft diameter range d_1 over	incl.	Seal inside diameter, free state d	Nominal seal height c	Seal seat width b_1	Nominal seal width b	Clearance D_1 (= d_1 +) max	Counterface D (= d_1 +) min	Seal fitted width B_1	Lip code	Designation
in.		in.							–	–
17.72	**17.91**	17.28	1.18	1.28	2.56	0.94	4.53	1.97 ± 0.47	R	**450 VE R**
		17.28	0.83	1.28	2.56	0.94	4.53	1.97 ± 0.47	R	**450 VRME R**
17.91	**18.11**	17.48	1.18	1.28	2.56	0.94	4.53	1.97 ± 0.47	R	**455 VE R**
		17.48	0.83	1.28	2.56	0.94	4.53	1.97 ± 0.47	R	**455 VRME R**
18.11	**18.31**	17.64	1.18	1.28	2.56	0.94	4.53	1.97 ± 0.47	R	**460 VE R**
		17.64	0.83	1.28	2.56	0.94	4.53	1.97 ± 0.47	R	**460 VRME R**
18.31	**18.50**	17.83	1.18	1.28	2.56	0.94	4.53	1.97 ± 0.47	R	**465 VE R**
		17.83	0.83	1.28	2.56	0.94	4.53	1.97 ± 0.47	R	**465 VRME R**
18.50	**18.70**	18.03	1.18	1.28	2.56	0.94	4.53	1.97 ± 0.47	R	**470 VE R**
		18.03	0.83	1.28	2.56	0.94	4.53	1.97 ± 0.47	R	**470 VRME R**
18.70	**18.90**	18.23	1.18	1.28	2.56	0.94	4.53	1.97 ± 0.47	R	**475 VE R**
		18.23	0.83	1.28	2.56	0.94	4.53	1.97 ± 0.47	R	**475 VRME R**
18.70	**20.08**	17.72	0.26	0.24	0.41	0.20	0.79	0.31 ± 0.06	R	**500 VL R**
		17.72	0.26	0.24	0.41	0.20	0.79	0.31 ± 0.06	V	**500 VL V**
20.08	**21.26**	18.58	0.26	0.24	0.41	0.20	0.79	0.31 ± 0.06	R	**525 VL R**
		18.58	0.26	0.24	0.41	0.20	0.79	0.31 ± 0.06	V	**525 VL V**
18.90	**20.87**	17.72	0.59	0.56	0.98	0.39	1.77	0.79 ± 0.16	R	**500 VA R**
		17.72	0.59	0.56	0.98	0.39	1.77	0.79 ± 0.16	V	**500 VA V**
18.90	**19.09**	18.43	1.18	1.28	2.56	0.94	4.53	1.97 ± 0.47	R	**480 VE R**
		18.43	0.83	1.28	2.56	0.94	4.53	1.97 ± 0.47	R	**480 VRME R**
19.09	**19.29**	18.62	1.18	1.28	2.56	0.94	4.53	1.97 ± 0.47	R	**485 VE R**
		18.62	0.83	1.28	2.56	0.94	4.53	1.97 ± 0.47	R	**485 VRME R**
19.29	**19.49**	18.82	1.18	1.28	2.56	0.94	4.53	1.97 ± 0.47	R	**490 VE R**
		18.82	0.83	1.28	2.56	0.94	4.53	1.97 ± 0.47	R	**490 VRME R**
19.49	**19.69**	19.02	1.18	1.28	2.56	0.94	4.53	1.97 ± 0.47	R	**495 VE R**
		19.02	0.83	1.28	2.56	0.94	4.53	1.97 ± 0.47	R	**495 VRME R**
19.69	**19.88**	19.21	1.18	1.28	2.56	0.94	4.53	1.97 ± 0.47	R	**500 VE R**
		19.21	0.83	1.28	2.56	0.94	4.53	1.97 ± 0.47	R	**500 VRME R**
19.88	**20.08**	19.41	1.18	1.28	2.56	0.94	4.53	1.97 ± 0.47	R	**505 VE R**
		19.41	0.83	1.28	2.56	0.94	4.53	1.97 ± 0.47	R	**505 VRME R**
20.08	**20.28**	19.57	1.18	1.28	2.56	0.94	4.53	1.97 ± 0.47	R	**510 VE R**
		19.57	0.83	1.28	2.56	0.94	4.53	1.97 ± 0.47	R	**510 VRME R**
20.28	**20.47**	19.76	1.18	1.28	2.56	0.94	4.53	1.97 ± 0.47	R	**515 VE R**
		19.76	0.83	1.28	2.56	0.94	4.53	1.97 ± 0.47	R	**515 VRME R**
20.47	**20.67**	19.96	1.18	1.28	2.56	0.94	4.53	1.97 ± 0.47	R	**520 VE R**
		19.96	0.83	1.28	2.56	0.94	4.53	1.97 ± 0.47	R	**520 VRME R**
20.67	**20.87**	20.16	1.18	1.28	2.56	0.94	4.53	1.97 ± 0.47	R	**525 VE R**
		20.16	0.83	1.28	2.56	0.94	4.53	1.97 ± 0.47	R	**525 VRME R**
21.26	**22.64**	19.49	0.26	0.24	0.41	0.20	0.79	0.31 ± 0.06	R	**550 VL R**
		19.49	0.26	0.24	0.41	0.20	0.79	0.31 ± 0.06	V	**550 VL V**
20.87	**22.83**	19.49	0.59	0.56	0.98	0.39	1.77	0.79 ± 0.16	R	**550 VA R**
		19.49	0.59	0.56	0.98	0.39	1.77	0.79 ± 0.16	V	**550 VA V**
20.87	**21.06**	20.35	1.18	1.28	2.56	0.94	4.53	1.97 ± 0.47	R	**530 VE R**
		20.35	0.83	1.28	2.56	0.94	4.53	1.97 ± 0.47	R	**530 VRME R**
21.06	**21.26**	20.51	1.18	1.28	2.56	0.94	4.53	1.97 ± 0.47	R	**535 VE R**
		20.51	0.83	1.28	2.56	0.94	4.53	1.97 ± 0.47	R	**535 VRME R**

V-ring seals – inch dimensions, globally valid outside North American market

d_1 **21.26 – 29.84** in.

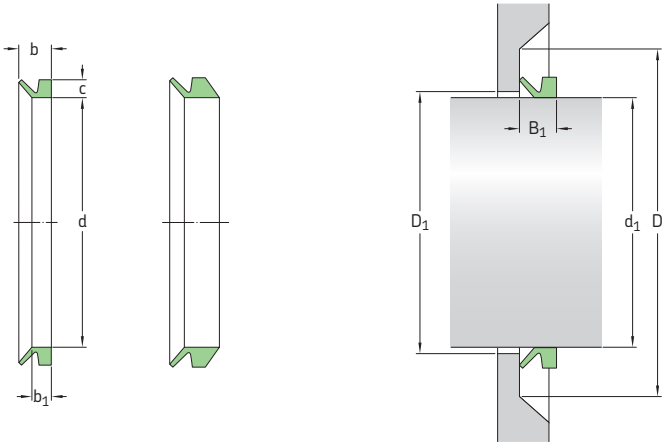

Dimensions Shaft diameter range d_1 over	incl.	Seal inside diameter, free state d	Nominal seal height c	Seal seat width b_1	Nominal seal width b	Clearance D_1 (= d_1 +) max	Counterface D (= d_1 +) min	Seal fitted width B_1	Lip code	Designation
in.		in.							–	–
21.26	**21.46**	20.71	1.18	1.28	2.56	0.94	4.53	1.97 ± 0.47	R	**540 VE R**
		20.71	0.83	1.28	2.56	0.94	4.53	1.97 ± 0.47	R	**540 VRME R**
21.46	**21.65**	20.91	1.18	1.28	2.56	0.94	4.53	1.97 ± 0.47	R	**545 VE R**
		20.91	0.83	1.28	2.56	0.94	4.53	1.97 ± 0.47	R	**545 VRME R**
21.65	**21.85**	21.10	1.18	1.28	2.56	0.94	4.53	1.97 ± 0.47	R	**550 VE R**
		21.10	0.83	1.28	2.56	0.94	4.53	1.97 ± 0.47	R	**550 VRME R**
21.85	**22.05**	21.30	1.18	1.28	2.56	0.94	4.53	1.97 ± 0.47	R	**555 VE R**
		21.30	0.83	1.28	2.56	0.94	4.53	1.97 ± 0.47	R	**555 VRME R**
22.05	**22.24**	21.50	1.18	1.28	2.56	0.94	4.53	1.97 ± 0.47	R	**560 VE R**
		21.50	0.83	1.28	2.56	0.94	4.53	1.97 ± 0.47	R	**560 VRME R**
22.24	**22.44**	21.65	1.18	1.28	2.56	0.94	4.53	1.97 ± 0.47	R	**565 VE R**
		21.65	0.83	1.28	2.56	0.94	4.53	1.97 ± 0.47	R	**565 VRME R**
22.44	**22.64**	21.85	1.18	1.28	2.56	0.94	4.53	1.97 ± 0.47	R	**570 VE R**
		21.85	0.83	1.28	2.56	0.94	4.53	1.97 ± 0.47	R	**570 VRME R**
22.64	**22.83**	22.05	1.18	1.28	2.56	0.94	4.53	1.97 ± 0.47	R	**575 VE R**
		22.05	0.83	1.28	2.56	0.94	4.53	1.97 ± 0.47	R	**575 VRME R**
22.64	**24.61**	21.26	0.26	0.24	0.41	0.20	0.79	0.31 ± 0.06	R	**600 VL R**
		21.26	0.26	0.24	0.41	0.20	0.79	0.31 ± 0.06	V	**600 VL V**
22.83	**24.80**	21.26	0.59	0.56	0.98	0.39	1.77	0.79 ± 0.16	R	**600 VA R**
		21.26	0.59	0.56	0.98	0.39	1.77	0.79 ± 0.16	V	**600 VA V**
22.83	**23.03**	22.24	1.18	1.28	2.56	0.94	4.53	1.97 ± 0.47	R	**580 VE R**
		22.24	0.83	1.28	2.56	0.94	4.53	1.97 ± 0.47	R	**580 VRME R**
23.03	**23.23**	22.44	1.18	1.28	2.56	0.94	4.53	1.97 ± 0.47	R	**585 VE R**
		22.44	0.83	1.28	2.56	0.94	4.53	1.97 ± 0.47	R	**585 VRME R**
23.23	**23.62**	22.64	1.18	1.28	2.56	0.94	4.53	1.97 ± 0.47	R	**590 VE R**
		22.64	0.83	1.28	2.56	0.94	4.53	1.97 ± 0.47	R	**590 VRME R**
23.62	**24.02**	22.91	1.18	1.28	2.56	0.94	4.53	1.97 ± 0.47	R	**600 VE R**
		22.91	0.83	1.28	2.56	0.94	4.53	1.97 ± 0.47	R	**600 VRME R**

Dimensions Shaft diameter range d_1 over	incl.	Seal inside diameter, free state d	Nominal seal height c	Seal seat width b_1	Nominal seal width b	Clearance D_1 (= d_1 +) max	Counterface D (= d_1 +) min	Seal fitted width B_1	Lip code	Designation
in.		in.							–	–
24.02	**24.41**	23.31	1.18	1.28	2.56	0.94	4.53	1.97 ± 0.47	R	**610 VE R**
		23.31	0.83	1.28	2.56	0.94	4.53	1.97 ± 0.47	R	**610 VRME R**
24.41	**24.80**	23.70	1.18	1.28	2.56	0.94	4.53	1.97 ± 0.47	R	**620 VE R**
		23.70	0.83	1.28	2.56	0.94	4.53	1.97 ± 0.47	R	**620 VRME R**
24.21	**26.57**	23.62	0.26	0.24	0.41	0.20	0.79	0.31 ± 0.06	R	**650 VL R**
		23.62	0.26	0.24	0.41	0.20	0.79	0.31 ± 0.06	V	**650 VL V**
24.80	**26.18**	23.62	0.59	0.56	0.98	0.39	1.77	0.79 ± 0.16	R	**650 VA R**
		23.62	0.59	0.56	0.98	0.39	1.77	0.79 ± 0.16	V	**650 VA V**
24.80	**25.20**	24.09	1.18	1.28	2.56	0.94	4.53	1.97 ± 0.47	R	**630 VE R**
		24.09	0.83	1.28	2.56	0.94	4.53	1.97 ± 0.47	R	**630 VRME R**
25.20	**25.59**	24.45	1.18	1.28	2.56	0.94	4.53	1.97 ± 0.47	R	**640 VE R**
		24.45	0.83	1.28	2.56	0.94	4.53	1.97 ± 0.47	R	**640 VRME R**
25.59	**25.98**	24.84	1.18	1.28	2.56	0.94	4.53	1.97 ± 0.47	R	**650 VE R**
		24.84	0.83	1.28	2.56	0.94	4.53	1.97 ± 0.47	R	**650 VRME R**
25.98	**26.38**	25.20	1.18	1.28	2.56	0.94	4.53	1.97 ± 0.47	R	**660 VE R**
		25.20	0.83	1.28	2.56	0.94	4.53	1.97 ± 0.47	R	**660 VRME R**
26.57	**27.95**	24.80	0.26	0.24	0.41	0.20	0.79	0.31 ± 0.06	R	**700 VL R**
		24.80	0.26	0.24	0.41	0.20	0.79	0.31 ± 0.06	V	**700 VL V**
26.18	**27.76**	24.80	0.59	0.56	0.98	0.39	1.77	0.79 ± 0.16	R	**700 VA R**
		24.80	0.59	0.56	0.98	0.39	1.77	0.79 ± 0.16	V	**700 VA V**
26.38	**26.77**	25.59	1.18	1.28	2.56	0.94	4.53	1.97 ± 0.47	R	**670 VE R**
		25.59	0.83	1.28	2.56	0.94	4.53	1.97 ± 0.47	R	**670 VRME R**
26.77	**27.17**	25.98	1.18	1.28	2.56	0.94	4.53	1.97 ± 0.47	R	**680 VE R**
		25.98	0.83	1.28	2.56	0.94	4.53	1.97 ± 0.47	R	**680 VRME R**
27.17	**27.56**	26.38	1.18	1.28	2.56	0.94	4.53	1.97 ± 0.47	R	**690 VE R**
		26.38	0.83	1.28	2.56	0.94	4.53	1.97 ± 0.47	R	**690 VRME R**
27.56	**27.95**	26.77	1.18	1.28	2.56	0.94	4.53	1.97 ± 0.47	R	**700 VE R**
		26.77	0.83	1.28	2.56	0.94	4.53	1.97 ± 0.47	R	**700 VRME R**
27.95	**29.13**	26.38	0.26	0.24	0.41	0.20	0.79	0.31 ± 0.06	R	**725 VL R**
		26.38	0.26	0.24	0.41	0.20	0.79	0.31 ± 0.06	V	**725 VL V**
27.76	**29.33**	26.38	0.59	0.56	0.98	0.39	1.77	0.79 ± 0.16	R	**725 VA R**
		26.38	0.59	0.56	0.98	0.39	1.77	0.79 ± 0.16	V	**725 VA V**
27.95	**28.35**	27.13	1.18	1.28	2.56	0.94	4.53	1.97 ± 0.47	R	**710 VE R**
		27.13	0.83	1.28	2.56	0.94	4.53	1.97 ± 0.47	R	**710 VRME R**
28.35	**28.74**	27.52	1.18	1.28	2.56	0.94	4.53	1.97 ± 0.47	R	**720 VE R**
		27.52	0.83	1.28	2.56	0.94	4.53	1.97 ± 0.47	R	**720 VRME R**
28.74	**29.13**	27.91	1.18	1.28	2.56	0.94	4.53	1.97 ± 0.47	R	**730 VE R**
		27.91	0.83	1.28	2.56	0.94	4.53	1.97 ± 0.47	R	**730 VRME R**
29.13	**29.53**	28.27	1.18	1.28	2.56	0.94	4.53	1.97 ± 0.47	R	**740 VE R**
		28.27	0.83	1.28	2.56	0.94	4.53	1.97 ± 0.47	R	**740 VRME R**
29.13	**30.51**	27.76	0.26	0.24	0.41	0.20	0.79	0.31 ± 0.06	R	**750 VL R**
		27.76	0.26	0.24	0.41	0.20	0.79	0.31 ± 0.06	V	**750 VL V**
29.33	**30.91**	27.76	0.59	0.56	0.98	0.39	1.77	0.79 ± 0.16	R	**750 VA R**
		27.76	0.59	0.56	0.98	0.39	1.77	0.79 ± 0.16	V	**750 VA V**
29.53	**29.84**	28.66	1.18	1.28	2.56	0.94	4.53	1.97 ± 0.47	R	**750 VE R**
		28.66	0.83	1.28	2.56	0.94	4.53	1.97 ± 0.47	R	**750 VRME R**

V-ring seals – inch dimensions, globally valid outside North American market

d_1 **29.84 – 41.93** in.

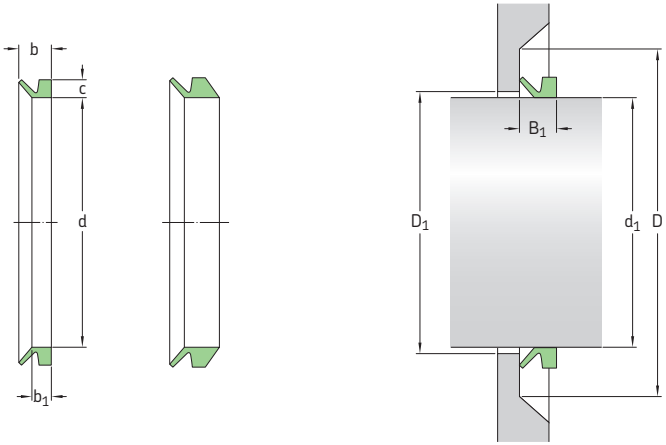

Dimensions Shaft diameter range d_1 over	 incl.	Seal inside diameter, free state d	Nominal seal height c	Seal seat width b_1	Nominal seal width b	Clearance D_1 (= d_1 +) max	Counterface D (= d_1 +) min	Seal fitted width B_1	Lip code	Designation
in.		in.							–	–
29.84	**30.16**	28.94	1.18	1.28	2.56	0.94	4.53	1.97 ± 0.47	R	**760 VE R**
		28.94	0.83	1.28	2.56	0.94	4.53	1.97 ± 0.47	R	**760 VRME R**
30.16	**30.47**	29.25	1.18	1.28	2.56	0.94	4.53	1.97 ± 0.47	R	**770 VE R**
		29.25	0.83	1.28	2.56	0.94	4.53	1.97 ± 0.47	R	**770 VRME R**
30.47	**30.83**	29.57	1.18	1.28	2.56	0.94	4.53	1.97 ± 0.47	R	**780 VE R**
		29.57	0.83	1.28	2.56	0.94	4.53	1.97 ± 0.47	R	**780 VRME R**
30.83	**31.18**	29.88	1.18	1.28	2.56	0.94	4.53	1.97 ± 0.47	R	**790 VE R**
		29.88	0.83	1.28	2.56	0.94	4.53	1.97 ± 0.47	R	**790 VRME R**
30.51	**32.48**	29.33	0.26	0.24	0.41	0.20	0.79	0.31 ± 0.06	R	**800 VL R**
		29.33	0.26	0.24	0.41	0.20	0.79	0.31 ± 0.06	V	**800 VL V**
30.91	**32.68**	29.33	0.59	0.56	0.98	0.39	1.77	0.79 ± 0.16	R	**800 VA R**
		29.33	0.59	0.56	0.98	0.39	1.77	0.79 ± 0.16	V	**800 VA V**
31.18	**31.54**	30.24	1.18	1.28	2.56	0.94	4.53	1.97 ± 0.47	R	**800 VE R**
		30.24	0.83	1.28	2.56	0.94	4.53	1.97 ± 0.47	R	**800 VRME R**
31.54	**31.89**	30.59	1.18	1.28	2.56	0.94	4.53	1.97 ± 0.47	R	**810 VE R**
		30.59	0.83	1.28	2.56	0.94	4.53	1.97 ± 0.47	R	**810 VRME R**
31.89	**32.32**	30.94	1.18	1.28	2.56	0.94	4.53	1.97 ± 0.47	R	**820 VE R**
		30.94	0.83	1.28	2.56	0.94	4.53	1.97 ± 0.47	R	**820 VRME R**
32.32	**32.72**	31.34	1.18	1.28	2.56	0.94	4.53	1.97 ± 0.47	R	**830 VE R**
		31.34	0.83	1.28	2.56	0.94	4.53	1.97 ± 0.47	R	**830 VRME R**
32.48	**34.45**	30.91	0.26	0.24	0.41	0.20	0.79	0.31 ± 0.06	R	**850 VL R**
		30.91	0.26	0.24	0.41	0.20	0.79	0.31 ± 0.06	V	**850 VL V**
32.68	**34.45**	30.91	0.59	0.56	0.98	0.39	1.77	0.79 ± 0.16	R	**850 VA R**
		30.91	0.59	0.56	0.98	0.39	1.77	0.79 ± 0.16	V	**850 VA V**
32.72	**33.11**	31.69	1.18	1.28	2.56	0.94	4.53	1.97 ± 0.47	R	**840 VE R**
		31.69	0.83	1.28	2.56	0.94	4.53	1.97 ± 0.47	R	**840 VRME R**
33.11	**33.50**	32.05	1.18	1.28	2.56	0.94	4.53	1.97 ± 0.47	R	**850 VE R**
		32.05	0.83	1.28	2.56	0.94	4.53	1.97 ± 0.47	R	**850 VRME R**

Dimensions Shaft diameter range d_1 over	incl.	Seal inside diameter, free state d	Nominal seal height c	Seal seat width b_1	Nominal seal width b	Clearance D_1 (= d_1 +) max	Counterface D (= d_1 +) min	Seal fitted width B_1	Lip code	Designation
in.		in.							–	–
33.50	**33.90**	32.44	1.18	1.28	2.56	0.94	4.53	1.97 ± 0.47	R	**860 VE R**
		32.44	0.83	1.28	2.56	0.94	4.53	1.97 ± 0.47	R	**860 VRME R**
33.90	**34.29**	32.80	1.18	1.28	2.56	0.94	4.53	1.97 ± 0.47	R	**870 VE R**
		32.80	0.83	1.28	2.56	0.94	4.53	1.97 ± 0.47	R	**870 VRME R**
34.29	**34.72**	33.19	1.18	1.28	2.56	0.94	4.53	1.97 ± 0.47	R	**880 VE R**
		33.19	0.83	1.28	2.56	0.94	4.53	1.97 ± 0.47	R	**880 VRME R**
34.45	**36.42**	32.48	0.26	0.24	0.41	0.20	0.79	0.31 ± 0.06	R	**900 VL R**
		32.48	0.26	0.24	0.41	0.20	0.79	0.31 ± 0.06	V	**900 VL V**
34.45	**36.22**	32.48	0.59	0.56	0.98	0.39	1.77	0.79 ± 0.16	R	**900 VA R**
		32.48	0.59	0.56	0.98	0.39	1.77	0.79 ± 0.16	V	**900 VA V**
34.72	**35.12**	33.58	1.18	1.28	2.56	0.94	4.53	1.97 ± 0.47	R	**890 VE R**
		33.58	0.83	1.28	2.56	0.94	4.53	1.97 ± 0.47	R	**890 VRME R**
35.12	**35.91**	34.29	1.18	1.28	2.56	0.94	4.53	1.97 ± 0.47	R	**900 VE R**
		34.29	0.83	1.28	2.56	0.94	4.53	1.97 ± 0.47	R	**900 VRME R**
35.91	**36.30**	34.65	1.18	1.28	2.56	0.94	4.53	1.97 ± 0.47	R	**920 VE R**
		34.65	0.83	1.28	2.56	0.94	4.53	1.97 ± 0.47	R	**920 VRME R**
36.42	**38.39**	34.06	0.26	0.24	0.41	0.20	0.79	0.31 ± 0.06	R	**950 VL R**
		34.06	0.26	0.24	0.41	0.20	0.79	0.31 ± 0.06	V	**950 VL V**
36.22	**37.99**	34.06	0.59	0.56	0.98	0.39	1.77	0.79 ± 0.16	R	**950 VA R**
		34.06	0.59	0.56	0.98	0.39	1.77	0.79 ± 0.16	V	**950 VA V**
36.30	**36.73**	35.04	1.18	1.28	2.56	0.94	4.53	1.97 ± 0.47	R	**930 VE R**
		35.04	0.83	1.28	2.56	0.94	4.53	1.97 ± 0.47	R	**930 VRME R**
36.73	**37.17**	35.43	1.18	1.28	2.56	0.94	4.53	1.97 ± 0.47	R	**940 VE R**
		35.43	0.83	1.28	2.56	0.94	4.53	1.97 ± 0.47	R	**940 VRME R**
37.17	**37.60**	35.87	1.18	1.28	2.56	0.94	4.53	1.97 ± 0.47	R	**950 VE R**
		35.87	0.83	1.28	2.56	0.94	4.53	1.97 ± 0.47	R	**950 VRME R**
37.60	**38.03**	36.26	1.18	1.28	2.56	0.94	4.53	1.97 ± 0.47	R	**960 VE R**
		36.26	0.83	1.28	2.56	0.94	4.53	1.97 ± 0.47	R	**960 VRME R**
38.39	**40.35**	35.83	0.26	0.24	0.41	0.20	0.79	0.31 ± 0.06	R	**1000 VL R**
		35.83	0.26	0.24	0.41	0.20	0.79	0.31 ± 0.06	V	**1000 VL V**
37.99	**39.96**	35.83	0.59	0.56	0.98	0.39	1.77	0.79 ± 0.16	R	**1000 VA R**
		35.83	0.59	0.56	0.98	0.39	1.77	0.79 ± 0.16	V	**1000 VA V**
38.03	**38.46**	36.69	1.18	1.28	2.56	0.94	4.53	1.97 ± 0.47	R	**970 VE R**
		36.69	0.83	1.28	2.56	0.94	4.53	1.97 ± 0.47	R	**970 VRME R**
38.46	**38.90**	37.09	1.18	1.28	2.56	0.94	4.53	1.97 ± 0.47	R	**980 VE R**
		37.09	0.83	1.28	2.56	0.94	4.53	1.97 ± 0.47	R	**980 VRME R**
38.90	**39.33**	37.52	1.18	1.28	2.56	0.94	4.53	1.97 ± 0.47	R	**990 VE R**
		37.52	0.83	1.28	2.56	0.94	4.53	1.97 ± 0.47	R	**990 VRME R**
39.33	**39.76**	37.91	1.18	1.28	2.56	0.94	4.53	1.97 ± 0.47	R	**1000 VE R**
		37.91	0.83	1.28	2.56	0.94	4.53	1.97 ± 0.47	R	**1000 VRME R**
39.76	**40.35**	38.31	1.18	1.28	2.56	0.94	4.53	1.97 ± 0.47	R	**1020 VE R**
		38.31	0.83	1.28	2.56	0.94	4.53	1.97 ± 0.47	R	**1020 VRME R**
40.35	**42.32**	37.60	0.26	0.24	0.41	0.20	0.79	0.31 ± 0.06	R	**1050 VL R**
		37.60	0.26	0.24	0.41	0.20	0.79	0.31 ± 0.06	V	**1050 VL V**
39.96	**41.93**	37.60	0.59	0.56	0.98	0.39	1.77	0.79 ± 0.16	R	**1050 VA R**

V-ring seals – inch dimensions, globally valid outside North American market

d_1 **40.35 – 59.65** in.

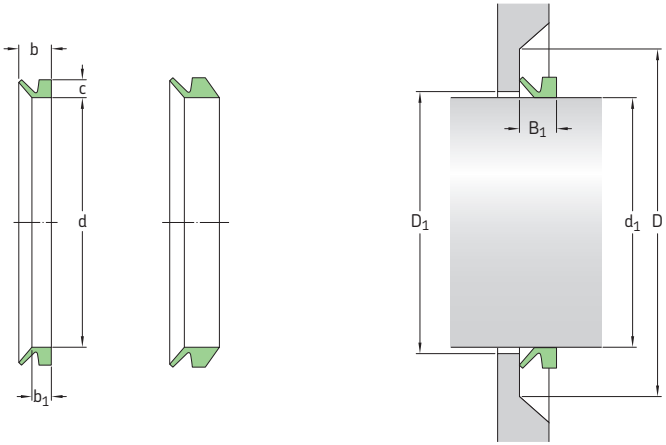

Dimensions Shaft diameter range d_1 over	incl.	Seal inside diameter, free state d	Nominal seal height c	Seal seat width b_1	Nominal seal width b	Clearance D_1 (= d_1 +) max	Counterface D (= d_1 +) min	Seal fitted width B_1	Lip code	Designation
in.		in.							–	–
40.35	**41.14**	38.98	1.18	1.28	2.56	0.94	4.53	1.97 ± 0.47	R	**1040 VE R**
		38.98	0.83	1.28	2.56	0.94	4.53	1.97 ± 0.47	R	**1040 VRME R**
41.14	**41.93**	39.69	1.18	1.28	2.56	0.94	4.53	1.97 ± 0.47	R	**1060 VE R**
		39.69	0.83	1.28	2.56	0.94	4.53	1.97 ± 0.47	R	**1060 VRME R**
42.32	**44.29**	39.37	0.26	0.24	0.41	0.20	0.79	0.31 ± 0.06	R	**1100 VL R**
		39.37	0.26	0.24	0.41	0.20	0.79	0.31 ± 0.06	V	**1100 VL V**
41.93	**43.90**	39.37	0.59	0.56	0.98	0.39	1.77	0.79 ± 0.16	R	**1100 VA R**
		40.43	1.18	1.28	2.56	0.94	4.53	1.97 ± 0.47	R	**1080 VE R**
41.93	**42.72**	40.43	0.83	1.28	2.56	0.94	4.53	1.97 ± 0.47	R	**1080 VRME R**
42.72	**43.50**	41.14	1.18	1.28	2.56	0.94	4.53	1.97 ± 0.47	R	**1100 VE R**
		41.14	0.83	1.28	2.56	0.94	4.53	1.97 ± 0.47	R	**1100 VRME R**
43.50	**44.29**	41.93	1.18	1.28	2.56	0.94	4.53	1.97 ± 0.47	R	**1120 VE R**
		41.93	0.83	1.28	2.56	0.94	4.53	1.97 ± 0.47	R	**1120 VRME R**
44.29	**46.26**	41.14	0.26	0.24	0.41	0.20	0.79	0.31 ± 0.06	R	**1150 VL R**
		41.14	0.26	0.24	0.41	0.20	0.79	0.31 ± 0.06	V	**1150 VL V**
43.90	**45.87**	41.14	0.59	0.56	0.98	0.39	1.77	0.79 ± 0.16	R	**1150 VA R**
44.29	**45.08**	42.68	1.18	1.28	2.56	0.94	4.53	1.97 ± 0.47	R	**1140 VE R**
		42.68	0.83	1.28	2.56	0.94	4.53	1.97 ± 0.47	R	**1140 VRME R**
45.08	**45.87**	43.43	1.18	1.28	2.56	0.94	4.53	1.97 ± 0.47	R	**1160 VE R**
		43.43	0.83	1.28	2.56	0.94	4.53	1.97 ± 0.47	R	**1160 VRME R**
46.26	**48.23**	42.91	0.26	0.24	0.41	0.20	0.79	0.31 ± 0.06	R	**1200 VL R**
		42.91	0.26	0.24	0.41	0.20	0.79	0.31 ± 0.06	V	**1200 VL V**
45.87	**47.83**	42.91	0.59	0.56	0.98	0.39	1.77	0.79 ± 0.16	R	**1200 VA R**
45.87	**46.65**	44.13	1.18	1.28	2.56	0.94	4.53	1.97 ± 0.47	R	**1180 VE R**
		44.13	0.83	1.28	2.56	0.94	4.53	1.97 ± 0.47	R	**1180 VRME R**
46.65	**47.44**	44.84	1.18	1.28	2.56	0.94	4.53	1.97 ± 0.47	R	**1200 VE R**
		44.84	0.83	1.28	2.56	0.94	4.53	1.97 ± 0.47	R	**1200 VRME R**

Dimensions Shaft diameter range d_1 over	incl.	Seal inside diameter, free state d	Nominal seal height c	Seal seat width b_1	Nominal seal width b	Clearance D_1 (= d_1 +) max	Counterface D (= d_1 +) min	Seal fitted width B_1	Lip code	Designation
in.		in.							–	–
47.44	**48.23**	45.55	1.18	1.28	2.56	0.94	4.53	1.97 ± 0.47	R	**1220 VE R**
		45.55	0.83	1.28	2.56	0.94	4.53	1.97 ± 0.47	R	**1220 VRME R**
48.23	**50.20**	44.69	0.26	0.24	0.41	0.20	0.79	0.31 ± 0.06	R	**1250 VL R**
		44.69	0.26	0.24	0.41	0.20	0.79	0.31 ± 0.06	V	**1250 VL V**
47.83	**50.00**	44.69	0.59	0.56	0.98	0.39	1.77	0.79 ± 0.16	R	**1250 VA R**
48.23	**49.02**	46.30	1.18	1.28	2.56	0.94	4.53	1.97 ± 0.47	R	**1240 VE R**
		46.30	0.83	1.28	2.56	0.94	4.53	1.97 ± 0.47	R	**1240 VRME R**
49.02	**50.00**	47.05	1.18	1.28	2.56	0.94	4.53	1.97 ± 0.47	R	**1260 VE R**
		47.05	0.83	1.28	2.56	0.94	4.53	1.97 ± 0.47	R	**1260 VRME R**
50.00	**50.98**	47.95	1.18	1.28	2.56	0.94	4.53	1.97 ± 0.47	R	**1280 VE R**
		47.95	0.83	1.28	2.56	0.94	4.53	1.97 ± 0.47	R	**1280 VRME R**
50.20	**52.17**	46.46	0.26	0.24	0.41	0.20	0.79	0.31 ± 0.06	R	**1300 VL R**
		46.46	0.26	0.24	0.41	0.20	0.79	0.31 ± 0.06	V	**1300 VL V**
50.00	**51.97**	46.46	0.59	0.56	0.98	0.39	1.77	0.79 ± 0.16	R	**1300 VA R**
50.98	**51.77**	48.82	1.18	1.28	2.56	0.94	4.53	1.97 ± 0.47	R	**1300 VE R**
		48.82	0.83	1.28	2.56	0.94	4.53	1.97 ± 0.47	R	**1300 VRME R**
51.77	**52.76**	49.57	1.18	1.28	2.56	0.94	4.53	1.97 ± 0.47	R	**1325 VE R**
		49.57	0.83	1.28	2.56	0.94	4.53	1.97 ± 0.47	R	**1325 VRME R**
52.17	**54.13**	48.23	0.26	0.24	0.41	0.20	0.79	0.31 ± 0.06	R	**1350 VL R**
		48.23	0.26	0.24	0.41	0.20	0.79	0.31 ± 0.06	V	**1350 VL V**
51.97	**53.94**	48.23	0.59	0.56	0.98	0.39	1.77	0.79 ± 0.16	R	**1350 VA R**
52.76	**53.74**	50.43	1.18	1.28	2.56	0.94	4.53	1.97 ± 0.47	R	**1350 VE R**
		50.43	0.83	1.28	2.56	0.94	4.53	1.97 ± 0.47	R	**1350 VRME R**
53.74	**54.72**	51.38	1.18	1.28	2.56	0.94	4.53	1.97 ± 0.47	R	**1375 VE R**
		51.38	0.83	1.28	2.56	0.94	4.53	1.97 ± 0.47	R	**1375 VRME R**
54.13	**56.10**	50.00	0.26	0.24	0.41	0.20	0.79	0.31 ± 0.06	R	**1400 VL R**
		50.00	0.26	0.24	0.41	0.20	0.79	0.31 ± 0.06	V	**1400 VL V**
53.94	**55.91**	50.00	0.59	0.56	0.98	0.39	1.77	0.79 ± 0.16	R	**1400 VA R**
54.72	**55.71**	52.28	1.18	1.28	2.56	0.94	4.53	1.97 ± 0.47	R	**1400 VE R**
		52.28	0.83	1.28	2.56	0.94	4.53	1.97 ± 0.47	R	**1400 VRME R**
55.71	**56.69**	53.15	1.18	1.28	2.56	0.94	4.53	1.97 ± 0.47	R	**1425 VE R**
		53.15	0.83	1.28	2.56	0.94	4.53	1.97 ± 0.47	R	**1425 VRME R**
56.10	**58.07**	51.77	0.26	0.24	0.41	0.20	0.79	0.31 ± 0.06	R	**1450 VL R**
		51.77	0.26	0.24	0.41	0.20	0.79	0.31 ± 0.06	V	**1450 VL V**
55.91	**57.87**	51.77	0.59	0.56	0.98	0.39	1.77	0.79 ± 0.16	R	**1450 VA R**
56.69	**57.68**	54.09	1.18	1.28	2.56	0.94	4.53	1.97 ± 0.47	R	**1450 VE R**
		54.09	0.83	1.28	2.56	0.94	4.53	1.97 ± 0.47	R	**1450 VRME R**
57.68	**58.66**	55.00	1.18	1.28	2.56	0.94	4.53	1.97 ± 0.47	R	**1475 VE R**
		55.00	0.83	1.28	2.56	0.94	4.53	1.97 ± 0.47	R	**1475 VRME R**
58.07	**60.04**	53.54	0.26	0.24	0.41	0.20	0.79	0.31 ± 0.06	R	**1500 VL R**
		53.54	0.26	0.24	0.41	0.20	0.79	0.31 ± 0.06	V	**1500 VL V**
57.87	**59.84**	53.54	0.59	0.56	0.98	0.39	1.77	0.79 ± 0.16	R	**1500 VA R**
58.66	**59.65**	55.87	1.18	1.28	2.56	0.94	4.53	1.97 ± 0.47	R	**1500 VE R**
		55.87	0.83	1.28	2.56	0.94	4.53	1.97 ± 0.47	R	**1500 VRME R**

V-ring seals – inch dimensions, globally valid outside North American market

d_1 **59.65 – 79.53** in.

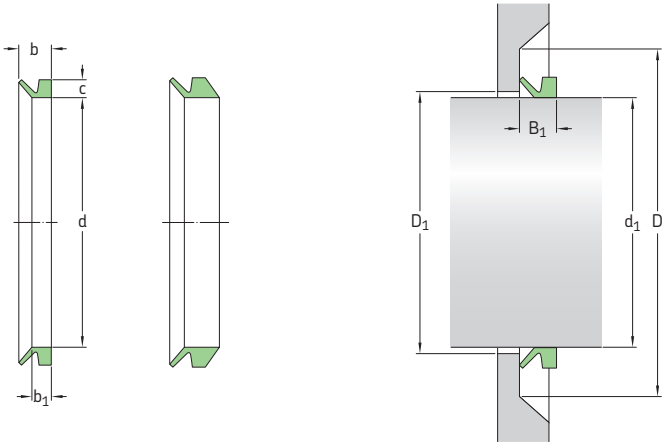

Dimensions Shaft diameter range d_1 over	incl.	Seal inside diameter, free state d	Nominal seal height c	Seal seat width b_1	Nominal seal width b	Clearance D_1 (= d_1 +) max	Counterface D (= d_1 +) min	Seal fitted width B_1	Lip code	Designation
in.		in.							–	–
59.65	**60.63**	56.81	1.18	1.28	2.56	0.94	4.53	1.97 ± 0.47	R	**1525 VE R**
		56.81	0.83	1.28	2.56	0.94	4.53	1.97 ± 0.47	R	**1525 VRME R**
60.04	**62.01**	55.31	0.26	0.24	0.41	0.20	0.79	0.31 ± 0.06	R	**1550 VL R**
		55.31	0.26	0.24	0.41	0.20	0.79	0.31 ± 0.06	V	**1550 VL V**
59.84	**61.81**	55.31	0.59	0.56	0.98	0.39	1.77	0.79 ± 0.16	R	**1550 VA R**
60.63	**61.81**	57.76	1.18	1.28	2.56	0.94	4.53	1.97 ± 0.47	R	**1550 VE R**
		57.76	0.83	1.28	2.56	0.94	4.53	1.97 ± 0.47	R	**1550 VRME R**
61.81	**62.99**	58.86	1.18	1.28	2.56	0.94	4.53	1.97 ± 0.47	R	**1575 VE R**
		58.86	0.83	1.28	2.56	0.94	4.53	1.97 ± 0.47	R	**1575 VRME R**
62.01	**63.98**	57.09	0.26	0.24	0.41	0.20	0.79	0.31 ± 0.06	R	**1600 VL R**
		57.09	0.26	0.24	0.41	0.20	0.79	0.31 ± 0.06	V	**1600 VL V**
61.81	**63.78**	57.09	0.59	0.56	0.98	0.39	1.77	0.79 ± 0.16	R	**1600 VA R**
62.99	**64.57**	60.00	1.18	1.28	2.56	0.94	4.53	1.97 ± 0.47	R	**1600 VE R**
		60.00	0.83	1.28	2.56	0.94	4.53	1.97 ± 0.47	R	**1600 VRME R**
63.98	**65.94**	58.86	0.26	0.24	0.41	0.20	0.79	0.31 ± 0.06	R	**1650 VL R**
		58.86	0.26	0.24	0.41	0.20	0.79	0.31 ± 0.06	V	**1650 VL V**
63.78	**65.75**	58.86	0.59	0.56	0.98	0.39	1.77	0.79 ± 0.16	R	**1650 VA R**
64.57	**66.14**	61.38	1.18	1.28	2.56	0.94	4.53	1.97 ± 0.47	R	**1650 VE R**
		61.38	0.83	1.28	2.56	0.94	4.53	1.97 ± 0.47	R	**1650 VRME R**
65.94	**67.91**	60.63	0.26	0.24	0.41	0.20	0.79	0.31 ± 0.06	R	**1700 VL R**
		60.63	0.26	0.24	0.41	0.20	0.79	0.31 ± 0.06	V	**1700 VL V**
65.75	**67.72**	60.63	0.59	0.56	0.98	0.39	1.77	0.79 ± 0.16	R	**1700 VA R**
66.14	**67.72**	62.83	1.18	1.28	2.56	0.94	4.53	1.97 ± 0.47	R	**1700 VE R**
		62.83	0.83	1.28	2.56	0.94	4.53	1.97 ± 0.47	R	**1700 VRME R**
67.91	**69.88**	62.40	0.26	0.24	0.41	0.20	0.79	0.31 ± 0.06	R	**1750 VL R**
		62.40	0.26	0.24	0.41	0.20	0.79	0.31 ± 0.06	V	**1750 VL V**

Dimensions									Lip code	Designation
Shaft diameter range d_1 over	incl.	Seal inside diameter, free state d	Nominal seal height c	Seal seat width b_1	Nominal seal width b	Clearance D_1 (= d_1 +) max	Counterface D (= d_1 +) min	Seal fitted width B_1		
in.		in.							–	–
67.72	**69.69**	62.40	0.59	0.56	0.98	0.39	1.77	0.79 ± 0.16	R	**1750 VA R**
67.72	**69.49**	64.25	1.18	1.28	2.56	0.94	4.53	1.97 ± 0.47	R	**1750 VE R**
		64.25	0.83	1.28	2.56	0.94	4.53	1.97 ± 0.47	R	**1750 VRME R**
69.49	**71.26**	65.79	1.18	1.28	2.56	0.94	4.53	1.97 ± 0.47	R	**1800 VE R**
		65.79	0.83	1.28	2.56	0.94	4.53	1.97 ± 0.47	R	**1800 VRME R**
69.88	**71.85**	64.17	0.26	0.24	0.41	0.20	0.79	0.31 ± 0.06	R	**1800 VL R**
		64.17	0.26	0.24	0.41	0.20	0.79	0.31 ± 0.06	V	**1800 VL V**
69.69	**71.65**	64.17	0.59	0.56	0.98	0.39	1.77	0.79 ± 0.16	R	**1800 VA R**
71.26	**73.03**	67.48	1.18	1.28	2.56	0.94	4.53	1.97 ± 0.47	R	**1850 VE R**
		67.48	0.83	1.28	2.56	0.94	4.53	1.97 ± 0.47	R	**1850 VRME R**
71.85	**73.82**	65.94	0.26	0.24	0.41	0.20	0.79	0.31 ± 0.06	R	**1850 VL R**
		65.94	0.26	0.24	0.41	0.20	0.79	0.31 ± 0.06	V	**1850 VL V**
71.65	**73.62**	65.94	0.59	0.56	0.98	0.39	1.77	0.79 ± 0.16	R	**1850 VA R**
73.03	**75.00**	69.02	1.18	1.28	2.56	0.94	4.53	1.97 ± 0.47	R	**1900 VE R**
		69.02	0.83	1.28	2.56	0.94	4.53	1.97 ± 0.47	R	**1900 VRME R**
73.82	**75.79**	67.72	0.26	0.24	0.41	0.20	0.79	0.31 ± 0.06	R	**1900 VL R**
		67.72	0.26	0.24	0.41	0.20	0.79	0.31 ± 0.06	V	**1900 VL V**
73.62	**75.59**	67.72	0.59	0.56	0.98	0.39	1.77	0.79 ± 0.16	R	**1900 VA R**
75.00	**76.97**	70.63	1.18	1.28	2.56	0.94	4.53	1.97 ± 0.47	R	**1950 VE R**
		70.63	0.83	1.28	2.56	0.94	4.53	1.97 ± 0.47	R	**1950 VRME R**
75.79	**77.76**	69.49	0.26	0.24	0.41	0.20	0.79	0.31 ± 0.06	R	**1950 VL R**
75.79	**77.76**	69.49	0.26	0.24	0.41	0.20	0.79	0.31 ± 0.06	V	**1950 VL V**
		69.49	0.59	0.56	0.98	0.39	1.77	0.79 ± 0.16	R	**1950 VA R**
76.97	**79.13**	72.60	1.18	1.28	2.56	0.94	4.53	1.97 ± 0.47	R	**2000 VE R**
		72.60	0.83	1.28	2.56	0.94	4.53	1.97 ± 0.47	R	**2000 VRME R**
77.76	**79.72**	71.26	0.26	0.24	0.41	0.20	0.79	0.31 ± 0.06	R	**2000 VL R**
		71.26	0.26	0.24	0.41	0.20	0.79	0.31 ± 0.06	V	**2000 VL V**
77.56	**79.53**	71.26	0.59	0.56	0.98	0.39	1.77	0.79 ± 0.16	R	**2000 VA R**

V-ring seals – metric dimensions, for North American market

d_1 **2,7 – 53** mm

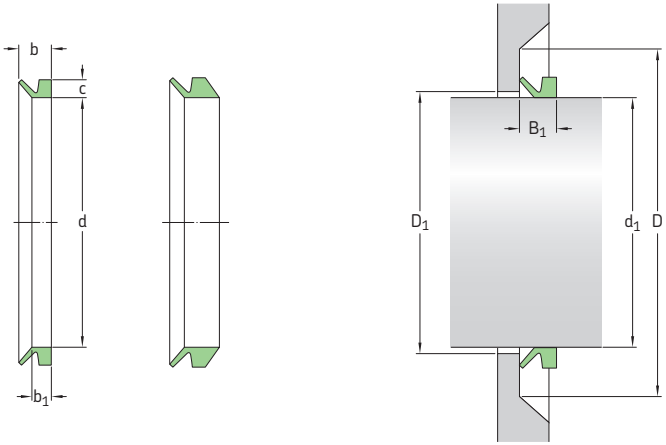

Dimensions									Design	Lip code	Designation
Shaft diameter range d_1		Seal inside diameter, free state d	Seal seat width b_1	Nominal seal width b	Nominal seal height c	Clearance D_1 max	Counterface D min	Seal fitted width B_1			
over	incl.										
mm									–	–	–
2,7	**3,5**	2,5	2,1	3	1,5	d_1+1	d_1+4	2,5 ± 0,3	VR1	R	**400030**
		2,5	2,1	3	1,5	d_1+1	d_1+4	2,5 ± 0,3	VR1	V	**400034**
3,5	**4,5**	3,2	2,4	3,7	2	d_1+1	d_1+6	3 ± 0,4	VR1	R	**400040**
		3,2	2,4	3,7	2	d_1+1	d_1+6	3 ± 0,4	VR1	V	**400044**
4,5	**5,5**	4	2,4	3,7	2	d_1+1	d_1+6	3 ± 0,4	VR1	R	**400050**
		4	2,4	3,7	2	d_1+1	d_1+6	3 ± 0,4	VR1	V	**400054**
		4	3,9	5,2	2	d_1+1	d_1+6	4,5 ± 0,4	VR2	R	**400051**
		4	3,9	5,2	2	d_1+1	d_1+6	4,5 ± 0,4	VR2	V	**400055**
5,5	**6,5**	5	2,4	3,7	2	d_1+1	d_1+6	3 ± 0,4	VR1	R	**400060**
		5	2,4	3,7	2	d_1+1	d_1+6	3 ± 0,4	VR1	V	**400064**
		5	3,9	5,2	2	d_1+1	d_1+6	4,5 ± 0,4	VR2	R	**400061**
		5	3,9	5,2	2	d_1+1	d_1+6	4,5 ± 0,4	VR2	V	**400065**
6,5	**8**	6	2,4	3,7	2	d_1+1	d_1+6	3 ± 0,4	VR1	R	**400070**
		6	2,4	3,7	2	d_1+1	d_1+6	3 ± 0,4	VR1	V	**400074**
		6	3,9	5,2	2	d_1+1	d_1+6	4,5 ± 0,4	VR2	R	**400071**
		6	3,9	5,2	2	d_1+1	d_1+6	4,5 ± 0,4	VR2	V	**400075**
8	**9,5**	7	2,4	3,7	2	d_1+1	d_1+6	3 ± 0,4	VR1	R	**400080**
		7	2,4	3,7	2	d_1+1	d_1+6	3 ± 0,4	VR1	V	**400084**
		7	3,9	5,2	2	d_1+1	d_1+6	4,5 ± 0,4	VR2	R	**400081**
		7	3,9	5,2	2	d_1+1	d_1+6	4,5 ± 0,4	VR2	V	**400085**
9,5	**11,5**	9	3,4	5,5	3	d_1+1	d_1+9	4,5 ± 0,6	VR1	R	**400100**
		9	3,4	5,5	3	d_1+1	d_1+9	4,5 ± 0,6	VR1	V	**400104**
		9	5,6	7,7	3	d_1+1	d_1+9	6,7 ± 0,6	VR2	R	**400101**
		9	5,6	7,7	3	d_1+1	d_1+9	6,7 ± 0,6	VR2	V	**400105**
11,5	**12,5**	10,5	3,4	5,5	3	d_1+1	d_1+9	4,5 ± 0,6	VR1	R	**400120**
		10,5	3,4	5,5	3	d_1+1	d_1+9	4,5 ± 0,6	VR1	V	**400124**
		10,5	5,6	7,7	3	d_1+1	d_1+9	6,7 ± 0,6	VR2	R	**400121**
		10,5	5,6	7,7	3	d_1+1	d_1+9	6,7 ± 0,6	VR2	V	**400125**
12,5	**13,5**	11,7	3,4	5,5	3	d_1+1	d_1+9	4,5 ± 0,6	VR1	R	**400130**
		11,7	3,4	5,5	3	d_1+1	d_1+9	4,5 ± 0,6	VR1	V	**400134**
13,5	**15,5**	12,5	3,4	5,5	3	d_1+1	d_1+9	4,5 ± 0,6	VR1	R	**400140**
		12,5	3,4	5,5	3	d_1+1	d_1+9	4,5 ± 0,6	VR1	V	**400144**

Dimensions									Design	Lip code	Designation
Shaft diameter range		Seal inside diameter, free state	Seal seat width	Nominal seal width	Nominal seal height	Clearance	Counterface	Seal fitted width			
d_1 over	incl.	d	b_1	b	c	D_1 max	D min	B_1			
mm									–	–	–
13,5	**15,5**	12,5	5,6	7,7	3	d_1 + 1	d_1 + 9	6,7 ± 0,6	VR2	R	**400141**
cont.		12,5	5,6	7,7	3	d_1 + 1	d_1 + 9	6,7 ± 0,6	VR2	V	**400145**
15,5	**17**	14	3,4	5,5	3	d_1 + 1	d_1 + 9	4,5 ± 0,6	VR1	R	**400160**
		14	3,4	5,5	3	d_1 + 1	d_1 + 9	4,5 ± 0,6	VR1	V	**400164**
15,5	**17,5**	14	5,6	7,7	3	d_1 + 1	d_1 + 9	6,7 ± 0,6	VR2	R	**400161**
		14	5,6	7,7	3	d_1 + 1	d_1 + 9	6,7 ± 0,6	VR2	V	**400165**
17,5	**19**	16	3,4	5,5	3	d_1 + 1	d_1 + 9	4,5 ± 0,6	VR1	R	**400180**
		16	3,4	5,5	3	d_1 + 1	d_1 + 9	4,5 ± 0,6	VR1	V	**400184**
		16	5,6	7,7	3	d_1 + 1	d_1 + 9	6,7 ± 0,6	VR2	R	**400181**
		16	5,6	7,7	3	d_1 + 1	d_1 + 9	6,7 ± 0,6	VR2	V	**400185**
19	**21**	18	4,7	7,5	4	d_1 + 2	d_1 + 12	6 ± 0,8	VR1	R	**400200**
		18	4,7	7,5	4	d_1 + 2	d_1 + 12	6 ± 0,8	VR1	V	**400204**
		18	7,9	10,5	4	d_1 + 2	d_1 + 12	9 ± 0,8	VR2	R	**400201**
		18	7,9	10,5	4	d_1 + 2	d_1 + 12	9 ± 0,8	VR2	V	**400205**
21	**24**	20	4,7	7,5	4	d_1 + 2	d_1 + 12	6 ± 0,8	VR1	R	**400220**
		20	4,7	7,5	4	d_1 + 2	d_1 + 12	6 ± 0,8	VR1	V	**400224**
		20	7,9	10,5	4	d_1 + 2	d_1 + 12	9 ± 0,8	VR2	R	**400221**
		20	7,9	10,5	4	d_1 + 2	d_1 + 12	9 ± 0,8	VR2	V	**400225**
24	**27**	22	4,7	7,5	4	d_1 + 2	d_1 + 12	6 ± 0,8	VR1	R	**400250**
		22	4,7	7,5	4	d_1 + 2	d_1 + 12	6 ± 0,8	VR1	V	**400254**
		22	7,9	10,5	4	d_1 + 2	d_1 + 12	9 ± 0,8	VR2	R	**400251**
		22	7,9	10,5	4	d_1 + 2	d_1 + 12	9 ± 0,8	VR2	V	**400255**
27	**29**	25	4,7	7,5	4	d_1 + 2	12	6 ± 0,8	VR1	R	**400280**
		25	4,7	7,5	4	d_1 + 2	d_1 + 12	6 ± 0,8	VR1	V	**400284**
		25	7,9	10,5	4	d_1 + 2	d_1 + 12	9 ± 0,8	VR2	R	**400281**
		25	7,9	10,5	4	d_1 + 2	d_1 + 12	9 ± 0,8	VR2	V	**400285**
29	**31**	27	4,7	7,5	4	d_1 + 2	d_1 + 12	6 ± 0,8	VR1	R	**400300**
		27	4,7	7,5	4	d_1 + 2	d_1 + 12	6 ± 0,8	VR1	V	**400304**
		27	7,9	10,5	4	d_1 + 2	d_1 + 12	9 ± 0,8	VR2	R	**400301**
		27	7,9	10,5	4	d_1 + 2	d_1 + 12	9 ± 0,8	VR2	V	**400305**
31	**33**	29	4,7	7,5	4	d_1 + 2	d_1 + 12	6 ± 0,8	VR1	R	**400320**
		29	4,7	7,5	4	d_1 + 2	d_1 + 12	6 ± 0,8	VR1	V	**400324**
		29	7,9	10,5	4	d_1 + 2	d_1 + 12	9 ± 0,8	VR2	R	**400321**
		29	7,9	10,5	4	d_1 + 2	d_1 + 12	9 ± 0,8	VR2	V	**400325**
33	**36**	31	4,7	7,5	4	d_1 + 2	d_1 + 12	6 ± 0,8	VR1	R	**400350**
		31	4,7	7,5	4	d_1 + 2	d_1 + 12	6 ± 0,8	VR1	V	**400354**
		31	7,9	10,5	4	d_1 + 2	d_1 + 12	9 ± 0,8	VR2	R	**400351**
		31	7,9	10,5	4	d_1 + 2	d_1 + 12	9 ± 0,8	VR2	V	**400355**
36	**38**	34	4,7	7,5	4	d_1 + 2	d_1 + 12	6 ± 0,8	VR1	R	**400380**
		34	4,7	7,5	4	d_1 + 2	d_1 + 12	6 ± 0,8	VR1	V	**400384**
		34	7,9	10,5	4	d_1 + 2	d_1 + 12	9 ± 0,8	VR2	R	**400381**
		34	7,9	10,5	4	d_1 + 2	d_1 + 12	9 ± 0,8	VR2	V	**400385**
38	**43**	36	5,5	9	5	d_1 + 2	d_1 + 15	7 ± 1	VR1	R	**400400**
		36	5,5	9	5	d_1 + 2	d_1 + 15	7 ± 1	VR1	V	**400404**
		36	9,5	13	5	d_1 + 2	d_1 + 15	11 ± 1	VR2	R	**400401**
		36	9,5	13	5	d_1 + 2	d_1 + 15	11 ± 1	VR2	V	**400405**
43	**48**	40	5,5	9	5	d_1 + 2	d_1 + 15	7 ± 1	VR1	R	**400450**
		40	5,5	9	5	d_1 + 2	d_1 + 15	7 ± 1	VR1	V	**400454**
		40	9,5	13	5	d_1 + 2	d_1 + 15	11 ± 1	VR2	R	**400451**
		40	9,5	13	5	d_1 + 2	d_1 + 15	11 ± 1	VR2	V	**400455**
48	**53**	45	5,5	9	5	d_1 + 2	d_1 + 15	7 ± 1	VR1	R	**400500**
		45	5,5	9	5	d_1 + 2	d_1 + 15	7 ± 1	VR1	V	**400504**
		45	9,5	13	5	d_1 + 2	d_1 + 15	11 ± 1	VR2	R	**400501**
		45	9,5	13	5	d_1 + 2	d_1 + 15	11 ± 1	VR2	V	**400505**

V-ring seals – metric dimensions, for North American market

d_1 **53 – 195** mm

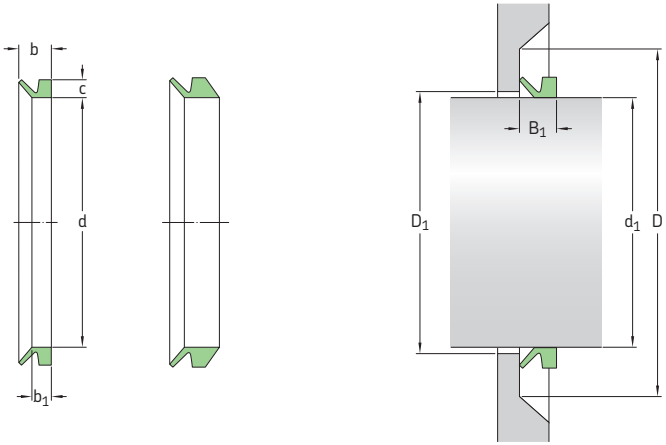

Dimensions									Design	Lip code	Designation
Shaft diameter range d_1		Seal inside diameter, free state d	Seal seat width b_1	Nominal seal width b	Nominal seal height c	Clearance D_1 max	Counterface D min	Seal fitted width B_1			
over	incl.										
mm									–	–	–
53	**58**	49	5,5	9	5	d_1+2	d_1+15	7 ± 1	VR1	R	**400550**
		49	5,5	9	5	d_1+2	d_1+15	7 ± 1	VR1	V	**400554**
		49	9,5	13	5	d_1+2	d_1+15	11 ± 1	VR2	R	**400551**
		49	9,5	13	5	d_1+2	d_1+15	11 ± 1	VR2	V	**400555**
58	**63**	54	5,5	9	5	d_1+2	d_1+15	7 ± 1	VR1	R	**400600**
		54	5,5	9	5	d_1+2	d_1+15	7 ± 1	VR1	V	**400604**
		54	9,5	13	5	d_1+2	d_1+15	11 ± 1	VR2	R	**400601**
		54	9,5	13	5	d_1+2	d_1+15	11 ± 1	VR2	V	**400605**
63	**68**	58	5,5	9	5	d_1+2	d_1+15	7 ± 1	VR1	R	**400650**
		58	5,5	9	5	d_1+2	d_1+15	7 ± 1	VR1	V	**400654**
		58	9,5	13	5	d_1+2	d_1+15	11 ± 1	VR2	R	**400651**
		58	9,5	13	5	d_1+2	d_1+15	11 ± 1	VR2	V	**400655**
68	**73**	63	6,8	11	6	d_1+3	d_1+18	9 ± 1,2	VR1	R	**400700**
		63	6,8	11	6	d_1+3	d_1+18	9 ± 1,2	VR1	V	**400704**
		63	11,3	15,5	6	d_1+3	d_1+18	13,5 ± 1,2	VR2	R	**400701**
		63	11,3	15,5	6	d_1+3	d_1+18	13,5 ± 1,2	VR2	V	**400705**
73	**78**	67	6,8	11	6	d_1+3	d_1+18	9 ± 1,2	VR1	R	**400750**
		67	6,8	11	6	d_1+3	d_1+18	13,5 ± 1,2	VR2	R	**400751**
		67	11,3	15,5	6	d_1+3	d_1+18	13,5 ± 1,2	VR2	V	**400755**
78	**83**	72	6,8	11	6	d_1+3	d_1+18	9 ± 1,2	VR1	R	**400800**
		72	6,8	11	6	d_1+3	d_1+18	9 ± 1,2	VR1	V	**400804**
		72	11,3	15,5	6	d_1+3	d_1+18	13,5 ± 1,2	VR2	R	**400801**
		72	11,3	15,5	6	d_1+3	d_1+18	13,5 ± 1,2	VR2	V	**400805**
83	**88**	76	6,8	11	6	d_1+3	d_1+18	9 ± 1,2	VR1	R	**400850**
		76	6,8	11	6	d_1+3	d_1+18	9 ± 1,2	VR1	V	**400854**
		76	11,3	15,5	6	d_1+3	d_1+18	13,5 ± 1,2	VR2	R	**400851**
		76	11,3	15,5	6	d_1+3	d_1+18	13,5 ± 1,2	VR2	V	**400855**
88	**93**	81	6,8	11	6	d_1+3	d_1+18	9 ± 1,2	VR1	R	**400900**
		81	6,8	11	6	d_1+3	d_1+18	9 ± 1,2	VR1	V	**400904**
		81	11,3	15,5	6	d_1+3	d_1+18	13,5 ± 1,2	VR2	R	**400901**
		81	11,3	15,5	6	d_1+3	d_1+18	13,5 ± 1,2	VR2	V	**400905**
93	**98**	85	6,8	11	6	d_1+3	d_1+18	9 ± 1,2	VR1	R	**400950**
		85	6,8	11	6	d_1+3	d_1+18	9 ± 1,2	VR1	V	**400954**
		85	11,3	15,5	6	d_1+3	d_1+18	13,5 ± 1,2	VR2	R	400951
		85	11,3	15,5	6	d_1+3	d_1+18	13,5 ± 1,2	VR2	V	400955

Dimensions									Design	Lip code	Designation
Shaft diameter range		Seal inside diameter, free state	Seal seat width	Nominal seal width	Nominal seal height	Clearance	Counterface	Seal fitted width			
d_1		d	b_1	b	c	D_1	D	B_1			
over	incl.					max	min				
mm									–	–	–
98	**105**	90	6,8	11	6	d_1+3	d_1+18	9 ± 1,2	VR1	R	**401000**
		90	6,8	11	6	d_1+3	d_1+18	9 ± 1,2	VR1	V	**401004**
		90	11,3	15,5	6	d_1+3	d_1+18	13,5 ± 1,2	VR2	R	**401001**
		90	11,3	15,5	6	d_1+3	d_1+18	13,5 ± 1,2	VR2	V	**401005**
105	**115**	99	6	10,5	6,5	d_1+5	d_1+20	8 ± 1,5	VR3	R	**401102**
		99	6	10,5	6,5	d_1+5	d_1+20	8 ± 1,5	VR3	V	**401106**
		99	7,9	12,8	7	d_1+4	d_1+21	10,5 ± 1,5	VR1	R	**401100**
		99	7,9	12,8	7	d_1+4	d_1+21	10,5 ± 1,5	VR1	V	**401104**
		99	13,1	18	7	d_1+4	d_1+21	15,5 ± 1,5	VR2	R	**401101**
		99	13,1	18	7	d_1+4	d_1+21	15,5 ± 1,5	VR2	V	**401105**
115	**125**	108	6	10,5	6,5	d_1+5	d_1+20	8 ± 1,5	VR3	R	**401202**
		108	6	10,5	6,5	d_1+5	d_1+20	8 ± 1,5	VR3	V	**401206**
		108	7,9	12,8	7	d_1+4	d_1+21	10,5 ± 1,5	VR1	R	**401200**
		108	7,9	12,8	7	d_1+4	d_1+21	10,5 ± 1,5	VR1	V	**401204**
		108	13,1	18	7	d_1+4	d_1+21	15,5 ± 1,5	VR2	R	**401201**
		108	13,1	18	7	d_1+4	d_1+21	15,5 ± 1,5	VR2	V	**401205**
125	**135**	117	6	10,5	6,5	d_1+5	d_1+20	8 ± 1,5	VR3	R	**401302**
		117	6	10,5	6,5	d_1+5	d_1+20	8 ± 1,5	VR3	V	**401306**
		117	7,9	12,8	7	d_1+4	d_1+21	10,5 ± 1,5	VR1	R	**401300**
		117	7,9	12,8	7	d_1+4	d_1+21	10,5 ± 1,5	VR1	V	**401304**
		117	13,1	18	7	d_1+4	d_1+21	15,5 ± 1,5	VR2	R	**401301**
		117	13,1	18	7	d_1+4	d_1+21	15,5 ± 1,5	VR2	V	**401305**
135	**145**	126	6	10,5	6,5	d_1+5	d_1+20	8 ± 1,5	VR3	R	**401402**
		126	6	10,5	6,5	d_1+5	d_1+20	8 ± 1,5	VR3	V	**401406**
		126	7,9	12,8	7	d_1+4	d_1+21	10,5 ± 1,5	VR1	R	**401400**
		126	7,9	12,8	7	d_1+4	d_1+21	10,5 ± 1,5	VR1	V	**401404**
		126	13,1	18	7	d_1+4	d_1+21	15,5 ± 1,5	VR2	R	**401401**
		126	13,1	18	7	d_1+4	d_1+21	15,5 ± 1,5	VR2	V	**401405**
145	**155**	135	6	10,5	6,5	d_1+5	d_1+20	8 ± 1,5	VR3	R	**401502**
		135	6	10,5	6,5	d_1+5	d_1+20	8 ± 1,5	VR3	V	**401506**
		135	7,9	12,8	7	d_1+4	d_1+21	10,5 ± 1,5	VR1	R	**401500**
		135	7,9	12,8	7	d_1+4	d_1+21	10,5 ± 1,5	VR1	V	**401504**
		135	13,1	18	7	d_1+4	d_1+21	15,5 ± 1,5	VR2	R	**401501**
		135	13,1	18	7	d_1+4	d_1+21	15,5 ± 1,5	VR2	V	**401505**
		144	6	10,5	6,5	d_1+5	d_1+20	8 ± 1,5	VR3	R	**401602**
155	**165**	144	6	10,5	6,5	d_1+5	d_1+20	8 ± 1,5	VR3	V	**401606**
		144	9	14,5	8	d_1+4	d_1+24	12 ± 1,8	VR1	R	**401600**
		144	9	14,5	8	d_1+4	d_1+24	12 ± 1,8	VR1	V	**401604**
		144	15	20,5	8	d_1+4	d_1+24	18 ± 1,8	VR2	R	**401601**
		144	15	20,5	8	d_1+4	d_1+24	18 ± 1,8	VR2	V	**401605**
165	**175**	153	6	10,5	6,5	d_1+5	d_1+20	8 ± 1,5	VR3	R	**401702**
		153	6	10,5	6,5	d_1+5	d_1+20	8 ± 1,5	VR3	V	**401706**
		153	9	14,5	8	d_1+4	d_1+24	12 ± 1,8	VR1	R	**401700**
		153	9	14,5	8	d_1+4	d_1+24	12 ± 1,8	VR1	V	**401704**
		153	15	20,5	8	d_1+4	d_1+24	18 ± 1,8	VR2	R	**401701**
		153	15	20,5	8	d_1+4	d_1+24	18 ± 1,8	VR2	V	**401705**
175	**185**	162	6	10,5	6,5	d_1+5	d_1+20	8 ± 1,5	VR3	R	**401802**
		162	6	10,5	6,5	d_1+5	d_1+20	8 ± 1,5	VR3	V	**401806**
		162	9	14,5	8	d_1+4	d_1+24	12 ± 1,8	VR1	R	**401800**
		162	9	14,5	8	d_1+4	d_1+24	12 ± 1,8	VR1	V	**401804**
		162	15	20,5	8	d_1+4	d_1+24	18 ± 1,8	VR2	R	**401801**
		162	15	20,5	8	d_1+4	d_1+24	18 ± 1,8	VR2	V	**401805**
185	**195**	171	6	10,5	6,5	d_1+5	d_1+20	8 ± 1,5	VR3	R	**401902**
		171	6	10,5	6,5	d_1+5	d_1+20	8 ± 1,5	VR3	V	**401906**
		171	9	14,5	8	d_1+4	d_1+24	12 ± 1,8	VR1	R	**401900**
		171	9	14,5	8	d_1+4	d_1+24	12 ± 1,8	VR1	V	**401904**
		171	15	20,5	8	d_1+4	d_1+24	18 ± 1,8	VR2	R	**401901**
		171	15	20,5	8	d_1+4	d_1+24	18 ± 1,8	VR2	V	**401905**

V-ring seals – metric dimensions, for North American market
d_1 **190 – 395** mm

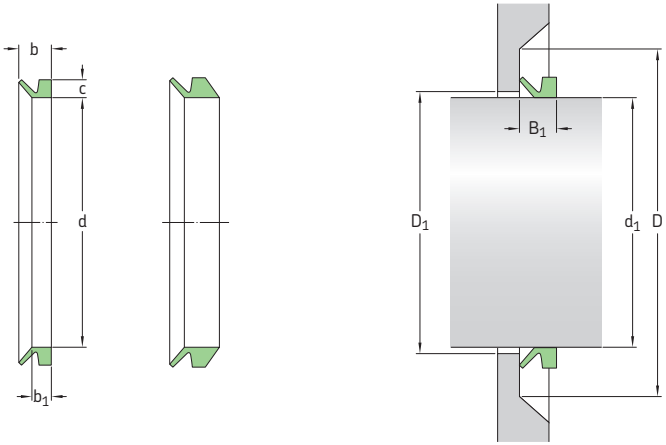

Dimensions									Design	Lip code	Designation
Shaft diameter range d_1		Seal inside diameter, free state d	Seal seat width b_1	Nominal seal width b	Nominal seal height c	Clearance D_1 max	Counterface D min	Seal fitted width B_1			
over	incl.										
mm									–	–	–
195	**210**	182	6	10,5	6,5	d_1 + 5	d_1 + 20	8 ± 1,5	VR3	R	**402002**
		182	6	10,5	6,5	d_1 + 5	d_1 + 20	8 ± 1,5	VR3	V	**402006**
		180	9	14,5	8	d_1 + 4	d_1 + 24	12 ± 1,8	VR1	R	**401990**
		180	9	14,5	8	d_1 + 4	d_1 + 24	12 ± 1,8	VR1	V	**401994**
		180	15	20,5	8	d_1 + 4	d_1 + 24	18 ± 1,8	VR2	R	**401991**
		180	15	20,5	8	d_1 + 4	d_1 + 24	18 ± 1,8	VR2	V	**401995**
190	**210**	180	14,3	25	15	d_1 + 10	d_1 + 45	20 ± 4	VR1	R	**402000**
		180	14,3	25	15	d_1 + 10	d_1 + 45	20 ± 4	VR1	V	**402004**
210	**233**	198	6	10,5	6,5	d_1 + 5	d_1 + 20	8 ± 1,5	VR3	R	**402202**
		198	6	10,5	6,5	d_1 + 5	d_1 + 20	8 ± 1,5	VR3	V	**402206**
		198	14,3	25	15	d_1 + 10	d_1 + 45	20 ± 4	VR1	R	**402200**
		198	14,3	25	15	d_1 + 10	d_1 + 45	20 ± 4	VR1	V	**402204**
233	**260**	225	6	10,5	6,5	d_1 + 5	d_1 + 20	8 ± 1,5	VR3	R	**402502**
		225	6	10,5	6,5	d_1 + 5	d_1 + 20	8 ± 1,5	VR3	V	**402506**
235	**265**	225	14,3	25	15	d_1 + 10	d_1 + 45	20 ± 4	VR1	R	**402500**
		225	14,3	25	15	d_1 + 10	d_1 + 45	20 ± 4	VR1	V	**402504**
260	**285**	247	6	10,5	6,5	d_1 + 5	d_1 + 20	8 ± 1,5	VR3	R	**402752**
		247	6	10,5	6,5	d_1 + 5	d_1 + 20	8 ± 1,5	VR3	V	**402756**
265	**290**	247	14,3	25	15	d_1 + 10	d_1 + 45	20 ± 4	VR1	R	**402750**
		247	14,3	25	15	d_1 + 10	d_1 + 45	20 ± 4	VR1	V	**402754**
285	**310**	270	6	10,5	6,5	d_1 + 5	d_1 + 20	8 ± 1,5	VR3	R	**403002**
		270	6	10,5	6,5	d_1 + 5	d_1 + 20	8 ± 1,5	VR3	V	**403006**
290	**310**	270	14,3	25	15	d_1 + 10	d_1 + 45	20 ± 4	VR1	R	**403000**
		270	14,3	25	15	d_1 + 10	d_1 + 45	20 ± 4	VR1	V	**403004**
300	**305**	294	32,5	65	30	d_1 + 24	d_1 + 115	50 ± 12	VR4	R	**403003**
		294	32,5	65	21	d_1 + 24	d_1 + 115	50 ± 12	VR6	R	**470301**
305	**310**	299	32,5	65	30	d_1 + 24	d_1 + 115	50 ± 12	VR4	R	**403053**
		299	32,5	65	21	d_1 + 24	d_1 + 115	50 ± 12	VR6	R	**470306**
310	**335**	292	6	10,5	6,5	d_1 + 5	d_1 + 20	8 ± 1,5	VR3	R	**403252**
		292	6	10,5	6,5	d_1 + 5	d_1 + 20	8 ± 1,5	VR3	V	**403256**

Dimensions									Design	Lip code	Designation
Shaft diameter range		Seal inside diameter, free state	Seal seat width	Nominal seal width	Nominal seal height	Clearance	Counterface	Seal fitted width			
d_1 over	incl.	d	b_1	b	c	D_1 max	D min	B_1			
mm									–	–	–
310	**335**	292	14,3	25	15	d_1 + 10	d_1 + 45	20 ± 4	VR1	R	**403250**
cont.		292	14,3	25	15	d_1 + 10	d_1 + 45	20 ± 4	VR1	V	**403254**
310	**315**	304	32,5	65	30	d_1 + 24	d_1 + 115	50 ± 12	VR4	R	**403103**
		304	32,5	65	21	d_1 + 24	d_1 + 115	50 ± 12	VR6	R	**470311**
315	**320**	309	32,5	65	30	d_1 + 24	d_1 + 115	50 ± 12	VR4	R	**403153**
		309	32,5	65	21	d_1 + 24	d_1 + 115	50 ± 12	VR6	R	**470316**
320	**325**	314	32,5	65	30	d_1 + 24	d_1 + 115	50 ± 12	VR4	R	**403203**
		314	32,5	65	21	d_1 + 24	d_1 + 115	50 ± 12	VR6	R	**470321**
325	**330**	319	32,5	65	30	d_1 + 24	d_1 + 115	50 ± 12	VR4	R	**403253**
		319	32,5	65	21	d_1 + 24	d_1 + 115	50 ± 12	VR6	R	**470326**
330	**335**	323	32,5	65	30	d_1 + 24	d_1 + 115	50 ± 12	VR4	R	**403303**
		323	32,5	65	21	d_1 + 24	d_1 + 115	50 ± 12	VR6	R	**470331**
335	**365**	315	6	10,5	6,5	d_1 + 5	d_1 + 20	8 ± 1,5	VR3	R	**403502**
		315	6	10,5	6,5	d_1 + 5	d_1 + 20	8 ± 1,5	VR3	V	**403506**
		315	14,3	25	15	d_1 + 10	d_1 + 45	20 ± 4	VR1	R	**403500**
		315	14,3	25	15	d_1 + 10	d_1 + 45	20 ± 4	VR1	V	**403504**
335	**340**	328	32,5	65	30	d_1 + 24	d_1 + 115	50 ± 12	VR4	R	**403353**
		328	32,5	65	21	d_1 + 24	d_1 + 115	50 ± 12	VR6	R	**470336**
340	**345**	333	32,5	65	30	d_1 + 24	d_1 + 115	50 ± 12	VR4	R	**403403**
		328	32,5	65	21	d_1 + 24	d_1 + 115	50 ± 12	VR6	R	**470341**
345	**350**	338	32,5	65	30	d_1 + 24	d_1 + 115	50 ± 12	VR4	R	**403453**
		338	32,5	65	21	d_1 + 24	d_1 + 115	50 ± 12	VR6	R	**470346**
350	**355**	343	32,5	65	30	d_1 + 24	d_1 + 115	50 ± 12	VR4	R	**403503**
		343	32,5	65	21	d_1 + 24	d_1 + 115	50 ± 12	VR6	R	**470351**
355	**360**	347	32,5	65	30	d_1 + 24	d_1 + 115	50 ± 12	VR4	R	**403553**
		347	32,5	65	21	d_1 + 24	d_1 + 115	50 ± 12	VR6	R	**470356**
360	**365**	352	32,5	65	30	d_1 + 24	d_1 + 115	50 ± 12	VR4	R	**403603**
		357	32,5	65	21	d_1 + 24	d_1 + 115	50 ± 12	VR6	R	**470361**
365	**385**	337	6	10,5	6,5	d_1 + 5	d_1 + 20	8 ± 1,5	VR3	R	**403752**
		337	6	10,5	6,5	d_1 + 5	d_1 + 20	8 ± 1,5	VR3	V	**403756**
365	**390**	337	14,3	25	15	d_1 + 10	d_1 + 45	20 ± 4	VR1	R	**403750**
		337	14,3	25	15	d_1 + 10	d_1 + 45	20 ± 4	VR1	V	**403754**
		357	32,5	65	30	d_1 + 24	d_1 + 115	50 ± 12	VR4	R	**403653**
370	**375**	362	32,5	65	30	d_1 + 24	d_1 + 115	50 ± 12	VR4	R	**403703**
		362	32,5	65	21	d_1 + 24	d_1 + 115	50 ± 12	VR6	R	**470371**
375	**380**	367	32,5	65	30	d_1 + 24	d_1 + 115	50 ± 12	VR4	R	**403753**
		367	32,5	65	21	d_1 + 24	d_1 + 115	50 ± 12	VR6	R	**470376**
380	**385**	371	32,5	65	30	d_1 + 24	d_1 + 115	50 ± 12	VR4	R	**403803**
		371	32,5	65	21	d_1 + 24	d_1 + 115	50 ± 12	VR6	R	**470381**
385	**410**	360	6	10,5	6,5	d_1 + 5	d_1 + 20	8 ± 1,5	VR3	R	**404002**
		360	6	10,5	6,5	d_1 + 5	d_1 + 20	8 ± 1,5	VR3	V	**404006**
390	**430**	360	14,3	25	15	d_1 + 10	d_1 + 45	20 ± 4	VR1	R	**404000**
		360	14,3	25	15	d_1 + 10	d_1 + 45	20 ± 4	VR1	V	**404004**
385	**390**	376	32,5	65	30	d_1 + 24	d_1 + 115	50 ± 12	VR4	R	**403853**
		376	32,5	65	21	d_1 + 24	d_1 + 115	50 ± 12	VR6	R	**470386**
390	**395**	381	32,5	65	30	d_1 + 24	d_1 + 115	50 ± 12	VR4	R	**403903**
		381	32,5	65	21	d_1 + 24	d_1 + 115	50 ± 12	VR6	R	**470391**

V-ring seals – metric dimensions, for North American market

d_1 **395 – 540** mm

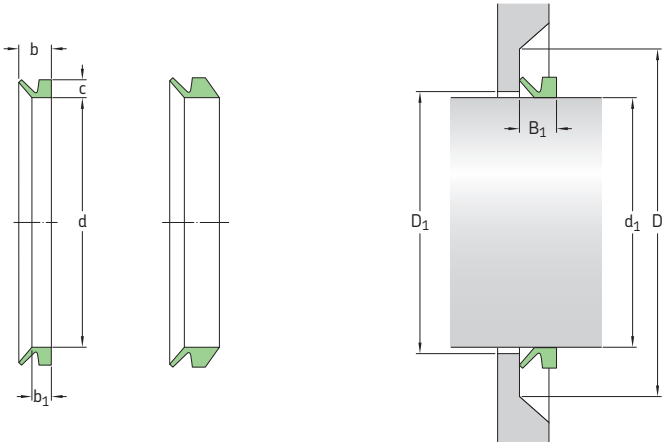

Dimensions									Design	Lip code	Designation
Shaft diameter range d_1		Seal inside diameter, free state d	Seal seat width b_1	Nominal seal width b	Nominal seal height c	Clearance D_1 max	Counterface D min	Seal fitted width B_1			
over	incl.										
mm									–	–	–
395	**400**	386	32,5	65	30	$d_1 + 24$	$d_1 + 115$	50 ± 12	VR4	R	**403953**
		386	32,5	65	21	$d_1 + 24$	$d_1 + 115$	50 ± 12	VR6	R	**470396**
400	**405**	391	32,5	65	30	$d_1 + 24$	$d_1 + 115$	50 ± 12	VR4	R	**404003**
		391	32,5	65	21	$d_1 + 24$	$d_1 + 115$	50 ± 12	VR6	R	**470401**
405	**410**	396	32,5	65	30	$d_1 + 24$	$d_1 + 115$	50 ± 12	VR4	R	**404053**
		396	32,5	65	21	$d_1 + 24$	$d_1 + 115$	50 ± 12	VR6	R	**470406**
410	**415**	401	32,5	65	30	$d_1 + 24$	$d_1 + 115$	50 ± 12	VR4	R	**404103**
		401	32,5	65	21	$d_1 + 24$	$d_1 + 115$	50 ± 12	VR6	R	**470411**
415	**420**	405	32,5	65	30	$d_1 + 24$	$d_1 + 115$	50 ± 12	VR4	R	**404153**
		405	32,5	65	21	$d_1 + 24$	$d_1 + 115$	50 ± 12	VR6	R	**470416**
420	**425**	410	32,5	65	30	$d_1 + 24$	$d_1 + 115$	50 ± 12	VR4	R	**404203**
		410	32,5	65	21	$d_1 + 24$	$d_1 + 115$	50 ± 12	VR6	R	**470421**
425	**430**	415	32,5	65	30	$d_1 + 24$	$d_1 + 115$	50 ± 12	VR4	R	**404253**
		415	32,5	65	21	$d_1 + 24$	$d_1 + 115$	50 ± 12	VR6	R	**470426**
410	**440**	382	6	10,5	6,5	$d_1 + 5$	$d_1 + 20$	8 ± 1,5	VR3	R	**404252**
		382	6	10,5	6,5	$d_1 + 5$	$d_1 + 20$	8 ± 1,5	VR3	V	**404256**
440	**475**	405	6	10,5	6,5	$d_1 + 5$	$d_1 + 20$	8 ± 1,5	VR3	R	**404502**
		405	6	10,5	6,5	$d_1 + 5$	$d_1 + 20$	8 ± 1,5	VR3	V	**404506**
430	**480**	405	14,3	25	15	$d_1 + 10$	$d_1 + 45$	20 ± 4	VR1	R	**404500**
		405	14,3	25	15	$d_1 + 10$	$d_1 + 45$	20 ± 4	VR1	V	**404504**
430	**435**	420	32,5	65	30	$d_1 + 24$	$d_1 + 115$	50 ± 12	VR4	R	**404303**
		420	32,5	65	21	$d_1 + 24$	$d_1 + 115$	50 ± 12	VR6	R	**470431**
435	**440**	425	32,5	65	30	$d_1 + 24$	$d_1 + 115$	50 ± 12	VR4	R	**404353**
		425	32,5	65	21	$d_1 + 24$	$d_1 + 115$	50 ± 12	VR6	R	**470436**
440	**445**	429	32,5	65	30	$d_1 + 24$	$d_1 + 115$	50 ± 12	VR4	R	**404403**
		429	32,5	65	21	$d_1 + 24$	$d_1 + 115$	50 ± 12	VR6	R	**470441**
445	**450**	434	32,5	65	30	$d_1 + 24$	$d_1 + 115$	50 ± 12	VR4	R	**404453**
		434	32,5	65	21	$d_1 + 24$	$d_1 + 115$	50 ± 12	VR6	R	**470446**

Dimensions									Design	Lip code	Designation
Shaft diameter range		Seal inside diameter, free state	Seal seat width	Nominal seal width	Nominal seal height	Clearance	Counterface	Seal fitted width			
d_1 over	incl.	d	b_1	b	c	D_1 max	D min	B_1			
mm									–	–	–
450	**455**	439	32,5	65	30	$d_1 + 24$	$d_1 + 115$	50 ± 12	VR4	R	**404503**
		439	32,5	65	21	$d_1 + 24$	$d_1 + 115$	50 ± 12	VR6	R	**470451**
455	**460**	444	32,5	65	30	$d_1 + 24$	$d_1 + 115$	50 ± 12	VR4	R	**404553**
		444	32,5	65	21	$d_1 + 24$	$d_1 + 115$	50 ± 12	VR6	R	**470456**
460	**465**	448	32,5	65	30	$d_1 + 24$	$d_1 + 115$	50 ± 12	VR4	R	**404603**
		448	32,5	65	21	$d_1 + 24$	$d_1 + 115$	50 ± 12	VR6	R	**470461**
465	**470**	453	32,5	65	30	$d_1 + 24$	$d_1 + 115$	50 ± 12	VR4	R	**404653**
		453	32,5	65	21	$d_1 + 24$	$d_1 + 115$	50 ± 12	VR6	R	**470466**
470	**475**	458	32,5	65	30	$d_1 + 24$	$d_1 + 115$	50 ± 12	VR4	R	**404703**
		458	32,5	65	21	$d_1 + 24$	$d_1 + 115$	50 ± 12	VR6	R	**470471**
475	**480**	463	32,5	65	30	$d_1 + 24$	$d_1 + 115$	50 ± 12	VR4	R	**404753**
		463	32,5	65	21	$d_1 + 24$	$d_1 + 115$	50 ± 12	VR6	R	**470476**
475	**510**	450	6	10,5	6,5	$d_1 + 5$	$d_1 + 20$	8 ± 1,5	VR3	R	**405002**
		450	6	10,5	6,5	$d_1 + 5$	$d_1 + 20$	8 ± 1,5	VR3	V	**405006**
510	**540**	472	6	10,5	6,5	$d_1 + 5$	$d_1 + 20$	8 ± 1,5	VR3	R	**405252**
		472	6	10,5	6,5	$d_1 + 5$	$d_1 + 20$	8 ± 1,5	VR3	V	**405256**
480	**530**	450	14,3	25	15	$d_1 + 10$	$d_1 + 45$	20 ± 4	VR1	R	**405000**
		450	14,3	25	15	$d_1 + 10$	$d_1 + 45$	20 ± 4	VR1	V	**405004**
480	**485**	468	32,5	65	30	$d_1 + 24$	$d_1 + 115$	50 ± 12	VR4	R	**404803**
		468	32,5	65	21	$d_1 + 24$	$d_1 + 115$	50 ± 12	VR6	R	**470481**
485	**490**	473	32,5	65	30	$d_1 + 24$	$d_1 + 115$	50 ± 12	VR4	R	**404853**
		473	32,5	65	21	$d_1 + 24$	$d_1 + 115$	50 ± 12	VR6	R	**470486**
490	**495**	478	32,5	65	30	$d_1 + 24$	$d_1 + 115$	50 ± 12	VR4	R	**404903**
		478	32,5	65	21	$d_1 + 24$	$d_1 + 115$	50 ± 12	VR6	R	**470491**
495	**500**	483	32,5	65	30	$d_1 + 24$	$d_1 + 115$	50 ± 12	VR4	R	**404953**
		483	32,5	65	21	$d_1 + 24$	$d_1 + 115$	50 ± 12	VR6	R	**470496**
500	**505**	488	32,5	65	30	$d_1 + 24$	$d_1 + 115$	50 ± 12	VR4	R	**405003**
		488	32,5	65	21	$d_1 + 24$	$d_1 + 115$	50 ± 12	VR6	R	**470501**
505	**510**	493	32,5	65	30	$d_1 + 24$	$d_1 + 115$	50 ± 12	VR4	R	**405053**
		493	32,5	65	21	$d_1 + 24$	$d_1 + 115$	50 ± 12	VR6	R	**470506**
510	**515**	497	32,5	65	30	$d_1 + 24$	$d_1 + 115$	50 ± 12	VR4	R	**405103**
		497	32,5	65	21	$d_1 + 24$	$d_1 + 115$	50 ± 12	VR6	R	**470511**
515	**520**	502	32,5	65	30	$d_1 + 24$	$d_1 + 115$	50 ± 12	VR4	R	**405153**
		502	32,5	65	21	$d_1 + 24$	$d_1 + 115$	50 ± 12	VR6	R	**470516**
520	**525**	507	32,5	65	30	$d_1 + 24$	$d_1 + 115$	50 ± 12	VR4	R	**405203**
		507	32,5	65	21	$d_1 + 24$	$d_1 + 115$	50 ± 12	VR6	R	**470521**
525	**530**	512	32,5	65	30	$d_1 + 24$	$d_1 + 115$	50 ± 12	VR4	R	**405253**
		512	32,5	65	21	$d_1 + 24$	$d_1 + 115$	50 ± 12	VR6	R	**470526**
540	**575**	495	6	10,5	6,5	$d_1 + 5$	$d_1 + 20$	8 ± 1,5	VR3	R	**405502**
		495	6	10,5	6,5	$d_1 + 5$	$d_1 + 20$	8 ± 1,5	VR3	V	**405506**
530	**580**	495	14,3	25	15	$d_1 + 10$	$d_1 + 45$	20 ± 4	VR1	R	**405500**
		495	14,3	25	15	$d_1 + 10$	$d_1 + 45$	20 ± 4	VR1	V	**405504**
530	**535**	517	32,5	65	30	$d_1 + 24$	$d_1 + 115$	50 ± 12	VR4	R	**405303**
		517	32,5	65	21	$d_1 + 24$	$d_1 + 115$	50 ± 12	VR6	R	**470531**
535	**540**	521	32,5	65	30	$d_1 + 24$	$d_1 + 115$	50 ± 12	VR4	R	**405353**
		521	32,5	65	21	$d_1 + 24$	$d_1 + 115$	50 ± 12	VR6	R	**470536**

V-ring seals – metric dimensions, for North American market

d_1 **540 – 758** mm

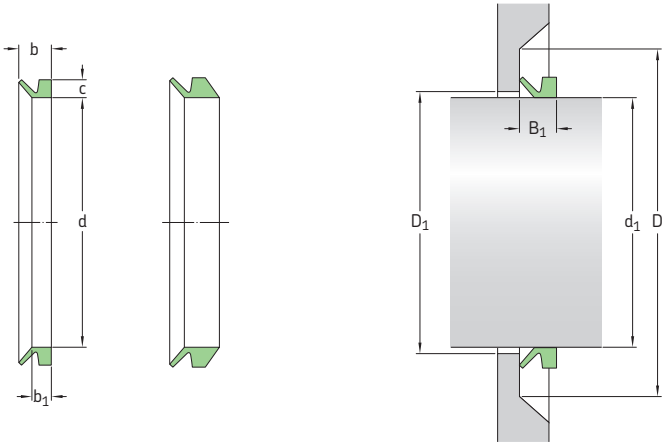

Dimensions									Design	Lip code	Designation
Shaft diameter range d_1		Seal inside diameter, free state d	Seal seat width b_1	Nominal seal width b	Nominal seal height c	Clearance D_1 max	Counterface D min	Seal fitted width B_1			
over	incl.										
mm									–	–	–
540	**545**	526	32,5	65	30	d_1 + 24	d_1 + 115	50 ± 12	VR4	R	**405403**
		526	32,5	65	21	d_1 + 24	d_1 + 115	50 ± 12	VR6	R	**470541**
545	**550**	531	32,5	65	30	d_1 + 24	d_1 + 115	50 ± 12	VR4	R	**405453**
		531	32,5	65	21	d_1 + 24	d_1 + 115	50 ± 12	VR6	R	**470546**
550	**555**	536	32,5	65	30	d_1 + 24	d_1 + 115	50 ± 12	VR4	R	**405503**
		536	32,5	65	21	d_1 + 24	d_1 + 115	50 ± 12	VR6	R	**470551**
555	**560**	541	32,5	65	30	d_1 + 24	d_1 + 115	50 ± 12	VR4	R	**405553**
		541	32,5	65	21	d_1 + 24	d_1 + 115	50 ± 12	VR6	R	**470556**
560	**565**	546	32,5	65	30	d_1 + 24	d_1 + 115	50 ± 12	VR4	R	**405603**
		546	32,5	65	21	d_1 + 24	d_1 + 115	50 ± 12	VR6	R	**470561**
565	**570**	550	32,5	65	30	d_1 + 24	d_1 + 115	50 ± 12	VR4	R	**405653**
		550	32,5	65	21	d_1 + 24	d_1 + 115	50 ± 12	VR6	R	**470566**
570	**575**	555	32,5	65	30	d_1 + 24	d_1 + 115	50 ± 12	VR4	R	**405703**
		555	32,5	65	21	d_1 + 24	d_1 + 115	50 ± 12	VR6	R	**470571**
575	**580**	560	32,5	65	30	d_1 + 24	d_1 + 115	50 ± 12	VR4	R	**405753**
		560	32,5	65	21	d_1 + 24	d_1 + 115	50 ± 12	VR6	R	**470576**
575	**625**	540	6	10,5	6,5	d_1 + 5	d_1 + 20	8 ± 1,5	VR3	R	**406002**
		540	6	10,5	6,5	d_1 + 5	d_1 + 20	8 ± 1,5	VR3	V	**406006**
580	**630**	540	14,3	25	15	d_1 + 10	d_1 + 45	20 ± 4	VR1	R	**406000**
		540	14,3	25	15	d_1 + 10	d_1 + 45	20 ± 4	VR1	V	**406004**
580	**585**	565	32,5	65	30	d_1 + 24	d_1 + 115	50 ± 12	VR4	R	**405803**
		565	32,5	65	21	d_1 + 24	d_1 + 115	50 ± 12	VR6	R	**470581**
585	**590**	570	32,5	65	30	d_1 + 24	d_1 + 115	50 ± 12	VR4	R	**405853**
		570	32,5	65	21	d_1 + 24	d_1 + 115	50 ± 12	VR6	R	**470586**
590	**600**	575	32,5	65	30	d_1 + 24	d_1 + 115	50 ± 12	VR4	R	**405903**
		575	32,5	65	21	d_1 + 24	d_1 + 115	50 ± 12	VR6	R	**470591**
600	**610**	582	32,5	65	30	d_1 + 24	d_1 + 115	50 ± 12	VR4	R	**406003**
		582	32,5	65	21	d_1 + 24	d_1 + 115	50 ± 12	VR6	R	**470601**

Dimensions									Design	Lip code	Designation
Shaft diameter range		Seal inside diameter, free state	Seal seat width	Nominal seal width	Nominal seal height	Clearance	Counterface	Seal fitted width			
d_1		d	b_1	b	c	D_1	D	B_1			
over	incl.					max	min				
mm									–	–	–
610	**620**	592	32,5	65	30	$d_1 + 24$	$d_1 + 115$	50 ± 12	VR4	R	**406103**
		592	32,5	65	21	$d_1 + 24$	$d_1 + 115$	50 ± 12	VR6	R	**470611**
620	**630**	602	32,5	65	30	$d_1 + 24$	$d_1 + 115$	50 ± 12	VR4	R	**406203**
		602	32,5	65	21	$d_1 + 24$	$d_1 + 115$	50 ± 12	VR6	R	**470621**
615	**675**	600	6	10,5	6,5	$d_1 + 5$	$d_1 + 20$	8 ± 1,5	VR3	R	**406502**
		600	6	10,5	6,5	$d_1 + 5$	$d_1 + 20$	8 ± 1,5	VR3	V	**406506**
630	**665**	600	14,3	25	15	$d_1 + 10$	$d_1 + 45$	20 ± 4	VR1	R	**406500**
		600	14,3	25	15	$d_1 + 10$	$d_1 + 45$	20 ± 4	VR1	V	**406504**
630	**640**	612	32,5	65	30	$d_1 + 24$	$d_1 + 115$	50 ± 12	VR4	R	**406303**
		612	32,5	65	21	$d_1 + 24$	$d_1 + 115$	50 ± 12	VR6	R	**470631**
640	**650**	621	32,5	65	30	$d_1 + 24$	$d_1 + 115$	50 ± 12	VR4	R	**406403**
		621	32,5	65	21	$d_1 + 24$	$d_1 + 115$	50 ± 12	VR6	R	**470641**
650	**660**	631	32,5	65	30	$d_1 + 24$	$d_1 + 115$	50 ± 12	VR4	R	**406503**
		631	32,5	65	21	$d_1 + 24$	$d_1 + 115$	50 ± 12	VR6	R	**470651**
660	**670**	640	32,5	65	30	$d_1 + 24$	$d_1 + 115$	50 ± 12	VR4	R	**406603**
		640	32,5	65	21	$d_1 + 24$	$d_1 + 115$	50 ± 12	VR6	R	**470661**
675	**710**	630	6	10,5	6,5	$d_1 + 5$	$d_1 + 20$	8 ± 1,5	VR3	R	**407002**
		630	6	10,5	6,5	$d_1 + 5$	$d_1 + 20$	8 ± 1,5	VR3	V	**407006**
665	**705**	630	14,3	25	15	$d_1 + 10$	$d_1 + 45$	20 ± 4	VR1	R	**407000**
		630	14,3	25	15	$d_1 + 10$	$d_1 + 45$	20 ± 4	VR1	V	**407004**
670	**680**	650	32,5	65	30	$d_1 + 24$	$d_1 + 115$	50 ± 12	VR4	R	**406703**
		650	32,5	65	21	$d_1 + 24$	$d_1 + 115$	50 ± 12	VR6	R	**470671**
680	**690**	660	32,5	65	30	$d_1 + 24$	$d_1 + 115$	50 ± 12	VR4	R	**406803**
		660	32,5	65	21	$d_1 + 24$	$d_1 + 115$	50 ± 12	VR6	R	**470681**
690	**700**	670	32,5	65	30	$d_1 + 24$	$d_1 + 115$	50 ± 12	VR4	R	**406903**
		670	32,5	65	21	$d_1 + 24$	$d_1 + 115$	50 ± 12	VR6	R	**470691**
700	**710**	680	32,5	65	30	$d_1 + 24$	$d_1 + 115$	50 ± 12	VR4	R	**407003**
		680	32,5	65	21	$d_1 + 24$	$d_1 + 115$	50 ± 12	VR6	R	**470701**
710	**740**	670	6	10,5	6,5	$d_1 + 5$	$d_1 + 20$	8 ± 1,5	VR3	R	**407252**
		670	6	10,5	6,5	$d_1 + 5$	$d_1 + 20$	8 ± 1,5	VR3	V	**407256**
705	**745**	670	14,3	25	15	$d_1 + 10$	$d_1 + 45$	20 ± 4	VR1	R	**407250**
		670	14,3	25	15	$d_1 + 10$	$d_1 + 45$	20 ± 4	VR1	V	**407254**
710	**720**	689	32,5	65	30	$d_1 + 24$	$d_1 + 115$	50 ± 12	VR4	R	**407103**
		689	32,5	65	21	$d_1 + 24$	$d_1 + 115$	50 ± 12	VR6	R	**470711**
720	**730**	699	32,5	65	30	$d_1 + 24$	$d_1 + 115$	50 ± 12	VR4	R	**407203**
		699	32,5	65	21	$d_1 + 24$	$d_1 + 115$	50 ± 12	VR6	R	**470721**
730	**740**	709	32,5	65	30	$d_1 + 24$	$d_1 + 115$	50 ± 12	VR4	R	**407303**
		709	32,5	65	21	$d_1 + 24$	$d_1 + 115$	50 ± 12	VR6	R	**470731**
740	**750**	718	32,5	65	30	$d_1 + 24$	$d_1 + 115$	50 ± 12	VR4	R	**407403**
		718	32,5	65	21	$d_1 + 24$	$d_1 + 115$	50 ± 12	VR6	R	**470741**
740	**775**	705	6	10,5	6,5	$d_1 + 5$	$d_1 + 20$	8 ± 1,5	VR3	R	**407502**
		705	6	10,5	6,5	$d_1 + 5$	$d_1 + 20$	8 ± 1,5	VR3	V	**407506**
745	**785**	705	14,3	25	15	$d_1 + 10$	$d_1 + 45$	20 ± 4	VR1	R	**407500**
		705	14,3	25	15	$d_1 + 10$	$d_1 + 45$	20 ± 4	VR1	V	**407504**
750	**758**	728	32,5	65	30	$d_1 + 24$	$d_1 + 115$	50 ± 12	VR4	R	**407503**
		728	32,5	65	21	$d_1 + 24$	$d_1 + 115$	50 ± 12	VR6	R	**470751**

V-ring seals – metric dimensions, for North American market

d_1 **758 – 1 045** mm

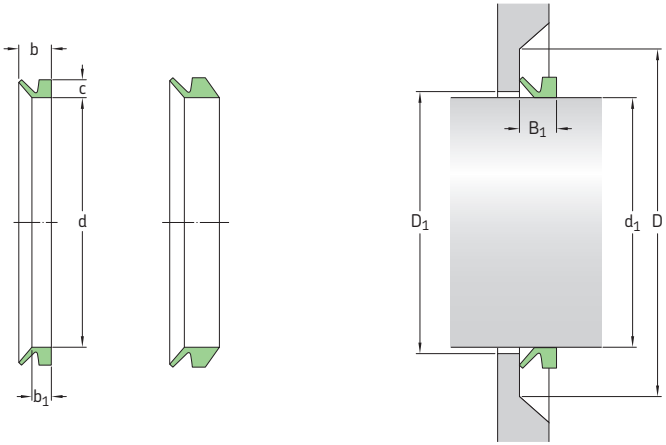

Dimensions									Design	Lip code	Designation
Shaft diameter range d_1		Seal inside diameter, free state d	Seal seat width b_1	Nominal seal width b	Nominal seal height c	Clearance D_1 max	Counterface D min	Seal fitted width B_1			
over	incl.										
mm									–	–	–
758	**766**	735	32,5	65	30	d_1 + 24	d_1 + 115	50 ± 12	VR4	R	**407603**
		735	32,5	65	21	d_1 + 24	d_1 + 115	50 ± 12	VR6	R	**470761**
766	**774**	743	32,5	65	30	d_1 + 24	d_1 + 115	50 ± 12	VR4	R	**407703**
		743	32,5	65	21	d_1 + 24	d_1 + 115	50 ± 12	VR6	R	**470771**
774	**783**	751	32,5	65	30	d_1 + 24	d_1 + 115	50 ± 12	VR4	R	**407803**
		751	32,5	65	21	d_1 + 24	d_1 + 115	50 ± 12	VR6	R	**470781**
783	**792**	759	32,5	65	30	d_1 + 24	d_1 + 115	50 ± 12	VR4	R	**407903**
		759	32,5	65	21	d_1 + 24	d_1 + 115	50 ± 12	VR6	R	**470791**
775	**825**	745	6	10,5	6,5	d_1 + 5	d_1 + 20	8 ± 1,5	VR3	R	**408002**
		745	6	10,5	6,5	d_1 + 5	d_1 + 20	8 ± 1,5	VR3	V	**408006**
785	**830**	745	14,3	25	15	d_1 + 10	d_1 + 45	20 ± 4	VR1	R	**408000**
		745	14,3	25	15	d_1 + 10	d_1 + 45	20 ± 4	VR1	V	**408004**
792	**801**	768	32,5	65	30	d_1 + 24	d_1 + 115	50 ± 12	VR4	R	**408003**
		768	32,5	65	21	d_1 + 24	d_1 + 115	50 ± 12	VR6	R	**470801**
801	**810**	777	32,5	65	30	d_1 + 24	d_1 + 115	50 ± 12	VR4	R	**408103**
		777	32,5	65	21	d_1 + 24	d_1 + 115	50 ± 12	VR6	R	**470811**
810	**821**	786	32,5	65	30	d_1 + 24	d_1 + 115	50 ± 12	VR4	R	**408203**
		786	32,5	65	21	d_1 + 24	d_1 + 115	50 ± 12	VR6	R	**470821**
821	**831**	796	32,5	65	30	d_1 + 24	d_1 + 115	50 ± 12	VR4	R	**408303**
		796	32,5	65	21	d_1 + 24	d_1 + 115	50 ± 12	VR6	R	**470831**
825	**875**	785	6	10,5	6,5	d_1 + 5	d_1 + 20	8 ± 1,5	VR3	R	**408502**
		785	6	10,5	6,5	d_1 + 5	d_1 + 20	8 ± 1,5	VR3	V	**408506**
830	**875**	785	14,3	25	15	d_1 + 10	d_1 + 45	20 ± 4	VR1	R	**408500**
		785	14,3	25	15	d_1 + 10	d_1 + 45	20 ± 4	VR1	V	**408504**
831	**841**	805	32,5	65	30	d_1 + 24	d_1 + 115	50 ± 12	VR4	R	**408403**
		805	32,5	65	21	d_1 + 24	d_1 + 115	50 ± 12	VR6	R	**470841**
841	**851**	814	32,5	65	30	d_1 + 24	d_1 + 115	50 ± 12	VR4	R	**408503**
		814	32,5	65	21	d_1 + 24	d_1 + 115	50 ± 12	VR6	R	**470851**

Dimensions									Design	Lip code	Designation
Shaft diameter range		Seal inside diameter, free state	Seal seat width	Nominal seal width	Nominal seal height	Clearance	Counterface	Seal fitted width			
d_1		d	b_1	b	c	D_1	D	B_1			
over	incl.					max	min				
mm									–	–	–
851	**861**	824	32,5	65	30	d_1 + 24	d_1 + 115	50 ± 12	VR4	R	**408603**
		824	32,5	65	21	d_1 + 24	d_1 + 115	50 ± 12	VR6	R	**470861**
861	**871**	833	32,5	65	30	d_1 + 24	d_1 + 115	50 ± 12	VR4	R	**408703**
		833	32,5	65	21	d_1 + 24	d_1 + 115	50 ± 12	VR6	R	**470871**
871	**882**	843	32,5	65	30	d_1 + 24	d_1 + 115	50 ± 12	VR4	R	**408803**
		843	32,5	65	21	d_1 + 24	d_1 + 115	50 ± 12	VR6	R	**470881**
875	**925**	825	6	10,5	6,5	d_1 + 5	d_1 + 20	8 ± 1,5	VR3	R	**409002**
		825	6	10,5	6,5	d_1 + 5	d_1 + 20	8 ± 1,5	VR3	V	**409006**
875	**920**	825	14,3	25	15	d_1 + 10	d_1 + 45	20 ± 4	VR1	R	**409000**
		825	14,3	25	15	d_1 + 10	d_1 + 45	20 ± 4	VR1	V	**409004**
882	**892**	853	32,5	65	30	d_1 + 24	d_1 + 115	50 ± 12	VR4	R	**408903**
		853	32,5	65	21	d_1 + 24	d_1 + 115	50 ± 12	VR6	R	**470891**
892	**912**	871	32,5	65	30	d_1 + 24	d_1 + 115	50 ± 12	VR4	R	**409003**
		871	32,5	65	21	d_1 + 24	d_1 + 115	50 ± 12	VR6	R	**470901**
912	**922**	880	32,5	65	30	d_1 + 24	d_1 + 115	50 ± 12	VR4	R	**409203**
		880	32,5	65	21	d_1 + 24	d_1 + 115	50 ± 12	VR6	R	**470921**
925	**975**	865	6	10,5	6,5	d_1 + 5	d_1 + 20	8 ± 1,5	VR3	R	**409502**
		865	6	10,5	6,5	d_1 + 5	d_1 + 20	8 ± 1,5	VR3	V	**409506**
920	**965**	865	14,3	25	15	d_1 + 10	d_1 + 45	20 ± 4	VR1	R	**409500**
		865	14,3	25	15	d_1 + 10	d_1 + 45	20 ± 4	VR1	V	**409504**
922	**933**	890	32,5	65	30	d_1 + 24	d_1 + 115	50 ± 12	VR4	R	**409303**
		890	32,5	65	21	d_1 + 24	d_1 + 115	50 ± 12	VR6	R	**470931**
933	**944**	900	32,5	65	30	d_1 + 24	d_1 + 115	50 ± 12	VR4	R	**409403**
		900	32,5	65	21	d_1 + 24	d_1 + 115	50 ± 12	VR6	R	**470941**
944	**955**	911	32,5	65	30	d_1 + 24	d_1 + 115	50 ± 12	VR4	R	**409503**
		911	32,5	65	21	d_1 + 24	d_1 + 115	50 ± 12	VR6	R	**470951**
955	**966**	921	32,5	65	30	d_1 + 24	d_1 + 115	50 ± 12	VR4	R	**409603**
		921	32,5	65	21	d_1 + 24	d_1 + 115	50 ± 12	VR6	R	**470961**
975	**1025**	910	6	10,5	6,5	d_1 + 5	d_1 + 20	8 ± 1,5	VR3	R	**410002**
		910	6	10,5	6,5	d_1 + 5	d_1 + 20	8 ± 1,5	VR3	V	**410006**
965	**1015**	910	14,3	25	15	d_1 + 10	d_1 + 45	20 ± 4	VR1	R	**410000**
		910	14,3	25	15	d_1 + 10	d_1 + 45	20 ± 4	VR1	V	**410004**
966	**977**	932	32,5	65	30	d_1 + 24	d_1 + 115	50 ± 12	VR4	R	**409703**
		932	32,5	65	21	d_1 + 24	d_1 + 115	50 ± 12	VR6	R	**470971**
977	**988**	942	32,5	65	30	d_1 + 24	d_1 + 115	50 ± 12	VR4	R	**409803**
		942	32,5	65	21	d_1 + 24	d_1 + 115	50 ± 12	VR6	R	**470981**
988	**999**	953	32,5	65	30	d_1 + 24	d_1 + 115	50 ± 12	VR4	R	**409903**
		953	32,5	65	21	d_1 + 24	d_1 + 115	50 ± 12	VR6	R	**470991**
999	**1 010**	963	32,5	65	30	d_1 + 24	d_1 + 115	50 ± 12	VR4	R	**410003**
		963	32,5	65	21	d_1 + 24	d_1 + 115	50 ± 12	VR6	R	**471001**
1 010	**1 025**	973	32,5	65	30	d_1 + 24	d_1 + 115	50 ± 12	VR4	R	**410203**
		973	32,5	65	21	d_1 + 24	d_1 + 115	50 ± 12	VR6	R	**471021**
1 025	**1 075**	955	6	10,5	6,5	d_1 + 5	d_1 + 20	8 ± 1,5	VR3	R	**410502**
		955	6	10,5	6,5	d_1 + 5	d_1 + 20	8 ± 1,5	VR3	V	**410506**
1 015	**1 065**	955	14,3	25	15	d_1 + 10	d_1 + 45	20 ± 4	VR1	R	**410500**
1 025	**1 045**	990	32,5	65	30	d_1 + 24	d_1 + 115	50 ± 12	VR4	R	**410403**
		990	32,5	65	21	d_1 + 24	d_1 + 115	50 ± 12	VR6	R	**471041**

V-ring seals – metric dimensions, for North American market

d_1 **1 045 – 1 540** mm

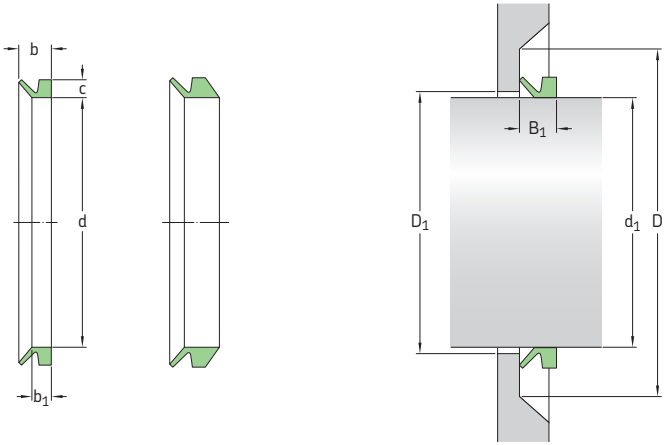

Dimensions									Design	Lip code	Designation
Shaft diameter range d_1		Seal inside diameter, free state d	Seal seat width b_1	Nominal seal width b	Nominal seal height c	Clearance D_1 max	Counterface D min	Seal fitted width B_1			
over	incl.										
mm									–	–	–
1 045	**1 065**	1 008	32,5	65	30	d_1 + 24	d_1 + 115	50 ± 12	VR4	R	**410603**
		1 008	32,5	65	21	d_1 + 24	d_1 + 115	50 ± 12	VR6	R	**471061**
1 075	**1 125**	1 000	6	10,5	6,5	d_1 + 5	d_1 + 20	8 ± 1,5	VR3	R	**411002**
		1 000	6	10,5	6,5	d_1 + 5	d_1 + 20	8 ± 1,5	VR3	V	**411006**
1 065	**1 115**	1 000	14,3	25	15	d_1 + 10	d_1 + 45	20 ± 4	VR1	R	**411000**
		1 027	32,5	65	30	d_1 + 24	d_1 + 115	50 ± 12	VR4	R	**410803**
		1 027	32,5	65	21	d_1 + 24	d_1 + 115	50 ± 12	VR6	R	**471081**
1 085	**1 105**	1 045	32,5	65	30	d_1 + 24	d_1 + 115	50 ± 12	VR4	R	**411003**
		1 045	32,5	65	21	d_1 + 24	d_1 + 115	50 ± 12	VR6	R	**471101**
1 105	**1 125**	1 065	32,5	65	30	d_1 + 24	d_1 + 115	50 ± 12	VR4	R	**411203**
		1 065	32,5	65	21	d_1 + 24	d_1 + 115	50 ± 12	VR6	R	**471121**
1 125	**1 175**	1 045	6	10,5	6,5	d_1 + 5	d_1 + 20	8 ± 1,5	VR3	R	**411502**
		1 045	6	10,5	6,5	d_1 + 5	d_1 + 20	8 ± 1,5	VR3	V	**411506**
1 115	**1 165**	1 045	14,3	25	15	d_1 + 10	d_1 + 45	20 ± 4	VR1	R	**411500**
1 125	**1 145**	1 084	32,5	65	30	d_1 + 24	d_1 + 115	50 ± 12	VR4	R	**411403**
		1 084	32,5	65	21	d_1 + 24	d_1 + 115	50 ± 12	VR6	R	**471141**
1 145	**1 165**	1 103	32,5	65	30	d_1 + 24	d_1 + 115	50 ± 12	VR4	R	**411603**
		1 103	32,5	65	21	d_1 + 24	d_1 + 115	50 ± 12	VR6	R	**471161**
1 175	**1 225**	1 090	6	10,5	6,5	d_1 + 5	d_1 + 20	8 ± 1,5	VR3	R	**412002**
		1 090	6	10,5	6,5	d_1 + 5	d_1 + 20	8 ± 1,5	VR3	V	**412006**
1 165	**1 215**	1 090	14,3	25	15	d_1 + 10	d_1 + 45	20 ± 4	VR1	R	**412000**
1 165	**1 185**	1 121	32,5	65	30	d_1 + 24	d_1 + 115	50 ± 12	VR4	R	**411803**
		1 121	32,5	65	21	d_1 + 24	d_1 + 115	50 ± 12	VR6	R	**471181**
1 185	**1 205**	1 139	32,5	65	30	d_1 + 24	d_1 + 115	50 ± 12	VR4	R	**412003**
		1 139	32,5	65	21	d_1 + 24	d_1 + 115	50 ± 12	VR6	R	**471201**
1 205	**1 225**	1 157	32,5	65	30	d_1 + 24	d_1 + 115	50 ± 12	VR4	R	**412203**
		1 157	32,5	65	21	d_1 + 24	d_1 + 115	50 ± 12	VR6	R	**471221**

Dimensions									Design	Lip code	Designation
Shaft diameter range		Seal inside diameter, free state	Seal seat width	Nominal seal width	Nominal seal height	Clearance	Counterface	Seal fitted width			
d_1 over	incl.	d	b_1	b	c	D_1 max	D min	B_1			
mm									–	–	–
1 225	**1 275**	1 135	6	10,5	6,5	d_1 + 5	d_1 + 20	8 ± 1,5	VR3	R	**412502**
		1 135	6	10,5	6,5	d_1 + 5	d_1 + 20	8 ± 1,5	VR3	V	**412506**
1 215	**1 270**	1 135	14,3	25	15	d_1 + 10	d_1 + 45	20 ± 4	VR1	R	**412500**
1 225	**1 245**	1 176	32,5	65	30	d_1 + 24	d_1 + 115	50 ± 12	VR4	R	**412403**
		1 176	32,5	65	21	d_1 + 24	d_1 + 115	50 ± 12	VR6	R	**471241**
1 245	**1 270**	1 195	32,5	65	30	d_1 + 24	d_1 + 115	50 ± 12	VR4	R	**412603**
		1 195	32,5	65	21	d_1 + 24	d_1 + 115	50 ± 12	VR6	R	**471261**
1 270	**1295**	1 218	32,5	65	30	d_1 + 24	d_1 + 115	50 ± 12	VR4	R	**412803**
		1 218	32,5	65	21	d_1 + 24	d_1 + 115	50 ± 12	VR6	R	**471281**
1 275	**1 325**	1 180	6	10,5	6,5	d_1 + 5	d_1 + 20	8 ± 1,5	VR3	R	**413002**
		1 180	6	10,5	6,5	d_1 + 5	d_1 + 20	8 ± 1,5	VR3	V	**413006**
1 270	**1 320**	1 180	14,3	25	15	d_1 + 10	d_1 + 45	20 ± 4	VR1	R	**413000**
1 295	**1 315**	1 240	32,5	65	30	d_1 + 24	d_1 + 115	50 ± 12	VR4	R	**413003**
		1 240	32,5	65	21	d_1 + 24	d_1 + 115	50 ± 12	VR6	R	**471301**
1 315	**1 340**	1 259	32,5	65	30	d_1 + 24	d_1 + 115	50 ± 12	VR4	R	**413253**
		1 259	32,5	65	21	d_1 + 24	d_1 + 115	50 ± 12	VR6	R	**471326**
1 325	**1 375**	1 225	6	10,5	6,5	d_1 + 5	d_1 + 20	8 ± 1,5	VR3	R	**413502**
		1 225	6	10,5	6,5	d_1 + 5	d_1 + 20	8 ± 1,5	VR3	V	**413506**
1 320	**1 370**	1 225	14,3	25	15	d_1 + 10	d_1 + 45	20 ± 4	VR1	R	**413500**
1 340	**1 365**	1 281	32,5	65	30	d_1 + 24	d_1 + 115	50 ± 12	VR4	R	**413503**
		1 281	32,5	65	21	d_1 + 24	d_1 + 115	50 ± 12	VR6	R	**471351**
1 365	**1 390**	1 305	32,5	65	30	d_1 + 24	d_1 + 115	50 ± 12	VR4	R	**413753**
		1 305	32,5	65	21	d_1 + 24	d_1 + 115	50 ± 12	VR6	R	**471376**
1 375	**1 425**	1 270	6	10,5	6,5	d_1 + 5	d_1 + 20	8 ± 1,5	VR3	R	**414002**
		1 270	6	10,5	6,5	d_1 + 5	d_1 + 20	8 ± 1,5	VR3	V	**414006**
1 370	**1 420**	1 270	14,3	25	15	d_1 + 10	d_1 + 45	20 ± 4	VR1	R	**414000**
1 390	**1 415**	1 328	32,5	65	30	d_1 + 24	d_1 + 115	50 ± 12	VR4	R	**414003**
		1 328	32,5	65	21	d_1 + 24	d_1 + 115	50 ± 12	VR6	R	**471401**
1 415	**1 440**	1 350	32,5	65	30	d_1 + 24	d_1 + 115	50 ± 12	VR4	R	**414253**
		1 350	32,5	65	21	d_1 + 24	d_1 + 115	50 ± 12	VR6	R	**471426**
1 425	**1 475**	1 315	6	10,5	6,5	d_1 + 5	d_1 + 20	8 ± 1,5	VR3	R	**414502**
		1 315	6	10,5	6,5	d_1 + 5	d_1 + 20	8 ± 1,5	VR3	V	**414506**
1 420	**1 470**	1 315	14,3	25	15	d_1 + 10	d_1 + 45	20 ± 4	VR1	R	**414500**
1 440	**1 465**	1 374	32,5	65	30	d_1 + 24	d_1 + 115	50 ± 12	VR4	R	**414503**
		1 374	32,5	65	21	d_1 + 24	d_1 + 115	50 ± 12	VR6	R	**471451**
1 465	**1 490**	1 397	32,5	65	30	d_1 + 24	d_1 + 115	50 ± 12	VR4	R	**414753**
		1 397	32,5	65	21	d_1 + 24	d_1 + 115	50 ± 12	VR6	R	**471476**
1 475	**1 525**	1 360	6	10,5	6,5	d_1 + 5	d_1 + 20	8 ± 1,5	VR3	R	**415002**
		1 360	6	10,5	6,5	d_1 + 5	d_1 + 20	8 ± 1,5	VR3	V	**415006**
1 470	**1 520**	1 360	14,3	25	15	d_1 + 10	d_1 + 45	20 ± 4	VR1	R	**415000**
1 490	**1 515**	1 419	32,5	65	30	d_1 + 24	d_1 + 115	50 ± 12	VR4	R	**415003**
		1 419	32,5	65	21	d_1 + 24	d_1 + 115	50 ± 12	VR6	R	**471501**
1 515	**1 540**	1 443	32,5	65	30	d_1 + 24	d_1 + 115	50 ± 12	VR4	R	**415253**
		1 443	32,5	65	21	d_1 + 24	d_1 + 115	50 ± 12	VR6	R	**471526**

V-ring seals – metric dimensions, for North American market

d_1 **1 525 – 2 020** mm

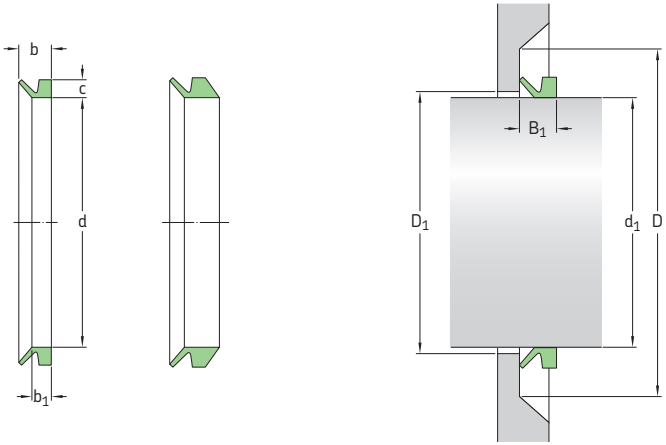

Dimensions									Design	Lip code	Designation
Shaft diameter range d_1 over	incl.	Seal inside diameter, free state d	Seal seat width b_1	Nominal seal width b	Nominal seal height c	Clearance D_1 max	Counterface D min	Seal fitted width B_1			
mm									–	–	–
1 525	**1 575**	1 405	6	10,5	6,5	d_1 + 5	d_1 + 20	8 ± 1,5	VR3	R	**415502**
		1 405	6	10,5	6,5	d_1 + 5	d_1 + 20	8 ± 1,5	VR3	V	**415506**
1 520	**1 570**	1 405	14,3	25	15	d_1 + 10	d_1 + 45	20 ± 4	VR1	R	**415500**
1 540	**1 570**	1 467	32,5	65	30	d_1 + 24	d_1 + 115	50 ± 12	VR4	R	**415503**
		1 467	32,5	65	21	d_1 + 24	d_1 + 115	50 ± 12	VR6	R	**471551**
1 570	**1 600**	1 495	32,5	65	30	d_1 + 24	d_1 + 115	50 ± 12	VR4	R	**415753**
		1 495	32,5	65	21	d_1 + 24	d_1 + 115	50 ± 12	VR6	R	**471576**
1 575	**1 625**	1 450	6	10,5	6,5	d_1 + 5	d_1 + 20	8 ± 1,5	VR3	R	**416002**
		1 450	6	10,5	6,5	d_1 + 5	d_1 + 20	8 ± 1,5	VR3	V	**416006**
1 570	**1 620**	1 450	14,3	25	15	d_1 + 10	d_1 + 45	20 ± 4	VR1	R	**416000**
1 600	**1 640**	1 524	32,5	65	30	d_1 + 24	d_1 + 115	50 ± 12	VR4	R	**416003**
		1 524	32,5	65	21	d_1 + 24	d_1 + 115	50 ± 12	VR6	R	**471601**
1 625	**1 675**	1 495	6	10,5	6,5	d_1 + 5	d_1 + 20	8 ± 1,5	VR3	R	**416502**
		1 495	6	10,5	6,5	d_1 + 5	d_1 + 20	8 ± 1,5	VR3	V	**416506**
1 620	**1 670**	1 495	14,3	25	15	d_1 + 10	d_1 + 45	20 ± 4	VR1	R	**416500**
1 640	**1 680**	1 559	32,5	65	30	d_1 + 24	d_1 + 115	50 ± 12	VR4	R	**416503**
		1 559	32,5	65	21	d_1 + 24	d_1 + 115	50 ± 12	VR6	R	**471651**
1 675	**1 725**	1 540	6	10,5	6,5	d_1 + 5	d_1 + 20	8 ± 1,5	VR3	R	**417002**
		1 540	6	10,5	6,5	d_1 + 5	d_1 + 20	8 ± 1,5	VR3	V	**417006**
1 670	**1 720**	1 540	14,3	25	15	d_1 + 10	d_1 + 45	20 ± 4	VR1	R	**417000**
1 680	**1 720**	1 596	32,5	65	30	d_1 + 24	d_1 + 115	50 ± 12	VR4	R	**417003**
		1 596	32,5	65	21	d_1 + 24	d_1 + 115	50 ± 12	VR6	R	**471701**
1 725	**1 775**	1 585	6	10,5	6,5	d_1 + 5	d_1 + 20	8 ± 1,5	VR3	R	**417502**
		1 585	6	10,5	6,5	d_1 + 5	d_1 + 20	8 ± 1,5	VR3	V	**417506**
1 720	**1 770**	1 585	14,3	25	15	d_1 + 10	d_1 + 45	20 ± 4	VR1	R	**417500**
1 720	**1 765**	1 632	32,5	65	30	d_1 + 24	d_1 + 115	50 ± 12	VR4	R	**417503**
		1 632	32,5	65	21	d_1 + 24	d_1 + 115	50 ± 12	VR6	R	**471751**

Dimensions									Design	Lip code	Designation
Shaft diameter range		Seal inside diameter, free state	Seal seat width	Nominal seal width	Nominal seal height	Clearance	Counterface	Seal fitted width			
d_1 over	incl.	d	b_1	b	c	D_1 max	D min	B_1			
mm									–	–	–
1 765	**1 810**	1 671	32,5	65	30	$d_1 + 24$	$d_1 + 115$	50 ± 12	VR4	R	**418003**
		1 671	32,5	65	21	$d_1 + 24$	$d_1 + 115$	50 ± 12	VR6	R	**471801**
1 775	**1 825**	1 630	6	10,5	6,5	$d_1 + 5$	$d_1 + 20$	8 ± 1,5	VR3	R	**418002**
		1 630	6	10,5	6,5	$d_1 + 5$	$d_1 + 20$	8 ± 1,5	VR3	V	**418006**
1 770	**1 820**	1 630	14,3	25	15	$d_1 + 10$	$d_1 + 45$	20 ± 4	VR1	R	**418000**
1 810	**1 855**	1 714	32,5	65	30	$d_1 + 24$	$d_1 + 115$	50 ± 12	VR4	R	**418503**
		1 714	32,5	65	21	$d_1 + 24$	$d_1 + 115$	50 ± 12	VR6	R	**471851**
1 825	**1 875**	1 675	6	10,5	6,5	$d_1 + 5$	$d_1 + 20$	8 ± 1,5	VR3	R	**418502**
		1 675	6	10,5	6,5	$d_1 + 5$	$d_1 + 20$	8 ± 1,5	VR3	V	**418506**
1 820	**1 870**	1 675	14,3	25	15	$d_1 + 10$	$d_1 + 45$	20 ± 4	VR1	R	**418500**
1 855	**1 905**	1 753	32,5	65	30	$d_1 + 24$	$d_1 + 115$	50 ± 12	VR4	R	**419003**
		1 753	32,5	65	21	$d_1 + 24$	$d_1 + 115$	50 ± 12	VR6	R	**471901**
1 875	**1 925**	1 720	6	10,5	6,5	$d_1 + 5$	$d_1 + 20$	8 ± 1,5	VR3	R	**419002**
		1 720	6	10,5	6,5	$d_1 + 5$	$d_1 + 20$	8 ± 1,5	VR3	V	**419006**
1 870	**1 920**	1 720	14,3	25	15	$d_1 + 10$	$d_1 + 45$	20 ± 4	VR1	R	**419000**
1 905	**1 955**	1 794	32,5	65	30	$d_1 + 24$	$d_1 + 115$	50 ± 12	VR4	R	**419503**
		1 794	32,5	65	21	$d_1 + 24$	$d_1 + 115$	50 ± 12	VR6	R	**471951**
1 925	**1 975**	1 765	6	10,5	6,5	$d_1 + 5$	$d_1 + 20$	8 ± 1,5	VR3	R	**419502**
		1 765	6	10,5	6,5	$d_1 + 5$	$d_1 + 20$	8 ± 1,5	VR3	V	**419506**
1 920	**1 970**	1 765	14,3	25	15	$d_1 + 10$	$d_1 + 45$	20 ± 4	VR1	R	**419500**
1 955	**2 010**	1 844	32,5	65	30	$d_1 + 24$	$d_1 + 115$	50 ± 12	VR4	R	**420003**
		1 844	32,5	65	21	$d_1 + 24$	$d_1 + 115$	50 ± 12	VR6	R	**472001**
1 975	**2 025**	1 810	6	10,5	6,5	$d_1 + 5$	$d_1 + 20$	8 ± 1,5	VR3	R	**420002**
		1 810	6	10,5	6,5	$d_1 + 5$	$d_1 + 20$	8 ± 1,5	VR3	V	**420006**
1 970	**2 020**	1 810	14,3	25	15	$d_1 + 10$	$d_1 + 45$	20 ± 4	VR1	R	**420000**

V-ring seals – inch dimensions, for North American market

d_1 **0.11 – 2.09** in.

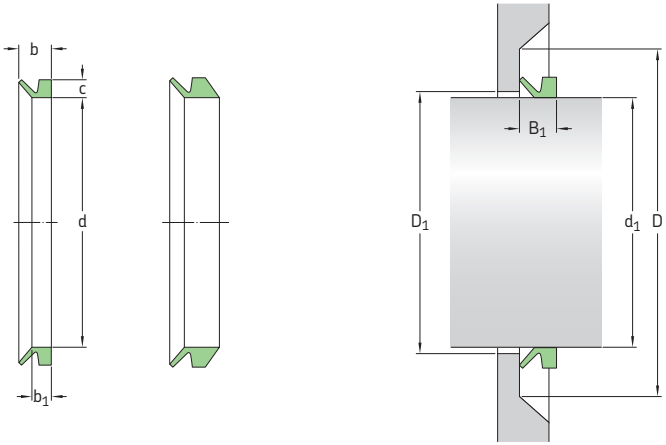

Dimensions Shaft diameter range d_1 over	incl.	Seal inside diameter, free state d	Nominal seal height c	Seal seat width b_1	Nominal seal width b	Clearance D_1 (=d_1+) max	Counterface D (=d_1 +) min	Seal fitted width B_1	Design	Lip code	Designation
in.		in.							–	–	–
0.11	**0.14**	0.10	0.06	0.08	0.12	0.04	0.16	0.10 ± 0.012	VR1	R	**400030**
		0.10	0.06	0.08	0.12	0.04	0.16	0.10 ± 0.012	VR1	V	**400034**
0.14	**0.18**	0.13	0.08	0.09	0.15	0.04	0.24	0.12 ± 0.016	VR1	R	**400040**
		0.13	0.08	0.09	0.15	0.04	0.24	0.12 ± 0.016	VR1	V	**400044**
0.18	**0.22**	0.16	0.08	0.09	0.15	0.04	0.24	0.12 ± 0.016	VR1	R	**400050**
		0.16	0.08	0.09	0.15	0.04	0.24	0.12 ± 0.016	VR1	V	**400054**
		0.16	0.08	0.15	0.20	0.04	0.24	0.18 ± 0.016	VR2	R	**400051**
		0.16	0.08	0.15	0.20	0.04	0.24	0.18 ± 0.016	VR2	V	**400055**
0.22	**0.26**	0.20	0.08	0.09	0.15	0.04	0.24	0.12 ± 0.016	VR1	R	**400060**
		0.20	0.08	0.09	0.15	0.04	0.24	0.12 ± 0.016	VR1	V	**400064**
		0.20	0.08	0.15	0.20	0.04	0.24	0.18 ± 0.016	VR2	R	**400061**
		0.20	0.08	0.15	0.20	0.04	0.24	0.18 ± 0.016	VR2	V	**400065**
0.26	**0.31**	0.24	0.08	0.09	0.15	0.04	0.24	0.12 ± 0.016	VR1	R	**400070**
		0.24	0.08	0.09	0.15	0.04	0.24	0.12 ± 0.016	VR1	V	**400074**
		0.24	0.08	0.15	0.20	0.04	0.24	0.18 ± 0.016	VR2	R	**400071**
		0.24	0.08	0.15	0.20	0.04	0.24	0.18 ± 0.016	VR2	V	**400075**
0.31	**0.37**	0.28	0.08	0.09	0.15	0.04	0.24	0.12 ± 0.016	VR1	R	**400080**
		0.28	0.08	0.09	0.15	0.04	0.24	0.12 ± 0.016	VR1	V	**400084**
		0.28	0.08	0.15	0.20	0.04	0.24	0.18 ± 0.016	VR2	R	**400081**
		0.28	0.08	0.15	0.20	0.04	0.24	0.18 ± 0.016	VR2	V	**400085**
0.37	**0.45**	0.35	0.12	0.13	0.22	0.04	0.35	0.18 ± 0.02	VR1	R	**400100**
		0.35	0.12	0.13	0.22	0.04	0.35	0.18 ± 0.02	VR1	V	**400104**
		0.35	0.12	0.22	0.30	0.04	0.35	0.26 ± 0.02	VR2	R	**400101**
		0.35	0.12	0.22	0.30	0.04	0.35	0.26 ± 0.02	VR2	V	**400105**
0.45	**0.49**	0.41	0.12	0.13	0.22	0.04	0.35	0.18 ± 0.02	VR1	R	**400120**
		0.41	0.12	0.13	0.22	0.04	0.35	0.18 ± 0.02	VR1	V	**400124**
		0.41	0.12	0.22	0.30	0.04	0.35	0.26 ± 0.02	VR2	R	**400121**
		0.41	0.12	0.22	0.30	0.04	0.35	0.26 ± 0.02	VR2	V	**400125**
0.49	**0.53**	0.46	0.12	0.13	0.22	0.04	0.35	0.18 ± 0.02	VR1	R	**400130**
		0.46	0.12	0.13	0.22	0.04	0.35	0.18 ± 0.02	VR1	V	**400134**
0.53	**0.61**	0.49	0.12	0.13	0.22	0.04	0.35	0.18 ± 0.02	VR1	R	**400140**
		0.49	0.12	0.13	0.22	0.04	0.35	0.18 ± 0.02	VR1	V	**400144**

Dimensions									Design	Lip code	Design-nation
Shaft diameter range d_1 over	incl.	Seal inside diameter, free state d	Nominal seal height c	Seal seat width b_1	Nominal seal width b	Clearance $D_1 (=d_1+)$ max	Counterface $D (=d_1+)$ min	Seal fitted width B_1			
in.		in.							–	–	–
0.53	**0.61**	0.49	0.12	0.22	0.30	0.04	0.35	0.26 ± 0.02	VR2	R	**400141**
cont.		0.49	0.12	0.22	0.30	0.04	0.35	0.26 ± 0.02	VR2	V	**400145**
0.61	**0.67**	0.55	0.12	0.13	0.22	0.04	0.35	0.18 ± 0.02	VR1	R	**400160**
		0.55	0.12	0.13	0.22	0.04	0.35	0.18 ± 0.02	VR1	V	**400164**
0.61	**0.69**	0.55	0.12	0.22	0.30	0.04	0.35	0.26 ± 0.02	VR2	R	**400161**
		0.55	0.12	0.22	0.30	0.04	0.35	0.26 ± 0.02	VR2	V	**400165**
0.69	**0.75**	0.63	0.12	0.13	0.22	0.04	0.35	0.18 ± 0.02	VR1	R	**400180**
		0.63	0.12	0.13	0.22	0.04	0.35	0.18 ± 0.02	VR1	V	**400184**
		0.63	0.12	0.22	0.30	0.04	0.35	0.26 ± 0.02	VR2	R	**400181**
		0.63	0.12	0.22	0.30	0.04	0.35	0.26 ± 0.02	VR2	V	**400185**
0.75	**0.83**	0.71	0.16	0.19	0.30	0.08	0.47	0.24 ± 0.03	VR1	R	**400200**
		0.71	0.16	0.19	0.30	0.08	0.47	0.24 ± 0.03	VR1	V	**400204**
		0.71	0.16	0.31	0.41	0.08	0.47	0.35 ± 0.03	VR2	R	**400201**
		0.71	0.16	0.31	0.41	0.08	0.47	0.35 ± 0.03	VR2	V	**400205**
0.83	**0.94**	0.79	0.16	0.19	0.30	0.08	0.47	0.24 ± 0.03	VR1	R	**400220**
		0.79	0.16	0.19	0.30	0.08	0.47	0.24 ± 0.03	VR1	V	**400224**
		0.79	0.16	0.31	0.41	0.08	0.47	0.35 ± 0.03	VR2	R	**400221**
		0.79	0.16	0.31	0.41	0.08	0.47	0.35 ± 0.03	VR2	V	**400225**
0.94	**1.06**	0.87	0.16	0.19	0.30	0.08	0.47	0.24 ± 0.03	VR1	R	**400250**
		0.87	0.16	0.19	0.30	0.08	0.47	0.24 ± 0.03	VR1	V	**400254**
		0.87	0.16	0.31	0.41	0.08	0.47	0.35 ± 0.03	VR2	R	**400251**
		0.87	0.16	0.31	0.41	0.08	0.47	0.35 ± 0.03	VR2	V	**400255**
1.06	**1.14**	0.98	0.16	0.19	0.30	0.08	0.47	0.24 ± 0.03	VR1	R	**400280**
		0.98	0.16	0.19	0.30	0.08	0.47	0.24 ± 0.03	VR1	V	**400284**
		0.98	0.16	0.31	0.41	0.08	0.47	0.35 ± 0.03	VR2	R	**400281**
		0.98	0.16	0.31	0.41	0.08	0.47	0.35 ± 0.03	VR2	V	**400285**
1.14	**1.22**	1.06	0.16	0.19	0.30	0.08	0.47	0.24 ± 0.03	VR1	R	**400300**
		1.06	0.16	0.19	0.30	0.08	0.47	0.24 ± 0.03	VR1	V	**400304**
		1.06	0.16	0.31	0.41	0.08	0.47	0.35 ± 0.03	VR2	R	**400301**
		1.06	0.16	0.31	0.41	0.08	0.47	0.35 ± 0.03	VR2	V	**400305**
1.22	**1.30**	1.14	0.16	0.19	0.30	0.08	0.47	0.24 ± 0.03	VR1	R	**400320**
		1.14	0.16	0.19	0.30	0.08	0.47	0.24 ± 0.03	VR1	V	**400324**
		1.14	0.16	0.31	0.41	0.08	0.47	0.35 ± 0.03	VR2	R	**400321**
		1.14	0.16	0.31	0.41	0.08	0.47	0.35 ± 0.03	VR2	V	**400325**
1.30	**1.42**	1.22	0.16	0.19	0.30	0.08	0.47	0.24 ± 0.03	VR1	R	**400350**
		1.22	0.16	0.19	0.30	0.08	0.47	0.24 ± 0.03	VR1	V	**400354**
		1.22	0.16	0.31	0.41	0.08	0.47	0.35 ± 0.03	VR2	R	**400351**
		1.22	0.16	0.31	0.41	0.08	0.47	0.35 ± 0.03	VR2	V	**400355**
1.42	**1.50**	1.34	0.16	0.19	0.30	0.08	0.47	0.24 ± 0.03	VR1	R	**400380**
		1.34	0.16	0.19	0.30	0.08	0.47	0.24 ± 0.03	VR1	V	**400384**
		1.34	0.16	0.31	0.41	0.08	0.47	0.35 ± 0.03	VR2	R	**400381**
		1.34	0.16	0.31	0.41	0.08	0.47	0.35 ± 0.03	VR2	V	**400385**
1.50	**1.69**	1.42	0.20	0.22	0.35	0.08	0.59	0.28 ± 0.04	VR1	R	**400400**
		1.42	0.20	0.22	0.35	0.08	0.59	0.28 ± 0.04	VR1	V	**400404**
		1.42	0.20	0.37	0.51	0.08	0.59	0.43 ± 0.04	VR2	R	**400401**
		1.42	0.20	0.37	0.51	0.08	0.59	0.43 ± 0.04	VR2	V	**400405**
1.69	**1.89**	1.57	0.20	0.22	0.35	0.08	0.59	0.28 ± 0.04	VR1	R	**400450**
		1.57	0.20	0.22	0.35	0.08	0.59	0.28 ± 0.04	VR1	V	**400454**
		1.57	0.20	0.37	0.51	0.08	0.59	0.43 ± 0.04	VR2	R	**400451**
		1.57	0.20	0.37	0.51	0.08	0.59	0.43 ± 0.04	VR2	V	**400455**
1.89	**2.09**	1.77	0.20	0.22	0.35	0.08	0.59	0.28 ± 0.04	VR1	R	**400500**
		1.77	0.20	0.22	0.35	0.08	0.59	0.28 ± 0.04	VR1	V	**400504**
		1.77	0.20	0.37	0.51	0.08	0.59	0.43 ± 0.04	VR2	R	**400501**
		1.77	0.20	0.37	0.51	0.08	0.59	0.43 ± 0.04	VR2	V	**400505**

V-ring seals – inch dimensions, for North American market

d_1 **2.09 – 7.68** in.

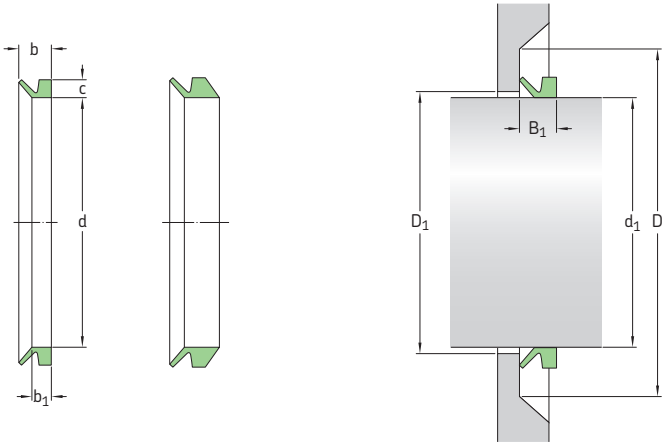

Dimensions									Design	Lip code	Designation
Shaft diameter range d_1 over	incl.	Seal inside diameter, free state d	Nominal seal height c	Seal seat width b_1	Nominal seal width b	Clearance D_1 (= d_1+) max	Counterface D (= d_1 +) min	Seal fitted width B_1			
in.		in.							–	–	–
2.09	**2.28**	1.93	0.20	0.22	0.35	0.08	0.59	0.28 ± 0.04	VR1	R	**400550**
		1.93	0.20	0.22	0.35	0.08	0.59	0.28 ± 0.04	VR1	V	**400554**
		1.93	0.20	0.37	0.51	0.08	0.59	0.43 ± 0.04	VR2	R	**400551**
		1.93	0.20	0.37	0.51	0.08	0.59	0.43 ± 0.04	VR2	V	**400555**
2.28	**2.48**	2.13	0.20	0.22	0.35	0.08	0.59	0.28 ± 0.04	VR1	R	**400600**
		2.13	0.20	0.22	0.35	0.08	0.59	0.28 ± 0.04	VR1	V	**400604**
		2.13	0.20	0.37	0.51	0.08	0.59	0.43 ± 0.04	VR2	R	**400601**
		2.13	0.20	0.37	0.51	0.08	0.59	0.43 ± 0.04	VR2	V	**400605**
2.48	**2.68**	2.28	0.20	0.22	0.35	0.08	0.59	0.28 ± 0.04	VR1	R	**400650**
		2.28	0.20	0.22	0.35	0.08	0.59	0.28 ± 0.04	VR1	V	**400654**
		2.28	0.20	0.37	0.51	0.08	0.59	0.43 ± 0.04	VR2	R	**400651**
		2.28	0.20	0.37	0.51	0.08	0.59	0.43 ± 0.04	VR2	V	**400655**
2.68	**2.87**	2.48	0.24	0.27	0.43	0.12	0.71	0.35 ± 0.05	VR1	R	**400700**
		2.48	0.24	0.27	0.43	0.12	0.71	0.35 ± 0.05	VR1	V	**400704**
		2.48	0.24	0.44	0.61	0.12	0.71	0.53 ± 0.05	VR2	R	**400701**
		2.48	0.24	0.44	0.61	0.12	0.71	0.53 ± 0.05	VR2	V	**400705**
2.87	**3.07**	2.64	0.24	0.27	0.43	0.12	0.71	0.35 ± 0.05	VR1	R	**400750**
		2.64	0.24	0.27	0.43	0.12	0.71	0.53 ± 0.05	VR2	R	**400751**
		2.64	0.24	0.44	0.61	0.12	0.71	0.53 ± 0.05	VR2	V	**400755**
3.07	**3.27**	2.83	0.24	0.27	0.43	0.12	0.71	0.35 ± 0.05	VR1	R	**400800**
		2.83	0.24	0.27	0.43	0.12	0.71	0.35 ± 0.05	VR1	V	**400804**
		2.83	0.24	0.44	0.61	0.12	0.71	0.53 ± 0.05	VR2	R	**400801**
		2.83	0.24	0.44	0.61	0.12	0.71	0.53 ± 0.05	VR2	V	**400805**
3.27	**3.46**	2.99	0.24	0.27	0.43	0.12	0.71	0.35 ± 0.05	VR1	R	**400850**
		2.99	0.24	0.27	0.43	0.12	0.71	0.35 ± 0.05	VR1	V	**400854**
		2.99	0.24	0.44	0.61	0.12	0.71	0.53 ± 0.05	VR2	R	**400851**
		2.99	0.24	0.44	0.61	0.12	0.71	0.53 ± 0.05	VR2	V	**400855**
3.46	**3.66**	3.19	0.24	0.27	0.43	0.12	0.71	0.35 ± 0.05	VR1	R	**400900**
		3.19	0.24	0.27	0.43	0.12	0.71	0.35 ± 0.05	VR1	V	**400904**
		3.19	0.24	0.44	0.61	0.12	0.71	0.53 ± 0.05	VR2	R	**400901**
		3.19	0.24	0.44	0.61	0.12	0.71	0.53 ± 0.05	VR2	V	**400905**
3.66	**3.86**	3.35	0.24	0.27	0.43	0.12	0.71	0.35 ± 0.05	VR1	R	**400950**
		3.35	0.24	0.27	0.43	0.12	0.71	0.35 ± 0.05	VR1	V	**400954**
		3.35	0.24	0.44	0.61	0.12	0.71	0.53 ± 0.05	VR2	R	**400951**
		3.35	0.24	0.44	0.61	0.12	0.71	0.53 ± 0.05	VR2	V	**400955**

Dimensions									Design	Lip code	Design-nation
Shaft diameter range d_1 over	incl.	Seal inside diameter, free state d	Nominal seal height c	Seal seat width b_1	Nominal seal width b	Clearance D_1 (= d_1+) max	Counterface D (= d_1 +) min	Seal fitted width B_1			
in.		in.							–	–	–
3.86	**4.13**	3.54	0.24	0.27	0.43	0.12	0.71	0.35 ± 0.05	VR1	R	**401000**
		3.54	0.24	0.27	0.43	0.12	0.71	0.35 ± 0.05	VR1	V	**401004**
		3.54	0.24	0.44	0.61	0.12	0.71	0.53 ± 0.05	VR2	R	**401001**
		3.54	0.24	0.44	0.61	0.12	0.71	0.53 ± 0.05	VR2	V	**401005**
4.13	**4.53**	3.90	0.26	0.24	0.41	0.20	0.79	0.31 ± 0.06	VR3	R	**401102**
		3.90	0.26	0.24	0.41	0.20	0.79	0.31 ± 0.06	VR3	V	**401106**
		3.90	0.28	0.31	0.50	0.16	0.83	0.41 ± 0.06	VR1	R	**401100**
		3.90	0.28	0.31	0.50	0.16	0.83	0.41 ± 0.06	VR1	V	**401104**
		3.90	0.28	0.52	0.71	0.16	0.83	0.61 ± 0.06	VR2	R	**401101**
		3.90	0.28	0.52	0.71	0.16	0.83	0.61 ± 0.06	VR2	V	**401105**
4.53	**4.92**	4.25	0.26	0.24	0.41	0.20	0.79	0.31 ± 0.06	VR3	R	**401202**
		4.25	0.26	0.24	0.41	0.20	0.79	0.31 ± 0.06	VR3	V	**401206**
		4.25	0.28	0.31	0.50	0.16	0.83	0.41 ± 0.06	VR1	R	**401200**
		4.25	0.28	0.31	0.50	0.16	0.83	0.41 ± 0.06	VR1	V	**401204**
		4.25	0.28	0.52	0.71	0.16	0.83	0.61 ± 0.06	VR2	R	**401201**
		4.25	0.28	0.52	0.71	0.16	0.83	0.61 ± 0.06	VR2	V	**401205**
4.92	**5.31**	4.61	0.26	0.24	0.41	0.20	0.79	0.31 ± 0.06	VR3	R	**401302**
		4.61	0.26	0.24	0.41	0.20	0.79	0.31 ± 0.06	VR3	V	**401306**
		4.61	0.28	0.31	0.50	0.16	0.83	0.41 ± 0.06	VR1	R	**401300**
		4.61	0.28	0.31	0.50	0.16	0.83	0.41 ± 0.06	VR1	V	**401304**
		4.61	0.28	0.52	0.71	0.16	0.83	0.61 ± 0.06	VR2	R	**401301**
		4.61	0.28	0.52	0.71	0.16	0.83	0.61 ± 0.06	VR2	V	**401305**
5.31	**5.71**	4.96	0.26	0.24	0.41	0.20	0.79	0.31 ± 0.06	VR3	R	**401402**
		4.96	0.26	0.24	0.41	0.20	0.79	0.31 ± 0.06	VR3	V	**401406**
		4.96	0.28	0.31	0.50	0.16	0.83	0.41 ± 0.06	VR1	R	**401400**
		4.96	0.28	0.31	0.50	0.16	0.83	0.41 ± 0.06	VR1	V	**401404**
		4.96	0.28	0.52	0.71	0.16	0.83	0.61 ± 0.06	VR2	R	**401401**
		4.96	0.28	0.52	0.71	0.16	0.83	0.61 ± 0.06	VR2	V	**401405**
5.71	**6.10**	5.31	0.26	0.24	0.41	0.20	0.79	0.31 ± 0.06	VR3	R	**401502**
		5.31	0.26	0.24	0.41	0.20	0.79	0.31 ± 0.06	VR3	V	**401506**
		5.31	0.28	0.31	0.50	0.16	0.83	0.41 ± 0.06	VR1	R	**401500**
		5.31	0.28	0.31	0.50	0.16	0.83	0.41 ± 0.06	VR1	V	**401504**
		5.31	0.28	0.52	0.71	0.16	0.83	0.61 ± 0.06	VR2	R	**401501**
		5.31	0.28	0.52	0.71	0.16	0.83	0.61 ± 0.06	VR2	V	**401505**
6.10	**6.50**	5.67	0.26	0.24	0.41	0.20	0.79	0.31 ± 0.06	VR3	R	**401602**
		5.67	0.26	0.24	0.41	0.20	0.79	0.31 ± 0.06	VR3	V	**401606**
		5.67	0.31	0.35	0.57	0.16	0.94	0.47 ± 0.07	VR1	R	**401600**
		5.67	0.31	0.35	0.57	0.16	0.94	0.47 ± 0.07	VR1	V	**401604**
		5.67	0.31	0.59	0.81	0.16	0.94	0.71 ± 0.07	VR2	R	**401601**
		5.67	0.31	0.59	0.81	0.16	0.94	0.71 ± 0.07	VR2	V	**401605**
6.50	**6.89**	6.02	0.26	0.24	0.41	0.20	0.79	0.31 ± 0.06	VR3	R	**401702**
		6.02	0.26	0.24	0.41	0.20	0.79	0.31 ± 0.06	VR3	V	**401706**
		6.02	0.31	0.35	0.57	0.16	0.94	0.47 ± 0.07	VR1	R	**401700**
		6.02	0.31	0.35	0.57	0.16	0.94	0.47 ± 0.07	VR1	V	**401704**
		6.02	0.31	0.59	0.81	0.16	0.94	0.71 ± 0.07	VR2	R	**401701**
		6.02	0.31	0.59	0.81	0.16	0.94	0.71 ± 0.07	VR2	V	**401705**
6.89	**7.28**	6.38	0.26	0.24	0.41	0.20	0.79	0.31 ± 0.06	VR3	R	**401802**
		6.38	0.26	0.24	0.41	0.20	0.79	0.31 ± 0.06	VR3	V	**401806**
		6.38	0.31	0.35	0.57	0.16	0.94	0.47 ± 0.07	VR1	R	**401800**
		6.38	0.31	0.35	0.57	0.16	0.94	0.47 ± 0.07	VR1	V	**401804**
		6.38	0.31	0.59	0.81	0.16	0.94	0.71 ± 0.07	VR2	R	**401801**
		6.38	0.31	0.59	0.81	0.16	0.94	0.71 ± 0.07	VR2	V	**401805**
7.28	**7.68**	6.73	0.26	0.24	0.41	0.20	0.79	0.31 ± 0.06	VR3	R	**401902**
		6.73	0.26	0.24	0.41	0.20	0.79	0.31 ± 0.06	VR3	V	**401906**
		6.73	0.31	0.35	0.57	0.16	0.94	0.47 ± 0.07	VR1	R	**401900**
		6.73	0.31	0.35	0.57	0.16	0.94	0.47 ± 0.07	VR1	V	**401904**
		6.73	0.31	0.59	0.81	0.16	0.94	0.71 ± 0.07	VR2	R	**401901**
		6.73	0.31	0.59	0.81	0.16	0.94	0.71 ± 0.07	VR2	V	**401905**

V-ring seals – inch dimensions, for North American market
d_1 **7.48 – 15.35** in.

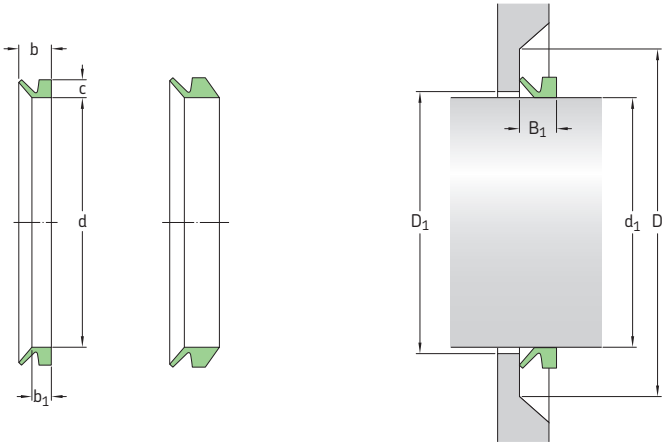

Dimensions Shaft diameter range d_1 over	incl.	Seal inside diameter, free state d	Nominal seal height c	Seal seat width b_1	Nominal seal width b	Clearance D_1 (= d_1+) max	Counterface D (= d_1 +) min	Seal fitted width B_1	Design	Lip code	Designation
in.		in.							–	–	–
7.68	**8.27**	7.17	0.26	0.24	0.41	0.20	0.79	0.31 ± 0.06	VR3	R	**402002**
		7.17	0.26	0.24	0.41	0.20	0.79	0.31 ± 0.06	VR3	V	**402006**
		7.09	0.31	0.35	0.57	0.16	0.94	0.47 ± 0.07	VR1	R	**401990**
		7.09	0.31	0.35	0.57	0.16	0.94	0.47 ± 0.07	VR1	V	**401994**
		7.09	0.31	0.59	0.81	0.16	0.94	0.71 ± 0.07	VR2	R	**401991**
		7.09	0.31	0.59	0.81	0.16	0.94	0.71 ± 0.07	VR2	V	**401995**
7.48	**8.27**	7.09	0.59	0.56	0.98	0.39	1.77	0.79 ± 0.16	VR1	R	**402000**
		7.09	0.59	0.56	0.98	0.39	1.77	0.79 ± 0.16	VR1	V	**402004**
8.27	**9.17**	7.80	0.26	0.24	0.41	0.20	0.79	0.31 ± 0.06	VR3	R	**402202**
		7.80	0.26	0.24	0.41	0.20	0.79	0.31 ± 0.06	VR3	V	**402206**
		7.80	0.59	0.56	0.98	0.39	1.77	0.79 ± 0.16	VR1	R	**402200**
		7.80	0.59	0.56	0.98	0.39	1.77	0.79 ± 0.16	VR1	V	**402204**
9.17	**10.24**	8.86	0.26	0.24	0.41	0.20	0.79	0.31 ± 0.06	VR3	R	**402502**
		8.86	0.26	0.24	0.41	0.20	0.79	0.31 ± 0.06	VR3	V	**402506**
9.25	**10.43**	8.86	0.59	0.56	0.98	0.39	1.77	0.79 ± 0.16	VR1	R	**402500**
		8.86	0.59	0.56	0.98	0.39	1.77	0.79 ± 0.16	VR1	V	**402504**
10.24	**11.22**	9.72	0.26	0.24	0.41	0.20	0.79	0.31 ± 0.06	VR3	R	**402752**
		9.72	0.26	0.24	0.41	0.20	0.79	0.31 ± 0.06	VR3	V	**402756**
10.43	**11.42**	9.72	0.59	0.56	0.98	0.39	1.77	0.79 ± 0.16	VR1	R	**402750**
		9.72	0.59	0.56	0.98	0.39	1.77	0.79 ± 0.16	VR1	V	**402754**
11.22	**12.20**	10.63	0.26	0.24	0.41	0.20	0.79	0.31 ± 0.06	VR3	R	**403002**
		10.63	0.26	0.24	0.41	0.20	0.79	0.31 ± 0.06	VR3	V	**403006**
11.42	**12.20**	10.63	0.59	0.56	0.98	0.39	1.77	0.79 ± 0.16	VR1	R	**403000**
		10.63	0.59	0.56	0.98	0.39	1.77	0.79 ± 0.16	VR1	V	**403004**
11.81	**12.01**	11.57	1.18	1.28	2.56	0.94	4.53	1.97 ± 0.47	VR4	R	**403003**
		11.57	0.83	1.28	2.56	0.94	4.53	1.97 ± 0.47	VR6	R	**470301**
12.01	**12.20**	11.77	1.18	1.28	2.56	0.94	4.53	1.97 ± 0.47	VR4	R	**403053**
		11.77	0.83	1.28	2.56	0.94	4.53	1.97 ± 0.47	VR6	R	**470306**
12.20	**13.19**	11.50	0.26	0.24	0.41	0.20	0.79	0.31 ± 0.06	VR3	R	**403252**
		11.50	0.26	0.24	0.41	0.20	0.79	0.31 ± 0.06	VR3	V	**403256**

Dimensions									Design	Lip code	Design-nation
Shaft diameter range d_1 over	incl.	Seal inside diameter, free state d	Nominal seal height c	Seal seat width b_1	Nominal seal width b	Clearance $D_1 (= d_1 +)$ max	Counterface $D (= d_1 +)$ min	Seal fitted width B_1			
in.		in.							–	–	–
12.20 cont.	**13.19**	11.50 11.50	0.59 0.59	0.56 0.56	0.98 0.98	0.39 0.39	1.77 1.77	0.79 ± 0.16 0.79 ± 0.16	VR1 VR1	R V	**403250** **403254**
12.20	**12.40**	11.97 11.97	1.18 0.83	1.28 1.28	2.56 2.56	0.94 0.94	4.53 4.53	1.97 ± 0.47 1.97 ± 0.47	VR4 VR6	R R	**403103** **470311**
12.40	**12.60**	12.17 12.17	1.18 0.83	1.28 1.28	2.56 2.56	0.94 0.94	4.53 4.53	1.97 ± 0.47 1.97 ± 0.47	VR4 VR6	R R	**403153** **470316**
12.60	**12.80**	12.36 12.36	1.18 0.83	1.28 1.28	2.56 2.56	0.94 0.94	4.53 4.53	1.97 ± 0.47 1.97 ± 0.47	VR4 VR6	R R	**403203** **470321**
12.80	**12.99**	12.56 12.56	1.18 0.83	1.28 1.28	2.56 2.56	0.94 0.94	4.53 4.53	1.97 ± 0.47 1.97 ± 0.47	VR4 VR6	R R	**403253** **470326**
12.99	**13.19**	12.72 12.72	1.18 0.83	1.28 1.28	2.56 2.56	0.94 0.94	4.53 4.53	1.97 ± 0.47 1.97 ± 0.47	VR4 VR6	R R	**403303** **470331**
13.19	**14.37**	12.40 12.40 12.40 12.40	0.26 0.26 0.59 0.59	0.24 0.24 0.56 0.56	0.41 0.41 0.98 0.98	0.20 0.20 0.39 0.39	0.79 0.79 1.77 1.77	0.31 ± 0.06 0.31 ± 0.06 0.79 ± 0.16 0.79 ± 0.16	VR3 VR3 VR1 VR1	R V R V	**403502** **403506** **403500** **403504**
13.19	**13.39**	12.91 12.91	1.18 0.83	1.28 1.28	2.56 2.56	0.94 0.94	4.53 4.53	1.97 ± 0.47 1.97 ± 0.47	VR4 VR6	R R	**403353** **470336**
13.39	**13.58**	13.11 12.91	1.18 0.83	1.28 1.28	2.56 2.56	0.94 0.94	4.53 4.53	1.97 ± 0.47 1.97 ± 0.47	VR4 VR6	R R	**403403** **470341**
13.58	**13.78**	13.31 13.31	1.18 0.83	1.28 1.28	2.56 2.56	0.94 0.94	4.53 4.53	1.97 ± 0.47 1.97 ± 0.47	VR4 VR6	R R	**403453** **470346**
13.78	**13.98**	13.50 13.50	1.18 0.83	1.28 1.28	2.56 2.56	0.94 0.94	4.53 4.53	1.97 ± 0.47 1.97 ± 0.47	VR4 VR6	R R	**403503** **470351**
13.98	**14.17**	13.66 13.66	1.18 0.83	1.28 1.28	2.56 2.56	0.94 0.94	4.53 4.53	1.97 ± 0.47 1.97 ± 0.47	VR4 VR6	R R	**403553** **470356**
14.17	**14.37**	13.86 14.06	1.18 0.83	1.28 1.28	2.56 2.56	0.94 0.94	4.53 4.53	1.97 ± 0.47 1.97 ± 0.47	VR4 VR6	R R	**403603** **470361**
14.37	**15.16**	13.27 13.27	0.26 0.26	0.24 0.24	0.41 0.41	0.20 0.20	0.79 0.79	0.31 ± 0.06 0.31 ± 0.06	VR3 VR3	R V	**403752** **403756**
14.37	**15.35**	13.27 13.27	0.59 0.59	0.56 0.56	0.98 0.98	0.39 0.39	1.77 1.77	0.79 ± 0.16 0.79 ± 0.16	VR1 VR1	R V	**403750** **403754**
14.37	**14.57**	14.06	1.18	1.28	2.56	0.94	4.53	1.97 ± 0.47	VR4	R	**403653**
14.57	**14.76**	14.25 14.25	1.18 0.83	1.28 1.28	2.56 2.56	0.94 0.94	4.53 4.53	1.97 ± 0.47 1.97 ± 0.47	VR4 VR6	R R	**403703** **470371**
14.76	**14.96**	14.45 14.45	1.18 0.83	1.28 1.28	2.56 2.56	0.94 0.94	4.53 4.53	1.97 ± 0.47 1.97 ± 0.47	VR4 VR6	R R	**403753** **470376**
14.96	**15.16**	14.61 14.61	1.18 0.83	1.28 1.28	2.56 2.56	0.94 0.94	4.53 4.53	1.97 ± 0.47 1.97 ± 0.47	VR4 VR6	R R	**403803** **470381**
15.16	**16.14**	14.17 14.17	0.26 0.26	0.24 0.24	0.41 0.41	0.20 0.20	0.79 0.79	0.31 ± 0.06 0.31 ± 0.06	VR3 VR3	R V	**404002** **404006**
15.35	**16.93**	14.17 14.17	0.59 0.59	0.56 0.56	0.98 0.98	0.39 0.39	1.77 1.77	0.79 ± 0.16 0.79 ± 0.16	VR1 VR1	R V	**404000** **404004**
15.16	**15.35**	14.80 14.80	1.18 0.83	1.28 1.28	2.56 2.56	0.94 0.94	4.53 4.53	1.97 ± 0.47 1.97 ± 0.47	VR4 VR6	R R	**403853** **470386**

V-ring seals – inch dimensions, for North American market
d_1 **15.35 – 22.64** in.

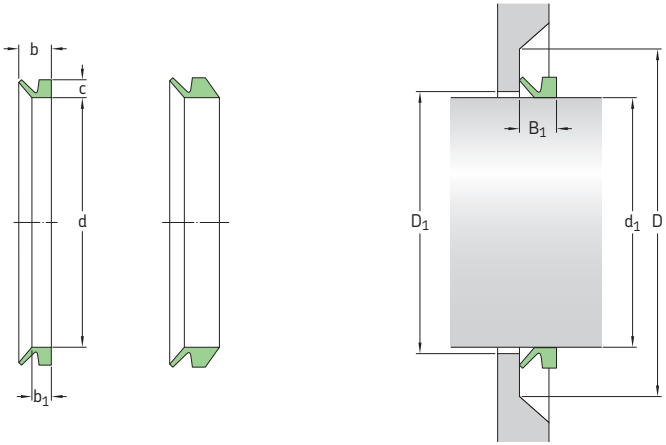

Dimensions Shaft diameter range d_1 over	incl.	Seal inside diameter, free state d	Nominal seal height c	Seal seat width b_1	Nominal seal width b	Clearance D_1 (= d_1+) max	Counterface D (= d_1 +) min	Seal fitted width B_1	Design	Lip code	Designation
in.		in.							–	–	–
15.35	**15.55**	15.00	1.18	1.28	2.56	0.94	4.53	1.97 ± 0.47	VR4	R	**403903**
		15.00	0.83	1.28	2.56	0.94	4.53	1.97 ± 0.47	VR6	R	**470391**
15.55	**15.75**	15.20	1.18	1.28	2.56	0.94	4.53	1.97 ± 0.47	VR4	R	**403953**
		15.20	0.83	1.28	2.56	0.94	4.53	1.97 ± 0.47	VR6	R	**470396**
15.75	**15.94**	15.39	1.18	1.28	2.56	0.94	4.53	1.97 ± 0.47	VR4	R	**404003**
		15.39	0.83	1.28	2.56	0.94	4.53	1.97 ± 0.47	VR6	R	**470401**
15.94	**16.14**	15.59	1.18	1.28	2.56	0.94	4.53	1.97 ± 0.47	VR4	R	**404053**
		15.59	0.83	1.28	2.56	0.94	4.53	1.97 ± 0.47	VR6	R	**470406**
16.14	**16.34**	15.79	1.18	1.28	2.56	0.94	4.53	1.97 ± 0.47	VR4	R	**404103**
		15.79	0.83	1.28	2.56	0.94	4.53	1.97 ± 0.47	VR6	R	**470411**
16.34	**16.54**	15.94	1.18	1.28	2.56	0.94	4.53	1.97 ± 0.47	VR4	R	**404153**
		15.94	0.83	1.28	2.56	0.94	4.53	1.97 ± 0.47	VR6	R	**470416**
16.54	**16.73**	16.14	1.18	1.28	2.56	0.94	4.53	1.97 ± 0.47	VR4	R	**404203**
		16.14	0.83	1.28	2.56	0.94	4.53	1.97 ± 0.47	VR6	R	**470421**
16.73	**16.93**	16.34	1.18	1.28	2.56	0.94	4.53	1.97 ± 0.47	VR4	R	**404253**
		16.34	0.83	1.28	2.56	0.94	4.53	1.97 ± 0.47	VR6	R	**470426**
16.14	**17.32**	15.04	0.26	0.24	0.41	0.20	0.79	0.31 ± 0.06	VR3	R	**404252**
		15.04	0.26	0.24	0.41	0.20	0.79	0.31 ± 0.06	VR3	V	**404256**
17.32	**18.70**	15.94	0.26	0.24	0.41	0.20	0.79	0.31 ± 0.06	VR3	R	**404502**
		15.94	0.26	0.24	0.41	0.20	0.79	0.31 ± 0.06	VR3	V	**404506**
16.93	**18.90**	15.94	0.59	0.56	0.98	0.39	1.77	0.79 ± 0.16	VR1	R	**404500**
		15.94	0.59	0.56	0.98	0.39	1.77	0.79 ± 0.16	VR1	V	**404504**
16.93	**17.13**	16.54	1.18	1.28	2.56	0.94	4.53	1.97 ± 0.47	VR4	R	**404303**
		16.54	0.83	1.28	2.56	0.94	4.53	1.97 ± 0.47	VR6	R	**470431**
17.13	**17.32**	16.73	1.18	1.28	2.56	0.94	4.53	1.97 ± 0.47	VR4	R	**404353**
		16.73	0.83	1.28	2.56	0.94	4.53	1.97 ± 0.47	VR6	R	**470436**

Dimensions									Design	Lip code	Design-nation
Shaft diameter range d_1 over	incl.	Seal inside diameter, free state d	Nominal seal height c	Seal seat width b_1	Nominal seal width b	Clearance D_1 (= d_1+) max	Counterface D (= d_1 +) min	Seal fitted width B_1			
in.		in.							–	–	–
17.32	**17.52**	16.89	1.18	1.28	2.56	0.94	4.53	1.97 ± 0.47	VR4	R	**404403**
		16.89	0.83	1.28	2.56	0.94	4.53	1.97 ± 0.47	VR6	R	**470441**
17.52	**17.72**	17.09	1.18	1.28	2.56	0.94	4.53	1.97 ± 0.47	VR4	R	**404453**
		17.09	0.83	1.28	2.56	0.94	4.53	1.97 ± 0.47	VR6	R	**470446**
17.72	**17.91**	17.28	1.18	1.28	2.56	0.94	4.53	1.97 ± 0.47	VR4	R	**404503**
		17.28	0.83	1.28	2.56	0.94	4.53	1.97 ± 0.47	VR6	R	**470451**
17.91	**18.11**	17.48	1.18	1.28	2.56	0.94	4.53	1.97 ± 0.47	VR4	R	**404553**
		17.48	0.83	1.28	2.56	0.94	4.53	1.97 ± 0.47	VR6	R	**470456**
18.11	**18.31**	17.64	1.18	1.28	2.56	0.94	4.53	1.97 ± 0.47	VR4	R	**404603**
		17.64	0.83	1.28	2.56	0.94	4.53	1.97 ± 0.47	VR6	R	**470461**
18.31	**18.50**	17.83	1.18	1.28	2.56	0.94	4.53	1.97 ± 0.47	VR4	R	**404653**
		17.83	0.83	1.28	2.56	0.94	4.53	1.97 ± 0.47	VR6	R	**470466**
18.50	**18.70**	18.03	1.18	1.28	2.56	0.94	4.53	1.97 ± 0.47	VR4	R	**404703**
		18.03	0.83	1.28	2.56	0.94	4.53	1.97 ± 0.47	VR6	R	**470471**
18.70	**18.90**	18.23	1.18	1.28	2.56	0.94	4.53	1.97 ± 0.47	VR4	R	**404753**
		18.23	0.83	1.28	2.56	0.94	4.53	1.97 ± 0.47	VR6	R	**470476**
18.70	**20.08**	17.72	0.26	0.24	0.41	0.20	0.79	0.31 ± 0.06	VR3	R	**405002**
		17.72	0.26	0.24	0.41	0.20	0.79	0.31 ± 0.06	VR3	V	**405006**
20.08	**21.26**	18.58	0.26	0.24	0.41	0.20	0.79	0.31 ± 0.06	VR3	R	**405252**
		18.58	0.26	0.24	0.41	0.20	0.79	0.31 ± 0.06	VR3	V	**405256**
18.90	**20.87**	17.72	0.59	0.56	0.98	0.39	1.77	0.79 ± 0.16	VR1	R	**405000**
		17.72	0.59	0.56	0.98	0.39	1.77	0.79 ± 0.16	VR1	V	**405004**
18.90	**19.09**	18.43	1.18	1.28	2.56	0.94	4.53	1.97 ± 0.47	VR4	R	**404803**
		18.43	0.83	1.28	2.56	0.94	4.53	1.97 ± 0.47	VR6	R	**470481**
19.09	**19.29**	18.62	1.18	1.28	2.56	0.94	4.53	1.97 ± 0.47	VR4	R	**404853**
		18.62	0.83	1.28	2.56	0.94	4.53	1.97 ± 0.47	VR6	R	**470486**
19.29	**19.49**	18.82	1.18	1.28	2.56	0.94	4.53	1.97 ± 0.47	VR4	R	**404903**
		18.82	0.83	1.28	2.56	0.94	4.53	1.97 ± 0.47	VR6	R	**470491**
19.49	**19.69**	19.02	1.18	1.28	2.56	0.94	4.53	1.97 ± 0.47	VR4	R	**404953**
		19.02	0.83	1.28	2.56	0.94	4.53	1.97 ± 0.47	VR6	R	**470496**
19.69	**19.88**	19.21	1.18	1.28	2.56	0.94	4.53	1.97 ± 0.47	VR4	R	**405003**
		19.21	0.83	1.28	2.56	0.94	4.53	1.97 ± 0.47	VR6	R	**470501**
19.88	**20.08**	19.41	1.18	1.28	2.56	0.94	4.53	1.97 ± 0.47	VR4	R	**405053**
		19.41	0.83	1.28	2.56	0.94	4.53	1.97 ± 0.47	VR6	R	**470506**
20.08	**20.28**	19.57	1.18	1.28	2.56	0.94	4.53	1.97 ± 0.47	VR4	R	**405103**
		19.57	0.83	1.28	2.56	0.94	4.53	1.97 ± 0.47	VR6	R	**470511**
20.28	**20.47**	19.76	1.18	1.28	2.56	0.94	4.53	1.97 ± 0.47	VR4	R	**405153**
		19.76	0.83	1.28	2.56	0.94	4.53	1.97 ± 0.47	VR6	R	**470516**
20.47	**20.67**	19.96	1.18	1.28	2.56	0.94	4.53	1.97 ± 0.47	VR4	R	**405203**
		19.96	0.83	1.28	2.56	0.94	4.53	1.97 ± 0.47	VR6	R	**470521**
20.67	**20.87**	20.16	1.18	1.28	2.56	0.94	4.53	1.97 ± 0.47	VR4	R	**405253**
		20.16	0.83	1.28	2.56	0.94	4.53	1.97 ± 0.47	VR6	R	**470526**
21.26	**22.64**	19.49	0.26	0.24	0.41	0.20	0.79	0.31 ± 0.06	VR3	R	**405502**
		19.49	0.26	0.24	0.41	0.20	0.79	0.31 ± 0.06	VR3	V	**405506**

V-ring seals – inch dimensions, for North American market
d_1 **20.87 – 28.74** in.

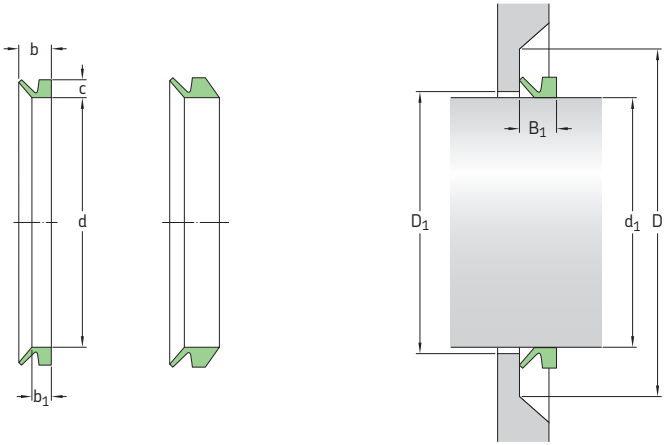

Dimensions									Design	Lip code	Designation
Shaft diameter range d_1 over	incl.	Seal inside diameter, free state d	Nominal seal height c	Seal seat width b_1	Nominal seal width b	Clearance D_1 (= d_1+) max	Counterface D (= d_1 +) min	Seal fitted width B_1			
in.		in.							–	–	–
20.87	**22.83**	19.49	0.59	0.56	0.98	0.39	1.77	0.79 ± 0.16	VR1	R	**405500**
		19.49	0.59	0.56	0.98	0.39	1.77	0.79 ± 0.16	VR1	V	**405504**
20.87	**21.06**	20.35	1.18	1.28	2.56	0.94	4.53	1.97 ± 0.47	VR4	R	**405303**
		20.35	0.83	1.28	2.56	0.94	4.53	1.97 ± 0.47	VR6	R	**470531**
21.06	**21.26**	20.51	1.18	1.28	2.56	0.94	4.53	1.97 ± 0.47	VR4	R	**405353**
		20.51	0.83	1.28	2.56	0.94	4.53	1.97 ± 0.47	VR6	R	**470536**
21.26	**21.46**	20.71	1.18	1.28	2.56	0.94	4.53	1.97 ± 0.47	VR4	R	**405403**
		20.71	0.83	1.28	2.56	0.94	4.53	1.97 ± 0.47	VR6	R	**470541**
21.46	**21.65**	20.91	1.18	1.28	2.56	0.94	4.53	1.97 ± 0.47	VR4	R	**405453**
		20.91	0.83	1.28	2.56	0.94	4.53	1.97 ± 0.47	VR6	R	**470546**
21.65	**21.85**	21.10	1.18	1.28	2.56	0.94	4.53	1.97 ± 0.47	VR4	R	**405503**
		21.10	0.83	1.28	2.56	0.94	4.53	1.97 ± 0.47	VR6	R	**470551**
21.85	**22.05**	21.30	1.18	1.28	2.56	0.94	4.53	1.97 ± 0.47	VR4	R	**405553**
		21.30	0.83	1.28	2.56	0.94	4.53	1.97 ± 0.47	VR6	R	**470556**
22.05	**22.24**	21.50	1.18	1.28	2.56	0.94	4.53	1.97 ± 0.47	VR4	R	**405603**
		21.50	0.83	1.28	2.56	0.94	4.53	1.97 ± 0.47	VR6	R	**470561**
22.24	**22.44**	21.65	1.18	1.28	2.56	0.94	4.53	1.97 ± 0.47	VR4	R	**405653**
		21.65	0.83	1.28	2.56	0.94	4.53	1.97 ± 0.47	VR6	R	**470566**
22.44	**22.64**	21.85	1.18	1.28	2.56	0.94	4.53	1.97 ± 0.47	VR4	R	**405703**
		21.85	0.83	1.28	2.56	0.94	4.53	1.97 ± 0.47	VR6	R	**470571**
22.64	**22.83**	22.05	1.18	1.28	2.56	0.94	4.53	1.97 ± 0.47	VR4	R	**405753**
		22.05	0.83	1.28	2.56	0.94	4.53	1.97 ± 0.47	VR6	R	**470576**
22.64	**24.61**	21.26	0.26	0.24	0.41	0.20	0.79	0.31 ± 0.06	VR3	R	**406002**
		21.26	0.26	0.24	0.41	0.20	0.79	0.31 ± 0.06	VR3	V	**406006**
22.83	**24.80**	21.26	0.59	0.56	0.98	0.39	1.77	0.79 ± 0.16	VR1	R	**406000**
		21.26	0.59	0.56	0.98	0.39	1.77	0.79 ± 0.16	VR1	V	**406004**

Dimensions									Design	Lip code	Design-nation
Shaft diameter range d_1 over	incl.	Seal inside diameter, free state d	Nominal seal height c	Seal seat width b_1	Nominal seal width b	Clearance D_1 (= d_1+) max	Counterface D (= d_1 +) min	Seal fitted width B_1			
in.		in.							–	–	–
22.83	**23.03**	22.24	1.18	1.28	2.56	0.94	4.53	1.97 ± 0.47	VR4	R	**405803**
		22.24	0.83	1.28	2.56	0.94	4.53	1.97 ± 0.47	VR6	R	**470581**
23.03	**23.23**	22.44	1.18	1.28	2.56	0.94	4.53	1.97 ± 0.47	VR4	R	**405853**
		22.44	0.83	1.28	2.56	0.94	4.53	1.97 ± 0.47	VR6	R	**470586**
23.23	**23.62**	22.64	1.18	1.28	2.56	0.94	4.53	1.97 ± 0.47	VR4	R	**405903**
		22.64	0.83	1.28	2.56	0.94	4.53	1.97 ± 0.47	VR6	R	**470591**
23.62	**24.02**	22.91	1.18	1.28	2.56	0.94	4.53	1.97 ± 0.47	VR4	R	**406003**
		22.91	0.83	1.28	2.56	0.94	4.53	1.97 ± 0.47	VR6	R	**470601**
24.02	**24.41**	23.31	1.18	1.28	2.56	0.94	4.53	1.97 ± 0.47	VR4	R	**406103**
		23.31	0.83	1.28	2.56	0.94	4.53	1.97 ± 0.47	VR6	R	**470611**
24.41	**24.80**	23.70	1.18	1.28	2.56	0.94	4.53	1.97 ± 0.47	VR4	R	**406203**
		23.70	0.83	1.28	2.56	0.94	4.53	1.97 ± 0.47	VR6	R	**470621**
24.21	**26.57**	23.62	0.26	0.24	0.41	0.20	0.79	0.31 ± 0.06	VR3	R	**406502**
		23.62	0.26	0.24	0.41	0.20	0.79	0.31 ± 0.06	VR3	V	**406506**
24.80	**26.18**	23.62	0.59	0.56	0.98	0.39	1.77	0.79 ± 0.16	VR1	R	**406500**
		23.62	0.59	0.56	0.98	0.39	1.77	0.79 ± 0.16	VR1	V	**406504**
24.80	**25.20**	24.09	1.18	1.28	2.56	0.94	4.53	1.97 ± 0.47	VR4	R	**406303**
		24.09	0.83	1.28	2.56	0.94	4.53	1.97 ± 0.47	VR6	R	**470631**
25.20	**25.59**	24.45	1.18	1.28	2.56	0.94	4.53	1.97 ± 0.47	VR4	R	**406403**
		24.45	0.83	1.28	2.56	0.94	4.53	1.97 ± 0.47	VR6	R	**470641**
25.59	**25.98**	24.84	1.18	1.28	2.56	0.94	4.53	1.97 ± 0.47	VR4	R	**406503**
		24.84	0.83	1.28	2.56	0.94	4.53	1.97 ± 0.47	VR6	R	**470651**
25.98	**26.38**	25.20	1.18	1.28	2.56	0.94	4.53	1.97 ± 0.47	VR4	R	**406603**
		25.20	0.83	1.28	2.56	0.94	4.53	1.97 ± 0.47	VR6	R	**470661**
26.57	**27.95**	24.80	0.26	0.24	0.41	0.20	0.79	0.31 ± 0.06	VR3	R	**407002**
		24.80	0.26	0.24	0.41	0.20	0.79	0.31 ± 0.06	VR3	V	**407006**
26.18	**27.76**	24.80	0.59	0.56	0.98	0.39	1.77	0.79 ± 0.16	VR1	R	**407000**
		24.80	0.59	0.56	0.98	0.39	1.77	0.79 ± 0.16	VR1	V	**407004**
26.38	**26.77**	25.59	1.18	1.28	2.56	0.94	4.53	1.97 ± 0.47	VR4	R	**406703**
		25.59	0.83	1.28	2.56	0.94	4.53	1.97 ± 0.47	VR6	R	**470671**
26.77	**27.17**	25.98	1.18	1.28	2.56	0.94	4.53	1.97 ± 0.47	VR4	R	**406803**
		25.98	0.83	1.28	2.56	0.94	4.53	1.97 ± 0.47	VR6	R	**470681**
27.17	**27.56**	26.38	1.18	1.28	2.56	0.94	4.53	1.97 ± 0.47	VR4	R	**406903**
		26.38	0.83	1.28	2.56	0.94	4.53	1.97 ± 0.47	VR6	R	**470691**
27.56	**27.95**	26.77	1.18	1.28	2.56	0.94	4.53	1.97 ± 0.47	VR4	R	**407003**
		26.77	0.83	1.28	2.56	0.94	4.53	1.97 ± 0.47	VR6	R	**470701**
27.95	**29.13**	26.38	0.26	0.24	0.41	0.20	0.79	0.31 ± 0.06	VR3	R	**407252**
		26.38	0.26	0.24	0.41	0.20	0.79	0.31 ± 0.06	VR3	V	**407256**
27.76	**29.33**	26.38	0.59	0.56	0.98	0.39	1.77	0.79 ± 0.16	VR1	R	**407250**
		26.38	0.59	0.56	0.98	0.39	1.77	0.79 ± 0.16	VR1	V	**407254**
27.95	**28.35**	27.13	1.18	1.28	2.56	0.94	4.53	1.97 ± 0.47	VR4	R	**407103**
		27.13	0.83	1.28	2.56	0.94	4.53	1.97 ± 0.47	VR6	R	**470711**
28.35	**28.74**	27.52	1.18	1.28	2.56	0.94	4.53	1.97 ± 0.47	VR4	R	**407203**
		27.52	0.83	1.28	2.56	0.94	4.53	1.97 ± 0.47	VR6	R	**470721**

V-ring seals – inch dimensions, for North American market
d_1 **28.74 – 39.96** in.

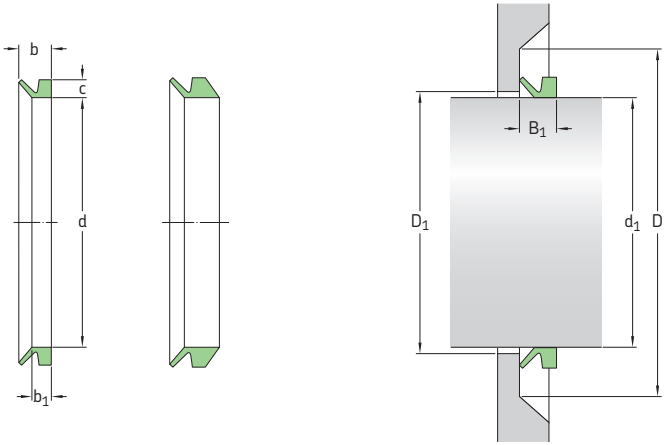

Dimensions									Design	Lip code	Design-nation
Shaft diameter range d_1 over	incl.	Seal inside diameter, free state d	Nominal seal height c	Seal seat width b_1	Nominal seal width b	Clearance D_1 (= d_1+) max	Counterface D (= d_1 +) min	Seal fitted width B_1			
in.		in.							–	–	–
28.74	**29.13**	27.91	1.18	1.28	2.56	0.94	4.53	1.97 ± 0.47	VR4	R	**407303**
		27.91	0.83	1.28	2.56	0.94	4.53	1.97 ± 0.47	VR6	R	**470731**
29.13	**29.53**	28.27	1.18	1.28	2.56	0.94	4.53	1.97 ± 0.47	VR4	R	**407403**
		28.27	0.83	1.28	2.56	0.94	4.53	1.97 ± 0.47	VR6	R	**470741**
29.13	**30.51**	27.76	0.26	0.24	0.41	0.20	0.79	0.31 ± 0.06	VR3	R	**407502**
		27.76	0.26	0.24	0.41	0.20	0.79	0.31 ± 0.06	VR3	V	**407506**
29.33	**30.91**	27.76	0.59	0.56	0.98	0.39	1.77	0.79 ± 0.16	VR1	R	**407500**
		27.76	0.59	0.56	0.98	0.39	1.77	0.79 ± 0.16	VR1	V	**407504**
29.53	**29.84**	28.66	1.18	1.28	2.56	0.94	4.53	1.97 ± 0.47	VR4	R	**407503**
		28.66	0.83	1.28	2.56	0.94	4.53	1.97 ± 0.47	VR6	R	**470751**
29.84	**30.16**	28.94	1.18	1.28	2.56	0.94	4.53	1.97 ± 0.47	VR4	R	**407603**
		28.94	0.83	1.28	2.56	0.94	4.53	1.97 ± 0.47	VR6	R	**470761**
30.16	**30.47**	29.25	1.18	1.28	2.56	0.94	4.53	1.97 ± 0.47	VR4	R	**407703**
		29.25	0.83	1.28	2.56	0.94	4.53	1.97 ± 0.47	VR6	R	**470771**
30.47	**30.83**	29.57	1.18	1.28	2.56	0.94	4.53	1.97 ± 0.47	VR4	R	**407803**
		29.57	0.83	1.28	2.56	0.94	4.53	1.97 ± 0.47	VR6	R	**470781**
30.83	**31.18**	29.88	1.18	1.28	2.56	0.94	4.53	1.97 ± 0.47	VR4	R	**407903**
		29.88	0.83	1.28	2.56	0.94	4.53	1.97 ± 0.47	VR6	R	**470791**
30.51	**32.48**	29.33	0.26	0.24	0.41	0.20	0.79	0.31 ± 0.06	VR3	R	**408002**
		29.33	0.26	0.24	0.41	0.20	0.79	0.31 ± 0.06	VR3	V	**408006**
30.91	**32.68**	29.33	0.59	0.56	0.98	0.39	1.77	0.79 ± 0.16	VR1	R	**408000**
		29.33	0.59	0.56	0.98	0.39	1.77	0.79 ± 0.16	VR1	V	**408004**
31.18	**31.54**	30.24	1.18	1.28	2.56	0.94	4.53	1.97 ± 0.47	VR4	R	**408003**
		30.24	0.83	1.28	2.56	0.94	4.53	1.97 ± 0.47	VR6	R	**470801**
31.54	**31.89**	30.59	1.18	1.28	2.56	0.94	4.53	1.97 ± 0.47	VR4	R	**408103**
		30.59	0.83	1.28	2.56	0.94	4.53	1.97 ± 0.47	VR6	R	**470811**

Dimensions									Design	Lip code	Design-nation
Shaft diameter range d_1 over	incl.	Seal inside diameter, free state d	Nominal seal height c	Seal seat width b_1	Nominal seal width b	Clearance D_1 (= d_1+) max	Counterface D (= d_1 +) min	Seal fitted width B_1			
in.		in.							–	–	–
31.89	**32.32**	30.94	1.18	1.28	2.56	0.94	4.53	1.97 ± 0.47	VR4	R	**408203**
		30.94	0.83	1.28	2.56	0.94	4.53	1.97 ± 0.47	VR6	R	**470821**
32.32	**32.72**	31.34	1.18	1.28	2.56	0.94	4.53	1.97 ± 0.47	VR4	R	**408303**
		31.34	0.83	1.28	2.56	0.94	4.53	1.97 ± 0.47	VR6	R	**470831**
32.48	**34.45**	30.91	0.26	0.24	0.41	0.20	0.79	0.31 ± 0.06	VR3	R	**408502**
		30.91	0.26	0.24	0.41	0.20	0.79	0.31 ± 0.06	VR3	V	**408506**
32.68	**34.45**	30.91	0.59	0.56	0.98	0.39	1.77	0.79 ± 0.16	VR1	R	**408500**
		30.91	0.59	0.56	0.98	0.39	1.77	0.79 ± 0.16	VR1	V	**408504**
32.72	**33.11**	31.69	1.18	1.28	2.56	0.94	4.53	1.97 ± 0.47	VR4	R	**408403**
		31.69	0.83	1.28	2.56	0.94	4.53	1.97 ± 0.47	VR6	R	**470841**
33.11	**33.50**	32.05	1.18	1.28	2.56	0.94	4.53	1.97 ± 0.47	VR4	R	**408503**
		32.05	0.83	1.28	2.56	0.94	4.53	1.97 ± 0.47	VR6	R	**470851**
33.50	**33.90**	32.44	1.18	1.28	2.56	0.94	4.53	1.97 ± 0.47	VR4	R	**408603**
		32.44	0.83	1.28	2.56	0.94	4.53	1.97 ± 0.47	VR6	R	**470861**
33.90	**34.29**	32.80	1.18	1.28	2.56	0.94	4.53	1.97 ± 0.47	VR4	R	**408703**
		32.80	0.83	1.28	2.56	0.94	4.53	1.97 ± 0.47	VR6	R	**470871**
34.29	**34.72**	33.19	1.18	1.28	2.56	0.94	4.53	1.97 ± 0.47	VR4	R	**408803**
		33.19	0.83	1.28	2.56	0.94	4.53	1.97 ± 0.47	VR6	R	**470881**
34.45	**36.42**	32.48	0.26	0.24	0.41	0.20	0.79	0.31 ± 0.06	VR3	R	**409002**
		32.48	0.26	0.24	0.41	0.20	0.79	0.31 ± 0.06	VR3	V	**409006**
34.45	**36.22**	32.48	0.59	0.56	0.98	0.39	1.77	0.79 ± 0.16	VR1	R	**409000**
		32.48	0.59	0.56	0.98	0.39	1.77	0.79 ± 0.16	VR1	V	**409004**
34.72	**35.12**	33.58	1.18	1.28	2.56	0.94	4.53	1.97 ± 0.47	VR4	R	**408903**
		33.58	0.83	1.28	2.56	0.94	4.53	1.97 ± 0.47	VR6	R	**470891**
35.12	**35.91**	34.29	1.18	1.28	2.56	0.94	4.53	1.97 ± 0.47	VR4	R	**409003**
		34.29	0.83	1.28	2.56	0.94	4.53	1.97 ± 0.47	VR6	R	**470901**
35.91	**36.30**	34.65	1.18	1.28	2.56	0.94	4.53	1.97 ± 0.47	VR4	R	**409203**
		34.65	0.83	1.28	2.56	0.94	4.53	1.97 ± 0.47	VR6	R	**470921**
36.42	**38.39**	34.06	0.26	0.24	0.41	0.20	0.79	0.31 ± 0.06	VR3	R	**409502**
		34.06	0.26	0.24	0.41	0.20	0.79	0.31 ± 0.06	VR3	V	**409506**
36.22	**37.99**	34.06	0.59	0.56	0.98	0.39	1.77	0.79 ± 0.16	VR1	R	**409500**
		34.06	0.59	0.56	0.98	0.39	1.77	0.79 ± 0.16	VR1	V	**409504**
36.30	**36.73**	35.04	1.18	1.28	2.56	0.94	4.53	1.97 ± 0.47	VR4	R	**409303**
		35.04	0.83	1.28	2.56	0.94	4.53	1.97 ± 0.47	VR6	R	**470931**
36.73	**37.17**	35.43	1.18	1.28	2.56	0.94	4.53	1.97 ± 0.47	VR4	R	**409403**
		35.43	0.83	1.28	2.56	0.94	4.53	1.97 ± 0.47	VR6	R	**470941**
37.17	**37.60**	35.87	1.18	1.28	2.56	0.94	4.53	1.97 ± 0.47	VR4	R	**409503**
		35.87	0.83	1.28	2.56	0.94	4.53	1.97 ± 0.47	VR6	R	**470951**
37.60	**38.03**	36.26	1.18	1.28	2.56	0.94	4.53	1.97 ± 0.47	VR4	R	**409603**
		36.26	0.83	1.28	2.56	0.94	4.53	1.97 ± 0.47	VR6	R	**470961**
38.39	**40.35**	35.83	0.26	0.24	0.41	0.20	0.79	0.31 ± 0.06	VR3	R	**410002**
		35.83	0.26	0.24	0.41	0.20	0.79	0.31 ± 0.06	VR3	V	**410006**
37.99	**39.96**	35.83	0.59	0.56	0.98	0.39	1.77	0.79 ± 0.16	VR1	R	**410000**
		35.83	0.59	0.56	0.98	0.39	1.77	0.79 ± 0.16	VR1	V	**410004**

V-ring seals – inch dimensions, for North American market
d_1 **38.03 – 56.69** in.

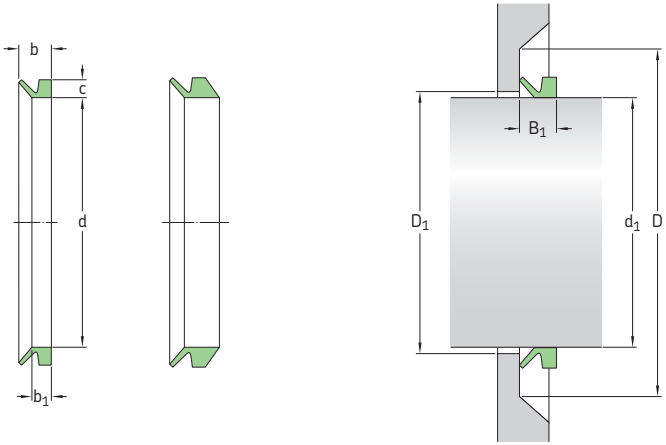

Dimensions Shaft diameter range d_1 over	incl.	Seal inside diameter, free state d	Nominal seal height c	Seal seat width b_1	Nominal seal width b	Clearance D_1 (= d_1+) max	Counterface D (= d_1 +) min	Seal fitted width B_1	Design	Lip code	Designation
in.		in.							–	–	–
38.03	**38.46**	36.69	1.18	1.28	2.56	0.94	4.53	1.97 ± 0.47	VR4	R	**409703**
		36.69	0.83	1.28	2.56	0.94	4.53	1.97 ± 0.47	VR6	R	**470971**
38.46	**38.90**	37.09	1.18	1.28	2.56	0.94	4.53	1.97 ± 0.47	VR4	R	**409803**
		37.09	0.83	1.28	2.56	0.94	4.53	1.97 ± 0.47	VR6	R	**470981**
38.90	**39.33**	37.52	1.18	1.28	2.56	0.94	4.53	1.97 ± 0.47	VR4	R	**409903**
		37.52	0.83	1.28	2.56	0.94	4.53	1.97 ± 0.47	VR6	R	**470991**
39.33	**39.76**	37.91	1.18	1.28	2.56	0.94	4.53	1.97 ± 0.47	VR4	R	**410003**
		37.91	0.83	1.28	2.56	0.94	4.53	1.97 ± 0.47	VR6	R	**471001**
39.76	**40.35**	38.31	1.18	1.28	2.56	0.94	4.53	1.97 ± 0.47	VR4	R	**410203**
		38.31	0.83	1.28	2.56	0.94	4.53	1.97 ± 0.47	VR6	R	**471021**
40.35	**42.32**	37.60	0.26	0.24	0.41	0.20	0.79	0.31 ± 0.06	VR3	R	**410502**
		37.60	0.26	0.24	0.41	0.20	0.79	0.31 ± 0.06	VR3	V	**410506**
39.96	**41.93**	37.60	0.59	0.56	0.98	0.39	1.77	0.79 ± 0.16	VR1	R	**410500**
40.35	**41.14**	38.98	1.18	1.28	2.56	0.94	4.53	1.97 ± 0.47	VR4	R	**410403**
		38.98	0.83	1.28	2.56	0.94	4.53	1.97 ± 0.47	VR6	R	**471041**
41.14	**41.93**	39.69	1.18	1.28	2.56	0.94	4.53	1.97 ± 0.47	VR4	R	**410603**
		39.69	0.83	1.28	2.56	0.94	4.53	1.97 ± 0.47	VR6	R	**471061**
42.32	**44.29**	39.37	0.26	0.24	0.41	0.20	0.79	0.31 ± 0.06	VR3	R	**411002**
		39.37	0.26	0.24	0.41	0.20	0.79	0.31 ± 0.06	VR3	V	**411006**
41.93	**43.90**	39.37	0.59	0.56	0.98	0.39	1.77	0.79 ± 0.16	VR1	R	**411000**
41.93	**42.72**	40.43	1.18	1.28	2.56	0.94	4.53	1.97 ± 0.47	VR4	R	**410803**
		40.43	0.83	1.28	2.56	0.94	4.53	1.97 ± 0.47	VR6	R	**471081**
42.72	**43.50**	41.14	1.18	1.28	2.56	0.94	4.53	1.97 ± 0.47	VR4	R	**411003**
		41.14	0.83	1.28	2.56	0.94	4.53	1.97 ± 0.47	VR6	R	**471101**
43.50	**44.29**	41.93	1.18	1.28	2.56	0.94	4.53	1.97 ± 0.47	VR4	R	**411203**
		41.93	0.83	1.28	2.56	0.94	4.53	1.97 ± 0.47	VR6	R	**471121**
44.29	**46.26**	41.14	0.26	0.24	0.41	0.20	0.79	0.31 ± 0.06	VR3	R	**411502**
		41.14	0.26	0.24	0.41	0.20	0.79	0.31 ± 0.06	VR3	V	**411506**

Dimensions									Design	Lip code	Designation
Shaft diameter range d_1 over	incl.	Seal inside diameter, free state d	Nominal seal height c	Seal seat width b_1	Nominal seal width b	Clearance D_1 (= d_1+) max	Counterface D (= d_1 +) min	Seal fitted width B_1			
in.		in.							–	–	–
43.90	**45.87**	41.14	0.59	0.56	0.98	0.39	1.77	0.79 ± 0.16	VR1	R	**411500**
44.29	**45.08**	42.68	1.18	1.28	2.56	0.94	4.53	1.97 ± 0.47	VR4	R	**411403**
		42.68	0.83	1.28	2.56	0.94	4.53	1.97 ± 0.47	VR6	R	**471141**
45.08	**45.87**	43.43	1.18	1.28	2.56	0.94	4.53	1.97 ± 0.47	VR4	R	**411603**
		43.43	0.83	1.28	2.56	0.94	4.53	1.97 ± 0.47	VR6	R	**471161**
46.26	**48.23**	42.91	0.26	0.24	0.41	0.20	0.79	0.31 ± 0.06	VR3	R	**412002**
		42.91	0.26	0.24	0.41	0.20	0.79	0.31 ± 0.06	VR3	V	**412006**
45.87	**47.83**	42.91	0.59	0.56	0.98	0.39	1.77	0.79 ± 0.16	VR1	R	**412000**
45.87	**46.65**	44.13	1.18	1.28	2.56	0.94	4.53	1.97 ± 0.47	VR4	R	**411803**
		44.13	0.83	1.28	2.56	0.94	4.53	1.97 ± 0.47	VR6	R	**471181**
46.65	**47.44**	44.84	1.18	1.28	2.56	0.94	4.53	1.97 ± 0.47	VR4	R	**412003**
		44.84	0.83	1.28	2.56	0.94	4.53	1.97 ± 0.47	VR6	R	**471201**
47.44	**48.23**	45.55	1.18	1.28	2.56	0.94	4.53	1.97 ± 0.47	VR4	R	**412203**
		45.55	0.83	1.28	2.56	0.94	4.53	1.97 ± 0.47	VR6	R	**471221**
48.23	**50.20**	44.69	0.26	0.24	0.41	0.20	0.79	0.31 ± 0.06	VR3	R	**412502**
		44.69	0.26	0.24	0.41	0.20	0.79	0.31 ± 0.06	VR3	V	**412506**
47.83	**50.00**	44.69	0.59	0.56	0.98	0.39	1.77	0.79 ± 0.16	VR1	R	**412500**
48.23	**49.02**	46.30	1.18	1.28	2.56	0.94	4.53	1.97 ± 0.47	VR4	R	**412403**
		46.30	0.83	1.28	2.56	0.94	4.53	1.97 ± 0.47	VR6	R	**471241**
49.02	**50.00**	47.05	1.18	1.28	2.56	0.94	4.53	1.97 ± 0.47	VR4	R	**412603**
		47.05	0.83	1.28	2.56	0.94	4.53	1.97 ± 0.47	VR6	R	**471261**
50.00	**50.98**	47.95	1.18	1.28	2.56	0.94	4.53	1.97 ± 0.47	VR4	R	**412803**
		47.95	0.83	1.28	2.56	0.94	4.53	1.97 ± 0.47	VR6	R	**471281**
50.20	**52.17**	46.46	0.26	0.24	0.41	0.20	0.79	0.31 ± 0.06	VR3	R	**413002**
		46.46	0.26	0.24	0.41	0.20	0.79	0.31 ± 0.06	VR3	V	**413006**
50.00	**51.97**	46.46	0.59	0.56	0.98	0.39	1.77	0.79 ± 0.16	VR1	R	**413000**
50.98	**51.77**	48.82	1.18	1.28	2.56	0.94	4.53	1.97 ± 0.47	VR4	R	**413003**
		48.82	0.83	1.28	2.56	0.94	4.53	1.97 ± 0.47	VR6	R	**471301**
51.77	**52.76**	49.57	1.18	1.28	2.56	0.94	4.53	1.97 ± 0.47	VR4	R	**413253**
		49.57	0.83	1.28	2.56	0.94	4.53	1.97 ± 0.47	VR6	R	**471326**
52.17	**54.13**	48.23	0.26	0.24	0.41	0.20	0.79	0.31 ± 0.06	VR3	R	**413502**
		48.23	0.26	0.24	0.41	0.20	0.79	0.31 ± 0.06	VR3	V	**413506**
51.97	**53.94**	48.23	0.59	0.56	0.98	0.39	1.77	0.79 ± 0.16	VR1	R	**413500**
52.76	**53.74**	50.43	1.18	1.28	2.56	0.94	4.53	1.97 ± 0.47	VR4	R	**413503**
		50.43	0.83	1.28	2.56	0.94	4.53	1.97 ± 0.47	VR6	R	**471351**
53.74	**54.72**	51.38	1.18	1.28	2.56	0.94	4.53	1.97 ± 0.47	VR4	R	**413753**
		51.38	0.83	1.28	2.56	0.94	4.53	1.97 ± 0.47	VR6	R	**471376**
54.13	**56.10**	50.00	0.26	0.24	0.41	0.20	0.79	0.31 ± 0.06	VR3	R	**414002**
		50.00	0.26	0.24	0.41	0.20	0.79	0.31 ± 0.06	VR3	V	**414006**
53.94	**55.91**	50.00	0.59	0.56	0.98	0.39	1.77	0.79 ± 0.16	VR1	R	**414000**
54.72	**55.71**	52.28	1.18	1.28	2.56	0.94	4.53	1.97 ± 0.47	VR4	R	**414003**
		52.28	0.83	1.28	2.56	0.94	4.53	1.97 ± 0.47	VR6	R	**471401**
55.71	**56.69**	53.15	1.18	1.28	2.56	0.94	4.53	1.97 ± 0.47	VR4	R	**414253**
		53.15	0.83	1.28	2.56	0.94	4.53	1.97 ± 0.47	VR6	R	**471426**

V-ring seals – inch dimensions, for North American market
d_1 **56.10 – 79.53** in.

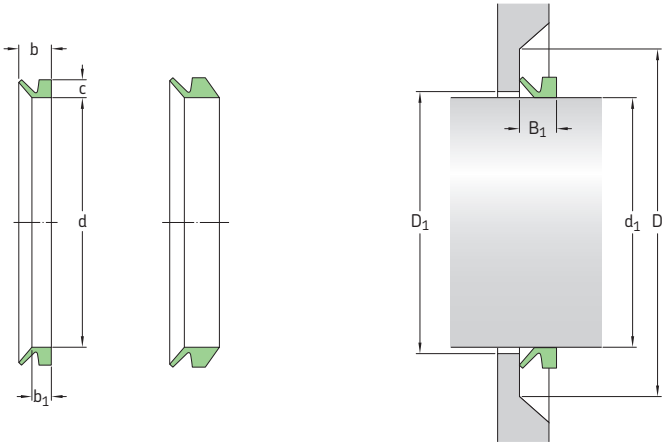

Dimensions Shaft diameter range d_1 over	incl.	Seal inside diameter, free state d	Nominal seal height c	Seal seat width b_1	Nominal seal width b	Clearance D_1 (= d_1 +) max	Counterface D (= d_1 +) min	Seal fitted width B_1	Design	Lip code	Designation
in.		in.							–	–	–
56.10	**58.07**	51.77	0.26	0.24	0.41	0.20	0.79	0.31 ± 0.06	VR3	R	**414502**
		51.77	0.26	0.24	0.41	0.20	0.79	0.31 ± 0.06	VR3	V	**414506**
55.91	**57.87**	51.77	0.59	0.56	0.98	0.39	1.77	0.79 ± 0.16	VR1	R	**414500**
56.69	**57.68**	54.09	1.18	1.28	2.56	0.94	4.53	1.97 ± 0.47	VR4	R	**414503**
		54.09	0.83	1.28	2.56	0.94	4.53	1.97 ± 0.47	VR6	R	**471451**
57.68	**58.66**	55.00	1.18	1.28	2.56	0.94	4.53	1.97 ± 0.47	VR4	R	**414753**
		55.00	0.83	1.28	2.56	0.94	4.53	1.97 ± 0.47	VR6	R	**471476**
58.07	**60.04**	53.54	0.26	0.24	0.41	0.20	0.79	0.31 ± 0.06	VR3	R	**415002**
		53.54	0.26	0.24	0.41	0.20	0.79	0.31 ± 0.06	VR3	V	**415006**
57.87	**59.84**	53.54	0.59	0.56	0.98	0.39	1.77	0.79 ± 0.16	VR1	R	**415000**
58.66	**59.65**	55.87	1.18	1.28	2.56	0.94	4.53	1.97 ± 0.47	VR4	R	**415003**
		55.87	0.83	1.28	2.56	0.94	4.53	1.97 ± 0.47	VR6	R	**471501**
59.65	**60.63**	56.81	1.18	1.28	2.56	0.94	4.53	1.97 ± 0.47	VR4	R	**415253**
		56.81	0.83	1.28	2.56	0.94	4.53	1.97 ± 0.47	VR6	R	**471526**
60.04	**62.01**	55.31	0.26	0.24	0.41	0.20	0.79	0.31 ± 0.06	VR3	R	**415502**
		55.31	0.26	0.24	0.41	0.20	0.79	0.31 ± 0.06	VR3	V	**415506**
59.84	**61.81**	55.31	0.59	0.56	0.98	0.39	1.77	0.79 ± 0.16	VR1	R	**415500**
60.63	**61.81**	57.76	1.18	1.28	2.56	0.94	4.53	1.97 ± 0.47	VR4	R	**415503**
		57.76	0.83	1.28	2.56	0.94	4.53	1.97 ± 0.47	VR6	R	**471551**
61.81	**62.99**	58.86	1.18	1.28	2.56	0.94	4.53	1.97 ± 0.47	VR4	R	**415753**
		58.86	0.83	1.28	2.56	0.94	4.53	1.97 ± 0.47	VR6	R	**471576**
62.01	**63.98**	57.09	0.26	0.24	0.41	0.20	0.79	0.31 ± 0.06	VR3	R	**416002**
		57.09	0.26	0.24	0.41	0.20	0.79	0.31 ± 0.06	VR3	V	**416006**
61.81	**63.78**	57.09	0.59	0.56	0.98	0.39	1.77	0.79 ± 0.16	VR1	R	**416000**
62.99	**64.57**	60.00	1.18	1.28	2.56	0.94	4.53	1.97 ± 0.47	VR4	R	**416003**
		60.00	0.83	1.28	2.56	0.94	4.53	1.97 ± 0.47	VR6	R	**471601**

Dimensions									Design	Lip code	Design-nation
Shaft diameter range d_1 over	incl.	Seal inside diameter, free state d	Nominal seal height c	Seal seat width b_1	Nominal seal width b	Clearance D_1 (= d_1+) max	Counterface D (= d_1 +) min	Seal fitted width B_1			
in.		in.							–	–	–
63.98	**65.94**	58.86	0.26	0.24	0.41	0.20	0.79	0.31 ± 0.06	VR3	R	**416502**
		58.86	0.26	0.24	0.41	0.20	0.79	0.31 ± 0.06	VR3	V	**416506**
63.78	**65.75**	58.86	0.59	0.56	0.98	0.39	1.77	0.79 ± 0.16	VR1	R	**416500**
64.57	**66.14**	61.38	1.18	1.28	2.56	0.94	4.53	1.97 ± 0.47	VR4	R	**416503**
		61.38	0.83	1.28	2.56	0.94	4.53	1.97 ± 0.47	VR6	R	**471651**
65.94	**67.91**	60.63	0.26	0.24	0.41	0.20	0.79	0.31 ± 0.06	VR3	R	**417002**
		60.63	0.26	0.24	0.41	0.20	0.79	0.31 ± 0.06	VR3	V	**417006**
65.75	**67.72**	60.63	0.59	0.56	0.98	0.39	1.77	0.79 ± 0.16	VR1	R	**417000**
66.14	**67.72**	62.83	1.18	1.28	2.56	0.94	4.53	1.97 ± 0.47	VR4	R	**417003**
		62.83	0.83	1.28	2.56	0.94	4.53	1.97 ± 0.47	VR6	R	**471701**
67.91	**69.88**	62.40	0.26	0.24	0.41	0.20	0.79	0.31 ± 0.06	VR3	R	**417502**
		62.40	0.26	0.24	0.41	0.20	0.79	0.31 ± 0.06	VR3	V	**417506**
67.72	**69.69**	62.40	0.59	0.56	0.98	0.39	1.77	0.79 ± 0.16	VR1	R	**417500**
67.72	**69.49**	64.25	1.18	1.28	2.56	0.94	4.53	1.97 ± 0.47	VR4	R	**417503**
		64.25	0.83	1.28	2.56	0.94	4.53	1.97 ± 0.47	VR6	R	**471751**
69.49	**71.26**	65.79	1.18	1.28	2.56	0.94	4.53	1.97 ± 0.47	VR4	R	**418003**
		65.79	0.83	1.28	2.56	0.94	4.53	1.97 ± 0.47	VR6	R	**471801**
69.88	**71.85**	64.17	0.26	0.24	0.41	0.20	0.79	0.31 ± 0.06	VR3	R	**418002**
		64.17	0.26	0.24	0.41	0.20	0.79	0.31 ± 0.06	VR3	V	**418006**
69.69	**71.65**	64.17	0.59	0.56	0.98	0.39	1.77	0.79 ± 0.16	VR1	R	**418000**
71.26	**73.03**	67.48	1.18	1.28	2.56	0.94	4.53	1.97 ± 0.47	VR4	R	**418503**
		67.48	0.83	1.28	2.56	0.94	4.53	1.97 ± 0.47	VR6	R	**471851**
71.85	**73.82**	65.94	0.26	0.24	0.41	0.20	0.79	0.31 ± 0.06	VR3	R	**418502**
		65.94	0.26	0.24	0.41	0.20	0.79	0.31 ± 0.06	VR3	V	**418506**
71.65	**73.62**	65.94	0.59	0.56	0.98	0.39	1.77	0.79 ± 0.16	VR1	R	**418500**
73.03	**75.00**	69.02	1.18	1.28	2.56	0.94	4.53	1.97 ± 0.47	VR4	R	**419003**
		69.02	0.83	1.28	2.56	0.94	4.53	1.97 ± 0.47	VR6	R	**471901**
73.82	**75.79**	67.72	0.26	0.24	0.41	0.20	0.79	0.31 ± 0.06	VR3	R	**419002**
		67.72	0.26	0.24	0.41	0.20	0.79	0.31 ± 0.06	VR3	V	**419006**
73.62	**75.59**	67.72	0.59	0.56	0.98	0.39	1.77	0.79 ± 0.16	VR1	R	**419000**
75.00	**76.97**	70.63	1.18	1.28	2.56	0.94	4.53	1.97 ± 0.47	VR4	R	**419503**
		70.63	0.83	1.28	2.56	0.94	4.53	1.97 ± 0.47	VR6	R	**471951**
75.79	**77.76**	69.49	0.26	0.24	0.41	0.20	0.79	0.31 ± 0.06	VR3	R	**419502**
		69.49	0.26	0.24	0.41	0.20	0.79	0.31 ± 0.06	VR3	V	**419506**
75.59	**77.56**	69.49	0.59	0.56	0.98	0.39	1.77	0.79 ± 0.16	VR1	R	**419500**
76.97	**79.13**	72.60	1.18	1.28	2.56	0.94	4.53	1.97 ± 0.47	VR4	R	**420003**
		72.60	0.83	1.28	2.56	0.94	4.53	1.97 ± 0.47	VR6	R	**472001**
77.76	**79.72**	71.26	0.26	0.24	0.41	0.20	0.79	0.31 ± 0.06	VR3	R	**420002**
		71.26	0.26	0.24	0.41	0.20	0.79	0.31 ± 0.06	VR3	V	**420006**
77.56	**79.53**	71.26	0.59	0.56	0.98	0.39	1.77	0.79 ± 0.16	VR1	R	**420000**

MVR axial shaft seals

General

For added protection in extremely contaminated applications, SKF also offers MVR seals. Like V-ring seals, MVR seals also seal axially and function by combining lip contact with centrifugal "flinging" action. MVR seals are, however, different from V-rings in that their rubber element is stretch fit into a metal case. The metal case is then press fit onto the shaft. The case provides excellent protection from heavy debris and enables the seal to accommodate high rotational speeds without requiring auxiliary clamping devices.

MVR seals are used in rotating shaft applications such as gearboxes, speed reducers, saws, lathes, motors, mixers, where high levels of contaminants reduce the service life of radial shaft seals and bearings. MVR seals can also serve as primary seals to retain high-viscosity lubricants or exclude contaminants in dry-running applications.

Advantages and user benefits

- The metal case serves as a support and deflector, protecting the rubber body and lip from damage and displacement by external debris like rocks and aggressive media.
- The case also often functions as a holder that keeps the rubber lip in position in high-speed applications. No additional axial retention is required.
- Narrow installation widths are possible thanks to the compact design.
- Frictional heat build-up and torque drag are very low compared to those of contacting radial shaft seals. As rotational speed increases, the MVR sealing lip lifts off the counterface surface starting at about 12 m/s *(2 360 ft/min)* and drops to zero contact by 20 m/s *(3 900 ft/min)*. The high rotational speed helps exclude contaminants while minimizing power loss.
- The service life of MVR seals is considerably higher than that of radial shaft seals in contaminated environments and can extend to thousands of hours.

Design and material

The MVR seals are made of a nitrile rubber material with very good wear resistance. Other elastomers are also available on request.

The standard metal element is zinc-plated cold-rolled carbon steel. Acid-resistant steel, similar to SAE 316, is available on request.

There are two different MVR seal designs: the basic MVR1 seal and the MVR2 seal with case extension (→ **fig. 12**).

Temperature range

The permissible operating temperature range is between –30 and +100 °C *(–20 and +210 °F)*.

Sizes

MVR seals are available for shaft diameters ranging from 10 to 200 mm *(0.394 to 7.874 in.)*. Contact your SKF sales representative for comprehensive information on available sizes.

Fig. 12

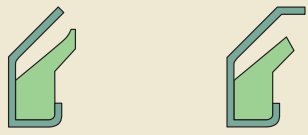

Installation

The inside diameter of MVR seals is machined for a press fit on the shaft (→ **figs. 13** and **14**). As with radial shaft seals, do not hit the metal case with a hammer.

The sealing lip face should be lightly greased prior to installation, but no grease should be applied between the lip and case. A shaft finish of R_a 4 µm *(160 µin.)* is sufficient.

A lead-in chamfer should be provided. No splines or keyways are allowed.

Counterface surfaces for MVR seals should be prepared the same way as for V-rings. Avoid aluminium or soft metals in applications where there will be abrasive contaminants. Sharp peaks on turned surfaces should be removed.

Fig. 13

Installation tool for MVR1

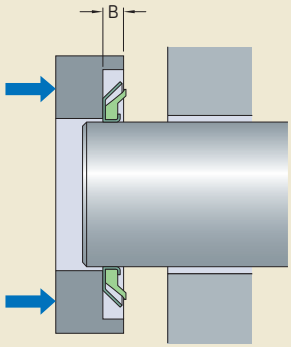

Fig. 14

Installation tool for MVR2

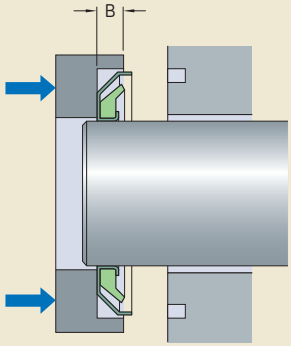

Metal-cased V-ring seals – MVR1 – metric dimensions
d_1 **10 – 135** mm

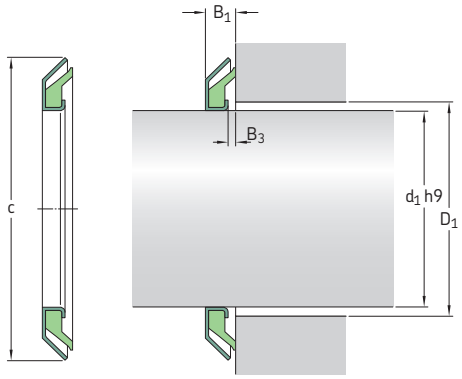

Dimensions					Designation
Shaft diameter d_1	Case outside diameter c	Seal fitted width B_1	Gap width B_3	Max. counterface hole diameter D_1	
mm					–
10	24	3,5	1,0	15	**MVR1-10**
12	26	3,5	1,0	17	**MVR1-12**
15	30	4,0	1,0	21	**MVR1-15**
16	32	4,0	1,0	23	**MVR1-16**
17	32	4,0	1,0	23	**MVR1-17**
18	33	4,0	1,0	24	**MVR1-18**
20	35	4,0	1,0	26	**MVR1-20**
22	40	4,0	1,0	28	**MVR1-22**
24	40	4,0	1,0	30	**MVR1-24**
25	40	4,0	1,0	31	**MVR1-25**
26	40	4,0	1,0	32	**MVR1-26**
28	43	4,0	1,0	34	**MVR1-28**
30	47	4,5	1,0	37	**MVR1-30**
32	49	4,5	1,0	39	**MVR1-32**
35	52	4,5	1,0	42	**MVR1-35**
40	57	4,5	1,0	47	**MVR1-40**
45	62	4,5	1,0	52	**MVR1-45**
48	65	4,5	1,0	55	**MVR1-48**
50	70	5,5	1,0	58	**MVR1-50**
52	72	5,5	1,0	60	**MVR1-52**
53	73	5,5	1,0	61	**MVR1-53**
55	75	5,5	1,0	63	**MVR1-55**
58	78	5,5	1,0	66	**MVR1-58**
60	80	5,5	1,0	68	**MVR1-60**
62	82	5,5	1,0	70	**MVR1-62**
65	85	5,5	1,0	73	**MVR1-65**
68	88	5,5	1,0	76	**MVR1-68**
70	90	5,5	1,0	78	**MVR1-70**
72	92	5,5	1,0	80	**MVR1-72**
75	95	5,5	1,0	83	**MVR1-75**

Special designs are available and new sizes are added gradually.

Dimensions					Designation
Shaft diameter d_1	Case outside diameter c	Seal fitted width B_1	Gap width B_3	Max. counterface hole diameter D_1	
mm					–
78	98	5,5	1,0	86	**MVR1-78**
80	100	5,5	1,0	88	**MVR1-80**
85	105	5,5	1,0	93	**MVR1-85**
90	110	5,5	1,0	98	**MVR1-90**
95	115	5,5	1,0	103	**MVR1-95**
100	120	5,5	1,0	108	**MVR1-100**
105	125	5,5	1,0	113	**MVR1-105**
125	148	6,5	1,0	133	**MVR1-125**
135	159	6,5	1,0	145	**MVR1-135**

Metal-cased V-ring seals – MVR2 – metric dimensions

d_1 **15 – 100** mm

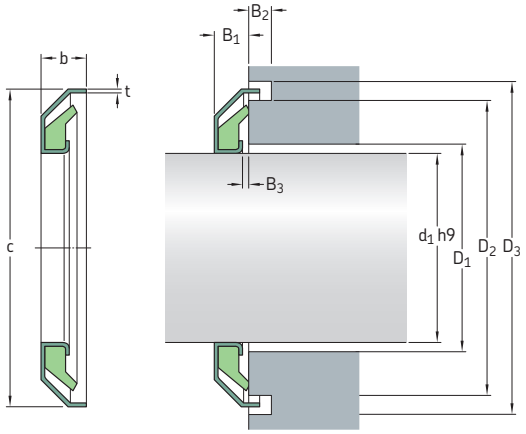

Dimensions										Designation
Shaft diameter d_1	Case outside diameter c	Seal fitted width B_1	Gap width B_3	Total seal case width b	Case groove width B_2	Seal counter-face hole D_1 max	Case groove diameter inside D_2	Case groove diameter outside D_3	Metal case thickness t	
mm										–
15	32	4,0	1,0	6,0	3	21	29	34	0,5	**MVR2-15**
17	34	4,0	1,0	6,0	3	23	31	36	0,5	**MVR2-17**
20	37	4,0	1,0	6,0	3	26	34	39	0,5	**MVR2-20**
25	42	4,0	1,0	6,0	3	31	39	44	0,5	**MVR2-25**
30	48	4,5	1,0	6,5	3	37	45	50	0,5	**MVR2-30**
35	53	4,5	1,0	6,5	3	42	50	55	0,5	**MVR2-35**
40	58	4,5	1,0	6,5	3	47	55	60	0,5	**MVR2-40**
45	63	4,5	1,0	6,5	3	52	60	65	0,5	**MVR2-45**
50	72	5,5	1,0	7,5	3	58	68,5	74	0,75	**MVR2-50**
55	77	5,5	1,0	7,5	3	63	73,5	79	0,75	**MVR2-55**
60	82	5,5	1,0	7,5	3	68	78,5	84	0,75	**MVR2-60**
65	87	5,5	1,0	7,5	3	73	83,5	89	0,75	**MVR2-65**
70	92	5,5	1,0	7,5	3	78	88,5	94	0,75	**MVR2-70**
75	95	5,5	1,0	7,5	3	83	93,5	99	0,75	**MVR2-75**
80	102	5,5	1,0	7,5	3	88	98,5	104	0,75	**MVR2-80**
85	107	5,5	1,0	7,5	3	93	103,5	109	0,75	**MVR2-85**
90	112	5,5	1,0	7,5	3	98	108,5	114	0,75	**MVR2-90**
95	117	5,5	1,0	7,5	3	103	113,5	119	0,75	**MVR2-95**
100	122	5,5	1,0	7,5	3	108	118,5	124	0,75	**MVR2-100**



Axial clamp seals

General **472**

Designs **472**

Design of the sealing arrangement **473**

Installation instructions **474**
8.1 Product table: CT1 and CT4 476

Axial clamp seals

General

SKF axial clamp seals are designed for large and very large shaft diameters. They are suitable for use as primary seals or as secondary seals in applications where the primary seals are subjected to excessive solid or fluid contaminants. Axial clamp seals do not rotate but seal axially against a rotating counterface.

SKF axial clamp seals are made of profiled strips of non-reinforced nitrile rubber and are held firmly in position by stainless steel band clamps. They are available for shaft diameters ranging from 150 to 4 600 mm *(5.9 to 181 in.)*.

The standard range of SKF axial clamp seals is intended for inch-size shaft diameters. Because axial clamp seals are typically installed with an approximate 25 mm *(0.984 in.)* gap between the ends, they may also be used for metric shaft diameters.

Designs

SKF axial clamp seals are manufactured in two different designs:

- CT1 seals (→ **fig. 1**) have the basic design and are held in position by a band clamp. The maximum permissible axial displacement relative to the counterface is +2,4 mm *(0.094 in.)*.
- CT4 seals (→ **fig. 1**) are extra wide and are designed with two band clamps. The maximum axial displacement relative to the counterface is +4,8 mm *(0.189 in.)*.

Fig. 1

Axial clamp seal designs

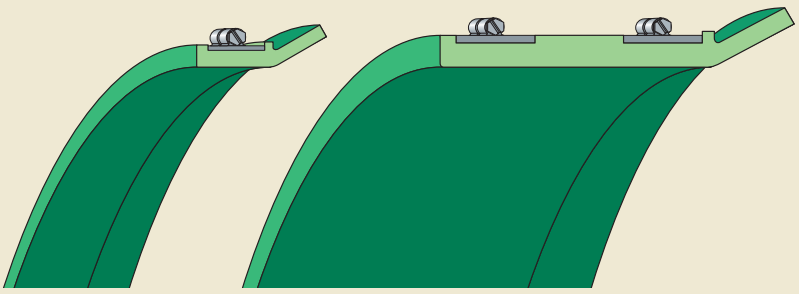

Design of the sealing arrangement

To obtain reliable sealing performance, the seal seat diameter (d_1), seal seat width (b_1) and the seal fitted width (B_1) should meet the requirements listed in **table 1**. SKF also recommends that the seal should abut a shoulder to simplify alignment.

Finely turned counterfaces are adequate for axial clamp seals. The appropriate surface roughness values are R_a 2,5 µm *(115 µin.)* and R_t 12 µm *(480 µin.)*.

Typically, after installation, CT axial clamp seals have an approximate 25 mm *(1 in.)* gap between the ends. This should be arranged at the 6 o'clock position (→ **fig. 2** on **page 474**) to facilitate installation and drainage of contaminants.

Butt-joint seals are also available for certain applications.

Table 1

Application tolerances

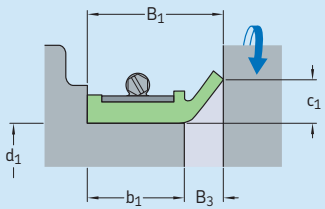

Dimension		Tolerance	Axial clamp seals CT1	CT4
Seal seat diameter, d_1	mm	±1,6	152,40 – 4 572	304,80 – 1 143
	in.	*± 0.063*	*6.000 – 180.000*	*12.000 – 45.000*
Seal fitted width, B_1	mm	±0,8	28,60 – 38,10	38,10 – 92,20
	in.	*± 0.031*	*1.125 – 1.500*	*1.500 – 3.750*
Seal seat width, b_1	mm	±3,2	17,50 – 27	27 – 84
	in.	*± 0.125*	*0.688 – 1.063*	*1.063 – 3.313*
Lip height, c_1	mm	±0,8	12,70	12,70
	in.	*± 0.031*	*0.500*	*0.500*
Gap width, B_3 (max)	mm		11,10	11,10
	in.		*0.437*	*0.437*

8

Installation instructions

Axial clamp seals are supplied as rolled-up coils. They are placed in position on their seat in the housing and bolted lightly together. They are then pushed forward toward the counterface and the gap (or joint) between the two ends is arranged at the 6 o'clock position (→ **fig. 2**). The clamps are finally tightened. The torque applied to the clamp screws should not exceed 7 Nm.

Fig. 2

Sealing arrangement and installation

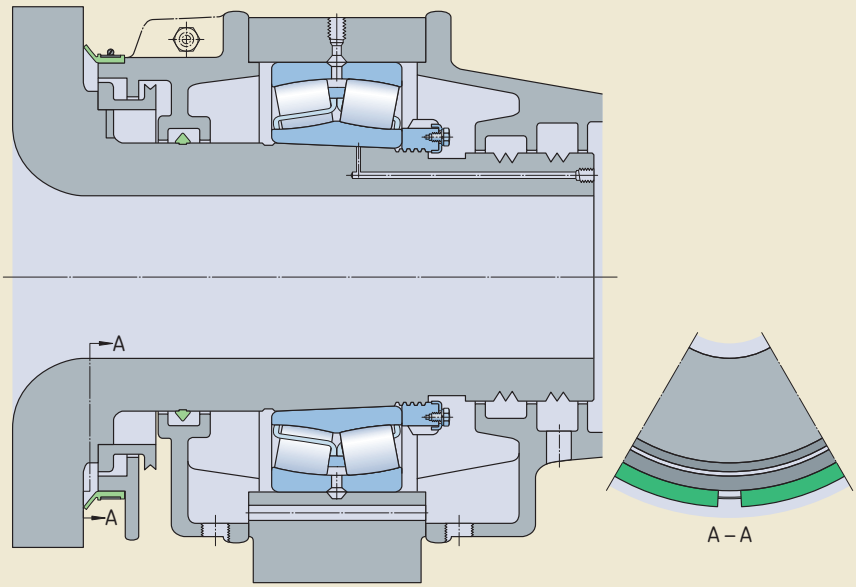

Axial clamp seals – CT1 and CT4 – metric dimensions (converted from inch dimensions)
d_1 **168 – 1 080** mm

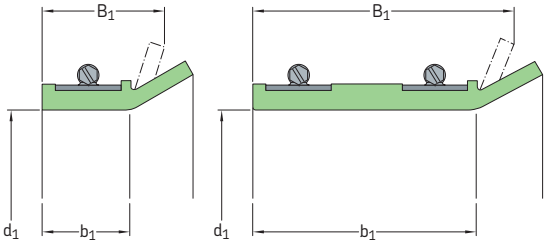

CT1 CT4

See **table 1**, **page 473** for application tolerances.

Dimensions Seal seat diameter d_1	Seal fitted width B_1	Seal seat width b_1	**Design**	**Designation**
mm			–	–
168	28,60	17,50	CT1	**594334**
168,30	28,60	17,50	CT1	**529489**
178	38,10	27	CT1	**523586**
185	30	18,90	CT1	**593637**
209,60	28,60	17,50	CT1	**527820**
219	28,60	17,50	CT1	**529490**
227	28,60	17,50	CT1	**531635**
228,60	28,60	17,50	CT1	**524204**
	28,60	17,50	CT1	**527819**
229	29	17,90	CT1	**528631**
254	28,60	17,50	CT1	**524205**
	28,60	17,50	CT1	**527806**
273	28,60	17,50	CT1	**594369**
280	28,60	17,50	CT1	**524206**
	31,80	20,70	CT1	**524928**
298,40	28,60	17,50	CT1	**593629**
305	31,80	20,70	CT1	**524208**
	38,10	27	CT1	**525582**
330	28,60	17,50	CT1	**524209**
	38,10	27	CT1	**523587**
350,80	38,10	27	CT1	**594110**
355,60	38,10	27	CT1	**530733**
	34,90	23,80	CT1	**593037**
380	38,10	27	CT1	**593171**

Dimensions Seal seat diameter d_1	Seal fitted width B_1	Seal seat width b_1	**Design**	**Designation**
mm			–	–
381	28,60	17,50	CT1	**594025**
387	28,60	17,50	CT1	**594954**
410	23,80	12,70	CT1	**595110**
413	88,90	77,80	CT4	**592934**
425	31,80	20,70	CT1	**523826**
	33,40	22,30	CT1	**524815**
432	38,10	27	CT1	**528535**
444,50	34,90	23,80	CT1	**525737**
445	31,80	20,70	CT1	**522679**
	34,90	23,80	CT1	**523547**
449,30	95,30	84,20	CT4	**528070**
470	28,60	17,50	CT1	**525708**
	31,80	20,70	CT1	**526192**
495	28,60	17,50	CT1	**594181**
508	31,80	20,70	CT1	**524587**
533	32	20,90	CT1	**594241**
546	31,80	20,70	CT1	**524599**
	95,30	84,20	CT4	**526741**
554	31,80	20,70	CT1	**524210**
557	28,60	17,50	CT1	**524211**
559	31,80	20,70	CT1	**524347**
571,50	31,80	20,70	CT1	**524212**
578	34,90	23,80	CT1	**524657**

Dimensions			Design	Designation
Seal seat diameter d_1	Seal fitted width B_1	Seal seat width b_1		
mm			–	–
594	34,90	23,80	CT1	**525627**
595	28,60	17,50	CT1	**525031**
597	34,90	23,80	CT1	**524364**
600	30	18,90	CT1	**594431**
603	31,80	20,70	CT1	**524365**
	34,90	23,80	CT1	**523184**
	46	34,90	CT4	**528651**
603,30	34,90	23,80	CT1	**525637**
	46	34,90	CT4	**528267**
616	47,60	36,50	CT4	**529276**
629	31,80	20,70	CT1	**524213**
638	34,90	23,80	CT1	**524214**
655	40	28,90	CT4	**594784**
660	34,90	23,80	CT1	**524591**
684	28,60	17,50	CT1	**524215**
	73	61,90	CT4	**593604**
692	34,90	23,80	CT1	**524592**
705	34,90	23,80	CT1	**524216**
	60,30	49,20	CT4	**528268**
711	31,80	20,70	CT1	**527232**
732	28,60	17,50	CT1	**525032**
737	38,10	27	CT1	**524940**
	44,50	33,40	CT4	**528269**
746	38,10	27	CT1	**524853**
	39,70	28,60	CT4	**528270**
755	34,90	23,80	CT1	**524217**
	38,10	27	CT1	**524218**
755,70	38,10	27	CT1	**524973**
764	28,60	17,50	CT1	**525033**
787	31,80	20,70	CT1	**525212**
800	31,80	20,70	CT1	**528210**
806	31,80	20,70	CT1	**526715**
818	31,80	20,70	CT1	**525034**
819,20	31,80	20,70	CT1	**524294**
822,30	31,80	20,70	CT1	**593949**
825	28,60	17,50	CT1	**594785**
	31,80	20,70	CT1	**524367**
840	31,80	20,70	CT1	**526867**
856	31,80	20,70	CT1	**524219**

Dimensions			Design	Designation
Seal seat diameter d_1	Seal fitted width B_1	Seal seat width b_1		
mm			–	–
876	38,10	27	CT1	**523063**
889	31,80	20,70	CT1	**524220**
900	31,80	20,70	CT1	**524221**
902	38,10	27	CT1	**524222**
914	28,60	17,50	CT1	**528416**
	30,20	19,10	CT1	**524223**
	38,10	27	CT1	**524224**
914,40	28,60	17,50	CT1	**593606**
	31,80	20,70	CT1	**530466**
929	28,60	17,50	CT1	**593285**
	75,20	64,10	CT4	**594202**
937	34,90	23,80	CT1	**523154**
940	38,10	27	CT1	**525320**
943	31,80	20,70	CT1	**524768**
946	31,80	20,70	CT1	**524368**
949	31,80	20,70	CT1	**526246**
952	31,80	20,70	CT1	**526582**
962	31,80	20,70	CT1	**524225**
965	31,80	20,70	CT1	**524226**
1 003	28,60	17,50	CT1	**529452**
	31,80	20,70	CT1	**526806**
1 013	34,90	23,80	CT1	**523584**
	36,50	25,40	CT1	**529379**
1 016	36,50	25,40	CT1	**525035**
	38,10	27	CT1	**527903**
1 018	54,80	43,70	CT4	**530396**
1 022	31,80	20,70	CT1	**525426**
1 029	38,10	27	CT1	**528532**
1 038	38,10	27	CT1	**525633**
1 041	38,10	27	CT1	**524227**
1 045	38,10	27	CT1	**525036**
1 051	33,40	22,30	CT1	**530448**
1 054	31,80	20,70	CT1	**527474**
	38,10	27	CT1	**524228**
1 064	41,30	30,20	CT4	**528272**
1 066	63,50	52,40	CT4	**528271**
1 066,90	38,10	27	CT4	**594494**
1 080	28,60	17,50	CT1	**523133**

Axial clamp seals – CT1 and CT4 – metric dimensions (converted from inch dimensions)
d_1 **1 101,70 – 4 142** mm

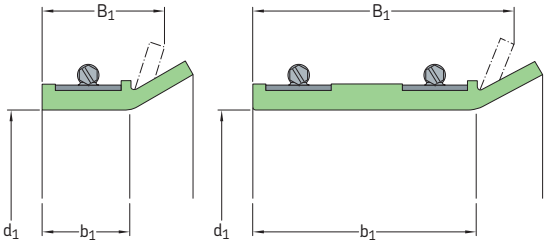

CT1 CT4

See **table 1**, **page 473** for application tolerances.

Dimensions Seal seat diameter d_1	Seal fitted width B_1	Seal seat width b_1	**Design**	**Designation**
mm			–	–
1 101,70	31,80	20,70	CT1	**524909**
1 105	38,10	27	CT1	**524369**
1 118	31,80	20,70	CT1	**524370**
	34,90	23,80	CT1	**528415**
	38,10	27	CT1	**524229**
	38,10	27	CT1	**593180**
	44,50	33,40	CT4	**528002**
	44,50	33,40	CT4	**528273**
1 140	38,10	27	CT1	**522676**
1 181	31,80	20,70	CT1	**529086**
1 193,80	38,10	27	CT1	**527211**
1 206	31,80	27	CT1	**525091**
	34,90	23,80	CT1	**526021**
	38,10	27	CT1	**524230**
1 206,50	30,20	19,10	CT1	**530606**
1 210	38,10	27	CT1	**522677**
1 225	38,10	27	CT1	**524231**
1 241	38,10	27	CT1	**524371**
1 245	31,80	20,70	CT1	**522828**
1 270	34,90	23,80	CT1	**529129**
1 286	31,80	20,70	CT1	**525953**
1 302	34,90	23,80	CT1	**529130**
1 308	31,80	20,70	CT1	**524372**
	34,90	23,80	CT1	**530661**
	38,10	27	CT1	**524232**

Dimensions Seal seat diameter d_1	Seal fitted width B_1	Seal seat width b_1	**Design**	**Designation**
mm			–	–
1 321	38,10	27	CT1	**528927**
1 346	31,80	20,70	CT1	**528526**
1 397	31,80	20,70	CT1	**526807**
1 448	31,80	20,70	CT1	**528525**
1 497,60	41,30	30,20	CT4	**594163**
1 613	31,80	20,70	CT1	**526808**
1 721	31,80	20,70	CT1	**528975**
1 778	31,80	20,70	CT1	**526809**
1 803	31,80	20,70	CT1	**524373**
1 854	38,10	27	CT1	**531456**
1 924	31,80	20,70	CT1	**525092**
1 968	31,80	20,70	CT1	**529517**
2 540	38,10	27	CT1	**522856**
2 616	31,80	20,70	CT1	**594083**
4 142	31,80	20,70	CT1	**594682**

Axial clamp seals – CT1 and CT4 – inch dimensions
d_1 **6.614 – 29.016** in.

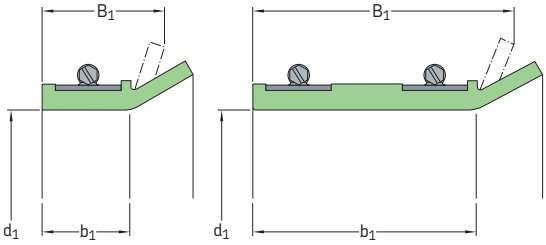

CT1 CT4

See **table 1**, **page 473** for application tolerances.

Dimensions Seal seat diameter d_1	Seal fitted width B_1	Seal seat width b_1	Design	Designation
in.			–	–
6.614	1.126	0.689	CT1	**594334**
6.626	1.126	0.689	CT1	**529489**
7.008	1.500	1.063	CT1	**523586**
7.284	1.181	0.744	CT1	**593637**
8.252	1.126	0.689	CT1	**527820**
8.622	1.126	0.689	CT1	**529490**
8.937	1.126	0.689	CT1	**531635**
9.000	1.126	0.689	CT1	**524204**
9.000	1.126	0.689	CT1	**527819**
9.016	1.142	0.705	CT1	**528631**
10.000	1.126	0.689	CT1	**524205**
10.000	1.126	0.689	CT1	**527806**
10.748	1.126	0.689	CT1	**594369**
11.024	1.126	0.689	CT1	**524206**
11.024	1.252	0.815	CT1	**524928**
11.748	1.126	0.689	CT1	**593629**
12.008	1.252	0.815	CT1	**524208**
12.008	1.500	1.063	CT1	**525582**
12.992	1.126	0.689	CT1	**524209**
12.992	1.500	1.063	CT1	**523587**
13.811	1.500	1.063	CT1	**594110**
14.000	1.500	1.063	CT1	**530733**
14.000	1.374	0.937	CT1	**593037**
14.961	1.500	1.063	CT1	**593171**
15.000	1.126	0.689	CT1	**594025**
15.236	1.126	0.689	CT1	**594954**
16.142	0.937	0.500	CT1	**595110**
16.260	3.500	3.063	CT4	**592934**
16.732	1.252	0.815	CT1	**523826**
16.732	1.315	0.878	CT1	**524815**
17.008	1.500	1.063	CT1	**528535**
17.500	1.374	0.937	CT1	**525737**
17.520	1.252	0.815	CT1	**522679**
17.520	1.374	0.937	CT1	**523547**
17.689	3.752	3.315	CT4	**528070**

Dimensions Seal seat diameter d_1	Seal fitted width B_1	Seal seat width b_1	Design	Designation
in.			–	–
18.504	1.126	0.689	CT1	**525708**
18.504	1.252	0.815	CT1	**526192**
19.488	1.126	0.689	CT1	**594181**
20.000	1.252	0.815	CT1	**524587**
20.984	1.260	0.823	CT1	**594241**
21.496	1.252	0.815	CT1	**524599**
21.496	3.752	3.315	CT4	**526741**
21.811	1.252	0.815	CT1	**524210**
21.929	1.126	0.689	CT1	**524211**
22.008	1.252	0.815	CT1	**524347**
22.500	1.252	0.815	CT1	**524212**
22.756	1.374	0.937	CT1	**524657**
23.386	1.374	0.937	CT1	**525627**
23.426	1.126	0.689	CT1	**525031**
23.504	1.374	0.937	CT1	**524364**
23.622	1.181	0.744	CT1	**594431**
23.740	1.252	0.815	CT1	**524365**
23.740	1.374	0.937	CT1	**523184**
23.740	1.811	1.374	CT4	**528651**
23.752	1.374	0.937	CT1	**525637**
23.752	1.811	1.374	CT4	**528267**
24.252	1.874	1.437	CT4	**529276**
24.764	1.252	0.815	CT1	**524213**
25.118	1.374	0.937	CT1	**524214**
25.787	1.575	1.138	CT4	**594784**
25.984	1.374	0.937	CT1	**524591**
26.929	1.126	0.689	CT1	**524215**
26.929	2.874	2.437	CT4	**593604**
27.244	1.374	0.937	CT1	**524592**
27.756	1.374	0.937	CT1	**524216**
27.756	2.374	1.937	CT4	**528268**
27.992	1.252	0.815	CT1	**527232**
28.819	1.126	0.689	CT1	**525032**
29.016	1.500	1.063	CT1	**524940**
29.016	1.752	1.315	CT4	**528269**

Axial clamp seals – CT1 and CT4 – inch dimensions
d_1 **29.370 – 163.071** in.

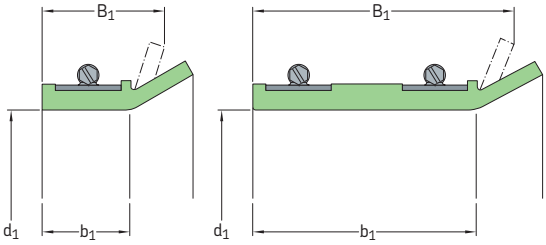

CT1 CT4

See **table 1**, **page 473** for application tolerances.

Dimensions			Design	Designation
Seal seat diameter d_1	Seal fitted width B_1	Seal seat width b_1		
in.			–	–
29.370	1.500	1.063	CT1	**524853**
29.370	1.563	1.126	CT4	**528270**
29.724	1.374	0.937	CT1	**524217**
29.724	1.500	1.063	CT1	**524218**
29.752	1.500	1.063	CT1	**524973**
30.079	1.126	0.689	CT1	**525033**
30.984	1.252	0.815	CT1	**525212**
31.496	1.252	0.815	CT1	**528210**
31.732	1.252	0.815	CT1	**526715**
32.205	1.252	0.815	CT1	**525034**
32.252	1.252	0.815	CT1	**524294**
32.374	1.252	0.815	CT1	**593949**
32.480	1.126	0.689	CT1	**594785**
32.480	1.252	0.815	CT1	**524367**
33.071	1.252	0.815	CT1	**526867**
33.701	1.252	0.815	CT1	**524219**
34.488	1.500	1.063	CT1	**523063**
35.000	1.252	0.815	CT1	**524220**
35.433	1.252	0.815	CT1	**524221**
35.512	1.500	1.063	CT1	**524222**
35.984	1.126	0.689	CT1	**528416**
35.984	1.189	0.752	CT1	**524223**
35.984	1.500	1.063	CT1	**524224**
36.000	1.126	0.689	CT1	**593606**
36.000	1.252	0.815	CT1	**530466**
36.575	1.126	0.689	CT1	**593285**
36.575	2.961	2.524	CT4	**594202**
36.890	1.374	0.937	CT1	**523154**
37.008	1.252	0.815	CT1	**526246**
37.008	1.500	1.063	CT1	**525320**
37.126	1.252	0.815	CT1	**524768**
37.244	1.252	0.815	CT1	**524368**
37.480	1.252	0.815	CT1	**526582**
37.874	1.252	0.815	CT1	**524225**
37.992	1.252	0.815	CT1	**524226**

Dimensions			Design	Designation
Seal seat diameter d_1	Seal fitted width B_1	Seal seat width b_1		
in.			–	–
39.488	1.126	0.689	CT1	**529452**
39.488	1.252	0.815	CT1	**526806**
39.882	1.374	0.937	CT1	**523584**
39.882	1.437	1.000	CT1	**529379**
40.000	1.437	1.000	CT1	**525035**
40.000	1.500	1.063	CT1	**527903**
40.079	2.156	1.721	CT4	**530396**
40.236	1.252	0.815	CT1	**525426**
40.512	1.500	1.063	CT1	**528532**
40.866	1.500	1.063	CT1	**525633**
40.984	1.500	1.063	CT1	**524227**
41.142	1.500	1.063	CT1	**525036**
41.378	1.315	0.878	CT1	**530448**
41.496	1.252	0.815	CT1	**527474**
41.496	1.500	1.063	CT1	**524228**
41.890	1.626	1.189	CT4	**528272**
41.968	2.500	2.063	CT4	**528271**
42.004	1.500	1.063	CT4	**594494**
42.520	1.126	0.689	CT1	**523133**
43.374	1.252	0.815	CT1	**524909**
43.504	1.500	1.063	CT1	**524369**
44.016	1.252	0.815	CT1	**524370**
44.016	1.374	0.937	CT1	**528415**
44.016	1.500	1.063	CT1	**524229**
44.016	1.500	1.063	CT1	**593180**
44.016	1.752	1.315	CT4	**528002**
44.016	1.752	1.315	CT4	**528273**
44.882	1.500	1.063	CT1	**522676**
46.496	1.252	0.815	CT1	**529086**
47.000	1.500	1.063	CT1	**527211**
47.480	1.252	1.063	CT1	**525091**
47.480	1.374	0.937	CT1	**526021**
47.480	1.500	1.063	CT1	**524230**
47.500	1.189	0.752	CT1	**530606**
47.638	1.500	1.063	CT1	**522677**

Dimensions			Design	Designation
Seal seat diameter d_1	Seal fitted width B_1	Seal seat width b_1		
in.			–	–
48.228	1.500	1.063	CT1	**524231**
48.858	1.500	1.063	CT1	**524371**
49.016	1.252	0.815	CT1	**522828**
50.000	1.374	0.937	CT1	**529129**
50.630	1.252	0.815	CT1	**525953**
51.260	1.374	0.937	CT1	**529130**
51.496	1.252	0.815	CT1	**524372**
51.496	1.374	0.937	CT1	**530661**
51.496	1.500	1.063	CT1	**524232**
52.008	1.500	1.063	CT1	**528927**
52.992	1.252	0.815	CT1	**528526**
55.000	1.252	0.815	CT1	**526807**
57.008	1.252	0.815	CT1	**528525**
58.606	1.626	1.189	CT4	**594163**
63.504	1.252	0.815	CT1	**526808**
67.756	1.252	0.815	CT1	**528975**
70.000	1.252	0.815	CT1	**526809**
70.984	1.252	0.815	CT1	**524373**
72.992	1.500	1.063	CT1	**531456**
75.748	1.252	0.815	CT1	**525092**
77.480	1.252	0.815	CT1	**529517**
100.00	1.500	1.063	CT1	**522856**
102.992	1.252	0.815	CT1	**594083**
163.071	1.252	0.815	CT1	**594082**
163.071	1.252	0.815	CT1	**594082**

Product index

Design	Product group	Product table	Page
CRS1	Radial shaft seal	2.5	167
CRSA1	Radial shaft seal	2.5	167
CRSH1	Radial shaft seal	2.5	167
CRSHA1	Radial shaft seal	2.5	168
CRW1	Radial shaft seal	2.2	105
CRW5	Radial shaft seal	2.3	161
CRWA1	Radial shaft seal	2.2	105
CRWA5	Radial shaft seal	2.3	161
CRWH1	Radial shaft seal	2.2	113
CRWHA1	Radial shaft seal	2.2	113
CT1	Axial clamp seal	8.1	468
CT4	Axial clamp seal	8.1	468
DL	Radial shaft seal	*	174
DLA	Radial shaft seal	*	174
HDDF	Metal face seal	6.1	384
HDL	Radial shaft seal	2.10	226
HDS1	Radial shaft seal	2.11	242
HDS1K	Radial shaft seal	2.12	258
HDS2K	Radial shaft seal	2.13	260
HDS2	Radial shaft seal	2.11	242
HDS3	Radial shaft seal	2.11	243
HDS7	Radial shaft seal	2.8	216
HDS7K	Radial shaft seal	2.9	222
HDSA1	Radial shaft seal	2.15	264
HDSA2	Radial shaft seal	2.15	264
HDSB1	Radial shaft seal	2.15	264
HDSB2	Radial shaft seal	2.15	264
HDSD1	Radial shaft seal	2.17	272
HDSD2	Radial shaft seal	2.17	272
HDSE1	Radial shaft seal	2.16	270
HDSE2	Radial shaft seal	2.17	272
HDSF1	Radial shaft seal	2.14	263
HDSF2	Radial shaft seal	2.14	262
HDSF7	Radial shaft seal	2.14	262
HDSH7	Radial shaft seal	2.14	262
HDW1	Radial shaft seal	2.4	165
HM1	Radial shaft seal	2.6	179
HM102	Radial shaft seal	2.6	179
HM11	Radial shaft seal	2.6	187
HM12	Radial shaft seal	2.6	191
HM14	Radial shaft seal	2.6	179
HM18	Radial shaft seal	2.6	185
HM21	Radial shaft seal	2.6	183
HM3	Radial shaft seal	2.6	179
HM4	Radial shaft seal	2.6	179
HM8	Radial shaft seal	2.6	182
HMA10	Radial shaft seal	2.6	179
HMA11	Radial shaft seal	2.6	186
HMA14	Radial shaft seal	2.6	182
HMA21	Radial shaft seal	2.6	191

* Product table not available. Contact SKF for more information.

Design	Product group	Product table	Page
HMA22	Radial shaft seal	2.6	181
HMA6	Radial shaft seal	2.6	183
HMA76	Radial shaft seal	2.6	180
HMA8	Radial shaft seal	2.6	181
HMA85	Radial shaft seal	2.6	181
HMA94	Radial shaft seal	2.6	189
HMA96	Radial shaft seal	2.6	191
HMS5	Radial shaft seal	2.1	94
HMSA10	Radial shaft seal	2.1	94
HS4	Radial shaft seal	2.24	302
HS5	Radial shaft seal	2.24	302
HS6	Radial shaft seal	2.25	306
HS7	Radial shaft seal	2.25	306
HS8	Radial shaft seal	2.25	306
HSF1	Radial shaft seal	2.19	276
HSF2	Radial shaft seal	2.20	290
HSF3	Radial shaft seal	2.21	292
HSF4	Radial shaft seal	2.22	298
HSF5	Radial shaft seal	2.19	276
HSF6	Radial shaft seal	2.20	290
HSF7	Radial shaft seal	2.21	292
HSF8	Radial shaft seal	2.22	298
HSF9	Radial shaft seal	2.23	300
LDSLV3	Wear sleeve	4.2	360
LDSLV4	Wear sleeve	4.2	360
MUD1	Cassette seal	*	322
MUD2	Cassette seal	*	322
MUD3	Cassette seal	*	322
MUD4	Cassette seal	*	322
MUD5	Cassette seal	*	322
MUD6	Cassette seal	*	322
MUD7	Cassette seal	*	322
MVR1	V-ring seal	7.3	466
MVR2	V-ring seal	7.4	468
SBF	Radial shaft seal	2.18	282
SKF Speedi-Sleeve	Wear sleeve	4.1	342
SL	Radial shaft seal	*	174
SLA	Radial shaft seal	*	174
SLS	Radial shaft seal	*	174
SLX	Radial shaft seal	*	174
TL1	Radial shaft seal	2.6	190
TL4	Radial shaft seal	2.6	190
TL5	Radial shaft seal	2.6	190
TL6	Radial shaft seal	2.6	192
TL7	Radial shaft seal	2.6	187
TL8	Radial shaft seal	2.6	186
TP	Track pin seal	5.1	376
TPM	Track pin seal	5.1	376
VR1	V-ring seal	7.1	400
VR2	V-ring seal	7.1	400
VR3	V-ring seal	7.1	403
VR4	V-ring seal	7.1	405
VR6	V-ring seal	7.1	405
VA	V-ring seal	7.2	428
VE	V-ring seal	7.2	433
VL	V-ring seal	7.2	431
VS	V-ring seal	7.2	428
VRME	V-ring seal	7.2	433
X1	Radial shaft seal	2.7	193
X12	Radial shaft seal	2.7	193
X13	Radial shaft seal	2.7	193
X14	Radial shaft seal	2.7	194
X15	Radial shaft seal	2.7	193
X2	Radial shaft seal	2.7	193

* Product table not available. Contact SKF for more information.

Design	Product group	Product table	Page
X4	Radial shaft seal	2.7	193
XH15	Radial shaft seal	2.7	193
YNSLE	Radial shaft seal	*	174
YSL	Radial shaft seal	*	174
YSLE	Radial shaft seal	*	174

* Product table not available. Contact SKF for more information.



www.skf.com/seals