# Profile rail guides
# LLT

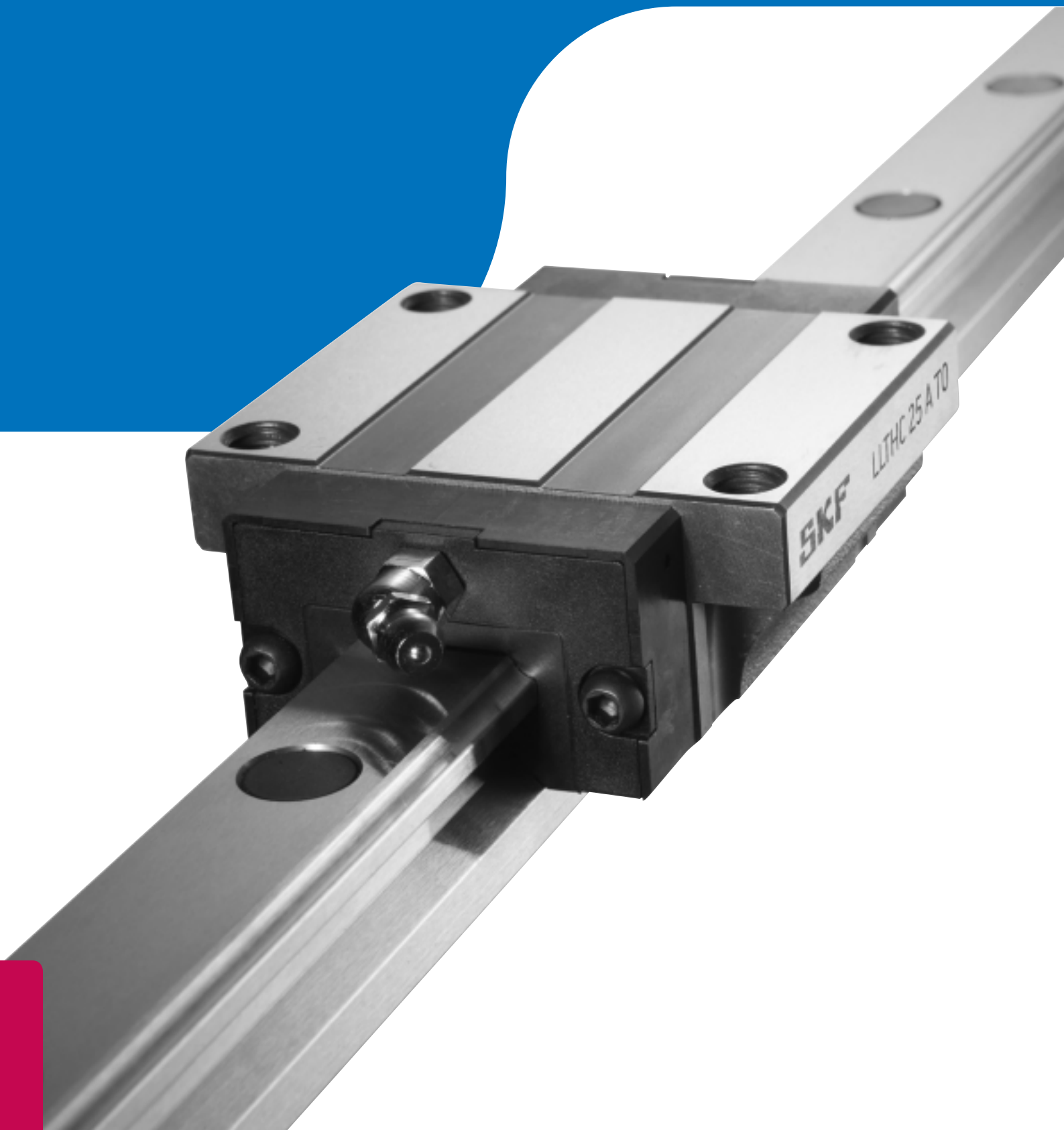

# Contents


**SKF – the knowledge engineering company** . . . . . **4**

## A Product information

**Foreword** . . . . . **6**
Features and benefits . . . . . 7
Basic design . . . . . 8
Load rating . . . . . 9
Definition of the basic static load rating $C_0$ . . . . . 9
Verification and validation . . . . . 9
Rigidity . . . . . 10
Permissible operating conditions . . . . . 11
Dynamic values . . . . . 11
Required minimum load . . . . . 11
Permissible maximum load . . . . . 11
Standstill . . . . . 11
Permissible operating temperatures . 11
Friction . . . . . 12
Lubrication . . . . . 13
Grease lubrication . . . . . 13
Base oil viscosity . . . . . 13
Consistency class . . . . . 13
Temperature range . . . . . 13
Corrosion inhibiting additives in lubricants . . . . . 13
SKF bearing greases . . . . . 13
Factory pre-lubrication . . . . . 14
Initial lubrication . . . . . 14
Re-lubrication . . . . . 14
Short stroke applications . . . . . 15
Central lubricating systems . . . . . 15
Calculation bases . . . . . 16
Static safety factor . . . . . 16
Basic rating life $L_{10}$ . . . . . 16
Basic rating life at constant speed . . . 16
Basic rating life at varying speeds . . . 16
Preload classes . . . . . 17
Preload and rigidity . . . . . 17
Applying a preload . . . . . 17
Constant mean load . . . . . 18
External bearing load at combined bearing loads . . . . . 18
Static bearing load . . . . . 18
Combined static bearing load . . . . . 18
Dynamic bearing load . . . . . 19
Combined dynamic bearing load . . . . 19
Factors of influence . . . . . 20
Requisite reliability . . . . . 20
Operating conditions . . . . . 20
Load conditions . . . . . 21
Number of carriages per rail . . . . . 21
Impact of stroke length . . . . . 21
Modified basic rating life . . . . . 21
Legend . . . . . 22
SKF calculation program . . . . . 24
Product overview . . . . . 25
LLT components and material specifications . . . . . 26
Standard carriage components . . . . . 27
Seals . . . . . 27
Accuracy classes . . . . . 28
Accuracy . . . . . 28
Width and height accuracy . . . . . 28
Parallelism . . . . . 28
Combination of rails and carriages . . 28
Ordering key system . . . . . 29
Ordering key carriages . . . . . 30
Ordering key bellows . . . . . 30
Ordering key rail . . . . . 31
Ordering key accessories (delivered separately) . . . . . 31

## B Product data

**Product data** . . . . . **32**
Carriages . . . . . 32
Rails . . . . . 33
LLTHR rails . . . . . 33
LLTHR ... D4 rails . . . . . 33
LLTHR ... D6 rails . . . . . 33
Carriage LLTHC ... SA . . . . . 34
Carriage LLTHC ... A . . . . . 36
Carriage LLTHC ... LA . . . . . 38
Carriage LLTHC ... SU . . . . . 40
Carriage LLTHC ... U . . . . . 42
Carriage LLTHC ... LU . . . . . 44
Carriage LLTHC ... R . . . . . 46
Carriage LLTHC ... LR . . . . . 48
LLTHR rails . . . . . 50
LLTHR ... D4 rails . . . . . 52
LLTHR ... D6 rails . . . . . 54
Jointed rail tracks . . . . . 56
**Accessories** . . . . . **58**
Scraper plate . . . . . 59
Additional front seal . . . . . 60
Seal kit . . . . . 61
Adapter plate . . . . . 62
Lubrication connector . . . . . 63
Bellows . . . . . 64
Temperature resistance . . . . . 64
Material . . . . . 64
Bellows kit contents . . . . . 64
Mounting . . . . . 65
Calculation of the bellows type 2 . . . . 65
Calculation of the rail length . . . . . 65
Applications in corrosive environment . . . . . 66

## C Recommendations

**Mounting and maintenance** . . . . . **67**
General instructions . . . . . 67
Typical mounting examples . . . . . 67
Rails . . . . . 67
Carriage . . . . . 67
Interface design, screw sizes and tightening torques . . . . . 68
Position tolerances of attachment holes . . . . . 69
Permissible height deviation . . . . . 70
Parallelism . . . . . 71
Maintenance . . . . . 71

**Typical application areas** . . . . . **72**

## D Additional information

Specification sheet . . . . . 73

# SKF – the knowledge engineering company






From one simple but inspired solution to a misalignment problem in a textile mill in Sweden, and fifteen employees in 1907, SKF has grown to become a global industrial knowledge leader.
Over the years we have built on our expertise in bearings, extending it to seals, mechatronics, services and lubrication systems. Our knowledge network includes 46 000 employees, 15 000 distributor partners, offices in more than 130 countries, and a growing number of SKF Solution Factory sites around the world.

**Research and development**

We have hands-on experience in over forty industries, based on our employees' knowledge of real life conditions. In addition our world-leading experts and university partners who pioneer advanced theoretical research and development in areas including tribology, condition monitoring, asset management and bearing life theory. Our ongoing commitment to research and development helps us keep our customers at the forefront of their industries.

**Meeting the toughest challenges**

Our network of knowledge and experience along with our understanding of how our core technologies can be combined helps us create innovative solutions that meet the toughest of challenges. We work closely with our customers throughout the asset life cycle, helping them to profitably and responsibly grow their businesses.

**Working for a sustainable future**

Since 2005, SKF has worked to reduce the negative environmental impact from our own operations and those of our suppliers. Our continuing technology development introduced the SKF BeyondZero portfolio of products and services which improve efficiency and reduce energy losses, as well as enable new technologies harnessing wind, solar and ocean power. This combined approach helps reduce the environmental impact both in our own operations and in our customers'.

*SKF Solution Factory makes SKF knowledge and manufacturing expertise available locally, to provide unique solutions and services to our customers.*




*Working with SKF IT and logistics systems and application experts, SKF Authorized Distributors deliver a valuable mix of product and application knowledge to customers worldwide.*



# Our knowledge – your success

***SKF Life Cycle Management is how we combine our technology platforms and advanced services, and apply them at each stage of the asset life cycle, to help our customers to be more successful, sustainable and profitable.***

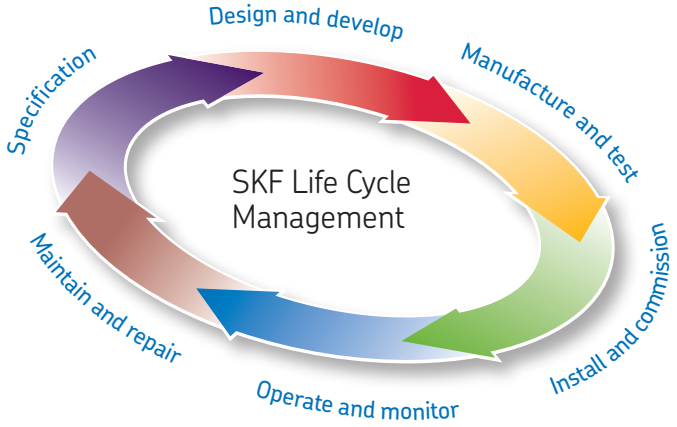


### Working closely with you

Our objective is to help our customers improve productivity, minimize maintenance, achieve higher energy and resource efficiency, and optimize designs for long service life and reliability.

### Innovative solutions

Whether the application is linear or rotary or a combination of the two, SKF engineers can work with you at each stage of the asset life cycle to improve machine performance by looking at the entire application. This approach doesn't just focus on individual components like bearings or seals. It looks at the whole application to see how each component interacts with the next.

### Design optimization and verification

SKF can work with you to optimize current or new designs with proprietary 3-D modeling software that can also be used as a virtual test rig to confirm the integrity of the design.



***Bearings***
*SKF is the world leader in the design, development and manufacture of high performance rolling bearings, plain bearings, bearing units and housings.*



***Machinery maintenance***
*Condition monitoring technologies and maintenance services from SKF can help minimize unplanned downtime, improve operational efficiency and reduce maintenance costs.*



***Sealing solutions***
*SKF offers standard seals and custom engineered sealing solutions to increase uptime, improve machine reliability, reduce friction and power losses, and extend lubricant life.*



***Mechatronics***
*SKF fly-by-wire systems for aircraft and drive-by-wire systems for off-road, agricultural and forklift applications replace heavy, grease or oil consuming mechanical and hydraulic systems.*



***Lubrication solutions***
*From specialized lubricants to state-of-the-art lubrication systems and lubrication management services, lubrication solutions from SKF can help to reduce lubrication related downtime and lubricant consumption.*



***Actuation and motion control***
*With a wide assortment of products – from actuators and ball screws to profile rail guides – SKF can work with you to solve your most pressing linear system challenges.*

# Foreword

The productivity and economic success of a given application depends, to a large extent, on the quality of the selected linear components. Often these components determine market acceptance and thus help to obtain a competitive edge for the manufacturer. To do this, the linear components have to be as adaptable as possible to precisely meet the application's requirements, ideally with standard components.

The SKF profile rail guide series LLT satisfies these market demands: available in a wide range of sizes, carriages and accessories as well as in various preload and accuracy classes, LLT profile rail guides facilitate adaptation to individual application demands. In combination with their ability to operate at virtually unlimited stroke, this opens up almost any design option.

The range of possible applications include material handling, plastic injection moulding, woodworking, printing, packaging and medical devices, to name only a few. In these types of applications, the design of the LLT reveals its full capabilities.

SKF manufactures LLT profile rail guides in an X-arrangement with a 45° contact angle between the rolling elements and raceways. This design promotes equal load sharing in all four main load directions to provide greater design flexibility. Moreover, deviations in parallelism and height, which usually occur in multi-axis systems, can be compensated for more efficiently, resulting in reliable and smooth operation under a variety of operating conditions.

In addition, SKF offers a miniature profile rail guide series and a series of ready assembled and driven profile rail guide slides. Contact your SKF representative for additional information.



# Features and benefits

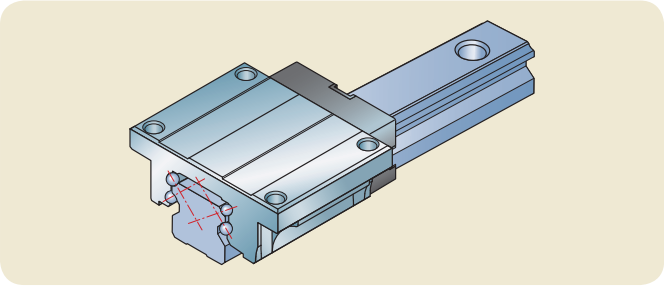

***Improved running performance***
*The LLT profile rail guide has four rows of balls with a 45° contact angle between the rolling elements and raceways. This X-arrangement improves the system's self-aligning capability. Mounting deviations can be accommodated even under preload, resulting in smooth running performance. Friction is kept to a minimum due to two-point ball contact. This enables reliable, stick-slip-free operation for the life of the rail guide.*

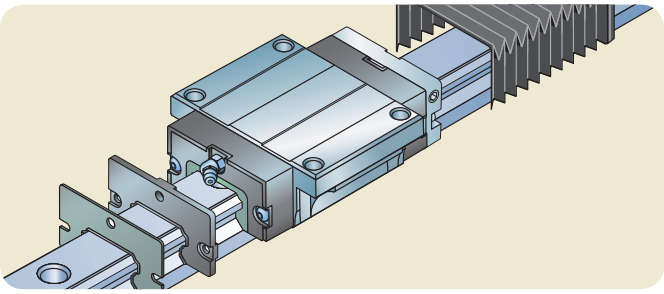

***Modular concept for customized solutions***
*Applications have different speed, precision and environmental requirements. As a result, SKF LLT rail guides use modular components so that cost-effective solutions can be built based on the needs of the application. Various accuracy and preload classes are available to meet different precision and rigidity requirements. Furthermore, a wide range of accessories supports its adaptation to specific environmental needs.*

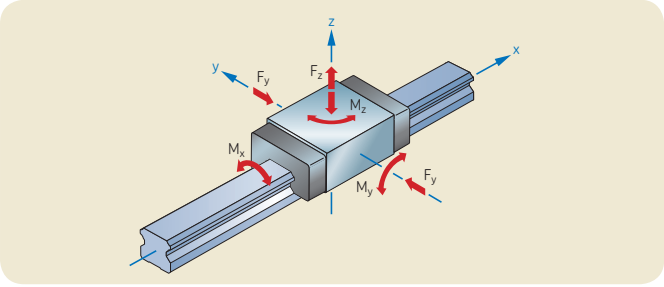


***Rigidity, strength and accuracy for improved production processes***
*The four-row arrangement of balls at a 45° angle optimizes load sharing in all four main load directions and is in accordance with ISO 14728. This feature provides a high degree of design flexibility. The ability to accommodate high loads and moment loads makes these rail guides ideal even for single carriage systems.*

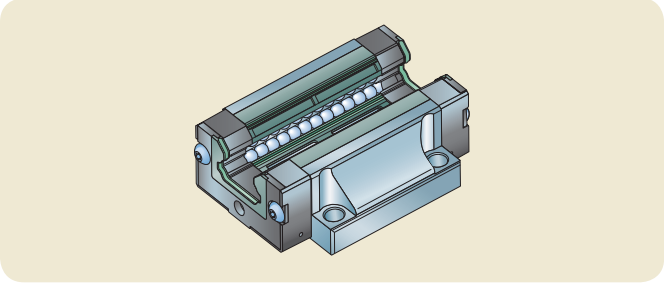

***Longer service life and reduced maintenance***
*SKF profile rail guide carriages are pre-lubricated at the factory.. The integrated lubricant reservoirs, located in the end plates, constantly relubricate the circulating balls. Both ends of the carriage have threaded metal lubrication ports to accommodate an automatic re-lubrication system. One grease nipple is provided as standard with each carriage. These fully sealed carriages have double lip seals on both ends as well as side and inner seals. The low-friction seals are highly effective against the ingress of contaminants.*

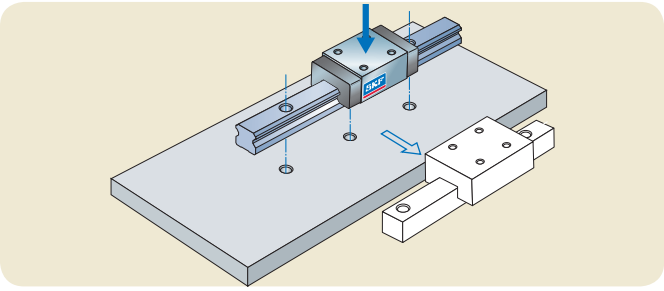

***Interchangeability and global availability***
*The main dimensions of SKF profile rail guides are in accordance with ISO 12090-1. This enables dimensional interchangeability with all ISO-compliant brands. SKF's global sales and distribution network results in availability of replacement parts and serviceability for all systems worldwide.*

# Basic design

Just as with rotary bearings, the raceways of profile rail guides can be arranged in an X- or O-configuration. The technical characteristics of these two arrangements are essentially the same. Therefore, there are no basic differences in behaviour in the vast majority of load situations, except when they are subjected to moment loads around the x-axis.

The Profile rail guides from SKF feature an X-arrangement, based on the contact angle of the rolling elements (→ **fig. 1**). The advantage of this arrangement is that deviations in parallelism and height, which usually appear in multi-axes systems, can be accommodated more effectively (→ **fig. 2**).

Due to the design-related smaller lever arm, the X-arrangement provides better self-aligning capability.

In combination with a two-point contact of the rolling elements, running friction is kept to a minimum. This results in a smooth and stick-slip-free operation of the guidance system.

**Fig. 1**

**Schematic illustration of the different ball-arrangements**

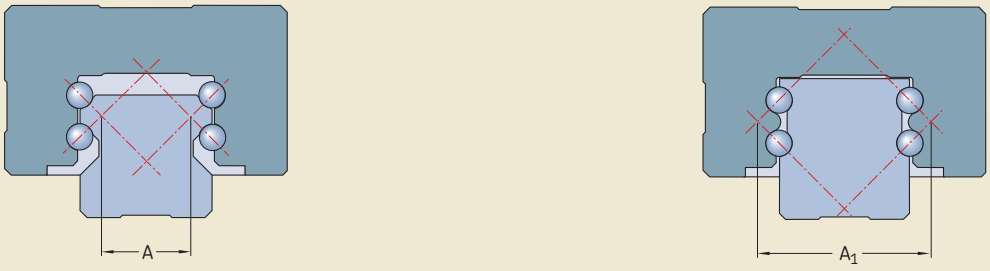


X-arrangement O-arrangement

**Fig. 2**

**Self-aligning capability in comparison**

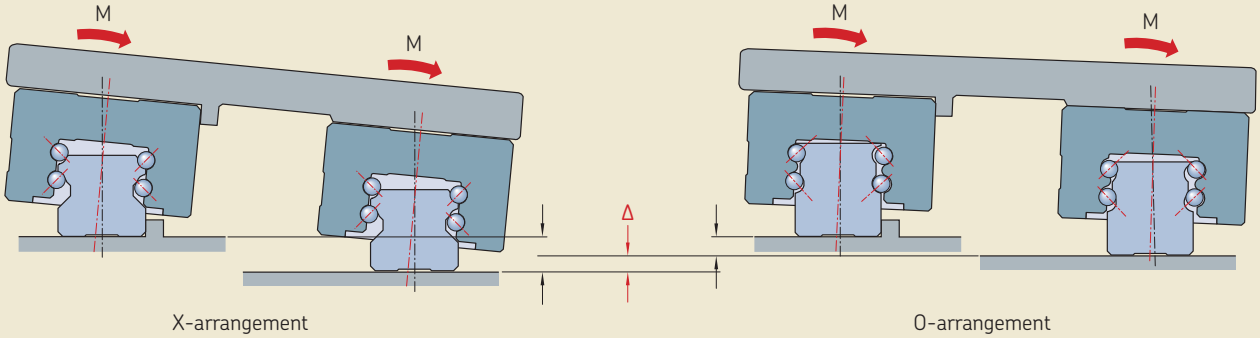


X-arrangement O-arrangement

# Load rating

## Definition of the basic dynamic load rating C

The basic dynamic load rating C is the radial load, constant in magnitude and direction, which a linear rolling bearing can theoretically accommodate for a basic rating life represented by a travelled distance of 100 km (according to ISO 14728 Part 1).

**Note:** As per ISO 14728 Part 1, it is also permissible a reference a distance of 50 km travelled. In this case, a conversion factor of 1,26 should be applied in order to enable proper comparison of the two load rating values. (→ **formula 1**)

(**1**) $$C_{100} = \frac{C_{50}}{1,26}$$

## Definition of the basic static load rating $C_0$

The basic static load rating $C_0$ is the static load in the direction of loading which corresponds to a calculated stress at the centre of the most heavily loaded contact point between the rolling element and each of the raceways of carriage and rail.

**Note:** This stress produces a permanent total deformation of the rolling element and the raceway which corresponds to about 0,0001 times the rolling element diameter (according to ISO 14728 Part 2).

## Verification and validation

The load ratings stated in this catalogue have been calculated for all product types based on the standards cited. The calculation model prescribed in the standards has been complemented and verified by SKF through internal simulations.

Since it is not economically feasible to test the load ratings of all catalogue types in practice, SKF carries out standardized durability examinations at regular intervals by means of selected reference sizes. These tests provide statistical evidence and documentation that the theoretically ascertained load ratings are valid under standardized practical test conditions.

In many cases, this SKF internal validation process saves the customer intensive field tests and offers high reliability for LLT profile rail guide designs.

Only in cases where the operating conditions are not known, as well as in cases where these conditions are more exacting than usual, are customers advised to conduct further field tests.

In practice, it is a common approach to integrate results and experiences of existing and proven designs in new designs and apply them to new applications. When using LLT profile rail guides, it also makes sense for customers to build on previous application experience in the continuous development of their applications.

# Rigidity

The rigidity of LLT profile rail guides, in addition to their load carrying capacity, is one of the most important criteria in product selection. Rigidity can be defined as the deformation characteristics of a guidance system under external load. The rigidity of a system depends on the magnitude and direction of the external load, the type of guidance system (size, carriage type, preload) and the mechanical properties of the adjacent support structure. Usually, this load is indicated, including magnitude and direction, on the point of load application of the mounted guidance system.

Rigidity values, which only take deflection of the rolling elements into consideration, can deviate considerably under realistic conditions due to the elasticity of the support structure, the screw connections and the joints between components. Therefore, the overall rigidity at the bearing point is, as a rule, lower than that of the actual guidance system.

The different sizes and types of LLT profile rail guides feature significant differences in their deformation behaviour. The diagrams represent only the deformation values for a single reference size. These values are measured on properly mounted LLTHS 25 rail guides bolted to well-prepared support surfaces. The loads were applied symmetrically between the load carrying raceways.

Rigidity values for other types of LLT profile rail guides are available on request.

Furthermore, the type and size of the carriage has an impact on rigidity due to the geometrical differences.

**Diagram 1** shows the deformation behaviour of an LLT profile rail guide based on the selected carriage type in one load direction. It represents the behaviour of three different size 25 carriage types with standard length under vertical pushing load in an identical mounting situation.

**Deformation behaviour in the three main load directions for symmetrical loading**

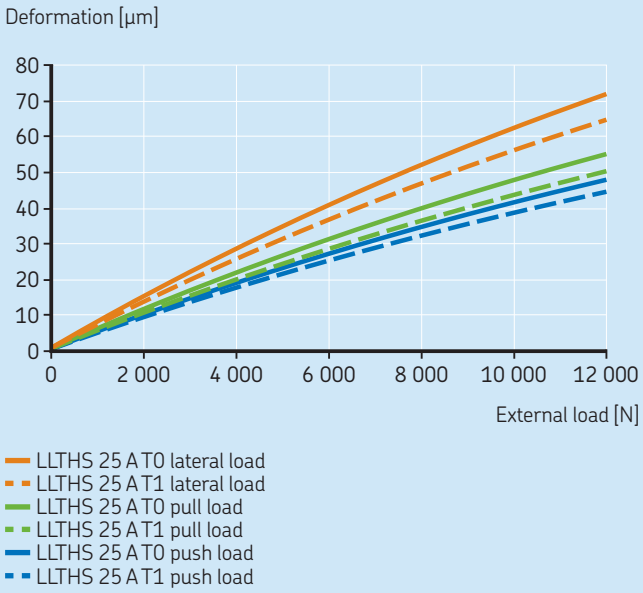


**Diagram 1**

**Deformation behaviour of size 25 under vertical pushing load, with three different carriages**

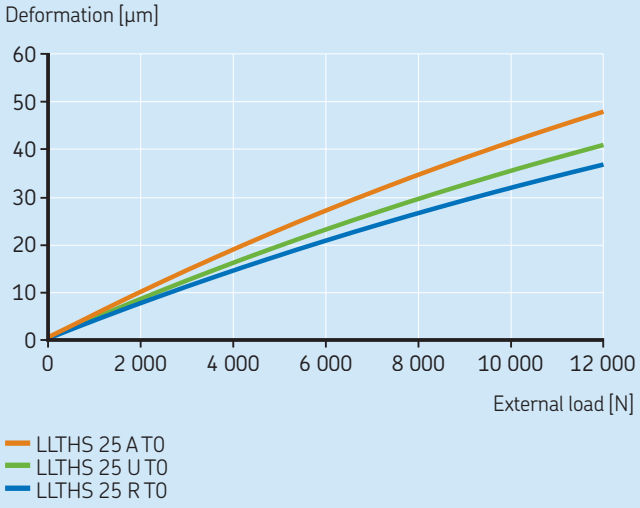

# Permissible operating conditions

The function of LLT profile rail guides can be realized only if there are no deviations from the specified operating conditions. The formulae and life values stated in the chapter *Calculation bases* (→ **page 16**) are valid only if the operating conditions described in the following are adhered to.

## Dynamic values

LLT profile rail guides can reach a maximum speed of $v_{max}$ = 5 m/s.

The maximum acceleration is $a_{max}$ = 75 m/s$^2$ (for preloaded systems).

## Required minimum load

To prevent the balls from sliding in the load zone during operation at higher speed, the carriage must be under a minimum load at all times. A value of about 2% of the dynamic load rating can be used as a guideline. This is particularly important for applications that are characterized by highly dynamic cycles. LLT profile rail guides in the T1 preload class are typically able to satisfy minimum load requirements.

## Permissible maximum load

When selecting an LLT profile rail guide, the dynamic and static load ratings are key factors in this process.

For example, the dynamic bearing load during operation must not exceed 50% of the dynamic load rating. To calculate the dynamic bearing load, **see page 16**).

Exceeding the dynamic load ratings in operation results in a deviation of the usual load distribution, and can significantly reduce bearing service life. A statistical evaluation according to Weibull is not reliable in these cases.

As stated in ISO 14728 Part 2, the maximum load should not exceed 50% of the static load rating.

## Standstill

When external forces create vibrations in a stationary LLT profile rail guide, surface damage due to micro-movements between the balls and raceways may occur. This can increase noise levels during dynamic operation and reduce system service life.

To avoid this type of damage, the guides should be isolated from external vibration and mechanically unloaded for transport purposes.

## Permissible operating temperatures

The permissible temperature range for LLT profile rail guides is:

| | |
|---|---|
| Continuous operation: | –20 to +80 °C |
| Short-term: | max. 100 °C |

This temperature range is determined by the synthetic materials used for the ball retainers, recirculation devices and seals.

The time limit for the permissible maximum temperature is dependent on the actual operating conditions. Low speed (< 0,2 m/s), slightly loaded (P < 15% C) or stationary applications can be exposed to an ambient temperature < 100 °C for up to one hour. Design measures like heat shielding can extend this period.

Be sure to check that the temperature limits of the lubricant can withstand elevated temperatures prior to use.

# Friction

In addition to the external operating load, the friction in a guidance system is determined by a number of other factors. For example, the preload class, external loads, speed of travel and viscosity of the lubricant should be taken into consideration.

The displacement resistance is determined by the proportions of rolling and sliding friction generated by the rolling elements in the contact zone. Also, the recirculation geometry as well as the lubricant have an influence.

The effect of the lubricant depends on its characteristics, quantity and condition.

A running-in phase provides a better distribution of the lubricant in the carriage, and therefore reduces friction.

The operating temperature of the guidance system also influences friction. Higher temperatures reduce the viscosity of the lubricant.

Another factor is the sliding friction of the front and longitudinal seals in contact with the profile rail guide. The friction generated by the seals will, however, decrease after the running-in phase.

The friction can be reduced to a minimum when carriages with low friction S0 shields from size 15 to 30 are used. Due to the reduced sealing ability of these shields, these carriages should only be considered for applications in clean environments.

Moreover, the mounting accuracy of the rails relative to each other plays an important part, just like the flatness of the saddle plates as well as attachment structure for rail tracks connected to the guides.

The coefficient of friction for lubricated profile rail guides is typically between $\mu = 0{,}003$ and 0,005. Lower values should be selected for higher loads, and higher values for lower loads. The friction values of the seals must be added to these values and can be made available upon request.

# Lubrication

The appropriate type and amount of lubricant is required for rolling bearings to function reliably. To reduce wear, the lubricant prevents direct metal-to-metal contact between the rolling elements and the raceways. In addition, the lubricant protects the carriage from corrosion.

The guidance system can only realize its optimum operating temperature when a minimum amount of lubricant to reliably lubricate the profile rail guide is applied.

## Grease lubrication

Under normal operating conditions, LLT profile rail guides should be lubricated with grease. The advantage of grease is that it is more easily retained in the bearing, which is particularly important when the axis of travel is inclined or vertical. Moreover, it contributes to sealing the bearing against the ingress of liquid contaminants or humidity.

## Base oil viscosity

The viscosity of a lubricating oil is key to the formation of the hydrodynamic film that separates the rolling elements from the raceways.

In general, the viscosity of lubricating oils is based on the flow rate at 40 °C. These values also apply to the mineral base oils contained in lubricating greases.

The base oils of commercially available rolling bearing greases have viscosity values between 15 and 500 $mm^2/s$ (at 40 °C). Greases with higher base oil viscosities often release too slowly to sufficiently lubricate bearings.

## Consistency class

Lubricating greases are divided into various consistency classes according to a scale by the National Institute of Grease Lubrication (NLGI). These are also reflected in DIN 51 818 and DIN 51 825.

Greases with a metallic soap thickener with a consistency of 2 or 3 on the NLGI scale are particularly suitable for use with SKF profile rail guides. The grease consistency should not vary too much with changing operating temperatures or stress levels. Greases that soften at higher temperatures can leak from the bearing position, while greases that get stiffer at lower temperatures can impede the operation of the linear guidance system.

Specific requirements are placed on the lubricating grease's purity, composition and compatibility if the grease is to be used in special applications, for instance in the food sector, medical engineering, etc. In such cases, criteria should be further specified for the lubricant in addition to viscosity and consistency class.

## Temperature range

The temperature range over which a lubricant can be used depends largely on the type of base oil and thickener as well as the additives.

The low temperature limit, the lowest temperature at which the grease enables the bearing to be started up without difficulty, is largely determined by the type of base oil and its viscosity. The high temperature limit is determined by the type of thickener and its dropping point. The dropping point is the temperature at which a grease changes its consistency and becomes a fluid.

Note that grease will age with increasing rapidity at higher operating temperatures. The resulting by-products have a detrimental effect on the grease's lubrication properties and conditions in the rolling contact zone.

Lubricating greases with synthetic base oils can be used both at higher and lower temperatures than lubricants with a mineral oil base.

## Corrosion inhibiting additives in lubricants

Lubricants typically contain additives to inhibit corrosion. In addition, the type of thickener is crucially important in this regard.

Lithium-base and calcium-soap greases provide excellent corrosion protection properties. They are also resistant to water wash-out.

In applications where corrosion protection is a key operational parameter, SKF recommends coated LLT profile rail guides and a grease with a good rust preservative (→ **page 64**).

## SKF bearing greases

The assortment of SKF greases has been developed based on the latest information about rolling bearing lubrication and has undergone extensive testing both in the laboratory and under field conditions. SKF continuously monitors the quality of its greases prior to use or sale.

**Table 1** lists those SKF greases that are particularly well-suited for LLT profile rail guides. Additional information and special lubricant recommendations are available from SKF upon request.

**Note:** Tests have shown that SKF LGEP 2 grease will perform satisfactorily in the majority of applications.

**Table 1**

**A selection of SKF rolling bearing greases**

| Properties | Lubricant (designation) | | | |
|---|---|---|---|---|
| | LGEP 2 | LGMT 2 | LGLT 2 | LGFP 2 |
| Thickener | Li | Li | Li | Al complex soap |
| Base oil | Mineral oil | Mineral oil | Di-ester oil | Medical white oil |
| Operating temperature, °C (steady state) | –20 up to +110 | –30 up to +120 | –55 up to +110 | –20 up to +110 |
| Kinematic viscosity of base oil | 200 | 110 | 15 | 130 |
| Consistency class (acc. to NLGI) | 2 | 2 | 2 | 2 |
| Temperature range / Application range | EP grease | normal | low | food compatible |

## Factory pre-lubrication

LLT carriages are normally supplied pre-lubricated with SKF LGEP 2 grease. The technical data for this grease can be found in **table 1**. A preservative is applied to the LLT rails and carriages to protect them during transport, storage and mounting. When using the recommended lubricants, it is not necessary to remove this preservative.

**Note:** In addition, there are unlubricated carriages available on request that are completely protected with a preservative. These carriages must be greased by the customer.

## Initial lubrication

Initial lubrication is not required since SKF profile rail guides are delivered pre-greased and ready to install unless specified otherwise. In cases where a different type of grease is required, the carriages should be thoroughly cleaned and regreased prior to mounting. Alternatively, the carriages can be ordered without grease. Please refer to **table 2** for appropriate grease quantity.

This initial grease fill should be applied three times according to the steps below:

1. Grease each carriage according to the quantities listed (→ **table 2**).
2. Move the carriage three times backwards and forwards with stroke = carriage length.
3. Repeat steps **1** and **2**, twice more.
4. Check if a lubricating film is visible on the rail.

## Re-lubrication

The lubrication intervals for profile rail guides depend primarily on the average running speed, operating temperature and grease quality.

The intervals recommended for fixed operating conditions are listed in **table 3**. For appropriate grease quantity refer to **table 2**. Where contamination, use of coolants, vibration, shock loads etc. form part of the environmental conditions, it is advisable to reduce relubrication intervals accordingly.

**Note:** For $F_m$ determination, please use **formula 10** to calculate constant mean load described on **page 18**. Also, consider recommended lubrication intervals in **table 3**.

**Table 2**

| **Size** | **Grease quantity**<br>Carriage type<br>A, U, R | LA, LU, LR | SA, SU |
|---|---|---|---|
| – | $cm^3$ | | |
| **15** | 0,4 | – | 0,3 |
| **20** | 0,7 | 0,9 | 0,6 |
| **25** | 1,4 | 1,8 | 1,1 |
| **30** | 2,2 | 2,9 | 1,8 |
| **35** | 2,2 | 2,9 | 1,8 |
| **45** | 4,7 | 6,1 | – |

**Table 3**

| **Size** | **Lubrication intervals**[1)]<br>Under normal operating conditions, v ≤ 1 m/s<br>Travel under load<br>$F_m \leq 0{,}15\ C$ | $F_m \leq 0{,}3\ C$ |
|---|---|---|
| – | km | – |
| **15** | 5 000 | 1 200 |
| **20** | 5 000 | 1 200 |
| **25** | 10 000 | 2 400 |
| **30** | 10 000 | 2 400 |
| **35** | 10 000 | 2 400 |
| **45** | 10 000 | 2 400 |

[1)] NLGI 00 grease reduces the relubrication intervals to 75% of the stated values

## Short stroke applications

If the stroke is less than twice the carriage length, both lube ports must be used, each filled equally with the grease quantity stated for initial lubrication or relubrication.

**Example**

- Short stroke application
- Carriage type A
- Size 25

Apply 3 × 1,4 $cm^3$ into the left and
3 × 1,4 $cm^3$ into the right grease nipple.

**Important:** To avoid serious damage to the rail guides, it is important to consider the miscibility of greases when changing from one lubricant to another.

Moreover, you must also consider the possibility of reduced relubrication intervals when performing at a short stroke operation and reduced load carrying capacity as well as the possibility of chemical interaction with synthetic materials, lubricants and preservatives.

Please refer to the grease manufacturer's instructions. In case of incompatibility between lubricants employed, the carriages should be thoroughly cleaned before re-greasing.

## Central lubrication systems

If the application features a central lubrication system using greases with a consistency of 2 or higher on the NLGI scale, contact SKF.

For automatic relubrication systems from SKF, please contact your local SKF representative.

# Calculation bases

The calculation methods described in this chapter must take into account all actual loads and forces acting on the individual bearings.

## Static safety factor

The static safety factor is expressed as the relationship between the static load rating and the maximum static bearing load including preload (→ **page 17**). The load conditions (→ **page 21**) acting on the guidance system during operation must also be taken into account. The static safety factor indicates the level of safety against permanent plastic deformation of the rolling elements and raceways and is calculated according to **formula 2**.

(**2**) $$s_0 = \frac{C_0}{P_0} = \frac{C_0}{f_d\, F_{res\,max}}$$

where
$C_0$ = static load rating [N]
$f_d$ = factor for load conditions
$F_{resmax}$ = maximum resulting load [N]
$P_0$ = maximum static load [N]
$s_0$ = static safety factor

Based on practical experience, guideline values have been specified for the static safety factor, which depend on the operating mode and other external factors. See **table 4**.

If, for example, the guidance system is exposed to external vibrations from machinery in close proximity, higher safety factors should be applied. Moreover, the load transfer paths between a profile rail guide and its support structure should be taken into account. In particular, the bolted connections must be examined for sufficient safety. See also chapter *Mounting and Maintenance* (→ **page 67**). For overhead installations of LLT profile rail guides, higher safety factors should be applied.

**Note:** For combined external static bearing loads, the maximum resulting load $F_{res,\,max}$ should be calculated based on an external bearing load F determined according to chapter *Combined static bearing load*, **page 18.**

**Note:** The general technical rules and standards in the respective industrial sector must also be observed.

## Basic rating life $L_{10}$

Under controlled laboratory conditions, seemingly identical bearings operating under identical conditions have different individual endurance lives. A clearer definition of the term "bearing life" is therefore essential to calculate bearing size.

**Important:** All information presented by SKF with regard to load ratings is based on the life that 90% of a sufficiently large group of apparently identical bearings can be expected to attain or exceed.

## Basic rating life at constant speed

If the speed is constant, the basic rating life, $L_{10s}$ or $L_{10h}$, can be calculated using **formulas 3** and **5**:

(**3**) $$L_{10s} = \left(\frac{C}{P}\right)^3 100$$

(**4**) $$P = \frac{f_d}{f_i} F_{res}$$

(**5**) $$L_{10h} = \frac{5 \times 10^7}{l_s\, n\, 60} \left(\frac{C}{P}\right)^3$$

where
C = dynamic load rating [N]
$f_d$ = factor for load conditions
$f_i$ = factor for number of carriages per rail
$F_{res}$ = resulting load [N]
$L_{10h}$ = basic rating life [h]
$L_{10s}$ = basic rating life [km]
n = stroke frequency [double strokes/min]
P = equivalent dynamic load [N]
$l_s$ = single stroke length [mm]

## Basic rating life at varying speeds

In applications where there are varying speeds, the mean speed must be calculated (**7**). With this value, it is possible to calculate the basic rating life at varying speeds (**6**).

(**6**) $$L_{10h} = \frac{100\, L_{10s}}{6\, v_m}$$

(**7**) $$v_m = \frac{t_1\, v_1 + t_2\, v_2 + \ldots + t_n\, v_n}{100\%}$$

where
$L_{10h}$ = basic rating life [h]
$L_{10s}$ = basic rating life [km]
$t_1, t_2 \ldots t_n$ = time proportions for $v_1, v_2 \ldots v_n$ [%]
$v_m$ = mean speed [m/min]
$v_1, v_2 \ldots v_n$ = speed [m/min]

**Table 4**

**Static safety factor depending on operating conditions**

| Operating conditions | $s_0$ |
|---|---|
| Normal conditions | min. 2 |
| Smooth, vibration-free operation | >2–4 |
| Medium vibrations or impact loads | 3–5 |
| High vibrations or impact loads | >5 |
| Overhead installations | The general technical rules and standards in the respective industrial sector must be observed. And if the application poses a risk of serious injury, the user must take appropriate design and safety measures that will prevent the carriage from becoming detached from the rail (e.g. due to loss of rolling elements or failure of screw connections). |

# Preload classes

## Preload and rigidity

To adjust a profile rail guide to the specific requirements of a given application, it is advisable to choose an appropriate preload. Preload can enhance the performance of an entire linear guidance system and increase the rigidity of the carriage under load.

## Applying a preload

Preload is determined by the diameter of the balls and increases with larger diameters.

SKF LLT profile rail guides are available in different preload classes. For additional information, refer to **table 5**.

For information about what preload classes are typically applied to different applications, see the chapter *Typical application areas* (→ **page 72**).

Depending on the external bearing load and preload class, the resulting load has to be calculated according to the following methodology to get the impact on the life of profile rail guides.

Load case 1

$F \leq 2{,}8\ F_{Pr}$ ($F_{Pr}$ → **table 5**)

**(8)** $$F_{res} = \left(\frac{F}{2{,}8\ F_{pr}} + 1\right)^{1,5} F_{pr}$$

Load case 2

$F > 2{,}8\ F_{Pr}$ ($F_{Pr}$ → **table 5**)

**(9)** $F_{res} = F$

where

$F$ = external bearing load [N]
$F_{Pr}$ = preload force [N]
$F_{res}$ = resulting load [N]

**Table 5**

**Determining preload values according to preload class**

| Preload class | Preload force $F_{Pr}$ |
|---|---|
| **T0** | **Zero to light preload**<br>For extremely smooth-running profile rail guide systems requiring low friction. This preload class is only available in P5 and P3 accuracy classes. |
| **T1** | **$F_{Pr}$ = 2% of C**<br>For precise profile rail guide systems with low and medium external loads and a high degree of rigidity. |
| **T2** | **$F_{Pr}$ = 8% of C**<br>For precise profile rail guide systems with high external load and high requirements for overall rigidity. Also recommended for single-rail systems. Additional common moment loads are absorbed without any significant elastic deformation. |

**Generation of preload**

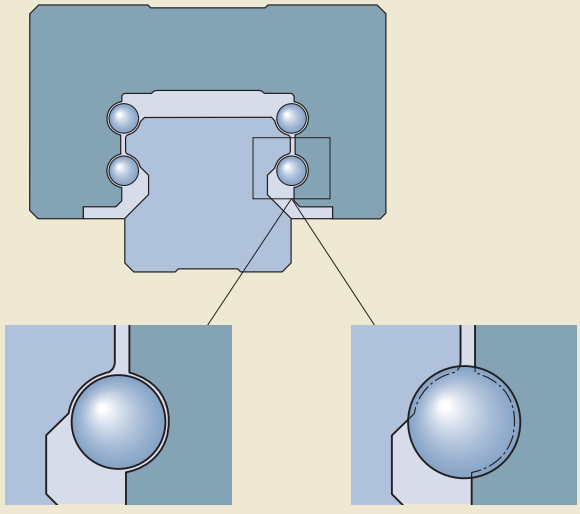

System without preload

Preloaded system with oversized balls

# Constant mean load

In operation, it is not uncommon for variable time- or travel-related load conditions to occur. To calculate the basic rating life under these conditions, the constant mean load must be determined.

If the external bearing load is composed of forces of varying magnitudes, but constant during the individual stroke lengths as shown in **fig. 3**, or if a continuously varying load can be replaced approximately by an individual force, the constant mean load $F_m$ can be calculated using **formulas 10** and **11**.

**(10)** $$F_m = \sqrt[3]{\frac{\sum_{i=1}^{n} |F_{res_i}^3| \, s_i}{s_{tot}}}$$

**(11)** $$s_{tot} = s_1 + s_2 + \ldots + s_n$$

where

$F_m$ = constant mean load [N]
$F_{res1}$, $F_{res2}$ ... $F_{resn}$ = resulting load during stroke length $s_1$, $s_2$ ... $s_n$ [N]
$s_{tot}$ = total stroke length [mm]

## External bearing load at combined bearing loads

The following chapter starting on **page XX** describes the method to calculate the external bearing load with possible combinations of external forces and moments. All load components must be constant in magnitude to enable their calculation as one load event.

If one of the load proportions varies significantly in magnitude over the length of the stroke, a separate load case must be calculated according to the same method. In this case, $F_m$, should be calculated as described below.

**Note:** As for the following four calculation routines, an external load, acting on the carriage at any angle, must be broken down into the proportions $F_y$ and $F_z$. These proportions are then inserted into the respective formula.

## Static bearing load

For external static vertical and horizontal loads, the external bearing load F can be calculated using **formula 12** (→ **fig. 4**).

**Formula 12** applies to a system with two rails and four carriages (no torque loads can occur).

**(12)** $$F = |F_y| + |F_z|$$

where

F = external bearing load [N]
$F_y$, $F_z$ = external bearing loads in y- and z-direction [N]

## Combined static bearing load

For combined external static bearing loads – both vertical and horizontal – in combination with static moments, the external bearing load F can be calculated using **formula 13** (→ **fig. 5**).

**(13)** $$F = |F_y| + |F_z| + C_0 \left( \left| \frac{M_x}{M_{xC_0}} \right| + \left| \frac{M_y}{M_{yC_0}} \right| + \left| \frac{M_z}{M_{zC_0}} \right| \right)$$

where

$C_0$ = static load rating [N]
F = external bearing load [N]
$F_y$, $F_z$ = external bearing loads in y- and z-direction [N]
$M_x$, $M_y$, $M_z$ = moment loads at respective coordinates [Nm]
$M_{xC_0}$, $M_{yC_0}$, $M_{zC_0}$ = permissible static moment loads [Nm]

**Formula 13** can be used for the following systems:

- One rail with one carriage (all types of moment loads can occur)
- Two rails with one carriage each ($M_x$ cannot occur)
- One rail with two carriages ($M_y$, $M_z$ cannot occur)

**Note:** The maximum value of F is required for calculating the static safety factor $s_0$. To this end, all loads must be calculated for the individual stroke lengths. With these figures, the maximum resulting load $F_{res\ max}$ can be calculated and then inserted in the equation for $s_0$.

**Fig. 3**

**Variable load acting on a carriage**

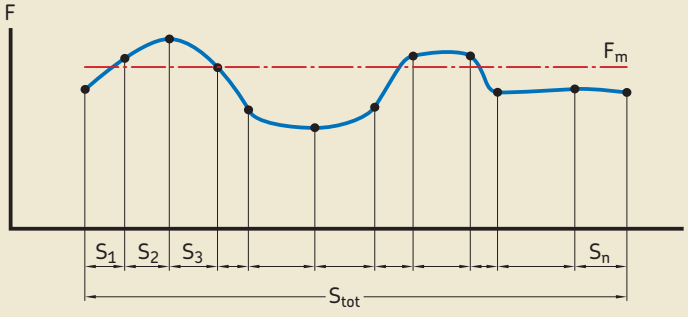


**Fig. 4**

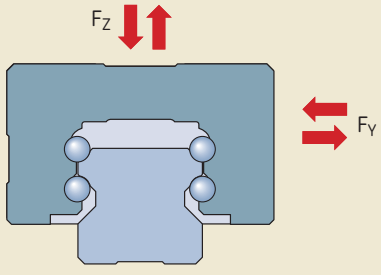

## Dynamic bearing load

For external loads – both vertical and horizontal (→ **fig. 4**) – the external bearing load F is calculated by means of **formula 14**. **Formula 14** applies to a system with two rails and four carriages.

(**14**) $F = |F_y| + |F_z|$

where
$F$ = external bearing load [N]
$F_y$, $F_z$ = external bearing loads in y- and z-direction [N]

**Note:** The design of the profile rail guide permits this simplified calculation. If different load stages exist for $F_y$ and $F_z$, then $F_y$ and $F_z$ must be considered individually in **formula 10**.

## Combined dynamic bearing load

When combined external dynamic bearing loads and dynamic moments are present, the external bearing load F can be calculated using **formula 15** (**fig. 5**).

(**15**) $$F = |F_y| + |F_z| + C\left(\left|\frac{M_x}{M_{xC}}\right| + \left|\frac{M_y}{M_{yC}}\right| + \left|\frac{M_z}{M_{zC}}\right|\right)$$

where
$C$ = dynamic load rating [N]
$F$ = external bearing load [N]
$F_y$, $F_z$ = external bearing loads in y- and z-direction [N]
$M_x$, $M_y$, $M_z$ = moment loads at respective coordinates [Nm]
$M_{xC}$, $M_{yC}$, $M_{zC}$ = permissible dynamic moment loads [Nm]

**Formula 15** can be used for the following systems:

- One rail with one carriage (all types of moment loads can occur)
- Two rails with one carriage each ($M_x$ cannot occur)
- One rail with two carriages ($M_y$, $M_z$ cannot occur)

**Fig. 5**

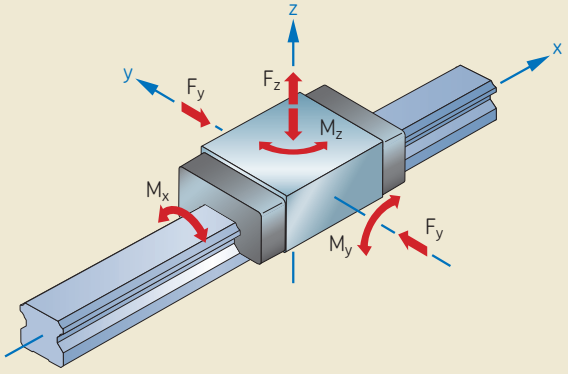

# Factors of influence

## Requisite reliability

Factor $c_1$ is used for lifetime calculations where a reliability higher than 90% is needed. The corresponding values can be found in (→ **table 6**).

Table 6

**Factor $c_1$ for reliability**

| Reliability % | $L_{ns}$ | $c_1$ |
|---|---|---|
| 90 | $L_{10s}$ | 1 |
| 95 | $L_{5s}$ | 0,62 |
| 96 | $L_{4s}$ | 0,53 |
| 97 | $L_{3s}$ | 0,44 |
| 98 | $L_{2s}$ | 0,33 |
| 99 | $L_{1s}$ | 0,21 |

## Operating conditions

The lubrication effectiveness is strongly dependent on the degree of separation between the rolling elements and raceway surfaces in the contact zones. A specific minimum viscosity is required for the formation of an effectively separating lubricating film at operating temperature, taking into account the kinematic conditions. Assuming a normal level of cleanliness of the profile rail guide as well as effective sealing, factor $c_2$ depends on the viscosity ratio κ exclusively. κ designates the ratio between the actual kinematic viscosity and the requisite minimum viscosity (→ **formula 16**).

**(16)** $$\kappa = \frac{\nu}{\nu_1}$$

where
κ = viscosity ratio
ν = actual kinematic viscosity [mm²/s]
$\nu_1$ = requisite minimum viscosity [mm²/s]

The requisite minimum viscosity $\nu_1$ for LLT guides depends on the mean speed (→ **Diagram 2**).

The value for $\nu_1$ can be related to the actual viscosity ν according to **formula 16** in order to obtain κ. Now $c_2$ can be taken from the following diagram (→ **diagram 3**). If the viscosity ratio κ is less than 1, a lubricant with EP additives is recommended. If lubricant with EP additives are used, the higher value for $c_2$ can be used for calculation.

Diagram 2

**Determining the requisite minimum viscosity $\nu_1$**

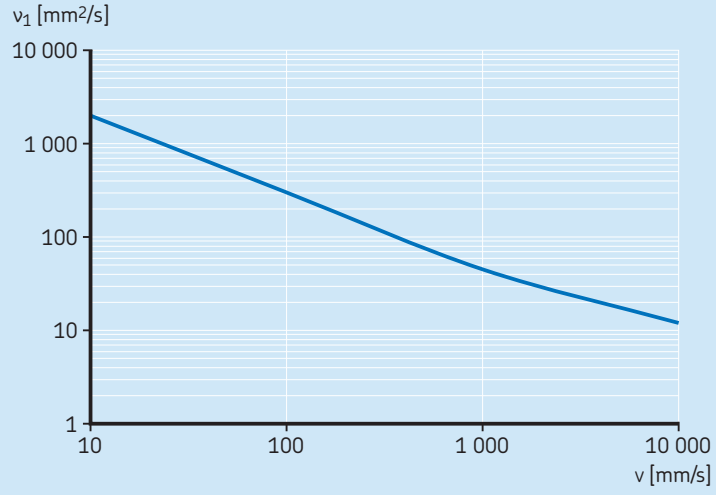


Diagram 3

**Determining factor $c_2$ for operating conditions**

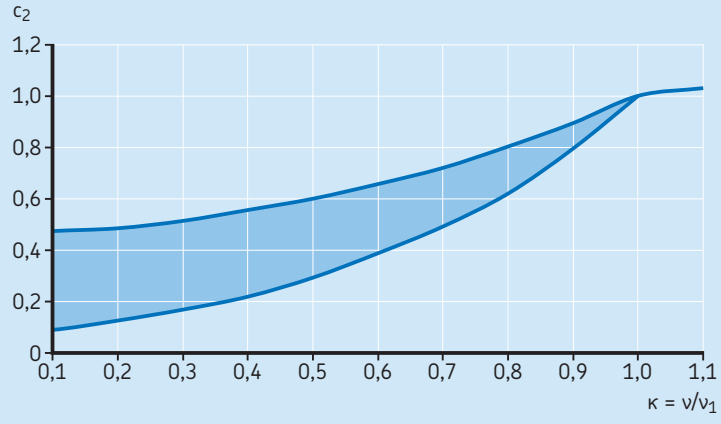

## Load conditions

The load acting on an LLT profile rail guide consists of the external and internal forces resulting from acceleration, impact loads and vibration. It is extremely difficult to quantify these additional dynamic forces. To approximate the impact these indeterminate loads will have on the life of the system, the load must be multiplied by factor $f_d$. Depending on the mean speed and strength of impact load, values listed in **table 7** can be selected for $f_d$.

## Number of carriages per rail

Most profile rail guide configurations feature two or more carriages mounted on one rail. The load distribution on these various carriages is strongly influenced by the mounting accuracy, the manufacturing quality of the adjacent components, and particularly, the distance between the carriages. Factor $f_i$ takes these influences on carriage loading into account based on the number of carriages per rail and their distance relative to each other (→ **table 8**).

## Impact of stroke length

Strokes that are shorter than the metal body of the carriage (dimension $L_2$) have a negative impact on the achievable life of a guidance system. Based on the ratio of the single stroke lengths $l_s$ relative to metal body of the carriage $L_2$, $l_s$, factor $f_s$ is determined according to **table 9**.

The single stroke length $l_s$ depends on the total stroke length (or cycle) and can be calculated according to the formula below (**16.1**):

(**16.1**) $$l_s = \frac{S_{tot}}{2}$$

If the stroke is longer than the carriage metal body length, the factor is $f_s = 1$.

# Modified basic rating life

If the load situation is known and the factors have been determined, then the modified basic rating life according to **formula 17** can be calculated using the formula below:

(**17**) $$L_{ns} = 100\, c_1\, c_2\, f_s \left( \frac{f_i\, C}{f_d\, F_{res}} \right)^3$$

In the presence of forces that vary with time, such as those described in chapter *Calculation bases*, **page 16**, **formula 17** above is extended as follows to take into account the impact of the operating conditions and loads per interval. This is described in **formula 18**:

(**18**) $$L_{ns} = 100\, c_1\, c_2\, f_s \left[ \frac{f_i\, C\, \sqrt[3]{s_{tot}}}{\sqrt[3]{\sum_{i=1}^{n} f_{di}^3 \left| F_{res,i}^3 \right| s_i}} \right]^3$$

where

$C$ = dynamic load rating [N]
$c_1$ = factor for reliability
$c_2$ = factor for operating conditions
$f_d$ = factor for load conditions
$f_{di}$ = load condition factor for load interval i
$f_i$ = factor for number of carriages per rail
$F_{res}$ = resulting load [N]
$F_{res,i}$ = resulting load during stroke length [N]
$f_s$ = factor for stroke length
$L_{ns}$ = modified basic rating life [km]
$l_s$ = single stroke length [mm]
$s_i$ = individual stroke length [mm]
$s_{tot}$ = total stroke length [mm]

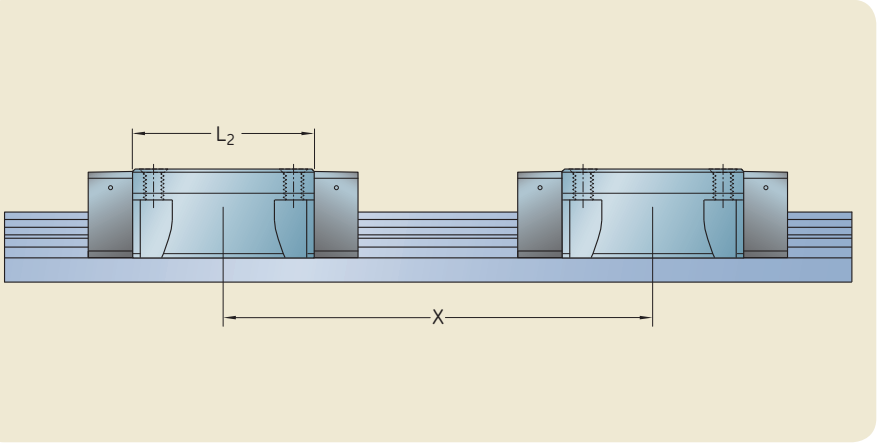


**Table 7**

**Factor $f_d$ for load conditions**

| Load conditions | $f_d$ from | up to |
|---|---|---|
| Smooth operation, no or light impact loads Speed ≤ 2 m/s | 1,0 | 1,5 |
| High impact loads Speed > 2 m/s | 1,5 | 3,0 |

**Table 8**

**Factor $f_i$ for number of carriages per rail**

| Number of carriages | If X ≥ 1,5*$L_2$ $f_i$ | If X < 1,5*$L_2$ $f_i$ |
|---|---|---|
| 1 | 1 | 1 |
| 2 | 1 | 0,81 |
| 3 | 1 | 0,72 |

**Table 9**

**Factor $f_s$ depending on the ratio $l_s/L_2$**

| $l_s/L_2$ | $f_S$ |
|---|---|
| 1,0 | 1,0 |
| 0,9 | 0,91 |
| 0,8 | 0,82 |
| 0,7 | 0,73 |
| 0,6 | 0,63 |
| 0,5 | 0,54 |
| 0,4 | 0,44 |
| 0,3 | 0,34 |
| 0,2 | 0,23 |

## Legend

| | | |
|---|---|---|
| $C$ | dynamic load capacity; also dynamic load rating | [N] |
| $C_0$ | static load capacity; also static load rating | [N] |
| $c_1$ | factor for reliability | |
| $c_2$ | factor for operating conditions | |
| $f_d$ | factor for load conditions | |
| $f_{d1}$, $f_{d2}$ ... $f_{dn}$ | factor for load conditions during stroke length $s_1$, $s_2$ ... $s_n$ | |
| $f_i$ | factor for number of carriages per rail | |
| $f_s$ | factor for stroke length | |
| $F$ | external bearing load | [N] |
| $F_y$, $F_z$ | external bearing loads in y- and z-direction | [N] |
| $F_{Pr}$ | preload force | [N] |
| $F_{res}$ | resulting load | [N] |
| $F_{res\,1}$, $F_{res\,2}$ ... $F_{res\,n}$ | resulting load during stroke length $s_1$, $s_2$, ..., $s_n$ | [N] |
| $F_{res\,max}$ | maximum resulting load | [N] |
| $F_m$ | constant mean load | [N] |
| $K$ | viscosity ratio | |
| $L_{10h}$ | basic rating life | [h] |
| $L_{10s}$ | basic rating life | [km] |
| $L_{ns}$ | modified basic rating life | [km] |
| $M_x$, $M_y$, $M_z$ | moment loads at respective coordinates | [Nm] |
| $M_{xC}$, $M_{yC}$, $M_{zC}$ | permissible dynamic moment loads | [Nm] |
| $M_{xC0}$, $M_{yC0}$, $M_{zC0}$ | permissible static moment loads | [Nm] |
| $n$ | stroke frequency | [double strokes/min] |
| $\nu$ | actual kinematic viscosity | [mm²/s] |
| $\nu_1$ | requisite minimum viscosity | [mm²/s] |
| $P$ | equivalent dynamic load | [N] |
| $P_0$ | maximum static load | [N] |
| $l_s$ | single stroke length | [mm] |
| $s_0$ | static safety factor | |
| $s_i$ | individual stroke length | [mm] |
| $s_{tot}$ | total stroke length | [mm] |
| $t_1$, $t_2$ ... $t_n$ | time proportions for $v_1$, $v_2$ ... $v_n$ | [%] |
| $v_1$, $v_2$ ... $v_n$ | speed | [m/min] |
| $v_m$ | mean speed | [m/min] |

5 [mm]

# SKF calculation program

Details pertaining to all the relevant load situations and the specification of the general design conditions are crucial for precisely calculating the life expectancy and static load safety of an LLT profile rail guide system in a specific application. Ultimately, this information determines the size and carriage type of the LLT profile rail guide. This design process can be quite extensive for complex applications. Therefore, SKF offers the "linear guide select" calculation program which is available at www.skf.com. This calculation program supports the user and is extremely effective in the design of LLT profile rail guide systems.

The following information must be available prior to starting a calculation:

- number of load cases
- moved masses as well as operating loads including coordinates
- travel proportions of operating loads
- reaction forces accommodated by the drive system (in the direction of travel)
- selection of preload applied to the guide
- layout (number of rails and carriages)
- geometry of linear axis (distance between rails relative to each other and carriages relative to each other)

**Note:** If the user is free to select the application coordinate system, SKF recommends using the coordinate system in the program. This facilitates the analysis of all operating loads and the resulting reaction forces in the carriages and prevents transformation errors.

### Representation of results

When the calculation routine is complete, the user will receive the following data in a clearly structured form:

- all input data
- load values per carriage in the y- and z-direction and external loads for all conceivable load cases
- calculation of equivalent dynamic load per carriage
- basic rating life of carriages
- static load safety of carriages

Depending on the expected life or static load safety, various carriage sizes can be selected for printout.

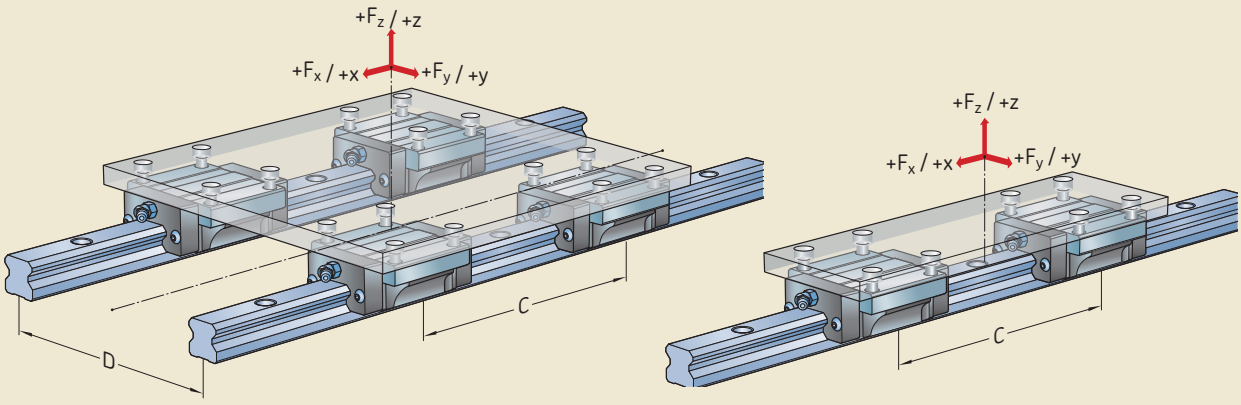

# Product overview

***LLTHC ... SA***
*Flanged carriage, short length, standard height*
*Further information on* ***page 34***



***LLTHC ... A***
*Flanged carriage, standard length, standard height*
*Further information on* ***page 36***



***LLTHC ... LA***
*Flanged carriage, extended length, standard height*
*Further information on* ***page 38***

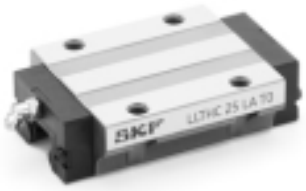

***LLTHC ... R***
*Slim-line carriage, standard length, extended height*
*Further information on* ***page 46***





***LLTHR profile rail with blind holes***
*Additional information on* ***page 52***



***LLTHR profile rail with standard holes***
*Additional information on* ***page 50***



***LLTHC ... LR***
*Slim-line carriage, extended length, extended height*
*Further information on* ***page 48***



***LLTHC ... SU***
*Slim-line carriage, short length, standard height*
*Further information on* ***page 40***



***LLTHC ... U***
*Slim-line carriage, standard length, standard height*
*Further information on* ***page 42***



***LLTHC ... LU***
*Slim-line carriage, extended length, standard height*
*Further information on* ***page 44***

## LLT components and material specifications

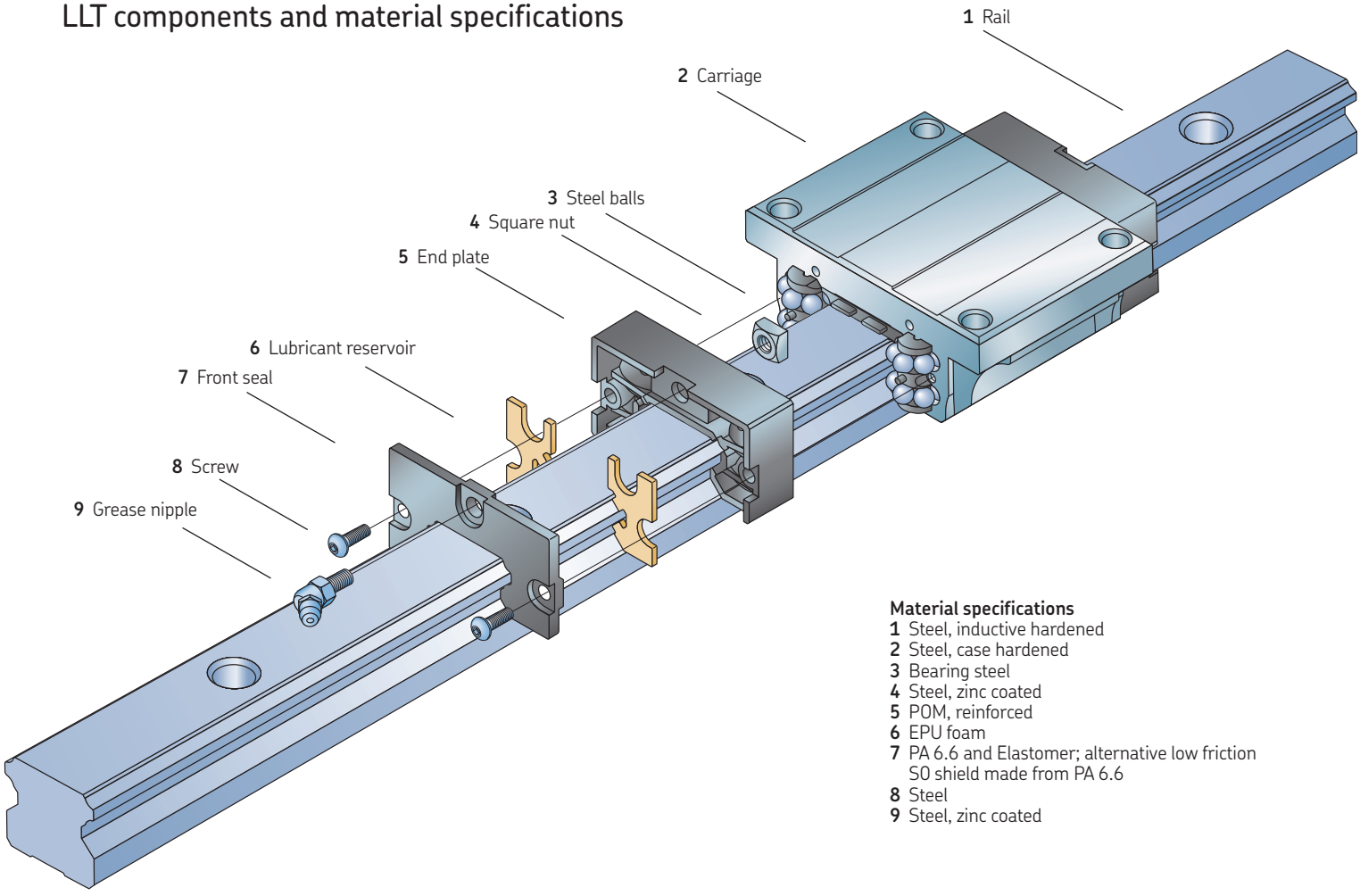


**Material specifications**
**1** Steel, inductive hardened
**2** Steel, case hardened
**3** Bearing steel
**4** Steel, zinc coated
**5** POM, reinforced
**6** EPU foam
**7** PA 6.6 and Elastomer; alternative low friction S0 shield made from PA 6.6
**8** Steel
**9** Steel, zinc coated

# Standard carriage components

## Seals

The ingress of dirt, swarf and liquids, as well as lubricant leakage can significantly reduce the service life of a profile rail guide system. SKF LLT profile rail guide carriages are therefore supplied with front, side and inner seals as standard, which can significantly extend service life.

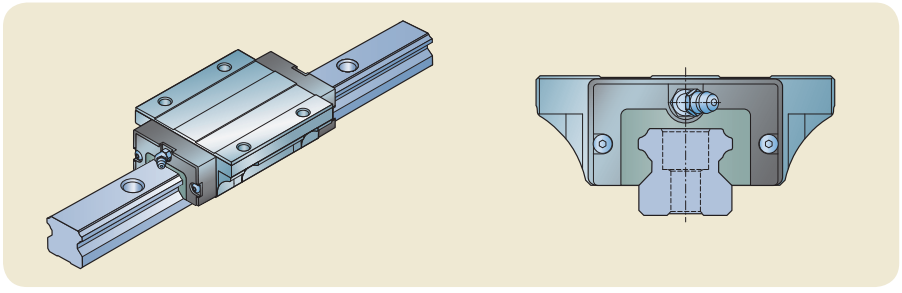

***Front seal***
*Front seals are especially important since they provide protection for the carriage in the direction of movement. They are designed as double-lip seals in order to provide improved wiping properties.*

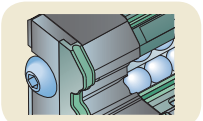

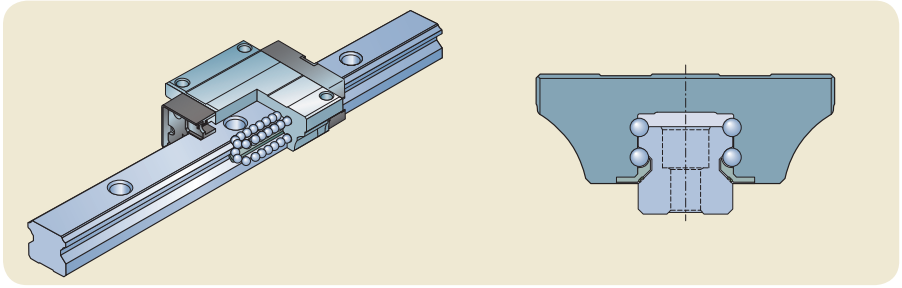

***Side seal***
*Side seals effectively prevent contaminants from working their way into the system from below. Seal design can deviate based on size.*

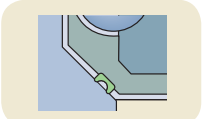

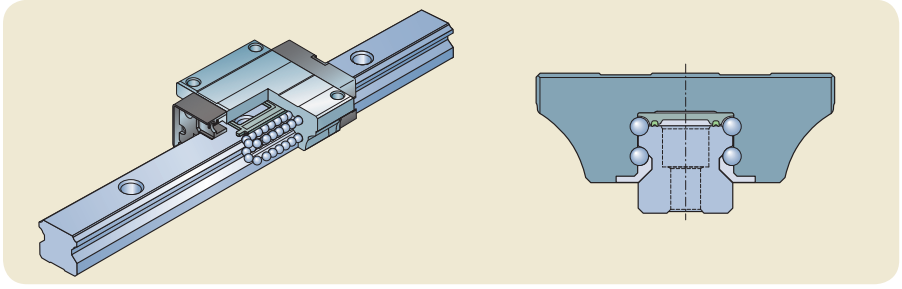

***Inner seal***
*Inner seals are an additional means of protection against lubricant leakage. Seal design can deviate based on size .*

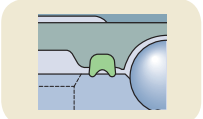

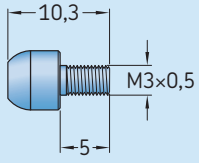


Design version for size 15

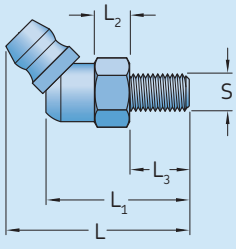


| Size | Dimension | | | | |
|---|---|---|---|---|---|
| | L | $L_1$ | $L_2$ | $L_3$ | S |
| – | mm | | | | |
| **20** | 24,6 | 19,2 | 4,72 | 8 | M5 |
| **25** | 24,6 | 19,2 | 4,72 | 10 | M5 |
| **30–45** | 28,3 | 23,2 | 4,72 | 12 | M6 |

***Grease nipple***[2)]
*Two lube ports with metal thread are located on both front sides of each carriage. As standard, one grease nipple for manual relubrication is supplied along with the carriage, while the opposite side is secured by a set screw. The metal thread also enables the easy and reliable mounting of automatic lubricators.*

1) If some accessories require longer grease nipples, they will be provided.
2) according to standard JIS 1975:2000

# Accuracy classes

## Accuracy

SKF manufactures its LLT profile rail guides in three accuracy classes. These accuracy classes define the maximum permissible tolerance range of a profile rail system in terms of height, width and parallelism. This choice determines the positioning accuracy of the system within the application (→ **table 1** and chapter *Typical application areas*, **page 72**, for further information).

## Width and height accuracy

The width accuracy N determines the maximum lateral deviation of the carriage and the reference side of the rail in the longitudinal direction. Both sides of the rail and the ground side of the carriage can be used as the reference side.

The height accuracy H is measured between the mounting surface of the carriage and the ground bottom face of the rail. H and N are arithmetic mean values and refer to the centre of the carriage. They are measured at either the same position on the rail "or" not lower.

## Parallelism

This refers to the parallelism tolerance between the two reference planes of the rail and carriage when the carriage is moved along the entire rail length, the rail being screwed to the reference plane. Please refer to **diagram 1** for detailed information.

## Combination of rails and carriages

All carriages and rails of the same size and accuracy class (P5/P3) can be combined with each other while maintaining the initial accuracy class. They are fully interchangeable. Mixed accuracy classes are possible.

**Note:** Accuracy class P1 can only be delivered as a complete system.

**Table 1**

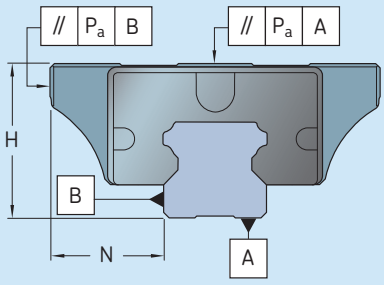


| Accuracy class [1] | Tolerances | | Differences in dimension H and N on one rail | |
|---|---|---|---|---|
| | H | N | ΔH max. | ΔN max. |
| – | µm | | µm | |
| P5 | ±100 | ±40 | 30 | 30 |
| P3 | ±40 | ±20 | 15 | 15 |
| P1 | ±20 | ±10 | 7 | 7 |

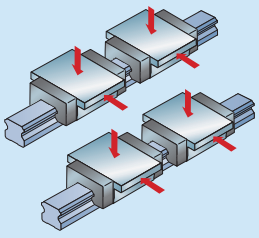

For any combination of carriages and rails

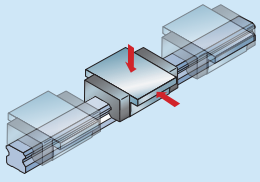

For different carriages on the same rail position

[1] Measured at the centre of the carriage.

**Diagram 1**

**Parallelism**

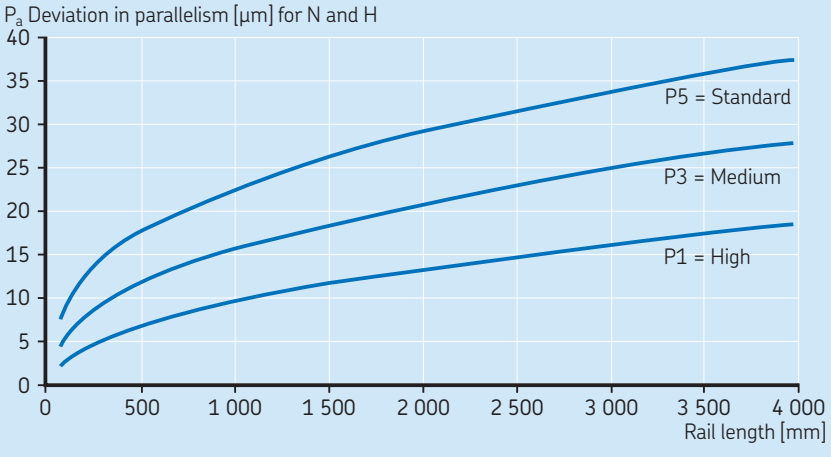

# Ordering key system

| Designations | LLTH | S | 25 | A | 2 | T2 | 1000 | P5 | HD | S0 | A | B0 | D4 | E0 | M | S1 | C | M |
|---|---|---|---|---|---|---|---|---|---|---|---|---|---|---|---|---|---|---|

**Size**
15, 20, 25, 30, 35, 45

**Carriage type**[1)]
SA Flanged carriage, short length, standard height
A Flanged carriage, standard length, standard height
LA Flanged carriage, extended length, standard height
SU Slim-line carriage, short length, standard height
U Slim-line carriage, standard length, standard height
LU Slim-line carriage, extended length, standard height
R Slim-line carriage, standard length, extended height
LR Slim-line carriage, extended length, extended height

**Number of carriages per rail**
1, 2, 4, 6, ...

**Preload class**
T0 Zero preload
T1 Light preload, 2% C
T2 Medium preload, 8% C

**Rail length**
80 mm up to maximum rail length (1 mm steps)

**Precision class**
P5 Standard
P3 Medium
P1 High

**Coating** [2) 3) 4) 5)] (no code for standard: non coated rails and carriages)
HD- Thin dense chrome rail with non coated carriage, available in Europe
HA- Thin dense chrome rail with non coated carriage, available in USA/CAN
HDN Thin dense chrome rail with nickel plated carriage, available in Europe
HAN Thin dense chrome rail with nickel plated carriage, available in USA/CAN

**Sealing** (no code for standard sealing)
S0 Low friction shield

**Jointed rail track** [6)] (if not selected – no code)
A Yes

**Prepared for bellows**
B0 Rails prepared for bellows (for ordering the bellow see ordering key bellows)

**Rail**
D Rail, if customized according to drawing number
D4 Rail with blind holes
D6 [7)] Rail with metal plugs

**Distance between end face and the center of the first mounting hole of the rail**
E0 If no "E" specified, the holes at both rail ends will be positioned equidistantly from either end of the rail (shortest possible "E" dimension)
Exx "E" dimension to be specified, for calculation and minimum "E" dimension (→ **page 51**)

**Carriage mounted on rail** (if not selected – no code)
M Yes

**Additional seals, when part of a system** (other and separate available parts see ordering key accessories)
S1 Scraper plate
S3 Seal kit, additional front seal with scraper plate
S7 Additional front seal

**Quantity of additional seals**
C (2) seals per carriage
S (2) seals per system, outer surface of carriages to have seal mounted

**Additional seals mounted on carriage** [8)] (if not selected – no code)
M Yes

1) Not all combinations of preload / precision class available for each carriage type. Please refer to **pages 34–49**.
2) Only available for preload class T1, precision class P5, and carriage types A, R and U.
3) Only available in preload classes T0 and T1 and precision class P5.
4) Please note: a system with coated rail can have a slightly higher preload and friction. This will be partly eliminated after a short running time. Be aware, that the end of the rail is not normally coated.
5) For size 15 and 20, only carriages with low friction S0 shield shall be used. If seal function is needed, a combination with additional front seal S7 is recommended.
6) Only possible if the ordered rail length exceeds the maximum standard rail length (defined in dimension tables, **pages 35–49**).
7) Available for size 25–45. Mounting tool needs to be ordered separately (→ ordering key accessories).
8) Additional seals can only be mounted on carriage if full system is ordered (Carriage mounted on rail = Yes).

# Ordering key carriages

**Designations** LLTH C 25 A T2 P5 HN S0

**Size**
15, 20, 25, 30, 35, 45

**Carriage type** [1]
SA Flanged carriage, short length, standard height
A Flanged carriage, standard length, standard height
LA Flanged carriage, extended length, standard height
SU Slim-line carriage, short length, standard height
U Slim-line carriage, standard length, standard height
LU Slim-line carriage, extended length, standard height
R Slim-line carriage, standard length, extended height
LR Slim-line carriage, extended length, extended height

**Preload class**
T0 Zero preload
T1 Light preload, 2% C
T2 Medium preload, 8% C

**Precision class**
P5 Standard
P3 Medium
P1 High

**Coating** [2] [3] [4] [5] (no code for standard: non coated carriage)
HN Nickel plated carriage

**Sealing** (no code for standard sealing)
S0 Low friction shield

[1] Not all combinations of preload / precision class available for each carriage type. Please refer to **pages 34–49**.
[2] Only available for preload class T1, precision class P5, and carriage types A, R and U.
[3] Only available in preload classes T0 and T1 and precision class P5.
[4] Please note: a system with coated rails can have a slightly higher preload and friction. This will be partly eliminated after a short running time.
[5] For size 15 and 20, only carriages with low friction S0 shield shall be used. If seal function is needed, a combination with additional front seal S7 is recommended..

# Ordering key bellows

**Designations** LLTH Z 25 B (xxx/xxx/xxx) LAS

**Size**
15, 20, 25, 30, 35, 45

**Bellows** [1]
B Combination of bellows to cover the complete system
B2 Kit, type 2 (carriage to the end of the rail)
B4 Kit, type 4 (between two carriages)
B9 Bellow as spare part (without any fastening system)

**Bellows: definition of number of folds** (max 150 folds per single bellow)
xxx Number of folds
/ Splitting of sections
- No bellows in this section

**Bellows material**
STD Standard material "PUR", (temperature resistance +90 °C)
LAS [2] Special material suitable for laser applications – self fading, (temperature resistance +160 °C)
WEL [3] Special material suitable for welding applications, (temperature resistance +260 °C)

[1] Will be delivered unmounted
[2] Available for sizes 15–30
[3] Available for sizes 35–45

# Ordering key rail

**Designations** LLTH R 25 1000 P5 HD A B0 D4 E0

**Size**
15, 20, 25, 30, 35, 45

**Rail length**
80 mm up to maximum rail length (1 mm steps)

**Precision class**
P5 Standard
P3 Medium
P1 High

**Coating** [1] [2] (no code for standard: non coated rail)
HD Thin dense chrome rail, available in Europe
HA Thin dense chrome rail, available in USA/CAN

**Jointed rail track** [3]
A Yes

**Prepared for Bellows**
B0 Rails prepared for bellows. To order, see "ordering key bellows."

**Rail** [4]
D Rail, if customized according to drawing number
D4 Rail with blind holes
D6 [5] Rail with metal plugs

**Distance between end face and the center of the first mounting hole of the rail**
E0 If no "E" specified, the holes at both rail ends will be positioned equidistantly from either end of the rail (shortest possible "E" dimension)
Exx "E" dimension to be specified, for calculation and minimum "E" dimension, (→ **page 51**)

[1] Only available in precision class P5.
[2] Please note: a system with coated rail can have a slightly higher preload and friction. This will be partly eliminated after a short running time. Be aware that, as standard, the end of the rail is not coated.
[3] Only possible if the ordered rail length exceeds the maximum standard rail length (defined in dimension tables, **pages 35–49**).
[4] Plastic and metal plugs available as spare parts. Please contact SKF for further information.
[5] Available for sizes 25–45. Mounting tool needs to be ordered separately (see ordering key accessories).

# Ordering key accessories (delivered separately)

**Designations** LLTH Z 25 S1

**Size**
15, 20, 25, 30, 35, 45

**Accessories** (will be delivered as single units)
S0 [1] Low friction shield
S1 Scraper plate
S3 Seal kit, additional front seal with scraper plate
S7 Additional front seal
PL Adapter plate, used for side lubrication
VN UA [2] Lubrication connector
D6 [3] Mounting tool for metal plugs

[1] Available for sizes 15–30 to replace standard front seal.
[2] Fits for all types of carriages (→ **page 25**), but not in combination with additional seals (S1/S3/S7).
[3] Available for sizes 25–45.

# Product data

## Carriages

**Pages 34–49**

**LLTHC ... SA**
Flanged carriage, short length, standard height

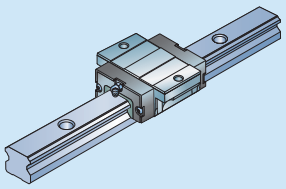

| Size[1] | Load ratings C | $C_0$ |
|---|---|---|
| – | N | |
| **15** | 5 800 | 9 000 |
| **20** | 9 240 | 14 400 |
| **25** | 13 500 | 19 600 |
| **30** | 19 200 | 26 600 |
| **35** | 25 500 | 34 800 |
| **45** | – | – |

**LLTHC ... A**
Flanged carriage, standard length, standard height

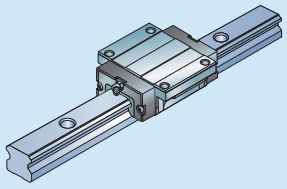

| Size[1] | Load ratings C | $C_0$ |
|---|---|---|
| – | N | |
| **15** | 8 400 | 15 400 |
| **20** | 12 400 | 24 550 |
| **25** | 18 800 | 30 700 |
| **30** | 26 100 | 41 900 |
| **35** | 34 700 | 54 650 |
| **45** | 59 200 | 91 100 |

**LLTHC ... LA**
Flanged carriage, extended length, standard height

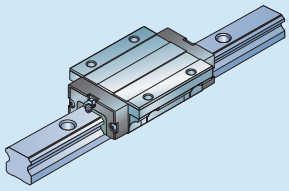

| Size[1] | Load ratings C | $C_0$ |
|---|---|---|
| – | N | |
| **15** | – | – |
| **20** | 15 200 | 32 700 |
| **25** | 24 400 | 44 600 |
| **30** | 33 900 | 60 800 |
| **35** | 45 000 | 79 400 |
| **45** | 72 400 | 121 400 |

**LLTHC ... SU**
Slim-line carriage, short length, standard height

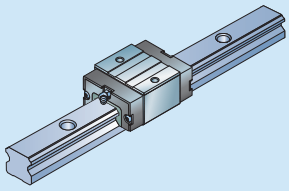

| Size[1] | Load ratings C | $C_0$ |
|---|---|---|
| – | N | |
| **15** | 5 800 | 9 000 |
| **20** | 9 240 | 14 400 |
| **25** | 13 500 | 19 600 |
| **30** | 19 200 | 26 600 |
| **35** | 25 500 | 34 800 |
| **45** | – | – |

**LLTHC ... U**
Slim-line carriage, standard length, standard height

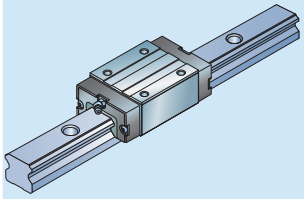

| Size[1] | Load ratings C | $C_0$ |
|---|---|---|
| – | N | |
| **15** | 8 400 | 15 400 |
| **20** | 12 400 | 24 550 |
| **25** | 18 800 | 30 700 |
| **30** | 26 100 | 41 900 |
| **35** | 34 700 | 54 650 |
| **45** | 59 200 | 91 100 |

**LLTHC ... LU**
Slim-line carriage, extended length, standard height

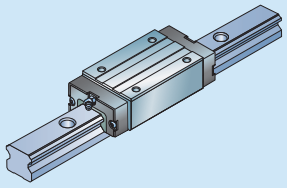

| Size[1] | Load ratings C | $C_0$ |
|---|---|---|
| – | N | |
| **15** | – | – |
| **20** [2] | 15 200 | 32 700 |
| **25** | 24 000 | 44 600 |
| **30** | 33 900 | 60 800 |
| **35** | 45 000 | 79 400 |
| **45** | 72 400 | 121 400 |

**LLTHC ... R**
Slim-line carriage, standard length, extended height

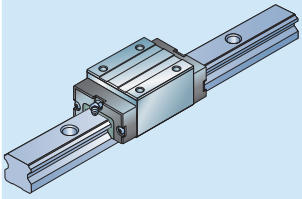

| Size[1] | Load ratings C | $C_0$ |
|---|---|---|
| – | N | |
| **15** | 8 400 | 15 400 |
| **20** | – | – |
| **25** | 18 800 | 30 700 |
| **30** | 26 100 | 41 900 |
| **35** | 34 700 | 54 650 |
| **45** | 59 200 | 91 100 |

**LLTHC ... LR**
Slim-line carriage, extended length, extended height

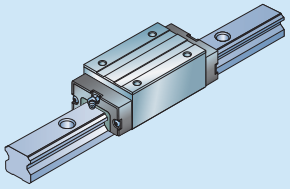

| Size[1] | Load ratings C | $C_0$ |
|---|---|---|
| – | N | |
| **15** | – | – |
| **20** [2] | 15 200 | 32 700 |
| **25** | 24 400 | 44 600 |
| **30** | 33 900 | 60 800 |
| **35** | 45 000 | 79 400 |
| **45** | 72 400 | 121 400 |

[1] Front seal appearance can slightly deviate by size.
[2] LLLTHC 20 LU and LLTHC 20 LR is the same product

# Rails

**Pages 50–55**

## LLTHR rails

Supplied with protective plastic caps for mounting from above.

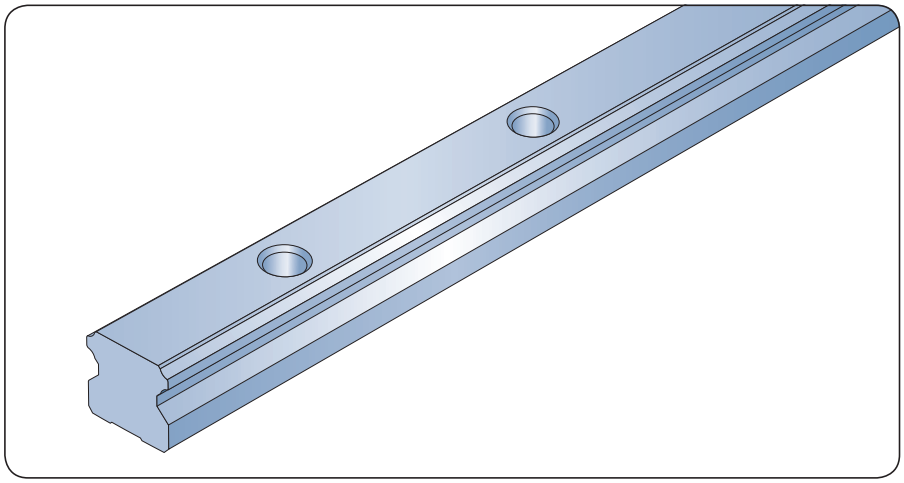

## LLTHR ... D4 rails

With blind holes for mounting from below.

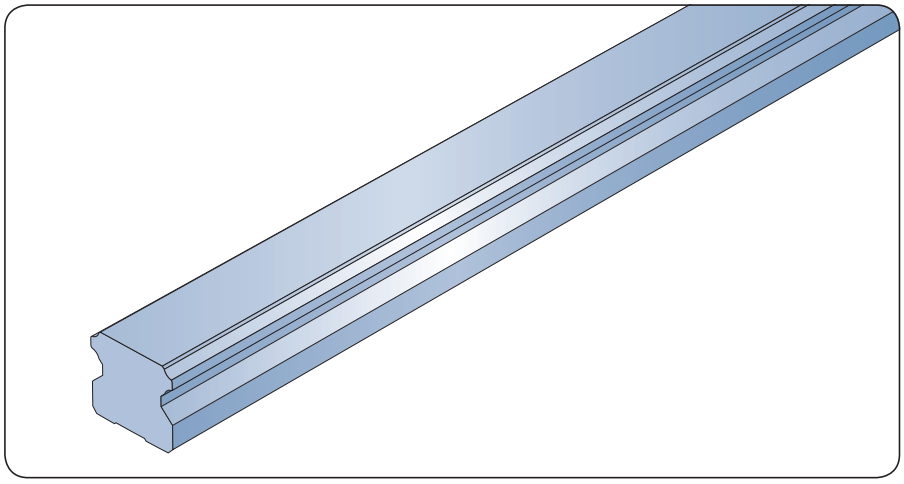

## LLTHR ... D6 rails

Supplied with protective metal plugs for mounting from above.

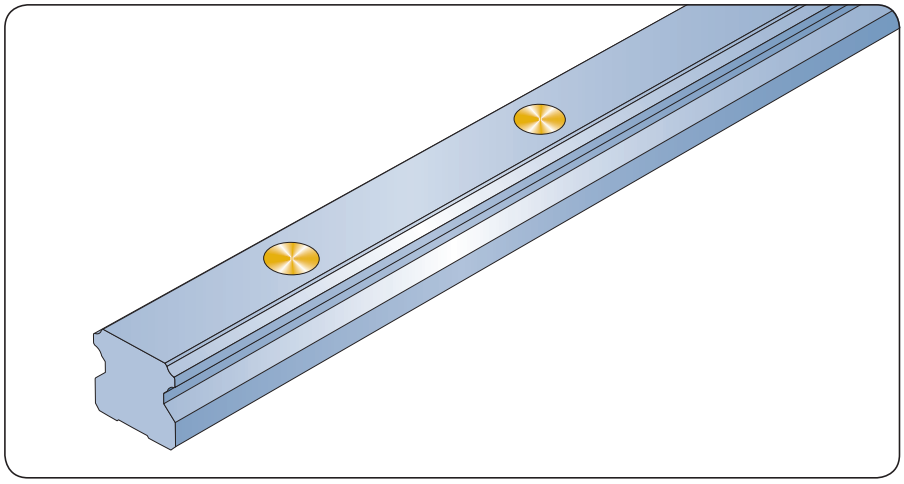

# Carriage LLTHC ... SA

Flanged carriage, short length, standard height

Carriages from size 15 to 30 are also available with low friction S0 shield. Dimensions are the same as standard version. For designation, refer to *Ordering key carriages* (→ **page 30**).

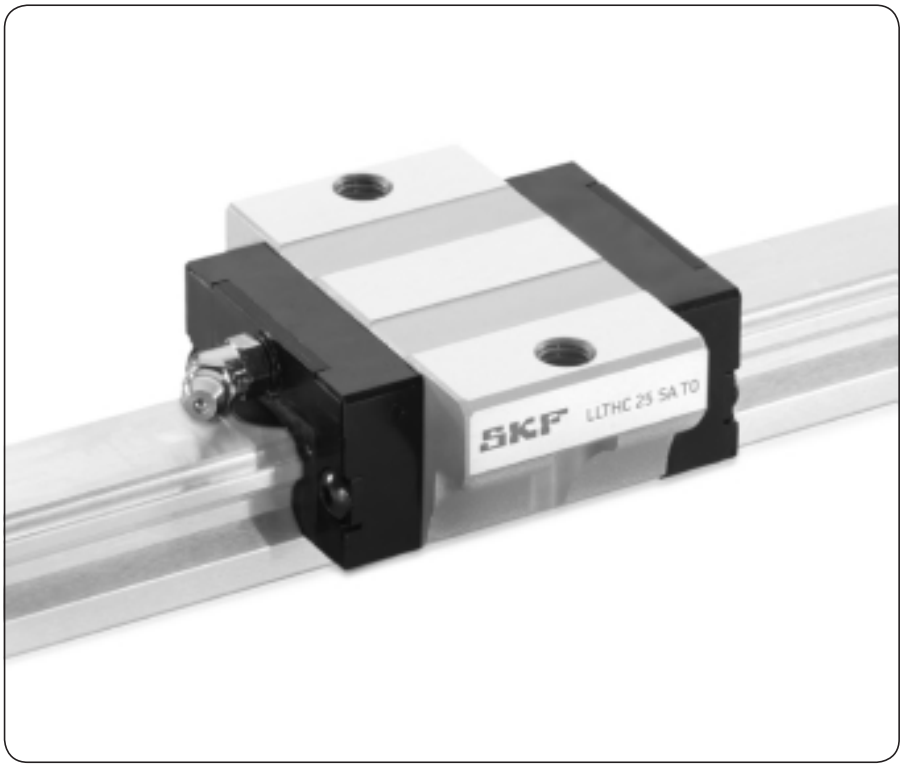


| Size | Accuracy class | Designation [1] Preload class T0 | T1 |
|---|---|---|---|
| – | | – | |
| **15** | P5 | LLTHC 15 SA T0 P5 | LLTHC 15 SA T1 P5 |
| | P3 | LLTHC 15 SA T0 P3 | LLTHC 15 SA T1 P3 |
| | P1 | | LLTHC 15 SA T1 P1 |
| **20** | P5 | LLTHC 20 SA T0 P5 | LLTHC 20 SA T1 P5 |
| | P3 | LLTHC 20 SA T0 P3 | LLTHC 20 SA T1 P3 |
| | P1 | | LLTHC 20 SA T1 P1 |
| **25** | P5 | LLTHC 25 SA T0 P5 | LLTHC 25 SA T1 P5 |
| | P3 | LLTHC 25 SA T0 P3 | LLTHC 25 SA T1 P3 |
| | P1 | | LLTHC 25 SA T1 P1 |
| **30** | P5 | LLTHC 30 SA T0 P5 | LLTHC 30 SA T1 P5 |
| | P3 | LLTHC 30 SA T0 P3 | LLTHC 30 SA T1 P3 |
| | P1 | | LLTHC 30 SA T1 P1 |
| **35** | P5 | LLTHC 35 SA T0 P5 | LLTHC 35 SA T0 P5 |
| | P3 | LLTHC 35 SA T0 P3 | LLTHC 35 SA T0 P3 |
| | P1 | | LLTHC 35 SA T0 P1 |

[1] ■ **Preferred range.**
■ **Only available as system.**
For designation, please refer to designation system.

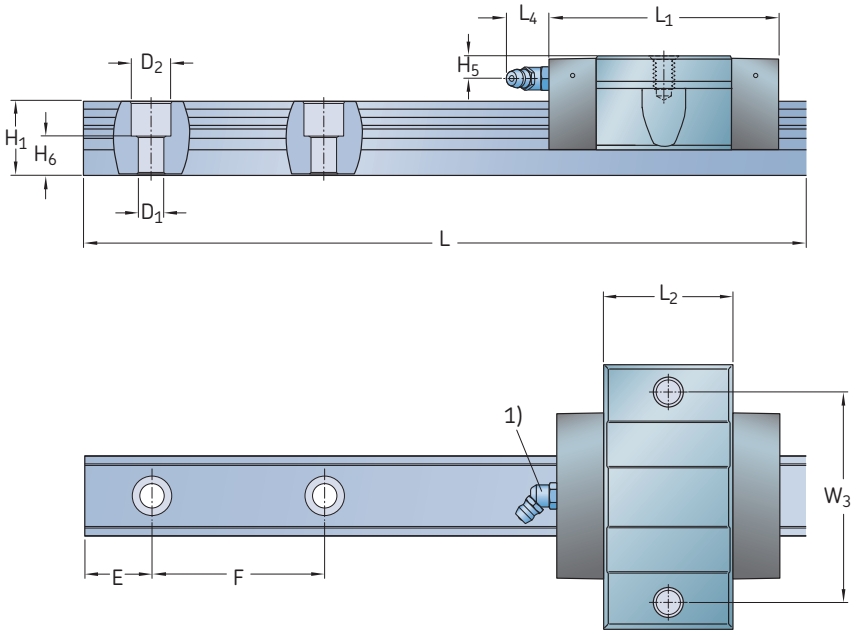


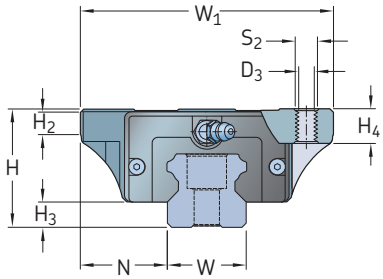


| Size | Assembly dimensions | | | | | Carriage dimensions | | | | | | | |
|---|---|---|---|---|---|---|---|---|---|---|---|---|---|
| | $W_1$ | N | H | $H_2$ | $H_3$ | $L_1$ | $L_2$ | $L_4$ | $W_3$ | $H_4$ | $H_5$ | $D_3$ | $S_2$ |
| – | mm | | | | | | | | | | | | – |
| **15** | 47 | 16 | 24 | 5,9 | 4,6 | 48,9 | 25,6 | 4,3 | 38 | 8 | 4,3 | 4,3 | M5 |
| **20** | 63 | 21,5 | 30 | 6,9 | 5 | 55,4 | 32,1 | 15 | 53 | 9 | 5,7 | 5,2 | M6 |
| **25** | 70 | 23,5 | 36 | 11 | 7 | 66,2 | 38,8 | 16,6 | 57 | 12 | 6,5 | 6,7 | M8 |
| **30** | 90 | 31 | 42 | 9 | 9 | 78 | 45 | 14,6 | 72 | 11,5 | 8 | 8,5 | M10 |
| **35** | 100 | 33 | 48 | 12,3 | 9,5 | 88,8 | 51,4 | 14,6 | 82 | 13 | 8 | 8,5 | M10 |

| Size | Rail dimensions | | | | | | | | | Weight | | Load ratings [2] | | Moments [2] | | | |
|---|---|---|---|---|---|---|---|---|---|---|---|---|---|---|---|---|---|
| | | | | | | | | | | carriage | rail | dynamic | static | dynamic | static | dynamic | static |
| | W | $H_1$ | $H_6$ | F | $D_1$ | $D_2$ | $E_{min}$ –0,75 | $E_{max}$ –0,75 | $L_{max}$ –1,5 | | | C | $C_0$ | $M_x$ | $M_{x0}$ | $M_{y/z}$ | $M_{y0/z0}$ |
| – | mm | | | | | | | | | kg | kg/m | N | | Nm | | | |
| **15** | 15 | 14 | 8,5 | 60 | 4,5 | 7,5 | 10 | 50 | 3 920 | 0,12 | 1,4 | 5 800 | 9 000 | 39 | 60 | 21 | 32 |
| **20** | 20 | 18 | 9,3 | 60 | 6 | 9,5 | 10 | 50 | 3 920 | 0,25 | 2,3 | 9 240 | 14 400 | 83 | 130 | 41 | 64 |
| **25** | 23 | 22 | 12,3 | 60 | 7 | 11 | 10 | 50 | 3 920 | 0,38 | 3,3 | 13 500 | 19 600 | 139 | 202 | 73 | 106 |
| **30** | 28 | 26 | 13,8 | 80 | 9 | 14 | 12 | 70 | 3 944 | 0,56 | 4,8 | 19 200 | 26 600 | 242 | 335 | 120 | 166 |
| **35** | 34 | 29 | 17 | 80 | 9 | 14 | 12 | 70 | 3 944 | 0.83 | 6,6 | 25 500 | 34 800 | 393 | 536 | 182 | 248 |

[1] For detailed information on grease nipples, please refer to **page 27**.
[2] Dynamic load capacities and moments are based on a travel life of 100 km. Please refer to **page 9** for further details.

# Carriage LLTHC ... A

Flanged carriage, standard length, standard height

Carriages from size 15 to 30 are also available with low friction S0 shield. Dimensions are the same as standard version. For designation, refer to *Ordering key carriages* (→ **page 30**).




| Size | Accuracy class | Designation [1] Preload class T0 | T1 | T2 |
|---|---|---|---|---|
| – | | – | | |
| **15** | P5 | LLTHC 15 A T0 P5 | LLTHC 15 A T1 P5 | LLTHC 15 A T2 P5 |
| | P3 | LLTHC 15 A T0 P3 | LLTHC 15 A T1 P3 | LLTHC 15 A T2 P3 |
| | P1 | | LLTHC 15 A T1 P1 | LLTHC 15 A T2 P1 |
| **20** | P5 | LLTHC 20 A T0 P5 | LLTHC 20 A T1 P5 | LLTHC 20 A T2 P5 |
| | P3 | LLTHC 20 A T0 P3 | LLTHC 20 A T1 P3 | LLTHC 20 A T2 P3 |
| | P1 | | LLTHC 20 A T1 P1 | LLTHC 20 A T2 P1 |
| **25** | P5 | LLTHC 25 A T0 P5 | LLTHC 25 A T1 P5 | LLTHC 25 A T2 P5 |
| | P3 | LLTHC 25 A T0 P3 | LLTHC 25 A T1 P3 | LLTHC 25 A T2 P3 |
| | P1 | | LLTHC 25 A T1 P1 | LLTHC 25 A T2 P1 |
| **30** | P5 | LLTHC 30 A T0 P5 | LLTHC 30 A T1 P5 | LLTHC 30 A T2 P5 |
| | P3 | LLTHC 30 A T0 P3 | LLTHC 30 A T1 P3 | LLTHC 30 A T2 P3 |
| | P1 | | LLTHC 30 A T1 P1 | LLTHC 30 A T2 P1 |
| **35** | P5 | LLTHC 35 A T0 P5 | LLTHC 35 A T1 P5 | LLTHC 35 A T2 P5 |
| | P3 | LLTHC 35 A T0 P3 | LLTHC 35 A T1 P3 | LLTHC 35 A T2 P3 |
| | P1 | | LLTHC 35 A T1 P1 | LLTHC 35 A T2 P1 |
| **45** | P5 | LLTHC 45 A T0 P5 | LLTHC 45 A T1 P5 | LLTHC 45 A T2 P5 |
| | P3 | LLTHC 45 A T0 P3 | LLTHC 45 A T1 P3 | LLTHC 45 A T2 P3 |
| | P1 | | LLTHC 45 A T1 P1 | LLTHC 45 A T2 P1 |

[1] ■ **Preferred range.**
■ **Only available as system.**
For designation, please refer to designation system.

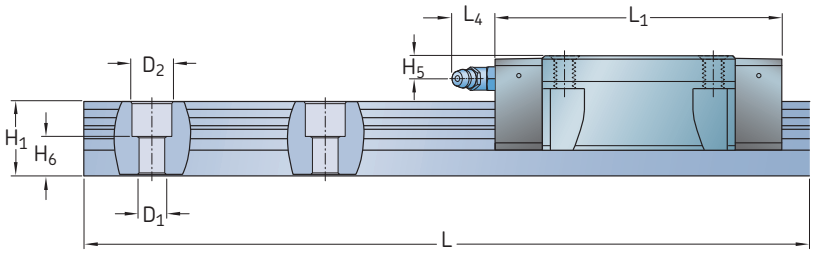


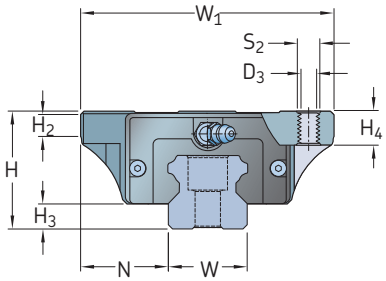


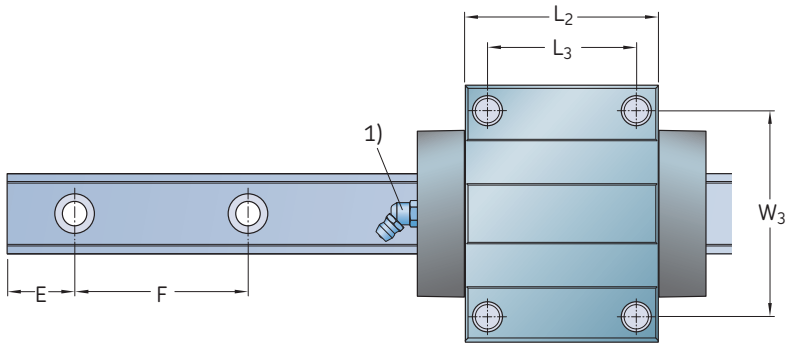


| Size | Assembly dimensions | | | | | Carriage dimensions | | | | | | | | |
|---|---|---|---|---|---|---|---|---|---|---|---|---|---|---|
| | $W_1$ | N | H | $H_2$ | $H_3$ | $L_1$ | $L_2$ | $L_3$ | $L_4$ | $W_3$ | $H_4$ | $H_5$ | $D_3$ | $S_2$ |
| – | mm | | | | | | | | | | | | | – |
| **15** | 47 | 16 | 24 | 5,9 | 4,6 | 63,3 | 40 | 30 | 4,3 | 38 | 8 | 4,3 | 4,3 | M5 |
| **20** | 63 | 21,5 | 30 | 6,9 | 5 | 73,3 | 50 | 40 | 15 | 53 | 9 | 5,7 | 5,2 | M6 |
| **25** | 70 | 23,5 | 36 | 11 | 7 | 84,4 | 57 | 45 | 16,6 | 57 | 12 | 6,5 | 6,7 | M8 |
| **30** | 90 | 31 | 42 | 9 | 9 | 100,4 | 67,4 | 52 | 14,6 | 72 | 11,5 | 8 | 8,5 | M10 |
| **35** | 100 | 33 | 48 | 12,3 | 9,5 | 114,4 | 77 | 62 | 14,6 | 82 | 13 | 8 | 8,5 | M10 |
| **45** | 120 | 37,5 | 60 | 12,3 | 14 | 136,5 | 96 | 80 | 14,6 | 100 | 15 | 8,5 | 10,4 | M12 |

| Size | Rail dimensions | | | | | | | | | Weight | | Load ratings [2] | | Moments | | | |
|---|---|---|---|---|---|---|---|---|---|---|---|---|---|---|---|---|---|
| | | | | | | | | | | carriage | rail | dynamic | static | dynamic | static | dynamic | static |
| | W | $H_1$ | $H_6$ | F | $D_1$ | $D_2$ | $E_{min}$ –0,75 | $E_{max}$ –0,75 | $L_{max}$ –1,5 | | | C | $C_0$ | $M_x$ | $M_{x0}$ | $M_{y/z}$ | $M_{y0/z0}$ |
| – | mm | | | | | | | | | kg | kg/m | N | | Nm | | | |
| **15** | 15 | 14 | 8,5 | 60 | 4,5 | 7,5 | 10 | 50 | 3 920 | 0,21 | 1,4 | 8 400 | 15 400 | 56 | 103 | 49 | 90 |
| **20** | 20 | 18 | 9,3 | 60 | 6 | 9,5 | 10 | 50 | 3 920 | 0,4 | 2,3 | 12 400 | 24 550 | 112 | 221 | 90 | 179 |
| **25** | 23 | 22 | 12,3 | 60 | 7 | 11 | 10 | 50 | 3 920 | 0,57 | 3,3 | 18 800 | 30 700 | 194 | 316 | 155 | 254 |
| **30** | 28 | 26 | 13,8 | 80 | 9 | 14 | 12 | 70 | 3 944 | 1,1 | 4,8 | 26 100 | 41 900 | 329 | 528 | 256 | 410 |
| **35** | 34 | 29 | 17 | 80 | 9 | 14 | 12 | 70 | 3 944 | 1,6 | 6,6 | 34 700 | 54 650 | 535 | 842 | 388 | 611 |
| **45** | 45 | 38 | 20,8 | 105 | 14 | 20 | 16 | 90 | 3 917 | 2,7 | 11,3 | 59 200 | 91 100 | 1215 | 1869 | 825 | 1270 |

[1] For detailed information on grease nipples, please refer to **page 27**.
[2] Dynamic load capacities and moments are based on a travel life of 100 km. Please refer to **page 9** for further details.

# Carriage LLTHC ... LA

Flanged carriage, extended length, standard height

Carriages from size 20 to 30 are also available with low friction S0 shield. Dimensions are the same as standard version. For designation, refer to *Ordering key carriages* (→ **page 30**).

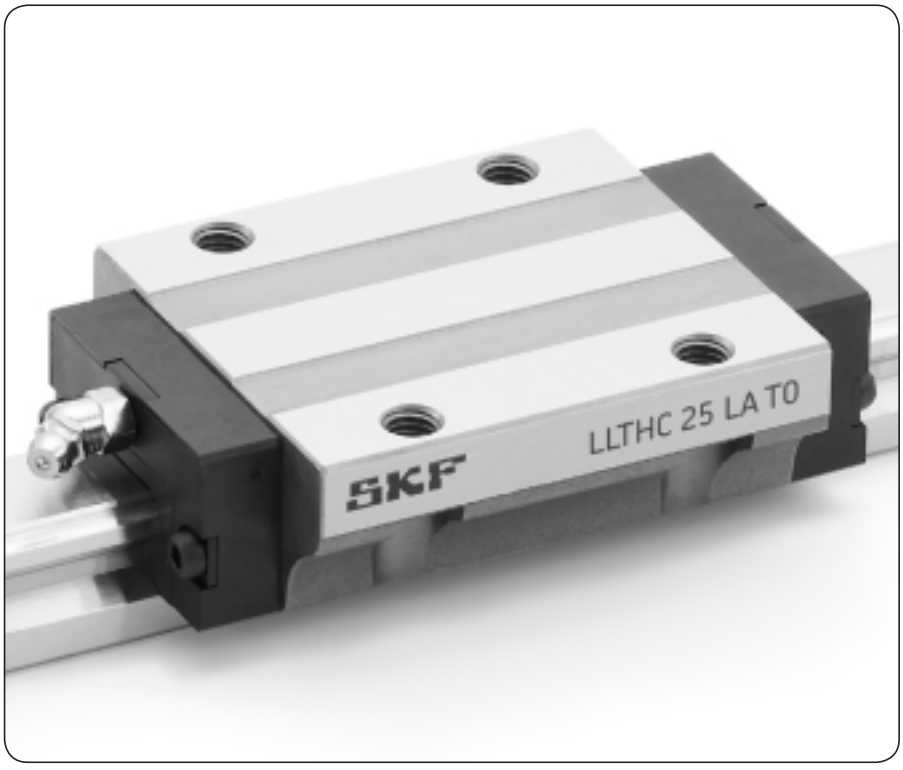


| Size | Accuracy class | Designation [1] Preload class T0 | T1 | T2 |
|---|---|---|---|---|
| – | | – | | |
| **20** | P5 | LLTHC 20 LA T0 P5 | LLTHC 20 LA T1 P5 | LLTHC 20 LA T2 P5 |
| | P3 | LLTHC 20 LA T0 P3 | LLTHC 20 LA T1 P3 | LLTHC 20 LA T2 P3 |
| | P1 | | LLTHC 20 LA T1 P1 | LLTHC 20 LA T2 P1 |
| **25** | P5 | LLTHC 25 LA T0 P5 | LLTHC 25 LA T1 P5 | LLTHC 25 LA T2 P5 |
| | P3 | LLTHC 25 LA T0 P3 | LLTHC 25 LA T1 P3 | LLTHC 25 LA T2 P3 |
| | P1 | | LLTHC 25 LA T1 P1 | LLTHC 25 LA T2 P1 |
| **30** | P5 | LLTHC 30 LA T0 P5 | LLTHC 30 LA T1 P5 | LLTHC 30 LA T2 P5 |
| | P3 | LLTHC 30 LA T0 P3 | LLTHC 30 LA T1 P3 | LLTHC 30 LA T2 P3 |
| | P1 | | LLTHC 30 LA T1 P1 | LLTHC 30 LA T2 P1 |
| **35** | P5 | LLTHC 35 LA T0 P5 | LLTHC 35 LA T1 P5 | LLTHC 35 LA T2 P5 |
| | P3 | LLTHC 35 LA T0 P3 | LLTHC 35 LA T1 P3 | LLTHC 35 LA T2 P3 |
| | P1 | | LLTHC 35 LA T1 P1 | LLTHC 35 LA T2 P1 |
| **45** | P5 | LLTHC 45 LA T0 P5 | LLTHC 45 LA T1 P5 | LLTHC 45 LA T2 P5 |
| | P3 | LLTHC 45 LA T0 P3 | LLTHC 45 LA T1 P3 | LLTHC 45 LA T2 P3 |
| | P1 | | LLTHC 45 LA T1 P1 | LLTHC 45 LA T2 P1 |

[1] ■ **Preferred range.**
■ **Only available as system.**
For designation, please refer to designation system.

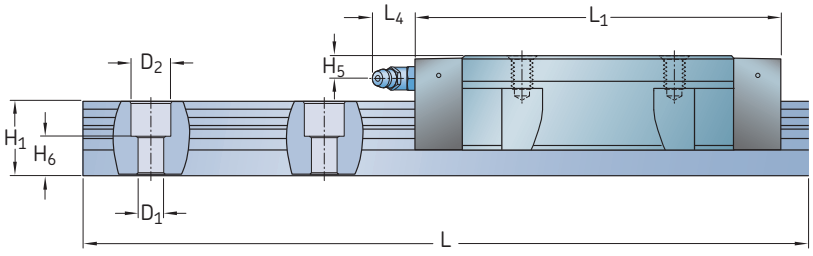


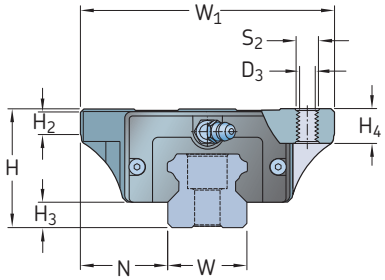


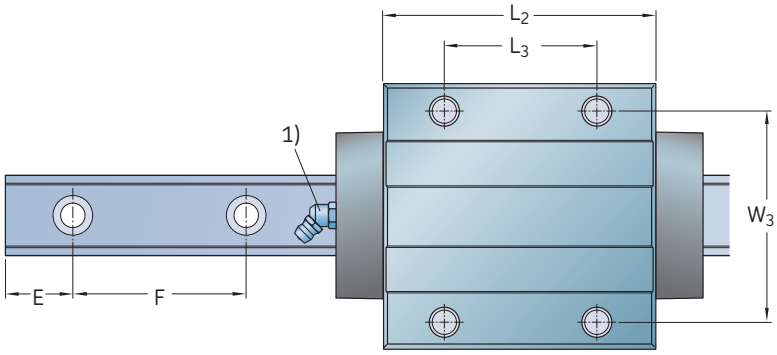


| Size | Assembly dimensions | | | | | Carriage dimensions | | | | | | | | |
|---|---|---|---|---|---|---|---|---|---|---|---|---|---|---|
| | $W_1$ | N | H | $H_2$ | $H_3$ | $L_1$ | $L_2$ | $L_3$ | $L_4$ | $W_3$ | $H_4$ | $H_5$ | $D_3$ | $S_2$ |
| – | mm | | | | | | | | | | | | | – |
| **20** | 63 | 21,5 | 30 | 6,9 | 5 | 89,5 | 66,2 | 40 | 15 | 53 | 9 | 5,7 | 5,2 | M6 |
| **25** | 70 | 23,5 | 36 | 11 | 7 | 106,5 | 79,1 | 45 | 16,6 | 57 | 12 | 6,5 | 6,7 | M8 |
| **30** | 90 | 31 | 42 | 9 | 9 | 125,4 | 92,4 | 52 | 14,6 | 72 | 11,5 | 8 | 8,5 | M10 |
| **35** | 100 | 33 | 48 | 12,3 | 9,5 | 142,9 | 105,5 | 62 | 14,6 | 82 | 13 | 8 | 8,5 | M10 |
| **45** | 120 | 37,5 | 60 | 12,3 | 14 | 168,5 | 128 | 80 | 14,6 | 100 | 15 | 8,5 | 10,4 | M12 |

| Size | Rail dimensions | | | | | | | | | Weight | | Load ratings [2] | | Moments | | | |
|---|---|---|---|---|---|---|---|---|---|---|---|---|---|---|---|---|---|
| | | | | | | | | | | carriage | rail | dynamic | static | dynamic | static | dynamic | static |
| | W | $H_1$ | $H_6$ | F | $D_1$ | $D_2$ | $E_{min}$ –0,75 | $E_{max}$ –0,75 | $L_{max}$ –1,5 | | | C | $C_0$ | $M_x$ | $M_{x0}$ | $M_{y/z}$ | $M_{y0/z0}$ |
| – | mm | | | | | | | | | kg | kg/m | N | | Nm | | | |
| **20** | 20 | 18 | 9,3 | 60 | 6 | 9,5 | 10 | 50 | 3 920 | 0,52 | 2,3 | 15 200 | 32 700 | 137 | 295 | 150 | 322 |
| **25** | 23 | 22 | 12,3 | 60 | 7 | 11 | 10 | 50 | 3 920 | 0,72 | 3,3 | 24 400 | 44 600 | 252 | 460 | 287 | 525 |
| **30** | 28 | 26 | 13,8 | 80 | 9 | 14 | 12 | 70 | 3 944 | 1,4 | 4,8 | 33 900 | 60 800 | 428 | 767 | 466 | 836 |
| **35** | 34 | 29 | 17 | 80 | 9 | 14 | 12 | 70 | 3 944 | 2 | 6,6 | 45 000 | 79 400 | 694 | 1 224 | 706 | 1 246 |
| **45** | 45 | 38 | 20,8 | 105 | 14 | 20 | 16 | 90 | 3 917 | 3,6 | 11,3 | 72 400 | 121 400 | 1 485 | 2 491 | 1 376 | 2 308 |

[1] For detailed information on grease nipples, please refer to **page 27**.
[2] Dynamic load capacities and moments are based on a travel life of 100 km. Please refer to **page 9** for further details.

# Carriage LLTHC ... SU

Slim-line carriage, short length, standard height

Carriages from size 15 to 30 are also available with low friction S0 shield. Dimensions are the same as standard version. For designation, refer to *Ordering key carriages* (→ **page 30**).

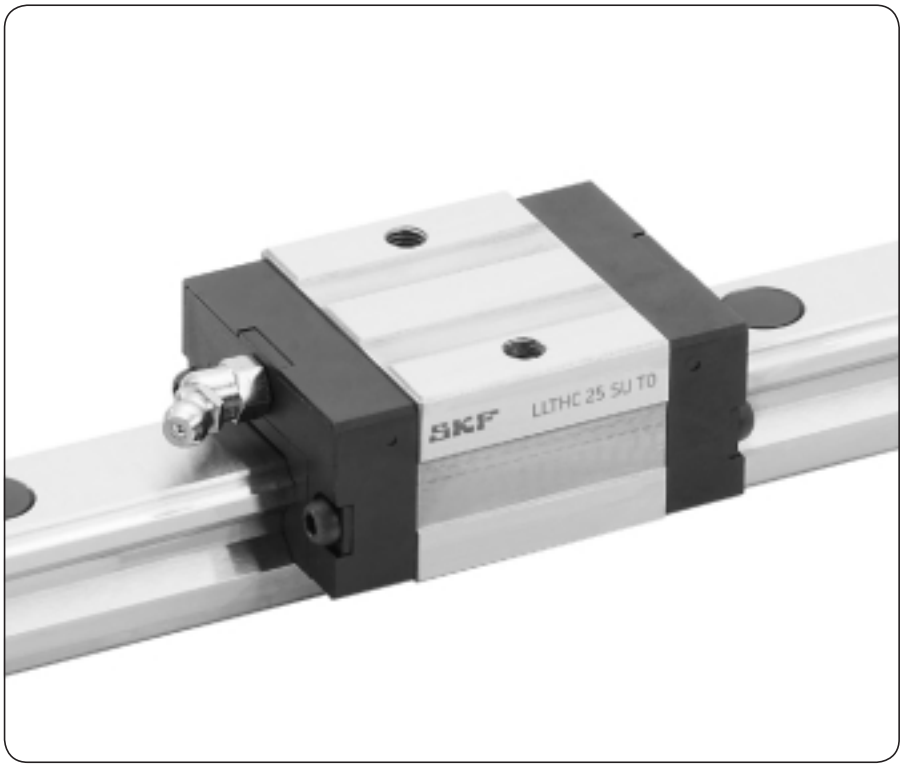


| Size | Accuracy class | Designation [1] preload class T0 | T1 |
|---|---|---|---|
| – | | – | |
| **15** | P5 | LLTHC 15 SU T0 P5 | LLTHC 15 SU T1 P5 |
| | P3 | LLTHC 15 SU T0 P3 | LLTHC 15 SU T1 P3 |
| | P1 | | LLTHC 15 SU T1 P1 |
| **20** | P5 | LLTHC 20 SU T0 P5 | LLTHC 20 SU T1 P5 |
| | P3 | LLTHC 20 SU T0 P3 | LLTHC 20 SU T1 P3 |
| | P1 | | LLTHC 20 SU T1 P1 |
| **25** | P5 | LLTHC 25 SU T0 P5 | LLTHC 25 SU T1 P5 |
| | P3 | LLTHC 25 SU T0 P3 | LLTHC 25 SU T1 P3 |
| | P1 | | LLTHC 25 SU T1 P1 |
| **30** | P5 | LLTHC 30 SU T0 P5 | LLTHC 30 SU T1 P5 |
| | P3 | LLTHC 30 SU T0 P3 | LLTHC 30 SU T1 P3 |
| | P1 | | LLTHC 30 SU T1 P1 |
| **35** | P5 | LLTHC 35 SU T0 P5 | LLTHC 35 SU T1 P5 |
| | P3 | LLTHC 35 SU T0 P3 | LLTHC 35 SU T1 P3 |
| | P1 | | LLTHC 35 SU T1 P1 |

[1] ■ **Preferred range.**
■ **Only available as system.**
For designation, please refer to designation system.

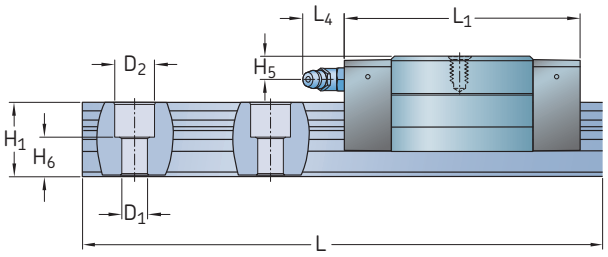


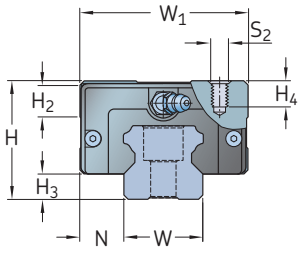


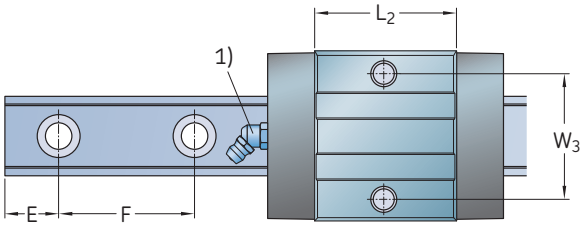


| Size | Assembly dimensions | | | | | Carriage dimensions | | | | | | |
|---|---|---|---|---|---|---|---|---|---|---|---|---|
| | $W_1$ | N | H | $H_2$ | $H_3$ | $L_1$ | $L_2$ | $L_4$ | $W_3$ | $H_4$ | $H_5$ | $S_2$ |
| – | mm | | | | | | | | | | | – |
| **15** | 34 | 9,5 | 24 | 4,2 | 4,6 | 48,9 | 25,6 | 4,3 | 26 | 4 | 4,3 | M4 |
| **20** | 44 | 12 | 30 | 8,3 | 5 | 55,4 | 32,1 | 15 | 32 | 6,5 | 5,7 | M5 |
| **25** | 48 | 12,5 | 36 | 8,2 | 7 | 66,2 | 38,8 | 16,6 | 35 | 6,5 | 6,5 | M6 |
| **30** | 60 | 16 | 42 | 11,3 | 9 | 78 | 45 | 14,6 | 40 | 8,5 | 8 | M8 |
| **35** | 70 | 18 | 48 | 11 | 9,5 | 88,8 | 51,4 | 14,6 | 50 | 10 | 8 | M8 |

| Size | Rail dimensions | | | | | | | | | Weight | | Load ratings [2] | | Moments [2] | | | |
|---|---|---|---|---|---|---|---|---|---|---|---|---|---|---|---|---|---|
| | | | | | | | | | | carriage | rail | dynamic | static | dynamic | static | dynamic | static |
| | W | $H_1$ | F | $D_1$ | $D_2$ | $H_6$ | $E_{min}$ –0,75 | $E_{max}$ –0,75 | $L_{max}$ –1,5 | | | C | $C_0$ | $M_x$ | $M_{x0}$ | $M_{y/z}$ | $M_{y0/z0}$ |
| – | mm | | | | | | | | | kg | kg/m | N | | Nm | | | |
| **15** | 15 | 14 | 60 | 4,5 | 7,5 | 8,5 | 10 | 50 | 3 920 | 0,1 | 1,4 | 5 800 | 9 000 | 39 | 60 | 21 | 32 |
| **20** | 20 | 18 | 60 | 6 | 9,5 | 9,3 | 10 | 50 | 3 920 | 0,17 | 2,3 | 9 240 | 14 400 | 83 | 130 | 41 | 64 |
| **25** | 23 | 22 | 60 | 7 | 11 | 12,3 | 10 | 50 | 3 920 | 0,21 | 3,3 | 13 500 | 19 600 | 139 | 202 | 73 | 106 |
| **30** | 28 | 26 | 80 | 9 | 14 | 13,8 | 12 | 70 | 3 944 | 0,48 | 4,8 | 19 200 | 26 600 | 242 | 335 | 120 | 166 |
| **35** | 34 | 29 | 80 | 9 | 14 | 17 | 12 | 70 | 3 944 | 0,8 | 6,6 | 25 500 | 34 800 | 393 | 536 | 182 | 248 |

[1] For detailed information on grease nipples, please refer to **page 27.**
[2] Dynamic load capacities and moments are based on a travel life of 100 km. Please refer to **page 9** for further details.

# Carriage LLTHC ... U

Slim-line carriage, standard length, standard height

Carriages from size 15 to 30 are also available with low friction S0 shield. Dimensions are the same as standard version. For designation, refer to *Ordering key carriages* (→ **page 30**).

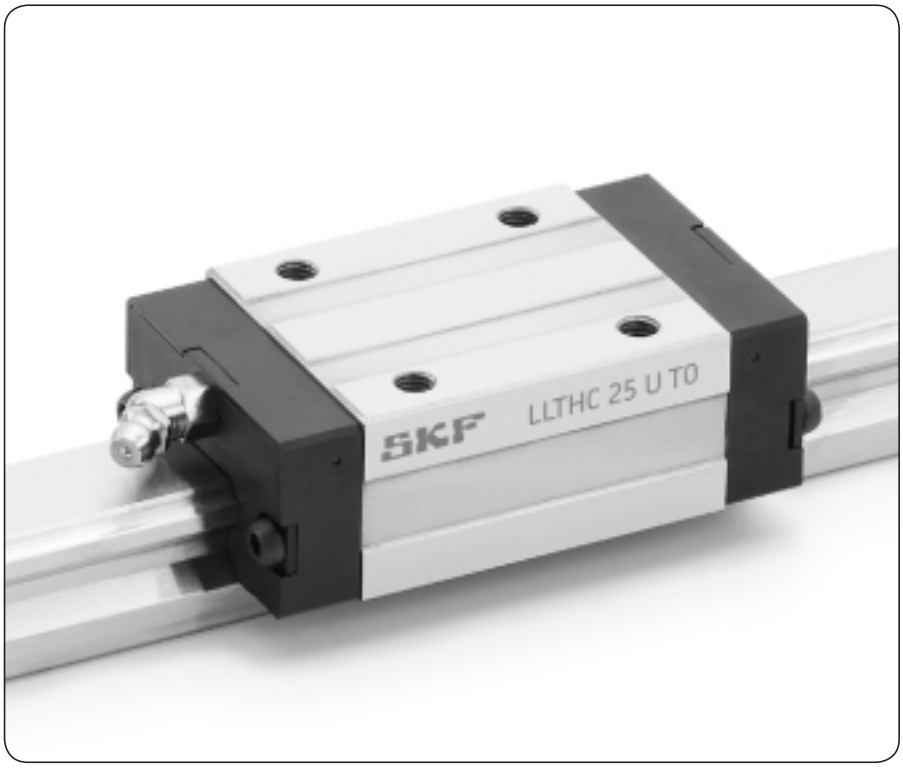


| Size | Accuracy class | Designation [1] preload class T0 | T1 | T2 |
|---|---|---|---|---|
| – | | – | | |
| **15** | P5 | LLTHC 15 U T0 P5 | LLTHC 15 U T1 P5 | LLTHC 15 U T2 P5 |
| | P3 | LLTHC 15 U T0 P3 | LLTHC 15 U T1 P3 | LLTHC 15 U T2 P3 |
| | P1 | | LLTHC 15 U T1 P1 | LLTHC 15 U T2 P1 |
| **20** | P5 | LLTHC 20 U T0 P5 | LLTHC 20 U T1 P5 | LLTHC 20 U T2 P5 |
| | P3 | LLTHC 20 U T0 P3 | LLTHC 20 U T1 P3 | LLTHC 20 U T2 P3 |
| | P1 | | LLTHC 20 U T1 P1 | LLTHC 20 U T2 P1 |
| **25** | P5 | LLTHC 25 U T0 P5 | LLTHC 25 U T1 P5 | LLTHC 25 U T2 P5 |
| | P3 | LLTHC 25 U T0 P3 | LLTHC 25 U T1 P3 | LLTHC 25 U T2 P3 |
| | P1 | | LLTHC 25 U T1 P1 | LLTHC 25 U T2 P1 |
| **30** | P5 | LLTHC 30 U T0 P5 | LLTHC 30 U T1 P5 | LLTHC 30 U T2 P5 |
| | P3 | LLTHC 30 U T0 P3 | LLTHC 30 U T1 P3 | LLTHC 30 U T2 P3 |
| | P1 | | LLTHC 30 U T1 P1 | LLTHC 30 U T2 P1 |
| **35** | P5 | LLTHC 35 U T0 P5 | LLTHC 35 U T1 P5 | LLTHC 35 U T2 P5 |
| | P3 | LLTHC 35 U T0 P3 | LLTHC 35 U T1 P3 | LLTHC 35 U T2 P3 |
| | P1 | | LLTHC 35 U T1 P1 | LLTHC 35 U T2 P1 |
| **45** | P5 | LLTHC 45 U T0 P5 | LLTHC 45 U T1 P5 | LLTHC 45 U T2 P5 |
| | P3 | LLTHC 45 U T0 P3 | LLTHC 45 U T1 P3 | LLTHC 45 U T2 P3 |
| | P1 | | LLTHC 45 U T1 P1 | LLTHC 45 U T2 P1 |

[1] ■ **Preferred range.**
■ **Only available as system.**
For designation, please refer to designation system.

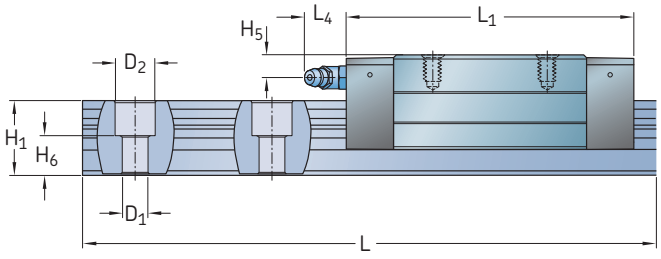


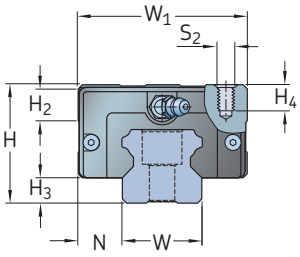


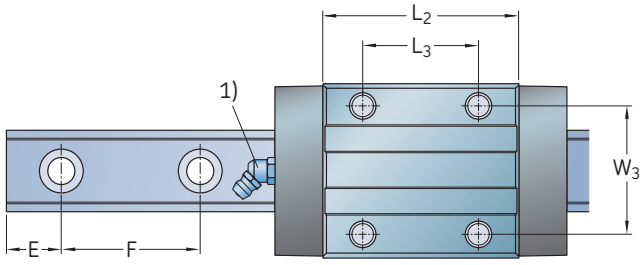


| Size | Assembly dimensions | | | | | Carriage dimensions | | | | | | | |
|---|---|---|---|---|---|---|---|---|---|---|---|---|---|
| | $W_1$ | N | H | $H_2$ | $H_3$ | $L_1$ | $L_2$ | $L_3$ | $L_4$ | $W_3$ | $H_4$ | $H_5$ | $S_2$ |
| – | mm | | | | | | | | | | | | – |
| **15** | 34 | 9,5 | 24 | 4,2 | 4,6 | 63,3 | 40 | 26 | 4,3 | 26 | 4 | 4,3 | M4 |
| **20** | 44 | 12 | 30 | 8,3 | 5 | 73,3 | 50 | 36 | 15 | 32 | 6,5 | 5,7 | M5 |
| **25** | 48 | 12,5 | 36 | 8,2 | 7 | 84,4 | 57 | 35 | 16,6 | 35 | 6,5 | 6,5 | M6 |
| **30** | 60 | 16 | 42 | 11,3 | 9 | 100,4 | 67,4 | 40 | 14,6 | 40 | 8,5 | 8 | M8 |
| **35** | 70 | 18 | 48 | 11 | 9,5 | 114,4 | 77 | 50 | 14,6 | 50 | 10 | 8 | M8 |
| **45** | 86 | 20,5 | 60 | 10,9 | 14 | 136,5 | 96 | 60 | 14,6 | 60 | 12 | 8,5 | M10 |

| Size | Rail dimensions | | | | | | | | | Weight | | Load ratings [2] | | Moments [2] | | | |
|---|---|---|---|---|---|---|---|---|---|---|---|---|---|---|---|---|---|
| | W | $H_1$ | $H_6$ | F | $D_1$ | $D_2$ | $E_{min}$ –0,75 | $E_{max}$ –0,75 | $L_{max}$ –1,5 | carriage | rail | dynamic C | static $C_0$ | dynamic $M_x$ | static $M_{x0}$ | dynamic $M_{y/z}$ | static $M_{y0/z0}$ |
| – | mm | | | | Ø | | mm | | | kg | kg/m | N | | Nm | | | |
| **15** | 15 | 14 | 8,5 | 60 | 4,5 | 7,5 | 10 | 50 | 3 920 | 0,17 | 1,4 | 8 400 | 15 400 | 56 | 103 | 49 | 90 |
| **20** | 20 | 18 | 9,3 | 60 | 6 | 9,5 | 10 | 50 | 3 920 | 0,26 | 2,3 | 12 400 | 24 550 | 112 | 221 | 90 | 179 |
| **25** | 23 | 22 | 12,3 | 60 | 7 | 11 | 10 | 50 | 3 920 | 0,38 | 3,3 | 18 800 | 30 700 | 194 | 316 | 155 | 254 |
| **30** | 28 | 26 | 13,8 | 80 | 9 | 14 | 12 | 70 | 3 944 | 0,81 | 4,8 | 26 100 | 41 900 | 329 | 528 | 256 | 410 |
| **35** | 34 | 29 | 17 | 80 | 9 | 14 | 12 | 70 | 3 944 | 1,2 | 6,6 | 34 700 | 54 650 | 535 | 842 | 388 | 611 |
| **45** | 45 | 38 | 20,8 | 105 | 14 | 20 | 16 | 90 | 3 917 | 2,1 | 11,3 | 59 200 | 91 100 | 1 215 | 1 869 | 825 | 1 270 |

[1] For detailed information on grease nipples, please refer to **page 27.**
[2] Dynamic load capacities and moments are based on a travel life of 100 km. Please refer to **page 9** for further details.

# Carriage LLTHC ... LU

Slim-line carriage, extended length, standard height

Carriages from size 25 to 30 are also available with low friction S0 shield. Dimensions are the same as standard version. For designation, refer to *Ordering key carriages* (→ **page 30**).

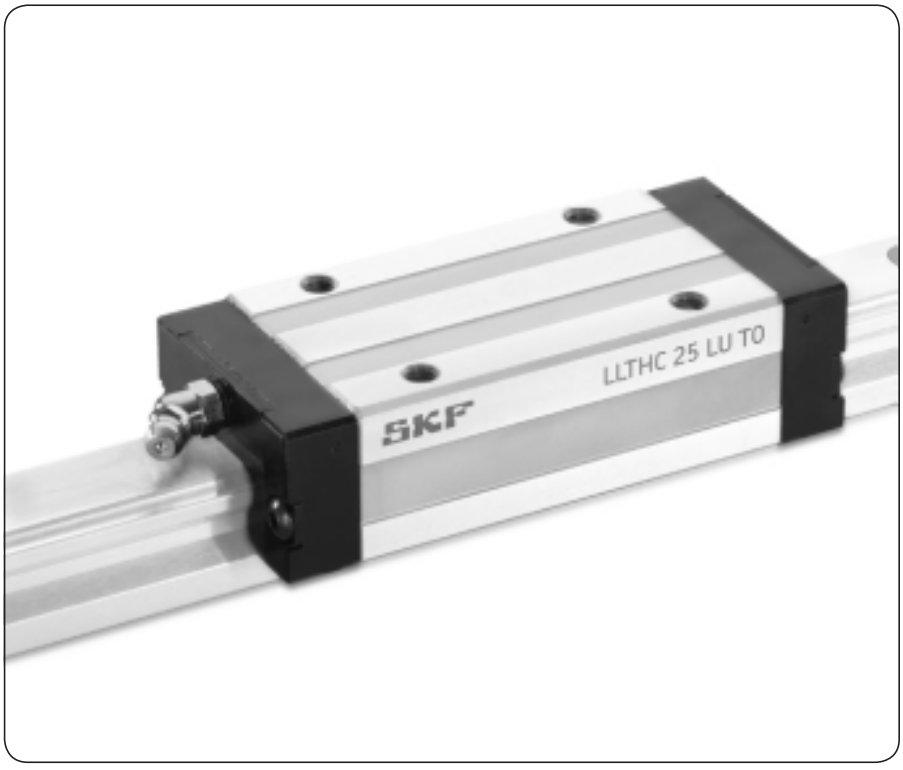


| Size | Accuracy class | Designation [1] Preload class T0 | T1 | T2 |
|---|---|---|---|---|
| – | | – | | |
| **25** | P5 | LLTHC 25 LU T0 P5 | LLTHC 25 LU T1 P5 | LLTHC 25 LU T2 P5 |
| | P3 | LLTHC 25 LU T0 P3 | LLTHC 25 LU T1 P3 | LLTHC 25 LU T2 P3 |
| | P1 | | LLTHC 25 LU T1 P1 | LLTHC 25 LU T2 P1 |
| **30** | P5 | LLTHC 30 LU T0 P5 | LLTHC 30 LU T1 P5 | LLTHC 30 LU T2 P5 |
| | P3 | LLTHC 30 LU T0 P3 | LLTHC 30 LU T1 P3 | LLTHC 30 LU T2 P3 |
| | P1 | | LLTHC 30 LU T1 P1 | LLTHC 30 LU T2 P1 |
| **35** | P5 | LLTHC 35 LU T0 P5 | LLTHC 35 LU T1 P5 | LLTHC 35 LU T2 P5 |
| | P3 | LLTHC 35 LU T0 P3 | LLTHC 35 LU T1 P3 | LLTHC 35 LU T2 P3 |
| | P1 | | LLTHC 35 LU T1 P1 | LLTHC 35 LU T2 P1 |
| **45** | P5 | LLTHC 45 LU T0 P5 | LLTHC 45 LU T1 P5 | LLTHC 45 LU T2 P5 |
| | P3 | LLTHC 45 LU T0 P3 | LLTHC 45 LU T1 P3 | LLTHC 45 LU T2 P3 |
| | P1 | | LLTHC 45 LU T1 P1 | LLTHC 45 LU T2 P1 |

[1] ■ **Preferred range.**
■ **Only available as system.**
For designation, please refer to designation system.

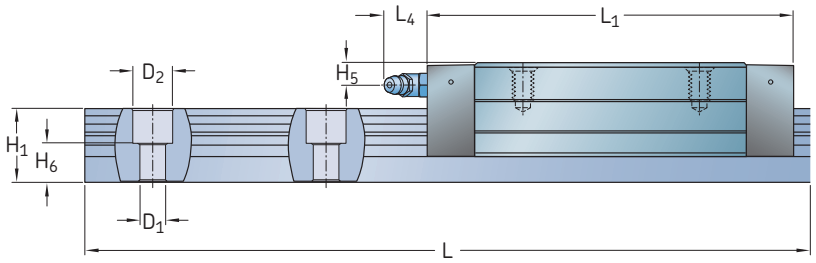


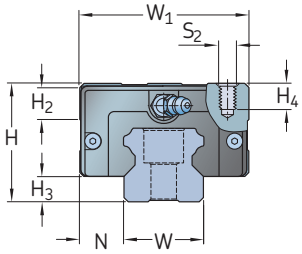


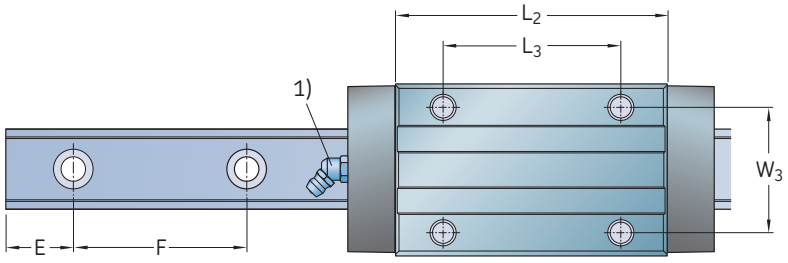


| Size | Assembly dimensions | | | | | Carriage dimensions | | | | | | | |
|---|---|---|---|---|---|---|---|---|---|---|---|---|---|
| | $W_1$ | N | H | $H_2$ | $H_3$ | $L_1$ | $L_2$ | $L_3$ | $L_4$ | $W_3$ | $H_4$ | $H_5$ | $S_2$ |
| – | mm | | | | | | | | | | | | – |
| **25** | 48 | 12,5 | 36 | 8,2 | 7 | 106,5 | 79,1 | 50 | 16,6 | 35 | 6,5 | 6,5 | M6 |
| **30** | 60 | 16 | 42 | 11,3 | 9 | 125,4 | 92,4 | 60 | 14,6 | 40 | 8,5 | 8 | M8 |
| **35** | 70 | 18 | 48 | 11 | 9,5 | 142,9 | 105,5 | 72 | 14,6 | 50 | 10 | 8 | M8 |
| **45** | 86 | 20,5 | 60 | 10,9 | 14 | 168,5 | 128 | 80 | 14,6 | 60 | 12 | 8,5 | M10 |

| Size | Rail dimensions | | | | | | | | | Weight | | Load ratings [2] | | Moments [2] | | | |
|---|---|---|---|---|---|---|---|---|---|---|---|---|---|---|---|---|---|
| | W | $H_1$ | $H_6$ | F | $D_1$ | $D_2$ | $E_{min}$ –0,75 | $E_{max}$ –0,75 | $L_{max}$ –1,5 | carriage | rail | dynamic C | static $C_0$ | dynamic $M_x$ | static $M_{x0}$ | dynamic $M_{y/z}$ | static $M_{y0/z0}$ |
| – | mm | | | | | | mm | | | kg | kg/m | N | | Nm | | | |
| **25** | 23 | 22 | 12,3 | 60 | 7 | 11 | 10 | 50 | 3 920 | 0,47 | 3,3 | 24 400 | 44 600 | 252 | 460 | 287 | 525 |
| **30** | 28 | 26 | 13,8 | 80 | 9 | 14 | 12 | 70 | 3 944 | 0,82 | 4,8 | 33 900 | 60 800 | 428 | 767 | 466 | 836 |
| **35** | 34 | 29 | 17 | 80 | 9 | 14 | 12 | 70 | 3 944 | 1,26 | 6,6 | 45 000 | 79 400 | 694 | 1 224 | 706 | 1 246 |
| **45** | 45 | 38 | 20,8 | 105 | 14 | 20 | 16 | 90 | 3 917 | 2,11 | 11,3 | 72 400 | 121 400 | 1 485 | 2 491 | 1 376 | 2 308 |

[1] For detailed information on grease nipples, please refer to **page 27**.
[2] Dynamic load capacities and moments are based on a travel life of 100 km. Please refer to **page 9** for further details.

# Carriage LLTHC ... R

Slim-line carriage, standard length, extended height

Carriages from size 15 to 30 are also available with low friction S0 shield. Dimensions are the same as standard version. For designation, refer to *Ordering key carriages* (→ **page 30**).

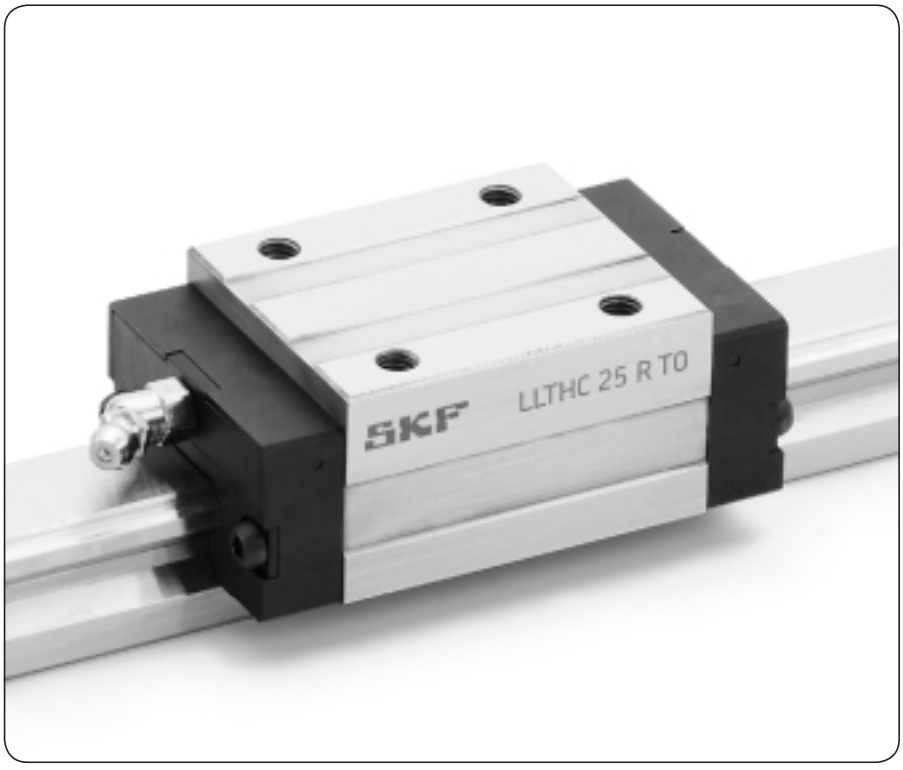


| Size | Accuracy class | Designation [1] Preload class T0 | T1 | T2 |
|---|---|---|---|---|
| – | | – | | |
| **15** | P5 | LLTHC 15 R T0 P5 | LLTHC 15 R T1 P5 | LLTHC 15 R T2 P5 |
| | P3 | LLTHC 15 R T0 P3 | LLTHC 15 R T1 P3 | LLTHC 15 R T2 P3 |
| | P1 | | LLTHC 15 R T1 P1 | LLTHC 15 R T2 P1 |
| **25** | P5 | LLTHC 25 R T0 P5 | LLTHC 25 R T1 P5 | LLTHC 25 R T2 P5 |
| | P3 | LLTHC 25 R T0 P3 | LLTHC 25 R T1 P3 | LLTHC 25 R T2 P3 |
| | P1 | | LLTHC 25 R T1 P1 | LLTHC 25 R T2 P1 |
| **30** | P5 | LLTHC 30 R T0 P5 | LLTHC 30 R T1 P5 | LLTHC 30 R T2 P5 |
| | P3 | LLTHC 30 R T0 P3 | LLTHC 30 R T1 P3 | LLTHC 30 R T2 P3 |
| | P1 | | LLTHC 30 R T1 P1 | LLTHC 30 R T2 P1 |
| **35** | P5 | LLTHC 35 R T0 P5 | LLTHC 35 R T1 P5 | LLTHC 35 R T2 P5 |
| | P3 | LLTHC 35 R T0 P3 | LLTHC 35 R T1 P3 | LLTHC 35 R T2 P3 |
| | P1 | | LLTHC 35 R T1 P1 | LLTHC 35 R T2 P1 |
| **45** | P5 | LLTHC 45 R T0 P5 | LLTHC 45 R T1 P5 | LLTHC 45 R T2 P5 |
| | P3 | LLTHC 45 R T0 P3 | LLTHC 45 R T1 P3 | LLTHC 45 R T2 P3 |
| | P1 | | LLTHC 45 R T1 P1 | LLTHC 45 R T2 P1 |

[1] ■ **Preferred range.**
■ **Only available as system.**
For designation, please refer to designation system.

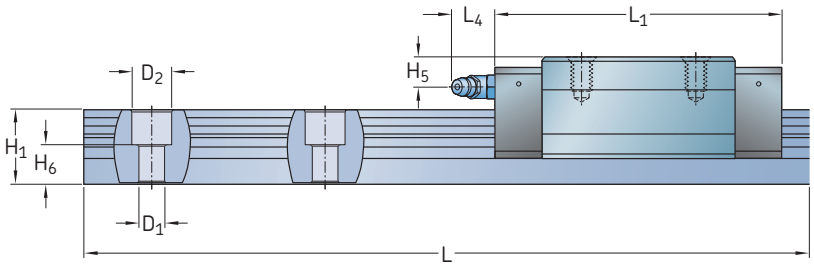


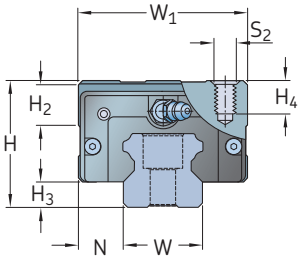


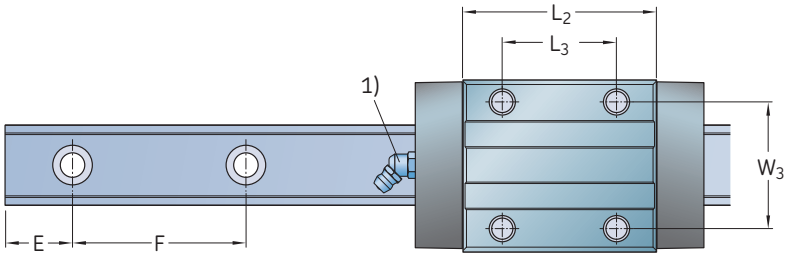


| Size | Assembly dimensions | | | | | Carriage dimensions | | | | | | | |
|---|---|---|---|---|---|---|---|---|---|---|---|---|---|
| | $W_1$ | N | H | $H_2$ | $H_3$ | $L_1$ | $L_2$ | $L_3$ | $L_4$ | $W_3$ | $H_4$ | $H_5$ | $S_2$ |
| – | mm | | | | | | | | | | | | – |
| **15** | 34 | 9,5 | 28 | 7,8 | 4,6 | 63,3 | 40 | 26 | 15 | 26 | 7,5 | 8,3 | M4 |
| **25** | 48 | 12,5 | 40 | 12,2 | 7 | 84,4 | 57 | 35 | 16,6 | 35 | 10 | 10,5 | M6 |
| **30** | 60 | 16 | 45 | 14,3 | 9 | 100,4 | 67,4 | 40 | 14,6 | 40 | 11,2 | 11 | M8 |
| **35** | 70 | 18 | 55 | 18 | 9,5 | 114,4 | 77 | 50 | 14,6 | 50 | 17 | 15 | M8 |
| **45** | 86 | 20,5 | 70 | 20,9 | 14 | 136,5 | 96 | 60 | 14,6 | 60 | 20,5 | 18,5 | M10 |

| Size | Rail dimensions | | | | | | | | | Weight | | Load ratings [2] | | Moments [2] | | | |
|---|---|---|---|---|---|---|---|---|---|---|---|---|---|---|---|---|---|
| | | | | | | | | | | carriage | rail | dynamic | static | dynamic | static | dynamic | static |
| | W | $H_1$ | $H_6$ | F | $D_1$ | $D_2$ | $E_{min}$ –0,75 | $E_{max}$ –0,75 | $L_{max}$ –1,5 | | | C | $C_0$ | $M_x$ | $M_{x0}$ | $M_{y/z}$ | $M_{y0/z0}$ |
| – | mm | | | | | | mm | | | kg | kg/m | N | | Nm | | | |
| **15** | 15 | 14 | 8,5 | 60 | 4,5 | 7,5 | 10 | 50 | 3 920 | 0,19 | 1,4 | 8 400 | 15 400 | 56 | 103 | 49 | 90 |
| **25** | 23 | 22 | 12,3 | 60 | 7 | 11 | 10 | 50 | 3 920 | 0,45 | 3,3 | 18 800 | 30 700 | 194 | 316 | 155 | 254 |
| **30** | 28 | 26 | 13,8 | 80 | 9 | 14 | 12 | 70 | 3 944 | 0,91 | 4,8 | 26 100 | 41 900 | 329 | 528 | 256 | 410 |
| **35** | 34 | 29 | 17 | 80 | 9 | 14 | 12 | 70 | 3 944 | 1,5 | 6,6 | 34 700 | 54 650 | 535 | 842 | 388 | 611 |
| **45** | 45 | 38 | 20,8 | 105 | 14 | 20 | 16 | 90 | 3 917 | 2,3 | 11,3 | 59 200 | 91 100 | 1 215 | 1 869 | 825 | 1 270 |

[1] For detailed information on grease nipples, please refer to **page 27**.
[2] Dynamic load capacities and moments are based on a travel life of 100 km. Please refer to **page 9** for further details.

# Carriage LLTHC ... LR

Slim-line carriage, extended length, extended height

Carriages from size 20 to 30 are also available with low friction S0 shield. Dimensions are the same as standard version. For designation, refer to *Ordering key carriages* (→ **page 30**).




| Size | Accuracy class | Designation [1] Preload class T0 | T1 | T2 |
|---|---|---|---|---|
| – | | – | | |
| **20** | P5 | LLTHC 20 LR T0 P5 | LLTHC 20 LR T1 P5 | LLTHC 20 LR T2 P5 |
| | P3 | LLTHC 20 LR T0 P3 | LLTHC 20 LR T1 P3 | LLTHC 20 LR T2 P3 |
| | P1 | | LLTHC 20 LR T1 P1 | LLTHC 20 LR T2 P1 |
| **25** | P5 | LLTHC 25 LR T0 P5 | LLTHC 25 LR T1 P5 | LLTHC 25 LR T2 P5 |
| | P3 | LLTHC 25 LR T0 P3 | LLTHC 25 LR T1 P3 | LLTHC 25 LR T2 P3 |
| | P1 | | LLTHC 25 LR T1 P1 | LLTHC 25 LR T2 P1 |
| **30** | P5 | LLTHC 30 LR T0 P5 | LLTHC 30 LR T1 P5 | LLTHC 30 LR T2 P5 |
| | P3 | LLTHC 30 LR T0 P3 | LLTHC 30 LR T1 P3 | LLTHC 30 LR T2 P3 |
| | P1 | | LLTHC 30 LR T1 P1 | LLTHC 30 LR T2 P1 |
| **35** | P5 | LLTHC 35 LR T0 P5 | LLTHC 35 LR T1 P5 | LLTHC 35 LR T2 P5 |
| | P3 | LLTHC 35 LR T0 P3 | LLTHC 35 LR T1 P3 | LLTHC 35 LR T2 P3 |
| | P1 | | LLTHC 35 LR T1 P1 | LLTHC 35 LR T2 P1 |
| **45** | P5 | LLTHC 45 LR T0 P5 | LLTHC 45 LR T1 P5 | LLTHC 45 LR T2 P5 |
| | P3 | LLTHC 45 LR T0 P3 | LLTHC 45 LR T1 P3 | LLTHC 45 LR T2 P3 |
| | P1 | | LLTHC 45 LR T1 P1 | LLTHC 45 LR T2 P1 |

[1] ■ **Preferred range.**
■ **Only available as system.**
For designation, please refer to designation system.

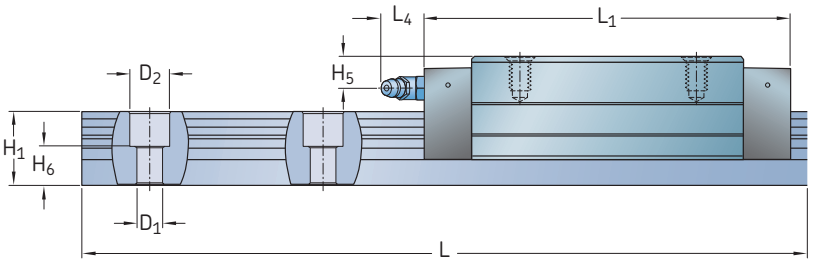


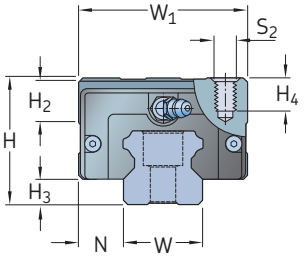


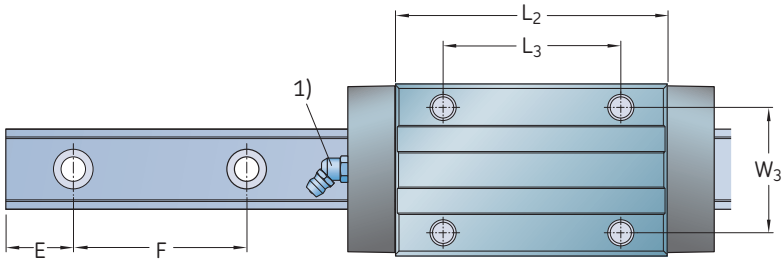


| Size | Assembly dimensions | | | | | Carriage dimensions | | | | | | | |
|---|---|---|---|---|---|---|---|---|---|---|---|---|---|
| | $W_1$ | N | H | $H_2$ | $H_3$ | $L_1$ | $L_2$ | $L_3$ | $L_4$ | $W_3$ | $H_4$ | $H_5$ | $S_2$ |
| – | mm | | | | | | | | | | | | – |
| **20** | 44 | 12 | 30 | 8,3 | 5 | 89,5 | 66,2 | 50 | 15 | 32 | 6,5 | 5,7 | M5 |
| **25** | 48 | 12,5 | 40 | 12,2 | 7 | 106,5 | 79,1 | 50 | 16,6 | 35 | 10 | 10,5 | M6 |
| **30** | 60 | 16 | 45 | 14,3 | 9 | 125,4 | 92,4 | 60 | 14,6 | 40 | 11,2 | 11 | M8 |
| **35** | 70 | 18 | 55 | 18 | 9,5 | 142,9 | 105,5 | 72 | 14,6 | 50 | 17 | 15 | M8 |
| **45** | 86 | 20,5 | 70 | 20,9 | 14 | 168,5 | 128 | 80 | 14,6 | 60 | 20,5 | 18,5 | M10 |

| Size | Rail dimensions | | | | | | | | | Weight | | Load ratings [2] | | Moments [2] | | | |
|---|---|---|---|---|---|---|---|---|---|---|---|---|---|---|---|---|---|
| | | | | | | | | | | carriage | rail | dynamic | static | dynamic | static | dynamic | static |
| | W | $H_1$ | $H_6$ | F | $D_1$ | $D_2$ | $E_{min}$ –0,75 | $E_{max}$ –0,75 | $L_{max}$ –1,5 | | | C | $C_0$ | $M_x$ | $M_{x0}$ | $M_{y/z}$ | $M_{y0/z0}$ |
| – | mm | | | | | | | | | kg | kg/m | N | | Nm | | | |
| **20** | 20 | 18 | 9,3 | 60 | 6 | 9,5 | 10 | 50 | 3 920 | 0,47 | 2,3 | 15 200 | 32 700 | 137 | 295 | 150 | 322 |
| **25** | 23 | 22 | 12,3 | 60 | 7 | 11 | 10 | 50 | 3 920 | 0,56 | 3,3 | 24 400 | 44 600 | 252 | 460 | 287 | 525 |
| **30** | 28 | 26 | 13,8 | 80 | 9 | 14 | 12 | 70 | 3 944 | 1,2 | 4,8 | 33 900 | 60 800 | 428 | 767 | 466 | 836 |
| **35** | 34 | 29 | 17 | 80 | 9 | 14 | 12 | 70 | 3 944 | 1,9 | 6,6 | 45 000 | 79 400 | 694 | 1 224 | 706 | 1 246 |
| **45** | 45 | 38 | 20,8 | 105 | 14 | 20 | 16 | 90 | 3 917 | 2,8 | 11,3 | 72 400 | 121 400 | 1 485 | 2 491 | 1 376 | 2 308 |

[1] For detailed information on grease nipples, please refer to **page 27.**
[2] Dynamic load capacities and moments are based on a travel life of 100 km. Please refer to **page 9** for further details.

# LLTHR rails

Rails are supplied with protective plastic caps for mounting from above. For designation, refer to *Ordering key rails* (→ **page 31**).

**Note:** If a rail length is required that exceeds the maximum length available, jointed rails can be ordered. These rails are manufactured so they match seamlessly to each other.




| Standard rail size | Accuracy class | Designation [1] One-piece rail | Multi–piece rail | Pitch F |
|---|---|---|---|---|
| – | – | – | | mm |
| **15** | P5 | LLTHR 15 - ... P5 | LLTHR 15 - ... P5 A | 60 |
| | P3 | LLTHR 15 - ... P3 | LLTHR 15 - ... P3 A | |
| | P1 | **LLTHR 15 - ... P1** | **LLTHR 15 - ... P1 A** | |
| **20** | P5 | LLTHR 20 - ... P5 | LLTHR 20 - ... P5 A | 60 |
| | P3 | LLTHR 20 - ... P3 | LLTHR 20 - ... P3 A | |
| | P1 | **LLTHR 20 - ... P1** | **LLTHR 20 - ... P1 A** | |
| **25** | P5 | LLTHR 25 - ... P5 | LLTHR 25 - ... P5 A | 60 |
| | P3 | LLTHR 25 - ... P3 | LLTHR 25 - ... P3 A | |
| | P1 | **LLTHR 25 - ... P1** | **LLTHR 25 - ... P1 A** | |
| **30** | P5 | LLTHR 30 - ... P5 | LLTHR 30 - ... P5 A | 80 |
| | P3 | LLTHR 30 - ... P3 | LLTHR 30 - ... P3 A | |
| | P1 | **LLTHR 30 - ... P1** | **LLTHR 30 - ... P1 A** | |
| **35** | P5 | LLTHR 35 - ... P5 | LLTHR 35 - ... P5 A | 80 |
| | P3 | LLTHR 35 - ... P3 | LLTHR 35 - ... P3 A | |
| | P1 | **LLTHR 35 - ... P1** | **LLTHR 35 - ... P1 A** | |
| **45** | P5 | LLTHR 45 - ... P5 | LLTHR 45 - ... P5 A | 105 |
| | P3 | LLTHR 45 - ... P3 | LLTHR 45 - ... P3 A | |
| | P1 | **LLTHR 45 - ... P1** | **LLTHR 45 - ... P1 A** | |

[1] ■ **Preferred range**,
■ **Only available as system.**
replace "..." by rail length in mm, e. g. LLTHR 15 - 1000 P5

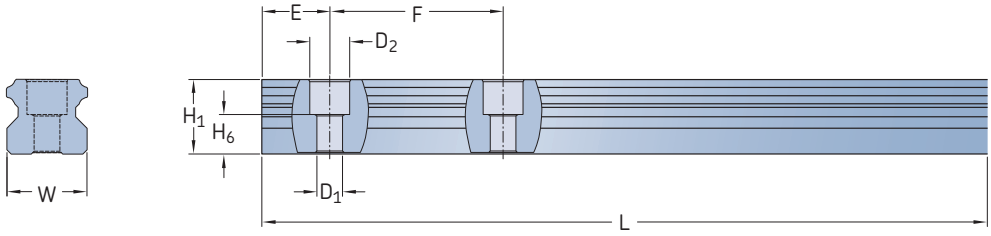


| Size | Dimensions | | | | | | | | | Weight |
|---|---|---|---|---|---|---|---|---|---|---|
| | W | $H_1$ | $H_6$ | $D_1$ | $D_2$ | $E_{min}$ –0,75 | $E_{max}$ –0,75 | F | $L_{max}$ –1,5 | |
| – | mm | | | | | | | | | kg/m |
| **15** | 15 | 14 | 8,5 | 4,5 | 7,5 | 10 | 50 | 60 | 3 920 | 1,4 |
| **20** | 20 | 18 | 9,3 | 6 | 9,5 | 10 | 50 | 60 | 3 920 | 2,3 |
| **25** | 23 | 22 | 12,3 | 7 | 11 | 10 | 50 | 60 | 3 920 | 3,3 |
| **30** | 28 | 26 | 13,8 | 9 | 14 | 12 | 70 | 80 | 3 944 | 4,8 |
| **35** | 34 | 29 | 17 | 9 | 14 | 12 | 70 | 80 | 3 944 | 6,6 |
| **45** | 45 | 38 | 20,8 | 14 | 20 | 16 | 90 | 105 | 3 917 | 11,3 |

The "E" dimension designates the distance from the rail end to centre of the first attachment hole. If no specific "E" dimension is provided by the customer with the order, the rails are produced according to the following formulae:

**Calculation of number of attachment holes in rail guide**

(**1**) $n_{real} = \frac{L}{F}$

(**2**) Round down of $n_{real}$ to n

(**3**) n + 1 = z

F = Distance of attachment holes
L = Rail length
$n_{real}$ = Real calculation value for number of hole distances
z = Number of attachment holes in rail

**Determination of E dimension based on z**

(**4**) $E_{real} = \frac{L - F\,(z-1)}{2}$

$E_{real}$ = Real calculation value for E-dimension
$E_{min}$ = Minimum E-dimension according to catalogue

**Comparison with catalogue value of $E_{min}$**

(**4.1**) If $E_{real} \geq E_{min}$
→ Usage of $E_{real}$ from **formula 4**

(**4.2**) If $E_{real} < E_{min}$
→ Calculation of $E_{real}$ according to **formula 5**

(**5**) $E_{real} = \frac{L - F\,(z-2)}{2}$

# LLTHR ... D4 rails

For mounting from below. For designation, refer to *Ordering key rails* (→ **page 31**).

**Note:** If a rail length is required that exceeds the maximum length available, jointed rails can be ordered. These rails are manufactured so they match seamlessly to each other.




| Standard rail size | Accuracy class | Designation [1] One-piece rail | Multi–piece rail | Pitch F |
|---|---|---|---|---|
| – | – | – | | mm |
| **15** | P5 D4 | LLTHR 15 - ... P5 D4 | LLTHR 15 - ... P5 A D4 | 60 |
| | P3 D4 | LLTHR 15 - ... P3 D4 | LLTHR 15 - ... P3 A D4 | |
| | P1 D4 | **LLTHR 15 - ... P1 D4** | **LLTHR 15 - ... P1 A D4** | |
| **20** | P5 D4 | LLTHR 20 - ... P5 D4 | LLTHR 20 - ... P5 A D4 | 60 |
| | P3 D4 | LLTHR 20 - ... P3 D4 | LLTHR 20 - ... P3 A D4 | |
| | P1 D4 | **LLTHR 20 - ... P1 D4** | **LLTHR 20 - ... P1 A D4** | |
| **25** | P5 D4 | LLTHR 25 - ... P5 D4 | LLTHR 25 - ... P5 A D4 | 60 |
| | P3 D4 | LLTHR 25 - ... P3 D4 | LLTHR 25 - ... P3 A D4 | |
| | P1 D4 | **LLTHR 25 - ... P1 D4** | **LLTHR 25 - ... P1 A D4** | |
| **30** | P5 D4 | LLTHR 30 - ... P5 D4 | LLTHR 30 - ... P5 A D4 | 80 |
| | P3 D4 | LLTHR 30 - ... P3 D4 | LLTHR 30 - ... P3 A D4 | |
| | P1 D4 | **LLTHR 30 - ... P1 D4** | **LLTHR 30 - ... P1 A D4** | |
| **35** | P5 D4 | LLTHR 35 - ... P5 D4 | LLTHR 35 - ... P5 A D4 | 80 |
| | P3 D4 | LLTHR 35 - ... P3 D4 | LLTHR 35 - ... P3 A D4 | |
| | P1 D4 | **LLTHR 35 - ... P1 D4** | **LLTHR 35 - ... P1 A D4** | |
| **45** | P5 D4 | LLTHR 45 - ... P5 D4 | LLTHR 45 - ... P5 A D4 | 105 |
| | P3 D4 | LLTHR 45 - ... P3 D4 | LLTHR 45 - ... P3 A D4 | |
| | P1 D4 | **LLTHR 45 - ... P1 D4** | **LLTHR 45 - ... P1 A D4** | |

[1] ■ **Preferred range**,
■ **Only available as system.**
replace "..." by rail length in mm, e. g. LLTHR 15 - 1000 P5 D4

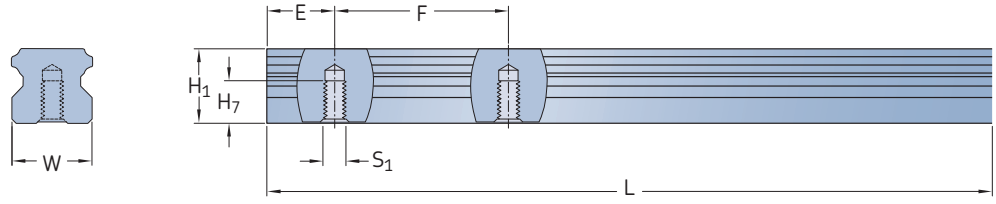


| Size | Dimensions | | | | | | | | Weight |
|---|---|---|---|---|---|---|---|---|---|
| | W | $H_1$ | $H_7$ | $S_1$ | $E_{min}$ –0,75 | $E_{max}$ –0,75 | F | $L_{max}$ –1,5 | |
| – | mm | | | | | | | | kg/m |
| **15** | 15 | 14 | 8 | M5 | 10 | 50 | 60 | 3 920 | 1,4 |
| **20** | 20 | 18 | 10 | M6 | 10 | 50 | 60 | 3 920 | 2,4 |
| **25** | 23 | 22 | 12 | M6 | 10 | 50 | 60 | 3 920 | 3,4 |
| **30** | 28 | 26 | 15 | M8 | 12 | 70 | 80 | 3 944 | 5,0 |
| **35** | 34 | 29 | 17 | M8 | 12 | 70 | 80 | 3 944 | 6,8 |
| **45** | 45 | 38 | 24 | M12 | 16 | 90 | 105 | 3 917 | 11,8 |

The "E" dimension designates the distance from the rail end to centre of the first attachment hole. If no specific "E" dimension is provided by the customer with the order, the rails are produced according to the following formulae:

**Calculation of number of attachment holes in rail guide**

(**1**) $n_{real} = \frac{L}{F}$

(**2**) Round down of $n_{real}$ to n

(**3**) n + 1 = z

F = Distance of attachment holes
L = Rail length
$n_{real}$ = Real calculation value for number of hole distances
z = Number of attachment holes in rail

**Determination of E dimension based on z**

(**4**) $E_{real} = \frac{L - F\,(z-1)}{2}$

$E_{real}$ = Real calculation value for E-dimension
$E_{min}$ = Minimum E-dimension according to catalogue

**Comparison with catalogue value of $E_{min}$**

(**4.1**) If $E_{real} \geq E_{min}$
→ Usage of $E_{real}$ from **formula 4**

(**4.2**) If $E_{real} < E_{min}$
→ Calculation of $E_{real}$ according to **formula 5**

(**5**) $E_{real} = \frac{L - F\,(z-2)}{2}$

# LLTHR ... D6 rails

Rails are supplied with protective plastic caps for mounting from above. For designation, refer to *Ordering key rails* (→ **page 31**).

Protective metal plugs ensure that no residues of dirt, swarf, cooling water and other contaminants remain in the area of the attachment holes. After insertion, these plugs align flush with the surface of the profile rail guide to provide effective wiping. The use of additional scraper plates in combination with these protective metal plugs is an option which will further enhance protection (→ **page 59**).

**Note:** If a rail length is required that exceeds the maximum length available, jointed rails can be ordered. These rails are manufactured so they match seamlessly to each other.

Size-specific mounting tools from SKF are needed for installing the protective metal plugs. Please refer to **page 31** for ordering the mounting tool.




| Standard rail size | Accuracy class | Designation [1] One-piece rail | Multi–piece rail | Pitch F |
|---|---|---|---|---|
| – | – | – | | mm |
| **25** | P5 | LLTHR 25 - ... P5 D6 | LLTHR 25 - ... P5 A D6 | 60 |
| | P3 | LLTHR 25 - ... P3 D6 | LLTHR 25 - ... P3 A D6 | |
| | P1 | **LLTHR 25 - ... P1 D6** | **LLTHR 25 - ... P1 A D6** | |
| **30** | P5 | LLTHR 30 - ... P5 D6 | LLTHR 30 - ... P5 A D6 | 80 |
| | P3 | LLTHR 30 - ... P3 D6 | LLTHR 30 - ... P3 A D6 | |
| | P1 | **LLTHR 30 - ... P1 D6** | **LLTHR 30 - ... P1 A D6** | |
| **35** | P5 | LLTHR 35 - ... P5 D6 | LLTHR 35 - ... P5 A D6 | 80 |
| | P3 | LLTHR 35 - ... P3 D6 | LLTHR 35 - ... P3 A D6 | |
| | P1 | **LLTHR 35 - ... P1 D6** | **LLTHR 35 - ... P1 A D6** | |
| **45** | P5 | LLTHR 45 - ... P5 D6 | LLTHR 45 - ... P5 A D6 | 105 |
| | P3 | LLTHR 45 - ... P3 D6 | LLTHR 45 - ... P3 A D6 | |
| | P1 | **LLTHR 45 - ... P1 D6** | **LLTHR 45 - ... P1 A D6** | |

**Mounting tool for installing protective metal plugs**

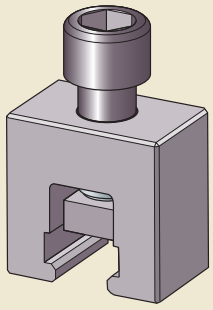

Please refer to **page 31** for ordering the mounting tool.

[1] ■ **Preferred range**
■ **Only available as system**.
replace "..." by rail length in mm, e.g. LLTHR 15 - 1000 P5 D6

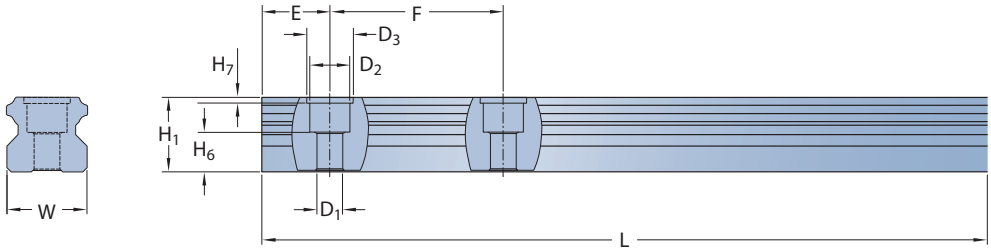


| Size | Dimensions | | | | | | | | | | | Weight |
|---|---|---|---|---|---|---|---|---|---|---|---|---|
| | W | $H_1$ | $H_6$ | $H_7$ | $D_1$ | $D_2$ | $D_3$ | $E_{min}$ –0,75 | $E_{max}$ –0,75 | F | $L_{max}$ –1,5 | |
| – | mm | | | | | | | | | | | kg/m |
| **25** | 23 | 22 | 12,3 | 2,2 | 7 | 11 | 13 | 10 | 50 | 60 | 3 920 | 3,3 |
| **30** | 28 | 26 | 13,8 | 2,2 | 9 | 14 | 16 | 12 | 70 | 80 | 3 944 | 4,8 |
| **35** | 34 | 29 | 17 | 2,2 | 9 | 14 | 16 | 12 | 70 | 80 | 3 944 | 6,6 |
| **45** | 45 | 38 | 20,8 | 2,2 | 14 | 20 | 25 | 16 | 90 | 105 | 3 917 | 11,3 |

The "E" dimension designates the distance from the rail end to centre of the first attachment hole. If no specific "E" dimension is provided by the customer with the order, the rails are produced according to the following formulae:

**Calculation of number of attachment holes in rail guide**

(**1**) $n_{real} = \frac{L}{F}$

(**2**) Round down of $n_{real}$ to n

(**3**) n + 1 = z

F = Distance of attachment holes
L = Rail length
$n_{real}$ = Real calculation value for number of hole distances
z = Number of attachment holes in rail

**Determination of E dimension based on z**

(**4**) $E_{real} = \frac{L - F\,(z-1)}{2}$

$E_{real}$ = Real calculation value for E-dimension
$E_{min}$ = Minimum E-dimension according to catalogue

**Comparison with catalogue value of $E_{min}$**

(**4.1**) If $E_{real} \geq E_{min}$
→ Usage of $E_{real}$ from **formula 4**

(**4.2**) If $E_{real} < E_{min}$
→ Calculation of $E_{real}$ according to **formula 5**

(**5**) $E_{real} = \frac{L - F\,(z-2)}{2}$

## Jointed rail tracks

If the requested rail length exceeds the available delivery length of LLT rails, specially paired and jointed rails can be supplied as ready-to-mount sets consisting of two or more rails (per rail track). In this case, the rails are marked in order to avoid mix-up during mounting. For specific dimensions of the joint(s), please add a drawing. The maximum length for a deliverable rail track is 50 m. Please contact SKF to inquire about longer individual rail tracks. If replacement is required, the complete set should be exchanged to provide full functionality.

For designation, refer to *Ordering key rails* (→ **page 31**).

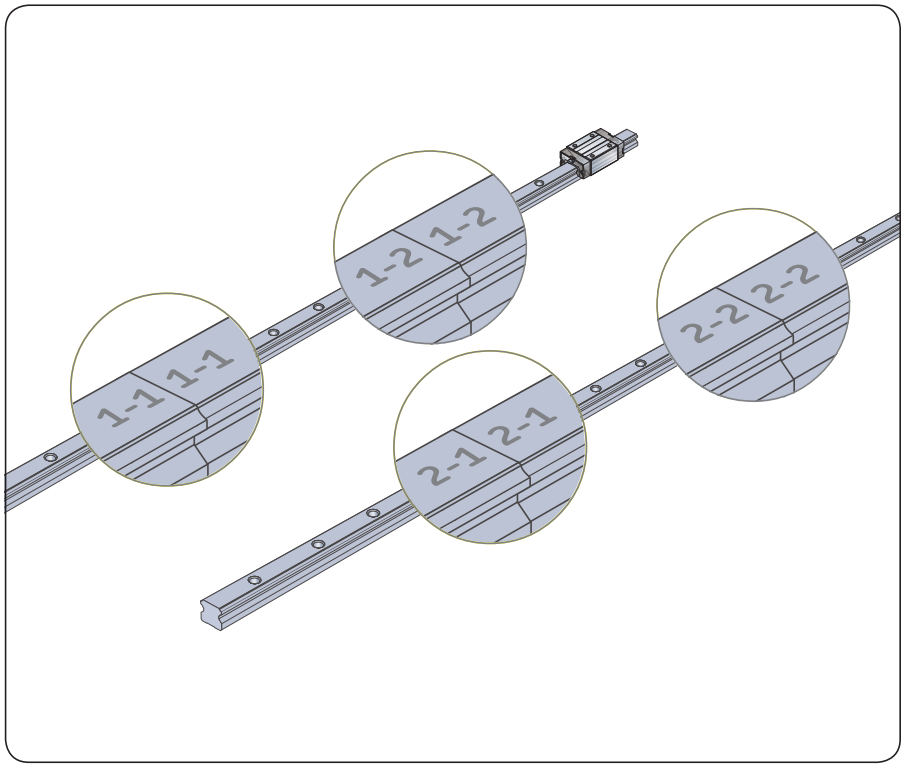

5 [mm]

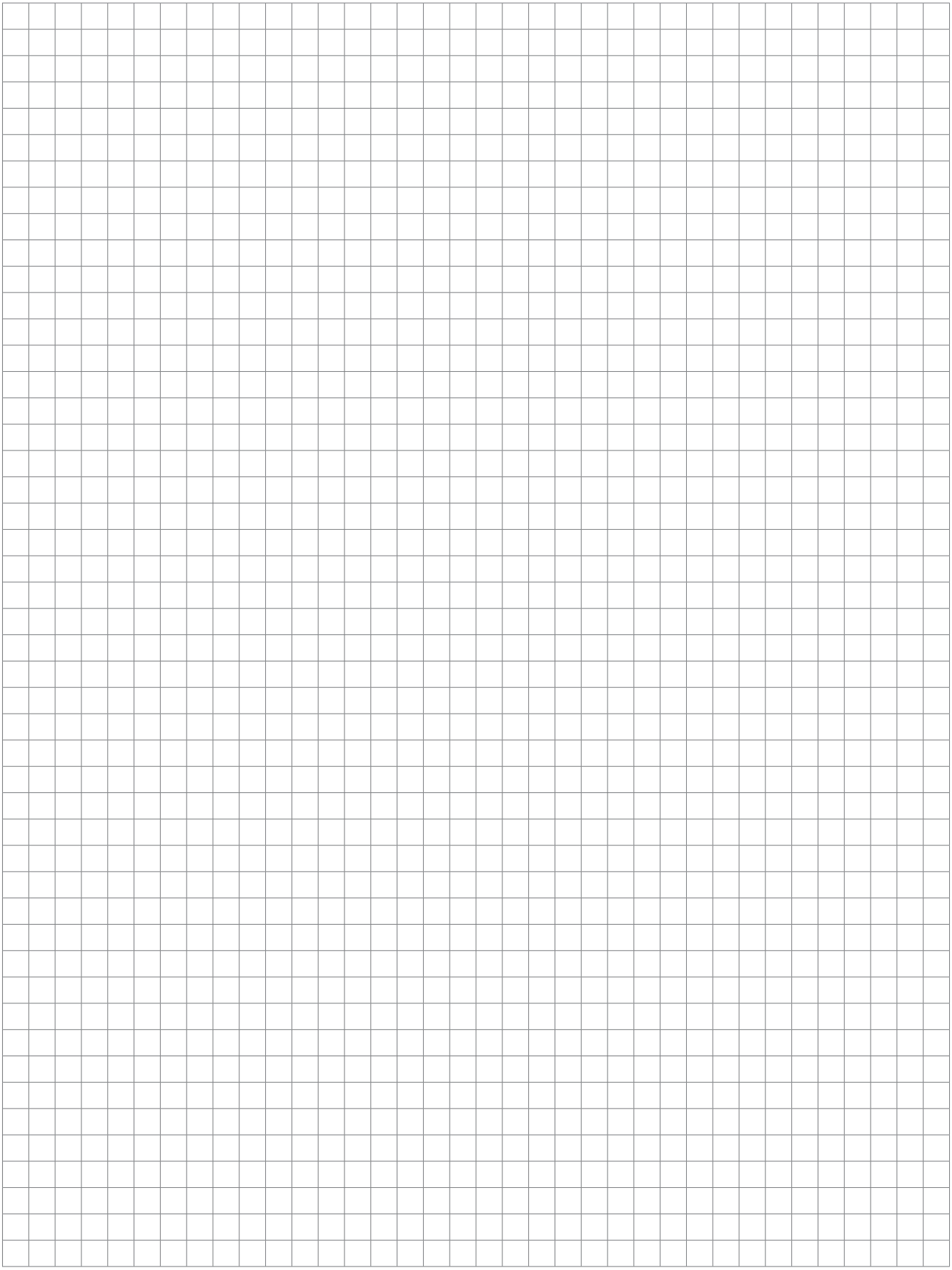

# Accessories

**Accessories**

| Item name | Illustration[1)] | Purpose |
|---|---|---|
| **Scraper plate**<br>LLTHZ ... S1 | 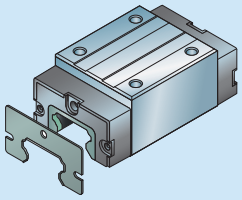 | Scraper plates are spring-steel, non-contact components. They protect the front seal from coarse contaminants or hot metal chips. |
| **Additional front seal**<br>LLTHZ ... S7 | 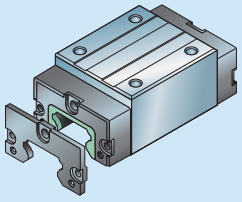 | Additional front seals are contact seals that can be attached to the carriage end faces. They are single-lip seals consisting of special heavy-duty material and offer additional protection against liquids and smaller contaminants. An additional front seal, in combination with carriages equipped with a low friction S0 shield, result in a sealed system with lower friction. |
| **Seal kit**<br>LLTHZ ... S3 | 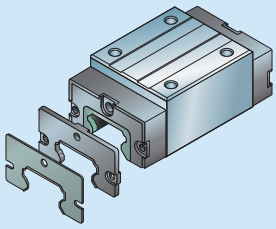 | The seal kit consists of a metal scraper and an additional front seal. It is intended for applications involving exposure to coarse and fine dirt as well as liquids. |
| **Bellows**<br>LLTHZ ... B | 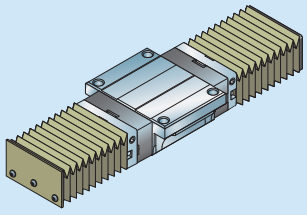 | Bellows protect the entire system against solid and liquid contaminants from above. They are suitable for highly contaminated environments like machining centres in the woodworking and metals industries. |
| **Adapter plate**<br>LLTHZ ... PL | 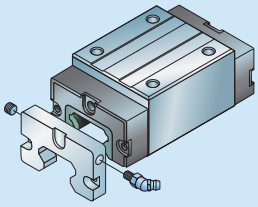 | Adapter plates provide a side lubrication point, either for a grease nipple or for central lubrication systems. The interface of the adapter plate is the same on both sides. The adapter plate can be mounted on both end sides of the carriage. Usually only one adapter plate is used per carriage. Please note that this accessory is also part of the bellow sets. |
| **Lubrication connector**<br>LLTHZ ... VNUA | 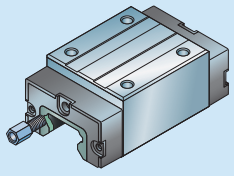 | The lubrication connector is used to provide an interface for central lubrication systems. The lubrication connector can be mounted on both end sides of the carriage. Usually only one lubrication connector is used per carriage. Please note that the lubrication connector cannot be used in combination with additional seals (scraper plate, additional front seal, seal kit). |

[1)] Appearance can vary slightly depending on the size.

# Scraper plate

- Material: spring steel according to DIN EN 10088
- Appearance: black
- Designed with a specified maximum gap of 0,2 to 0,3 mm

### Mounting

Mounting screws and grease nipple are included. When mounting, be sure there is an even space between the rail and scraper plate.

**Note:** Can be ordered in combination with an additional front seal as a kit. For designation, refer to *Ordering key accessories* (→ **page 31**).

**Scraper plate**

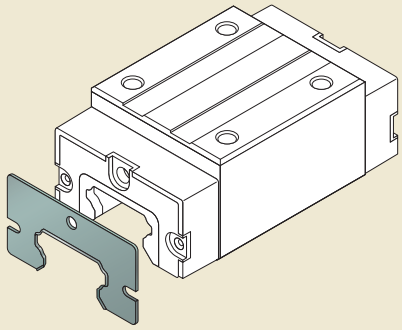

Appearance can vary slightly depending on the size.

**Scraper plate**

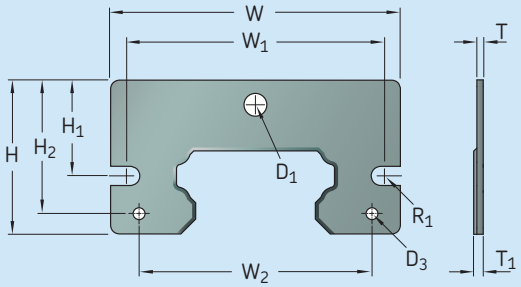


| Size | Part designation | Dimensions | | | | | | | | | | |
|---|---|---|---|---|---|---|---|---|---|---|---|---|
| | | $D_1$ | $D_3$ | $R_1$ | W | $W_1$ | $W_2$ | H | $H_1$ | $H_2$ | T | $T_1$ max |
| – | – | mm | | | | | | | | | | |
| **15** | **LLTHZ 15 S1** | 3,6 | – | 1,75 | 31,6 | 25,8 | – | 18,5 | 12 | – | 1,5 | 1,8 |
| **20** | **LLTHZ 20 S1** | 5,5 | – | 1,75 | 42,6 | 35 | – | 24,2 | 14,8 | – | 1,5 | 1,8 |
| **25** | **LLTHZ 25 S1** | 5,5 | – | 2,25 | 46,6 | 39,6 | – | 27,7 | 16,8 | – | 1,5 | 1,8 |
| **30** | **LLTHZ 30 S1** | 6,5 | – | 1,75 | 57 | 50 | – | 30,4 | 19,3 | – | 1,5 | 1,8 |
| **35** | **LLTHZ 35 S1** | 6,5 | 3,4 | 2,25 | 67,3 | 59,2 | 52 | 36,3 | 22,1 | 30,1 | 1,5 | 1,8 |
| **45** | **LLTHZ 45 S1** | 6,5 | 3,4 | 2,75 | 83,3 | 72 | 67 | 44,2 | 27,5 | 38,3 | 1,5 | 1,8 |

# Additional front seal

- Material: Elastomer
- Design: single-lip seal

### Mounting

Mounting screws and grease nipple are included.

**Note:** Can be ordered in combination with a scraper plate as a kit. For designation, refer to *Ordering key accessories* (→ **page 31**).

An additional front seal in combination with carriages equipped with low friction S0 shield results in a sealed system with lower friction.

**Front seal**

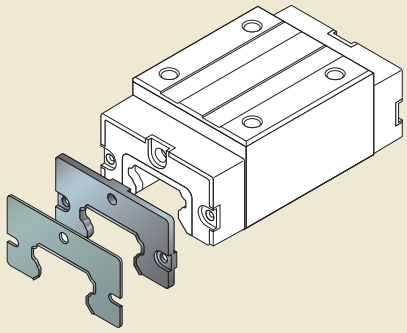

Appearance can vary slightly depending on the size.

**Additional front seal**

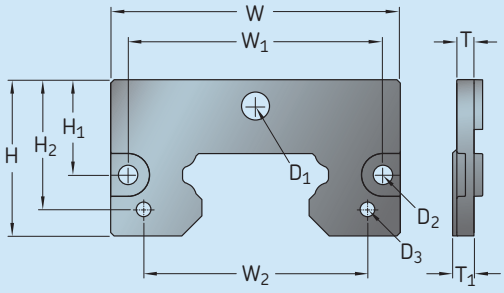


| Size | Part designation | Dimensions | | | | | | | | | | |
|---|---|---|---|---|---|---|---|---|---|---|---|---|
| | | $D_1$ | $D_2$ | $D_3$ | W | $W_1$ | $W_2$ | H | $H_1$ | $H_2$ | T | $T_1$ |
| – | – | mm | | | | | | | | | | |
| **15** | **LLTHZ 15 S7** | 3,6 | 3,4 | – | 31,6 | 25,8 | – | 18,5 | 12 | – | 3 | 4 |
| **20** | **LLTHZ 20 S7** | 5,5 | 3,4 | – | 42,6 | 35 | – | 24,2 | 14,8 | – | 3 | 4 |
| **25** | **LLTHZ 25 S7** | 5,5 | 4,5 | – | 46,6 | 39,6 | – | 27,7 | 16,8 | – | 3 | 4 |
| **30** | **LLTHZ 30 S7** | 6,5 | 3,4 | – | 57,9 | 50 | – | 31,5 | 19.3 | – | 4 | 5 |
| **35** | **LLTHZ 35 S7** | 6,5 | 4,5 | 3,4 | 67,3 | 59,2 | 52 | 36,3 | 22,1 | 30,1 | 4 | 5 |
| **45** | **LLTHZ 45 S7** | 6,5 | 5,5 | 3,4 | 83,3 | 72 | 67 | 44,2 | 27,5 | 38,3 | 4 | 5 |

# Seal kit

The seal kit consists of the following components:

- Scraper plate
- Additional front seal

Mounting screws and grease nipple are included. For designation, refer to *Ordering key accessories* (→ **page 31**).

**Seal kit**

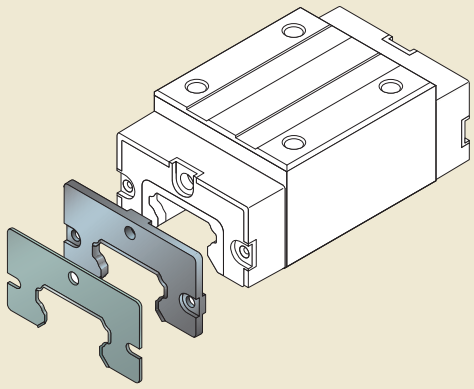

Appearance can vary slightly depending on the size.

**Seal kit**

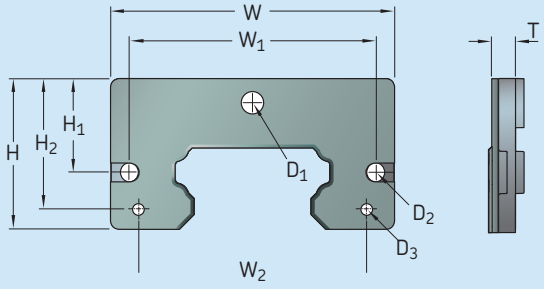


| Size | Part designation | Dimensions | | | | | | | | | |
|---|---|---|---|---|---|---|---|---|---|---|---|
| | | $D_1$ | $D_2$ | $D_3$ | W | $W_1$ | $W_2$ | H | $H_1$ | $H_2$ | T |
| – | – | mm | | | | | | | | | |
| **15** | **LLTHZ 15 S3** | 3,6 | 3,4 | – | 31,6 | 25,8 | – | 18,5 | 12 | – | 4 |
| **20** | **LLTHZ 20 S3** | 5,5 | 3,4 | – | 42,6 | 35 | – | 24,2 | 14,8 | – | 4 |
| **25** | **LLTHZ 25 S3** | 5,5 | 4,5 | – | 46,6 | 39,6 | – | 27,7 | 16,8 | – | 4 |
| **30** | **LLTHZ 30 S3** | 6,5 | 3,4 | – | 57,9 | 50 | – | 31,5 | 19,3 | – | 5 |
| **35** | **LLTHZ 35 S3** | 6,5 | 4,5 | 3,4 | 67,3 | 59,2 | 52 | 36,3 | 22,1 | 30,1 | 5 |
| **45** | **LLTHZ 45 S3** | 6,5 | 5,5 | 3,4 | 83,3 | 72 | 67 | 44,2 | 27,5 | 38,3 | 5 |

# Adapter plate

- Material: Aluminium
- Appearance: Natural aluminium, non-anodized

### Mounting

Mounting screws and grease nipple are included. For designation, refer to *Ordering key accessories* (→ **page 31**).

**Adapter plate**

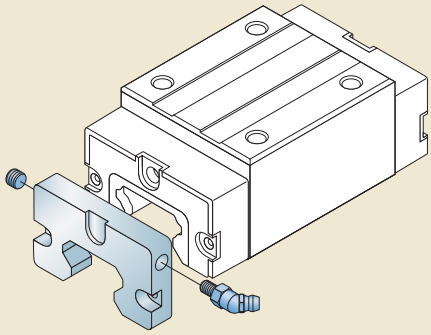

Appearance can vary slightly depending on the size.

**Adapter plate**

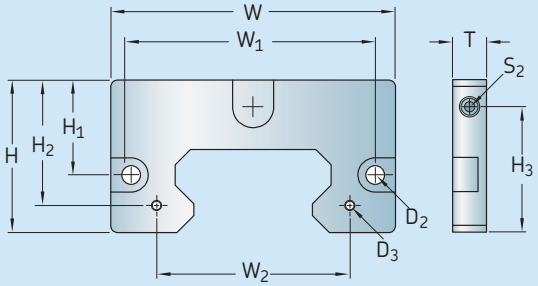


| Size | Part designation | Dimensions | | | | | | | | | | |
|---|---|---|---|---|---|---|---|---|---|---|---|---|
| | | $S_2$ | $D_2$ | $D_3$ | W | $W_1$ | $W_2$ | H | $H_1$ | $H_2$ | $H_3$ | T |
| – | – | mm | | | | | | | | | | |
| **15** | **LLTHZ 15 PL** | M5 | 3,4 | M2 | 32 | 25,8 | 20 | 18,9 | 12,2 | 16,4 | 13,7 | 10 |
| **20** | **LLTHZ 20 PL** | M5 | 3,4 | M3 | 43 | 35 | 28 | 24,5 | 15 | 20 | 17,5 | 10 |
| **25** | **LLTHZ 25 PL** | M5 | 4,5 | M3 | 47 | 39,6 | 32 | 28 | 17 | 23 | 22,5 | 10 |
| **30** | **LLTHZ 30 PL** | M6 | 3,5 | M3 | 58,5 | 50 | 38 | 32 | 19,5 | 26 | 25 | 10 |
| **35** | **LLTHZ 35 PL** | M6 | 4,5 | M3 | 68 | 59,2 | 45 | 37 | 22,5 | 29,5 | 30 | 10 |
| **45** | **LLTHZ 45 PL** | M6 | 5,5 | M3 | 84 | 72 | 57 | 45 | 28 | 37 | 37 | 10 |

# Lubrication connector

- Material: Steel, alternative brass
- Appearance: Hard chromed

### Mounting

To be used with central lubrication systems. See *SKF Lubrication Solutions* at www.skf.com. For designation, refer to *Ordering key accessories* (→ **page 31**).

**Note:** The lubrication connector cannot be used in combination with additional seals (scraper plate, additional front seal, seal kit).

**Lubrication connector**

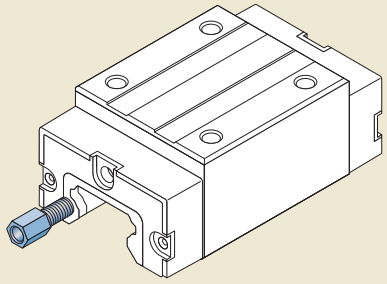

Appearance can vary slightly depending on the size.

**Lubrication connector**

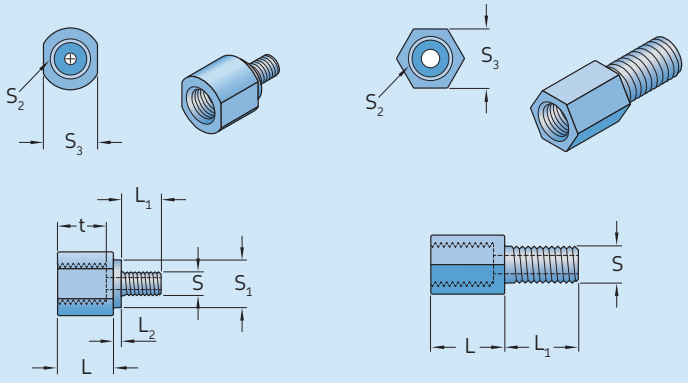


| Size | Part designation | Dimensions | | | | | | | |
|---|---|---|---|---|---|---|---|---|---|
| | | L | $L_1$ | $L_2$ | S | $S_1$ | $S_2$ | t | $S_3$ |
| – | – | mm | | | | | | | |
| **15** | **LLTHZ 15 VN UA** | 7 | 5 | 1 | M3 | 6 | M5 | 5 | 7 |
| **20** | **LLTHZ 20 VN UA** | 10 | 8 | – | M5 | – | M6 | 7 | 8 |
| **25** | **LLTHZ 25 VN UA** | 10 | 10 | – | M5 | – | M6 | 7 | 8 |
| **30** | **LLTHZ 30 VN UA** | 10,5 | 12 | – | M6 | – | M6 | 8 | 8 |
| **35** | **LLTHZ 35 VN UA** | 10,5 | 12 | – | M6 | – | M6 | 8 | 8 |
| **45** | **LLTHZ 45 VN UA** | 10,5 | 12 | – | M6 | – | M6 | 8 | 8 |

# Bellows

## Temperature resistance

$t_{max}$ = 90 °C.
During continuous operation, the permissible operating temperature is between –20 and 80 °C. Special materials for higher temperature resistance are available.

Special material LAS: available for size 15–30. Temperature limit is 160 °C for a very short period.

Special material WEL: available for size 35–45. Temperature limit is 260 °C for a very short period.

For all applications, please note the maximum temperature range for LLT systems (→ **page 11**).

## Material

Bellows are made of polyester fabric with a polyurethane coating. Adapter plates are made of aluminium.

## Bellows kit contents (→ fig. 1)

**1** Adapter plate
**2** Grease nipple
**3** Sealing ring
**4** Set screw
**5** Mounting screws
**6** Bellows with all plates

**Note:** rail ends must be prepared with threaded holes.

**Fig. 1**

**Delivery scope**

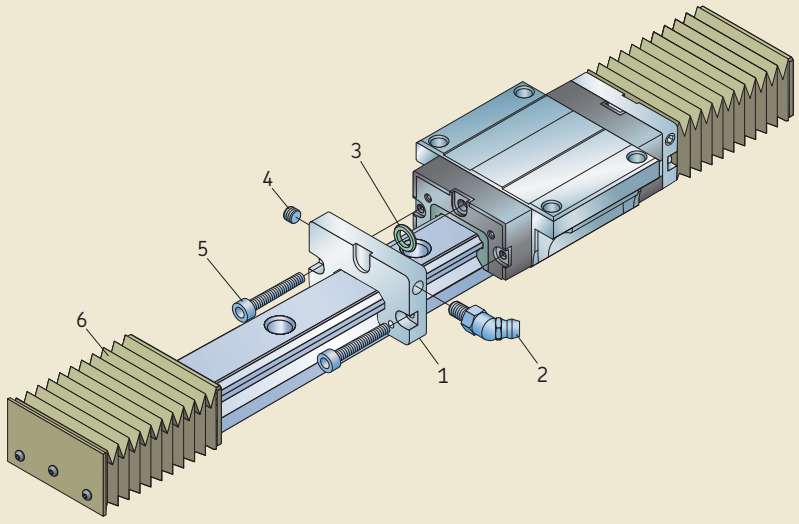


**Table 1**

**Bellows designations**[1)]

| Size |  **Type 2** with adapter plates for the carriage and end plate for the rail |  **Type 4** with two adapter plates for the carriages |  **Type 9** loose bellows (spare part) |
|---|---|---|---|
| – | – | | |
| **15** | LLTHZ 15 B2 .. | LLTHZ 15 B4 .. | LLTHZ 15 .. B9 |
| **20** | LLTHZ 20 B2 .. | LLTHZ 20 B4 .. | LLTHZ 20 .. B9 |
| **25** | LLTHZ 25 B2 .. | LLTHZ 25 B4 .. | LLTHZ 25 .. B9 |
| **30** | LLTHZ 30 B2 .. | LLTHZ 30 B4 .. | LLTHZ 30 .. B9 |
| **35** | LLTHZ 35 B2 .. | LLTHZ 35 B4 .. | LLTHZ 35 .. B9 |
| **45** | LLTHZ 45 B2 .. | LLTHZ 45 B4 .. | LLTHZ 45 .. B9 |

[1)] Replace ".." by number of folds per bellow.

## Mounting

The bellows are delivered unmounted with mounting screws and necessary plates.

**Note:** Prior to mounting, the grease nipples on the carriage must be removed.

For bellow arrangement type 2 (→ **table 1**), the end faces of the rails have to be equipped with threaded attachment holes.

## Calculation of the bellows type 2[1)]

$$n = \frac{L - L_A}{W_{4\,min} + W_{4\,max}} + F$$

## Calculation of the rail length

$L = (n - F)(W_{4\,min} + W_{4\,max}) + L_A$

$L_{min} = n\, W_{4\,min}$
$L_{max} = n\, W_{4\,max}$
Stroke $= n\, S_F$

rail length < 500 mm F=2
500 mm < rail length < 1 000 mm F=3
rail length > 1000 mm F=4

where
$L_A$ = Carriage length $L_1$ (please refer to the dimension tables of the carriages) plus 2 × 10 mm for the adapter plates.
$L$ = Rail length [mm]
$L_{max}$ = Bellow stretched
$L_{min}$ = Bellow pushed together
$n$ = Total number of folds per carriage side
$S_F$ = Stroke per fold
$S_F = W_{4max} - W_{4min}$ [mm]
Stroke = Stroke [mm]
$W_4$ = Maximum and minimum extension per fold

**Table 2**

**Dimensions of the bellows**

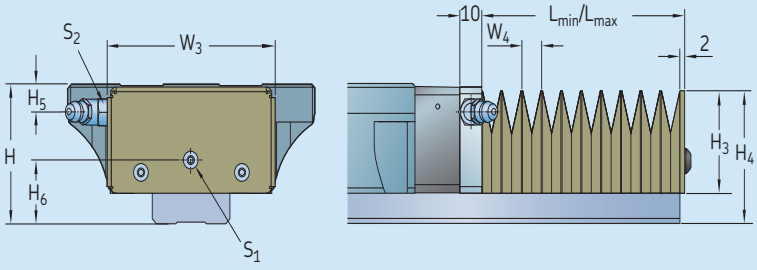


| Size | Dimensions | | | | | | | | | STD | LAS | WEL | |
|---|---|---|---|---|---|---|---|---|---|---|---|---|---|
| | $W_3$ | $H^{1)}$ | $H^{2)}$ | $H_3$ | $H_4$ | $H_5$ | $H_6$ | $S_1$ | $S_2$ | $W_{4\,min}$ | $W_{4\,min}$ | $W_{4\,min}$ | $W_{4\,max}$ [3)] |
| – | mm | | | | | | | | | | | | |
| **15** | 32 | 24 | 28 | 18,9 | 23,5 | 3,8 | 8,8 | M4 × 8 | M5 | 2,5 | 3 | – | 9,6 |
| **20** | 43 | 30 | 30 | 24,5 | 29,5 | 5,2 | 12 | M4 × 8 | M5 | 2,5 | 3 | – | 12 |
| **25** | 47 | 36 | 40 | 28 | 35 | 5,5 | 15,5 | M4 × 8 | M5 | 2,5 | 3 | – | 12 |
| **30** | 58 | 42 | 45 | 32 | 41 | 7 | 19 | M4 × 8 | M6 | 2,5 | 3 | – | 16,9 |
| **35** | 68 | 48 | 55 | 37 | 47 | 6,5 | 21,5 | M4 × 8 | M6 | 2,5 | – | 4 | 21 |
| **45** | 84 | 60 | 70 | 45 | 59 | 7,5 | 28,5 | M4 × 8 | M6 | 2,5 | – | 4 | 25,2 |

1) For carriages of type SA, A, LA, SU, U, LU
2) For carriages of type R, LR
3) $W_{4\,max}$ valid for all types of material (standard material, LAS, WEL)

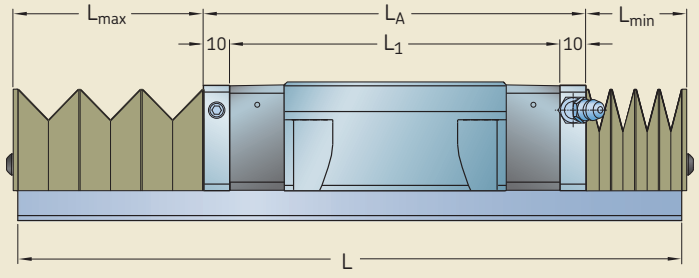


1) Calculation for maximum possible stroke. Calculation of bellow type 4 on request, specifications on stroke length required.

## Applications in corrosive environments

To ensure that LLT profile rail guides operate reliably in corrosive environments, the carriages and rails must be protected with special coatings. These coatings bring about substantial improvements in corrosion resistance and thus increase the wear resistance under critical operating conditions.

SKF protects components with the following coatings:

| | |
|---|---|
| LLTHR rails: | TDC (Thin Dense Chrome) coating |
| LLTHC carriages: | Nickel layer |

Rail: The rail features a very thin TDC layer that provides effective corrosion protection, but does not affect the load rating of the system. For technical data regarding both types of coatings, please refer to **table 1**.

This product range enables two combinations. The coated rail can be combined with both nickel-plated and standard carriages. A combination of coated rail and standard carriage can be used where the rails are exposed to slightly corrosive media only and the carriages are sufficiently shielded through the adjacent structure or other measures (e.g. machines during transport, installations in contact with weak cleaning solutions).

When used in combination with standard carriages, the catalogue load ratings can be used for the life calculation without change. For this design variant, users should bear in mind that preload increases slightly due to the layer thickness.

When using coated rails in combination with nickel-plated carriages, the load ratings for dynamic loads and moments will be reduced by 30% and for loads and moments by 20%. The preload class T1 is available as standard. Systems with coated rails can have a slightly higher preload and friction. This will be partly eliminated after a short running time.

**Availability**

- Rail sizes: 15–45
- Completely coated rails: maximum length approximately 4 000 mm
- Cut-to-length rail: standard – cut edges not coated
- Cut-to-length rail: possible – cut edges TDC coated

**Note:** Where coated LLT rails are used, glossy areas may appear on the raceways after running-in. The corrosion protection properties are not compromised.
All components are delivered with preservative ex works. The nickel-plated carriages are delivered unlubricated and must be greased by the customer prior to use and re-lubricated at regular intervals.

**Note:** The carriages of sizes 15 and 20, in combination with TDC coated rails, are supplied with a low friction S0 shield as standard. Optionally, they can also be combined with an additional S7 front seal. In these cases, a slight increase in carriage length must be taken into account (**page 60**).

**Table 1**

**Technical data and ordering designations of coated components**

| Properties | Rail | Carriage |
|---|---|---|
| Designation | LLTHR ... HD (Europe)<br>LLTHR ... HA (USA/CAN) | LLTHC ... A HN<br>LLTHC ... R HN<br>LLTHC ... U HN |
| Coating | TDC | Nickel |
| Colour | matt grey | glossy silver |
| Layer hardness | 900 HV – 1300 HV | 800 HV |
| Corrosion protection | 72 h<br>(salt spray test DIN EN ISO 9227) | 100 h<br>(salt spray test DIN EN ISO 9227) |
| RoHS compliant | yes | yes |
| Stainless steel ball | | Material no. 1.4125 (X105CrMo17) |

# Mounting and maintenance



## General instructions

The following mounting instructions[1] are applicable to all carriage types.

To maintain the high precision of SKF LLT profile rail guides, the carriages must be handled carefully during transport and assembly..

To provide protection during transport, storage and assembly, LLT rails and carriages are supplied with a corrosion preservative. This preservative does not need to be removed if the recommended lubricants are used.

Fig. 1

**Mounting with laterally fixed rails and carriages**

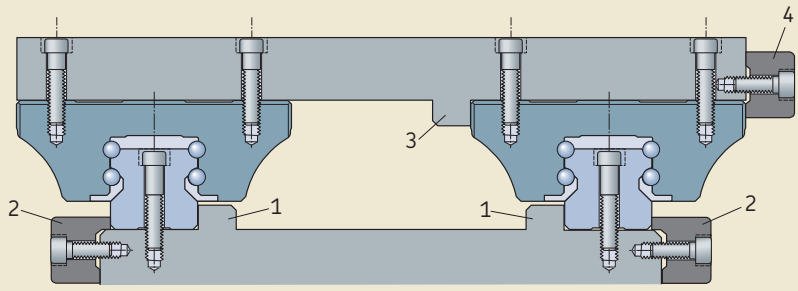


## Typical mounting examples

### Rails

Each rail has ground reference edges on both sides.

**Options for securing the rails laterally (→ fig. 1)**

**1** Stop edges
**2** Retaining strips

**Note:** Rail ends must be chamfered to prevent seal damage during installation. If two rails are to be joined, do not chamfer either of the mating ends.

Rails that are not laterally fixed must be installed straight and parallel. SKF recommends using a support strip to maintain the rail's position during installation.

Guideline values for the permissible lateral loads for unfixed rails are listed in **table 3** on **page 68**.

Fig. 2

**Mounting without lateral rail fixation**

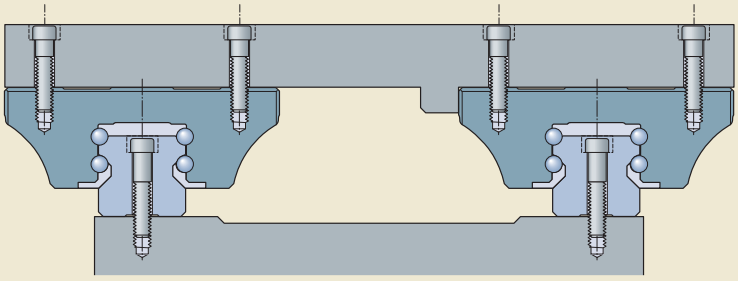

### Carriage

Each carriage has one ground reference side (please refer to dimension $H_2$ in the drawings of the carriages (**→ pages 32**).

**Options for securing the carriages laterally (→ fig. 1)**

**3** Stop edges
**4** Retaining strips

**Note:** If mounted correctly, the carriage should move easily on the rail when pushed.

During assembly, secure the carriage to prevent it from falling.

[1] For detailed information please download "Mounting Instruction Profile rail guides LLT" at www.skf.com.

## Interface design, screw sizes and tightening torques

- The flange-type carriages can be fastened from above (→ **fig. 3**) and below (→ **fig. 4**)
- The slim-type carriages can be fastened from above (→ **fig. 5**)
- Rails can be fastened from both above (→ **fig. 4** and **5**) and below (→ **fig. 3**, rail type **LLTHR ... D4**).

**Fig. 3**

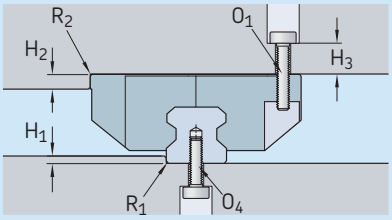


**Fig. 4**

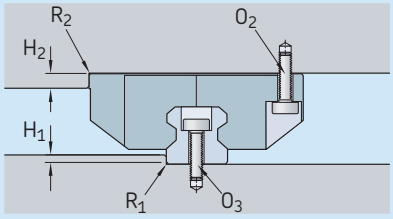


**Fig. 5**

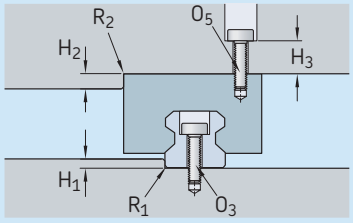


**Table 1**

**Stop edges, corner radii and screw sizes**

| Size | Dimensions | | | | | | Screw | | | | |
|---|---|---|---|---|---|---|---|---|---|---|---|
| | $H_1$ min | $H_1$ max | $R_1$ max | $H_2$ | $R_2$ max | $H_3$[1] | $O_1$ ISO 4762 | $O_2$ | $O_3$[1] | $O_4$[1] | $O_5$[2] |
| – | mm | | | | | | 4 Piece | | Rail | | |
| **15** | 2,5 | 3,5 | 0,4 | 4 | 0,6 | 6 | M5 × 12 | M4 × 12 | M4 × 20 | M5 × 12 | M4 × 12 |
| **20** | 2,5 | 4,0 | 0,6 | 5 | 0,6 | 9 | M6 × 16 | M5 × 16 | M5 × 25 | M6 × 16 | M5 × 16 |
| **25** | 3,0 | 5,0 | 0,8 | 5 | 0,8 | 10 | M8 × 20 | M6 × 18 | M6 × 30 | M6 × 20 | M6 × 18 |
| **30** | 3,0 | 5,0 | 0,8 | 6 | 0,8 | 10 | M10 × 20 | M8 × 20 | M8 × 30 | M8 × 20 | M8 × 20 |
| **35** | 3,5 | 6,0 | 0,8 | 6 | 0,8 | 13 | M10 × 25 | M8 × 25 | M8 × 35 | M8 × 25 | M8 × 25 |
| **45** | 4,5 | 8,0 | 0,8 | 8 | 0,8 | 14 | M12 × 30 | M10 ×30 | M12 × 45 | M12 × 30 | M10 × 30 |

[1] The stated values are only recommendations
[2] For carriage type SU + SA, two screws are sufficient to withstand the maximum load.

**Table 2**

**Tightening torques of mounting screws**

| Screw strength class | Screw | | | | | |
|---|---|---|---|---|---|---|
| | M4 | M5 | M6 | M8 | M10 | M12 |
| – | Nm | | | | | |
| for counterparts made out of steel or cast iron | | | | | | |
| **8.8** | 2,9 | 5,75 | 9,9 | 24 | 48 | 83 |
| **12.9** | 4,95 | 9,7 | 16,5 | 40 | 81 | 140 |
| for counterparts made out of aluminium | | | | | | |
| **8.8** | 1,93 | 3,83 | 6,6 | 16 | 32 | 55 |
| **12.9** | 3,3 | 6,47 | 11 | 27 | 54 | 93 |

**Table 3**

**Dimensions and guide values for permissible lateral forces without additional lateral support (→ fig. 2)**

| Carriages | Screw strength class | Carriages | | | Rails | |
|---|---|---|---|---|---|---|
| | | $O_1$ | $O_2$ | $O_5$ | $O_3$ | $O_4$ |
| **A, U, R** | 8.8 | 23% C | 11% C | 11% C | 6% C | 6% C |
| | 12.9 | 35% C | 18% C | 18% C | 10% C | 10% C |
| **LA, LU, LR** | 8.8 | 18% C | 8% C | 8% C | 4% C | 4% C |
| | 12.9 | 26% C | 14% C | 14% C | 7% C | 7% C |
| **SA, SU** | 8.8 | 12% C | 8% C | 8% C | 9% C | 9% C |
| | 12.9 | 21% C | 13% C | 13% C | 15% C | 15% C |

# Position tolerances of attachment holes

To ensure the interchangeability between the machine bed and the profile rail guides, it is necessary to match the positions of the corresponding attachment holes of all elements to be mounted. When observing the tolerances given in the following drawings, it is not necessary to remachine the machine bed, in particular with long profile rail guides.

**Attachment structure for carriages**

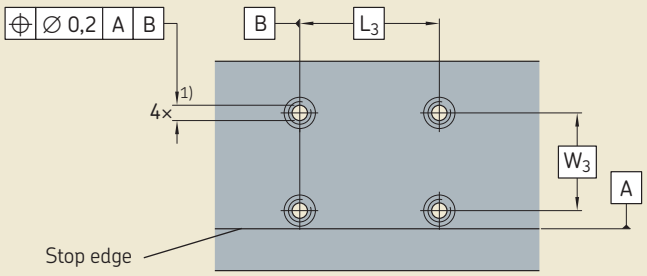


**Attachment structure for rails**

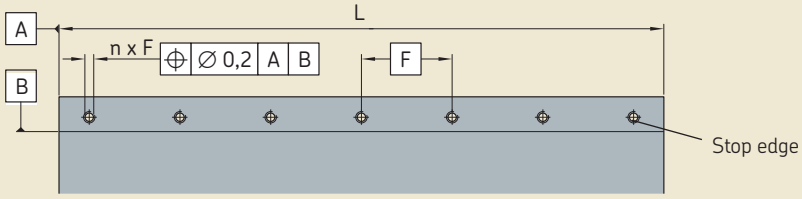


[1] in case of carriage types SA, SU: 2x

## Permissible height deviation

The values for height deviation are applicable for all carriage types.

If the values for height deviation $S_1$ (→ **table 4**) and $S_2$ (→ **table 5**) are within the specified range, the service life of the rail guide system will not be influenced.

**Permissible height deviation in lateral direction (→ table 4)**

**$S_1 = a\ Y$**

where
$S_1$ = Permissible height deviation [mm]
a = Distance between the rails [mm]
Y = Calculation factor lateral direction

**Note:** The height tolerance H for the carriages has to be taken into account. Please refer to **table 1** on **page 28**. If the difference $S_1$–2 x tolerance H < 0, a new product selection is necessary (other preload, precision).

**Permissible height deviation in longitudinal direction (→ table 5)**

**$S_2 = b\ X$**

where
$S_2$ = Permissible height deviation [mm]
b = Distance between the carriages [mm]
X = Calculation factor longitudinal direction

**Note:** The maximum difference ΔH for the carriages has to be taken into account. Please refer to **table 1** on **page 28**. If the difference $S_2 - \Delta H < 0$, a new product selection is necessary (other preload, precision).

**Table 4**

**Permissible height deviation in lateral direction**

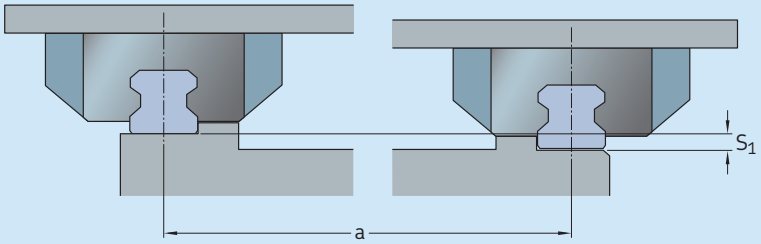


**Calculation factor Y for carriages**

| Calculation factor | Preload T0 | T1 Preload (2% C) | T2 Preload (8% C) |
|---|---|---|---|
| **Y** | $5{,}2 \times 10^{-4}$ | $3{,}4 \times 10^{-4}$ | $2{,}0 \times 10^{-4}$ |
| **Y (carriage type SA + SU)** | $6{,}2 \times 10^{-4}$ | $4{,}1 \times 10^{-4}$ | – |

**Table 5**

**Permissible height deviation in longitudinal direction on one rail**

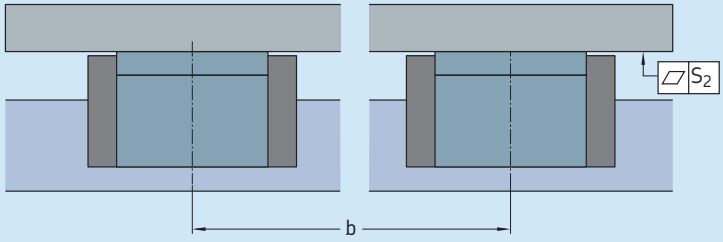


**Calculation factor X for carriages**

| Calculation factor | Carriage length short | normal | long |
|---|---|---|---|
| **X** | $6{,}6 \times 10^{-5}$ | $4{,}7 \times 10^{-5}$ | $3{,}3 \times 10^{-5}$ |

## Parallelism

The parallelism of mounted rails is measured on the rails and the carriages.

The values for the deviation in parallelism $P_a$ are applicable to all carriage types.

Deviation in parallelism $P_a$ increases the internal load. If the values are within the specified range in **table 6**, the service life of the profile rail guide system will not be influenced.

With standard mounting, the adjacent structure is slightly resilient. However, a rigid, high-precision adjacent structure is required for precision mounting. In this case, the values in the table must be halved.

## Maintenance

To avoid dirt from adhering to and embedding into the rails, the rails should be cleaned regularly with a "cleaning stroke". SKF recommends a cleaning stroke over the entire length of the rails twice a day or at least every eight hours.

Perform a cleaning stroke each time when switching the machine on or off.

**Table 6**

**Deviation in parallelism $P_a$**

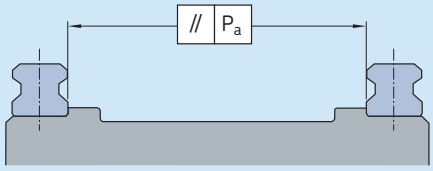


| Size | Tolerance class T0 | T1 (2% C) | T2 (8% C) |
|---|---|---|---|
| – | – | – | – |
| **15** | 0,030 | 0,018 | 0,010 |
| **20** | 0,036 | 0,022 | 0,012 |
| **25** | 0,038 | 0,024 | 0,014 |
| **30** | 0,042 | 0,028 | 0,018 |
| **35** | 0,046 | 0,030 | 0,020 |
| **45** | 0,056 | 0,038 | 0,024 |
| **Carriage type SA + SU** | | | |
| **15** | 0,036 | 0,022 | – |
| **20** | 0,044 | 0,026 | – |
| **25** | 0,046 | 0,028 | – |
| **30** | 0,050 | 0,034 | – |
| **35** | 0,056 | 0,036 | – |

C

# Typical application areas

**Typical application areas**

| Applications | Accuracy classes | | | Preload classes | | | Special requirements on | |
|---|---|---|---|---|---|---|---|---|
| | P5 | P3 | P1 | T0 | T1 | T2 | Speed | Sealing |
| **Handling** | | | | | | | | |
| Linear robotics | + | + | | + | + | | + | |
| Linear tables | + | + | + | + | + | + | + | |
| Modules and axis | + | + | | + | + | | | |
| Pneumatic automation | + | + | | + | + | | + | |
| **Plastic injection moulding** | | | | | | | | |
| Clamping / injecting | + | + | | + | + | | + | |
| Machine hood | + | | | + | | | | |
| **Woodworking** | | | | | | | | |
| Portal and gantry | + | + | + | + | + | + | + | + |
| Machine hood | + | | | + | | | | |
| **Printing** | | | | | | | | |
| Cutting and transport systems | + | | | + | + | | | + |
| **Packaging** | | | | | | | | |
| Labelling | + | + | | + | | | | |
| Stacking/palletizing | + | + | | + | + | | + | |
| **Medical** | | | | | | | | |
| X-ray | + | + | | + | + | | | |
| Patient tables | + | + | | + | + | | | + |
| Laboratory automation | + | + | | + | + | | | + |
| **Machine tool** | | | | | | | | |
| Cutting | + | + | + | + | + | + | + | + |
| Sawing | + | + | | + | + | + | + | |

Symbols: + Suitable

Specification sheet

***Please complete form and send to your SKF representative or authorized distributor.***

## Selection of profile rail guide slides

| Date |
|---|
| |

## 1a Customer

| | |
|---|---|
| Company | |
| Address 1 | |
| Address 2 | |
| City | Post code |
| Country | |
| Phone | Fax |

## 2 SKF contact

| | |
|---|---|
| Company | |
| Address 1 | |
| Address 2 | |
| City | Post code |
| Country | |
| Phone | Fax |

D

## 1b Contact

| | | | |
|---|---|---|---|
| Name | | telephone | mobile |
| Job title | Department | e-mail | |
| Name | | telephone | mobile |
| Job title | Department | e-mail | |
| Name | | telephone | mobile |
| Job title | Department | e-mail | |

## 3 Reason for request

| | | | |
|---|---|---|---|
| ☐ Replacement | Currently used product | ☐ New design | ☐ Other: |

## 4 Application / Industry

| |
|---|
| |

## 5 Application description

| |
|---|
| |

## 6 Number of carriages per rail

☐ 1 ☐ 2 ☐ 3 ☐ Other: | Please specify other

## 7 Number of rails used in parallel

☐ 1 ☐ 2 ☐ Other: | Please specify other

## 8 Stroke

mm

## 9 Rail length

mm

## 10 Distance between carriages

mm

## 11 Distance between rails

mm

## 12 Loads per axis

Additional moving load: kg

Additional force: N

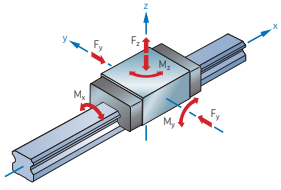


| | |
|---|---|
| Force | N |
| Moment | Nm |
| Eccentricity | mm |

| X | Y | Z |
|---|---|---|
| | | |
| | | |
| | | |

## 13 Speed

Maximum: m/s

## 14 Acceleration

Maximum: $m/s^2$

## 15 Mode of operation

Duty cycle: %

Length of one operation cycle: s

## 16 Specification life

Operating hours per day: h

requisite life: h

## 17 Dynamic diagram

S [mm]

t [s]

## 18 Accuracy class

(Details can be found in the LLT product catalog on **page 25**)

☐ P5 (standard) ☐ P3 (medium) ☐ P1 (high)

## 19 Preload class

(Details can be found in the LLT product catalog on **page 15**)

☐ T0 (Zero preload) ☐ T1 (Light preload 2% C) ☐ T2 (Medium preload 8% C)

## 20 Mounting

| | | | |
|---|---|---|---|
| Carriages | 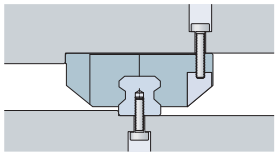 ☐ Flange type, mounted from above | 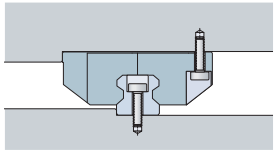 ☐ Flange type, mounted from below | 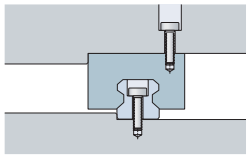 ☐ Slim type, mounted from above |
| Rails |  ☐ Mounted from above with plastic caps |  ☐ Mounted from above with metal plugs | |
| |  ☐ Mounted from below | ☐ Other | |

Customer interface

## 21 Environmental conditions

## 22 Remarks / Special request / Sketch

® SKF is a registered trademark of the SKF Group.

© SKF Group 2013
The contents of this publication are the copyright of the publisher and may not be reproduced (even extracts) unless prior written permission is granted. Every care has been taken to ensure the accuracy of the information contained in this publication but no liability can be accepted for any loss or damage whether direct, indirect or consequential arising out of the use of the information contained herein.

**PUB MT/P1 12942 EN** · August 2013

This publication supersedes publication 07061.

**skf.com**