Slewing bearings



7 General

8 Units conversion
9 Foreword
10 Slewing bearings
12 Common SKF slewing bearings
14 Other SKF slewing bearings

17 Principles of slewing bearing selection and application

18 Selection of slewing bearing type
20 Selection of slewing bearing size
23 Application of slewing bearings
28 Slewing bearing gear
30 Lubrication
34 Application data sheet for slewing bearing arrangements

39 Mounting, inspection and storage

40 General information
42 Mounting recommendations
47 Inspection
49 Storage

51 Single row four-point contact ball slewing bearings

52 Product data – general
62 Product tables
62 Light series four-point contact ball slewing bearings
68 Medium size four-point contact ball slewing bearings
82 Customized four-point contact ball slewing bearings

85 Single row crossed cylindrical roller slewing bearings

86 Product data – general
90 Product tables
92 Medium size crossed cylindrical roller slewing bearings
104 Customized crossed cylindrical roller slewing bearings

117 Product index

SKF – the knowledge engineering company





From one simple but inspired solution to a misalignment problem in a textile mill in Sweden, and fifteen employees in 1907, SKF has grown to become a global industrial knowledge leader.
Over the years, we have built on our expertise in bearings, extending it to seals, mechatronics, services and lubrication systems. Our knowledge network includes 46 000 employees, 15 000 distributor partners, offices in more than 130 countries, and a growing number of SKF Solution Factory sites around the world.

Research and development

We have hands-on experience in over forty industries based on our employees' knowledge of real life conditions. In addition, our world-leading experts and university partners pioneer advanced theoretical research and development in areas including tribology, condition monitoring, asset management and bearing life theory. Our ongoing commitment to research and development helps us keep our customers at the forefront of their industries.

Meeting the toughest challenges

Our network of knowledge and experience, along with our understanding of how our core technologies can be combined, helps us create innovative solutions that meet the toughest of challenges. We work closely with our customers throughout the asset life cycle, helping them to profitably and responsibly grow their businesses.

Working for a sustainable future

Since 2005, SKF has worked to reduce the negative environmental impact from our operations and those of our suppliers. Our continuing technology development resulted in the introduction of the SKF BeyondZero portfolio of products and services which improve efficiency and reduce energy losses, as well as enable new technologies harnessing wind, solar and ocean power. This combined approach helps reduce the environmental impact both in our operations and our customers' operations.

SKF Solution Factory makes SKF knowledge and manufacturing expertise available locally to provide unique solutions and services to our customers.



Working with SKF IT and logistics systems and application experts, SKF Authorized Distributors deliver a valuable mix of product and application knowledge to customers worldwide.



Our knowledge – your success

SKF Life Cycle Management is how we combine our technology platforms and advanced services, and apply them at each stage of the asset life cycle, to help our customers to be more successful, sustainable and profitable.

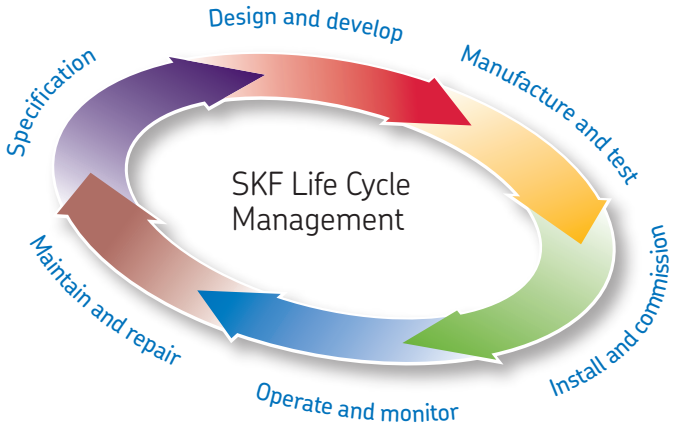

Working closely with you

Our objective is to help our customers improve productivity, minimize maintenance, achieve higher energy and resource efficiency, and optimize designs for long service life and reliability.

Innovative solutions

Whether the application is linear or rotary or a combination, SKF engineers can work with you at each stage of the asset life cycle to improve machine performance by looking at the entire application. This approach doesn't just focus on individual components like bearings or seals. It looks at the whole application to see how each component interacts with each other.

Design optimization and verification

SKF can work with you to optimize current or new designs with proprietary 3-D modelling software that can also be used as a virtual test rig to confirm the integrity of the design.



Bearings
SKF is the world leader in the design, development and manufacture of high performance rolling bearings, plain bearings, bearing units and housings.



Machinery maintenance
Condition monitoring technologies and maintenance services from SKF can help minimize unplanned downtime, improve operational efficiency and reduce maintenance costs.



Sealing solutions
SKF offers standard seals and custom engineered sealing solutions to increase uptime, improve machine reliability, reduce friction and power losses, and extend lubricant life.



Mechatronics
SKF fly-by-wire systems for aircraft and drive-by-wire systems for off-road, agricultural and forklift applications replace heavy, grease or oil consuming mechanical and hydraulic systems.



Lubrication solutions
From specialized lubricants to state-of-the-art lubrication systems and lubrication management services, lubrication solutions from SKF can help to reduce lubrication related downtime and lubricant consumption.



Actuation and motion control
With a wide assortment of products – from actuators and ball screws to profile rail guides – SKF can work with you to solve your most pressing linear system challenges.


Gamesa Eólica

General

8 Units conversion

9 Foreword

10 Slewing bearings

12 Common SKF slewing bearings

12 Single row four-point contact ball slewing bearings

12 Single row crossed cylindrical roller slewing bearings

14 Other SKF slewing bearings

14 Double row ball slewing bearings

14 Double row cylindrical roller slewing bearings

15 Triple row roller slewing bearings

15 Combined cylindrical roller/ball slewing bearings

15 Wire race slewing bearings

Units conversion

Quantity	Imperial unit	Metric SI units to imperial units		Imperial units to metric SI units	
Length	inch	1 mm	0,039 inch	1 in	25,40 mm
	foot	1 m	3,281 ft	1 ft	0,3048 m
	yard	1 m	1,094 yd	1 yd	0,9144 m
	mile	1 km	0,6214 mile	1 mile	1,609 km
Area	square inch	1 mm^2	0,00155 sq.in	1 sq.in	645,16 mm^2
	square foot	1 m^2	10,76 sq.ft	1 sq.ft	0,0929 m^2
Volume	cubic inch	1 cm^3	0,061 cub.in	1 cub.in	16,387 cm^3
	cubic foot	1 m^3	35 cub.ft	1 cub.ft	0,02832 m^3
	imperial gallon	1 l	0,22 gallon	1 gallon	4,5461 l
	U.S. gallon	1 l	0,2642 U.S. gallon	1 U.S. gallon	3,7854 l
Velocity, speed	foot per second	1 m/s	3,28 ft/s	1 ft/s	0,30480 m/s
	mile per hour	1 km/h	0,6214 mile/h (mph)	1 mile/h (mph)	1,609 km/h
Mass	ounce	1 g	0,03527 oz	1 oz	28,350 g
	pound	1 kg	2,205 lb	1 lb	0,45359 kg
	short ton	1 tonne	1,1023 short ton	1 short ton	0,9072 tonne
	long ton	1 tonne	0,9842 long ton	1 long ton	1,0161 tonne
Density	pound per cubic inch	1 g/cm^3	0,0361 lb/cub.in	1 lb/cub.in	27,680 g/cm^3
Force	pound-force	1 N	0,225 lbf	1 lbf	4,4482 N
Pressure, stress	pounds per square inch	1 MPa	145 psi	1 psi	6,8948 × 10^3 Pa
Moment	inch pound-force	1 Nm	8,85 in.lbf	1 in.lbf	0,113 Nm
Power	foot-pound per second	1 W	0,7376 ft lbf/s	1 ft lbf/s	1,3558 W
	horsepower	1 kW	1,36 HP	1 HP	0,736 kW
Temperature	degree	Celsius	$t_C = 0,555\ (t_F - 32)$	Fahrenheit	$t_F = 1,8\ t_C + 32$

Foreword

This catalogue shows the range of SKF single row four-point contact ball and single row crossed cylindrical roller slewing bearings, which are in regular demand and are used in a variety of applications. This range of SKF slewing bearings, which is based on SKF experience, offers a number of benefits:

- simplified bearing selection and application design work
- long-term stable supply
- worldwide availability
- no minimum order quantities
- simplified ordering and stocking

This catalogue contains basic data relevant to slewing bearings. More detailed information for a particular slewing bearing can be supplied on request.

The data in this catalogue relate to SKF's state-of-the art technology and production capabilities. The data may differ from that shown in earlier publications because of redesign, technological developments, or revised methods of calculation.

SKF reserves the right to make continuing improvements to SKF products with respect to materials, design and manufacturing methods, as well as changes necessitated by technological developments

The general information relating to a specific bearing is provided immediately preceding the table listing that bearing. General information and information common to all slewing bearings can be found in the chapters "Principles of bearing selection and application" and "Mounting, inspection and storage". Please note that all information related to bearing performance, e.g. load ratings, are only valid, when the bearings have been installed and maintained according to the instructions contained in this catalogue.

The catalogue is designed so that product information is easy to find and use. In order to enable the user to quickly find the technical data for a slewing bearing known only by its designation, the products are listed by designation in alphanumeric order in the "Product index", starting on **page 114**. Each entry lists the page number where the bearing can be found and provides a brief description of the product.

Please note that the items included in this catalogue do not represent the complete SKF slewing bearing range and that new items may be added in the future.

NOTE: All information related to bearing performance, e.g. load ratings, are only valid when the bearings have been installed and maintained properly, at least according to the instructions contained in this catalogue.

Slewing bearings

Generally, slewing bearings are large-size rolling bearings that can accommodate axial, radial and moment loads acting either singly or in combination and in any direction. They can perform both slewing (oscillating) movements as well as rotational movements.

Basically, a slewing bearing (→ **fig. 1**) consists of an inner ring (**a**), an outer ring (**b**) and rolling elements – balls (**c**) or cylindrical rollers – that are separated by polyamide spacers (**d**). The rings, one of which usually incorporates a gear (**e**), are provided with holes (**f**) to accommodate attachment bolts. The holes may be threaded. Generally, only the raceways in the rings (**h**) are hardened and precision-ground. Integral seals (**g**) made of acrylonitrile-butadiene rubber (NBR) keep the lubricant in, and contaminants out of the bearing. Slewing bearings are relubricated through grease fittings (**i**) to reduce maintenance and operating costs.

Compared to traditional pivot arrangements, slewing bearing arrangements provide many design and performance advantages. The compactness and large inner diameter simplify the design of the bearing arrangement and its associated components. The low sectional height of these bearings means that the pinion lever can be kept short. In most cases only flat surfaces on the associated components are needed.

Slewing bearings were originally designed to be mounted only on horizontal support structures, but can now be used successfully in vertical bearing arrangements. The forces and load distribution in slewing bearings, when subjected to axial, radial and moment loads, are shown in **figs. 2** to **5**.

Slewing bearings perform extremely well in a variety of applications such as:

- access platforms
- bucket wheel excavators
- conveyor booms
- cranes of all types
- small, medium and large excavators
- indexing tables
- ladle turrets
- offshore applications
- robots
- railway bogies
- rotary platforms
- stackers
- solar mirrors
- tunnel boring machines
- wind turbines

Fig. 1

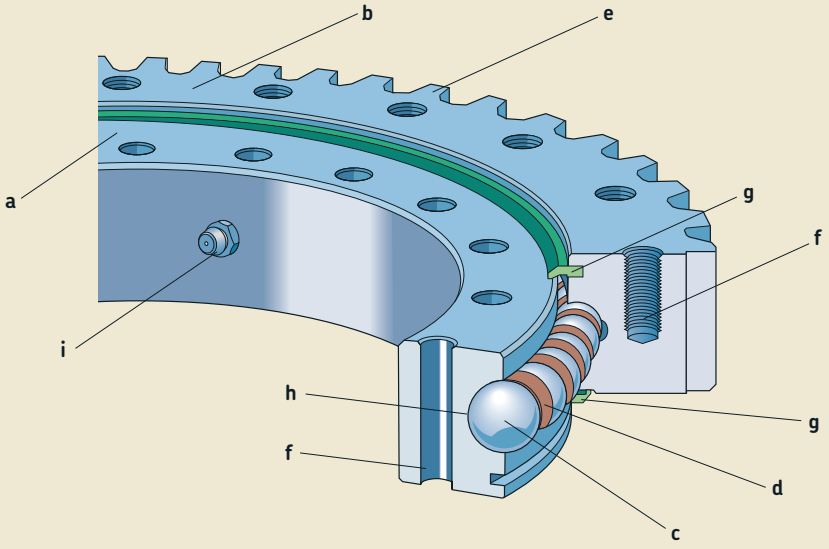

Fig. 2

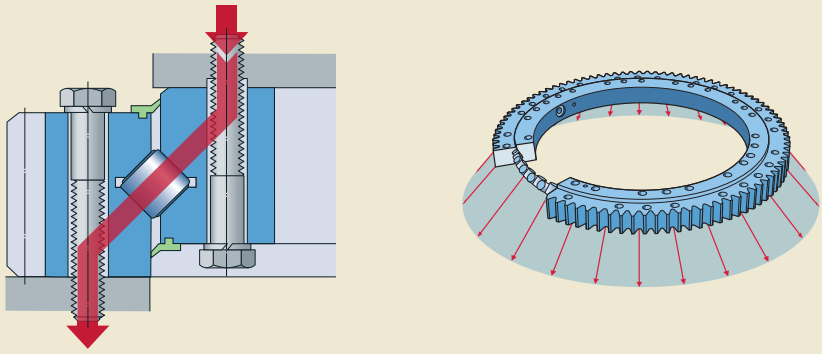

Transmission of axial loads in a supported slewing bearing

Fig. 3

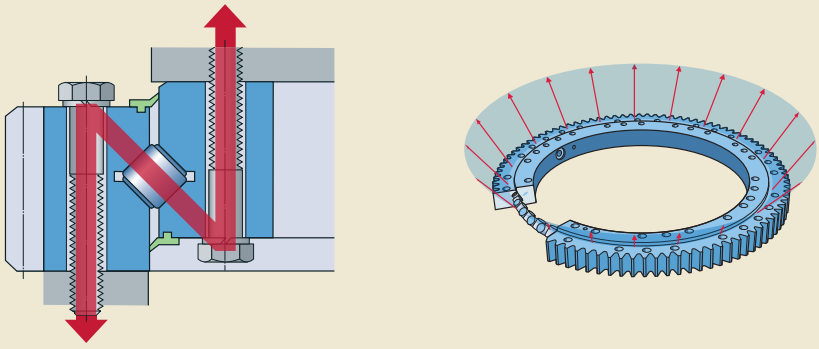

Transmission of axial loads in a suspended slewing bearing

Fig. 4

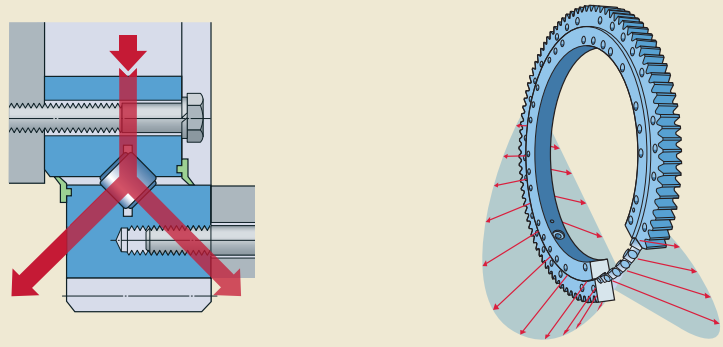

Transmission of radial loads in a vertical arranged slewing bearing

Fig. 5

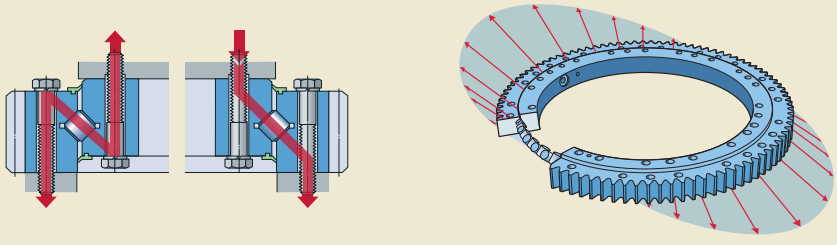

Transmission of moments in a supported slewing bearing

Common SKF slewing bearings

SKF manufactures slewing bearings in a number of types and variants. The most common bearings available from stock or within short lead times are:

- single row four-point contact ball slewing bearings
- single row crossed cylindrical roller slewing bearings

These standard slewing bearings are introduced in the following pages and listed with their performance data in the relevant product tables. Commonly ordered customized bearings are listed in separate product tables, starting on **page 78** and **page 102**.

SKF also manufactures a wide range of other types of slewing bearings. A brief description of these bearings can be found under the heading "Other SKF slewing bearings", starting on **page 12**. For additional information about these bearings, contact the SKF application engineering service.

Single row four-point contact ball slewing bearings

Light series four-point contact ball slewing bearings (→ **fig. 1**)

- with an external gear (**a**)
- with an internal gear (**b**)
- without a gear (**c**)

Medium size four-point contact ball slewing bearings (→ **fig. 2**)

- with an external gear (**a**)
- with an internal gear (**b**)
- without a gear gear (**c**)

Single row crossed cylindrical roller slewing bearings

Medium size crossed cylindrical roller slewing bearings (→ **fig. 3**)

- with an external gear (**a**)
- with an internal gear (**b**)
- without a gear (**c**)

Light series four-point contact ball slewing bearings

Fig. 1

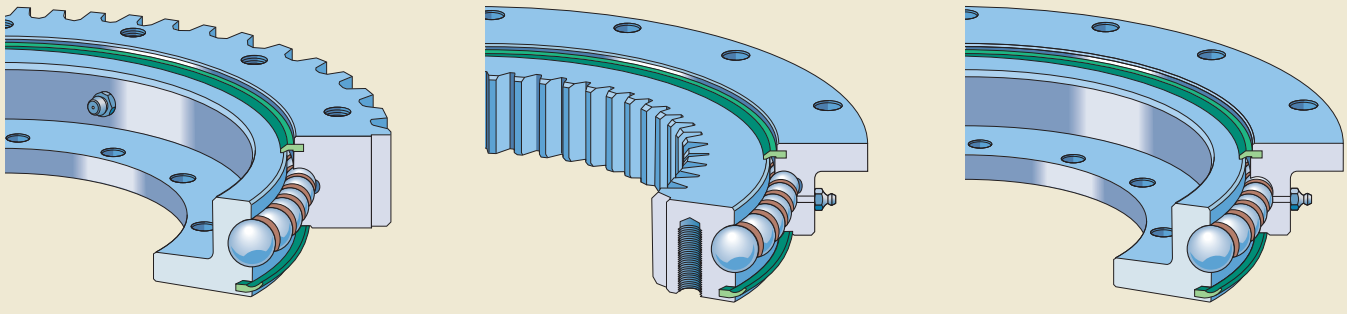

a **b** **c**

Medium size four-point contact ball slewing bearings

Fig. 2

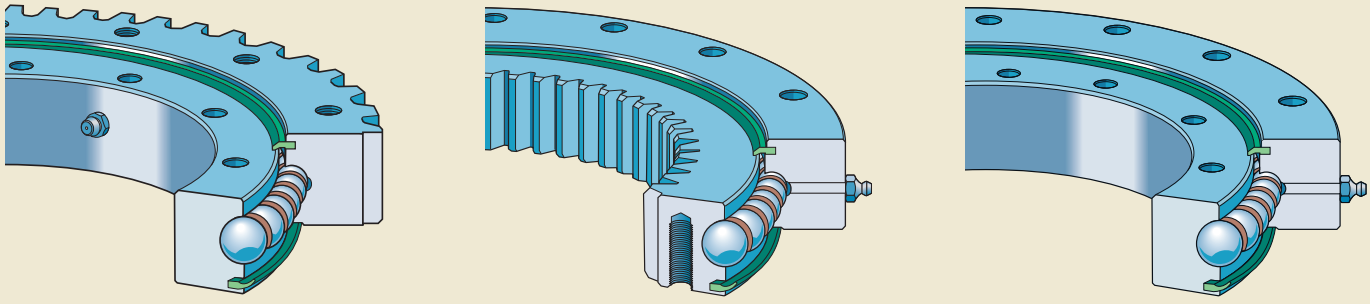

a b c

Medium size crossed cylindrical roller slewing bearings

Fig. 3

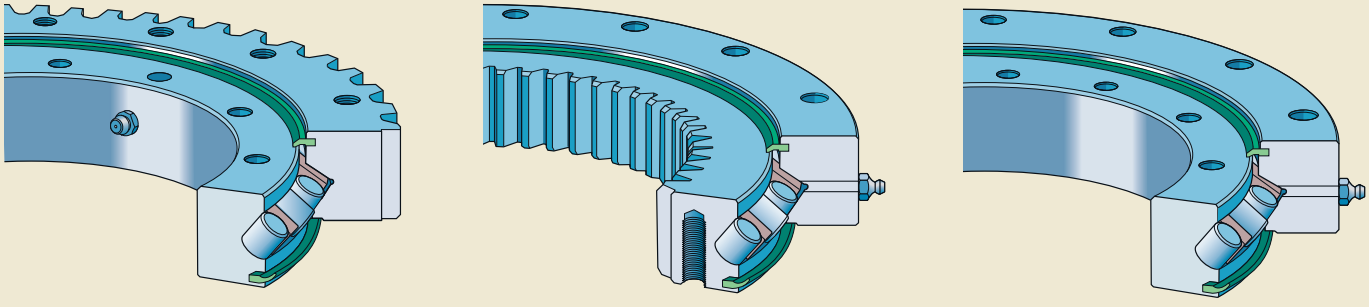

a b c

Other SKF slewing bearings

The SKF slewing bearings listed in this catalogue represent only a part of the comprehensive SKF assortment. These bearings, which have an outside diameter ranging from 50 to 7 900 mm, are available with one-piece rings. Larger bearings with an outside diameter up to 14 000 mm have segmented rings. For the purpose of this catalogue, only examples of these large bearings are shown to illustrate SKF's manufacturing capabilities.

Double row ball slewing bearings

Double row four-point contact ball slewing bearings offer advantages for applications where the associated components may not be able to provide the level of stiffness or accuracy required by other types of slewing bearings.

These bearings consist of two one-piece rings and two independent rows of balls. The ball set can be a full complement design or separated by a window-type steel cage or polyamide spacers. The bearings are normally preloaded and fitted with integral lip seals.

Double row four-point contact ball slewing bearings can be manufactured:

- without a gear
- with an internal gear (→ **fig. 1**)
- with an external gear

Double row cylindrical roller slewing bearings

Double row cylindrical roller slewing bearings can accommodate heavy axial and radial loads as well as high tilting moments, which makes them particularly suitable for heavy-duty applications.

The bearings consist of two one-piece rings and two independent rows of rollers. The rollers are inserted into the bearing via two holes in one of the two rings and are separated by polyamide spacers. After loading the roller set, the holes are closed with a plug that conforms to the raceway contour. These bearings are normally preloaded and fitted with integral lip seals.

Double row cylindrical roller slewing bearings can be manufactured:

- without a gear
- with an internal gear (→ **fig. 2**)
- with an external gear

Double row ball slewing bearing with an internal gear

Fig. 1

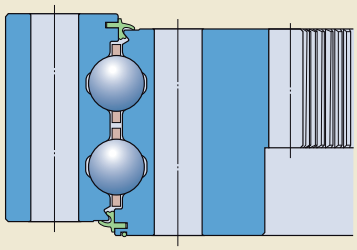

Double row cylindrical roller slewing bearing with an internal gear

Fig. 2

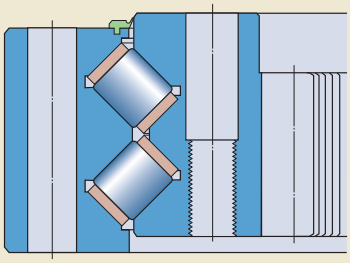

Triple row roller slewing bearing with an internal gear

Fig. 3

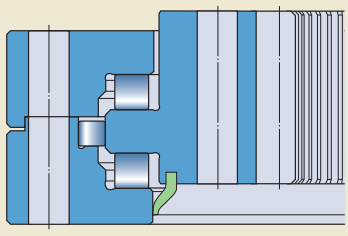

Triple row roller slewing bearings

Triple row roller slewing bearings are an excellent choice for heavily loaded applications. They provide the highest load ratings possible and can accommodate very heavy loads and high tilting moments.

These bearings are combined cylindrical roller radial/thrust bearings. They consist of one one-piece and one two-piece ring as well as two roller sets to accommodate axial loads, and one roller set to accommodate radial loads. Polyamide cages separate the axially loaded rollers. The bearings are not preloaded and have integral lip seals.

Triple row roller slewing bearings can be manufactured:

- without a gear
- with an internal gear (→ **fig. 3**)
- with an external gear

Triple row roller slewing bearings are sensitive to the deflections of associated components. As a result, an extremely stiff and accurately manufactured support structure is required if the bearing is to achieve maximum service life.

Combined cylindrical roller/ball slewing bearings

Combined cylindrical roller/ball slewing bearings can accommodate the same heavy axial loads as triple row roller slewing bearings in one direction only, but cannot accommodate the same degree of tilting moments. They are suitable for heavy-duty applications, but are as sensitive as triple row bearings to surface imperfections.

Combined cylindrical roller/ball slewing bearings consist of two one-piece rings and normally have axial internal clearance. The balls are inserted into the bearing via a hole in one of the two rings and are separated by polyamide spacers.

Combined cylindrical roller/ball slewing bearings can be manufactured:

- without a gear
- with an integral gear
- with an external gear (→ **fig. 4**)

Wire race slewing bearings

SKF offers a wide range of single row as well as multi-row ball or cylindrical roller wire race slewing bearings. Single row four point contact ball wire race slewing bearings (→ **fig. 5**) and single row crossed cylindrical roller wire race slewing bearings (→ **fig. 6**) are the most widely used slewing bearing types and normally consist of:

- a one-piece and a two-piece bearing ring made of aluminium
- four through-hardened wire inserts made of bearing steel, forming the raceways
- a cage guided rolling element assembly

Single row wire race slewing bearings are recommended for lightweight, precision applications. They are 70% lighter than similarly sized all-steel bearings, and can accommodate light to normal loads and significant tilting moments. Furthermore, the design of the wire inserts makes these bearings relatively insensitive to support surface imperfections.

Multi-row wire race slewing bearings, such as double or triple row roller bearings, are available for heavier load applications.

Wire race slewing bearings can be manufactured:

- without a gear
- with an internal gear
- with an external gear

Combined cylindrical roller/ball slewing bearing with an external gear

Fig. 4

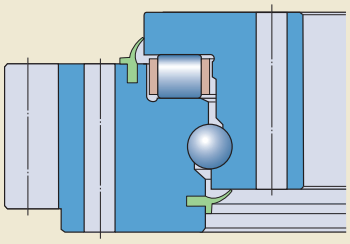

Single row ball wire race slewing bearing

Fig. 5

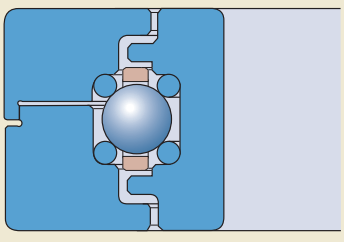

Single row cylindrical roller wire race slewing bearing with an internal gear

Fig. 6

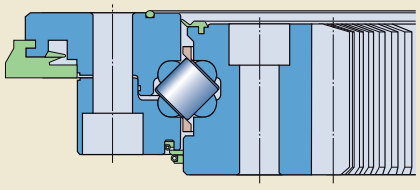

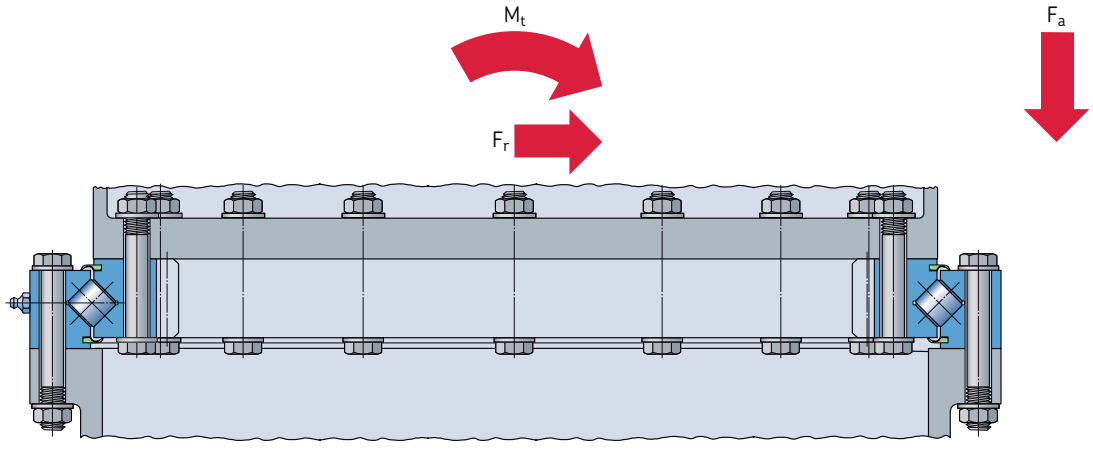
M_t
F_a
F_r

Principles of slewing bearing selection and application

18 Selection of slewing bearing type

19 Accuracy
19 Magnitude and direction of loads
19 Permissible operating temperature
19 Vibration
19 Operating speed
19 Sealing

20 Selection of slewing bearing size

20 Determining bearing loads

21 Determining bearing size
21 Raceway capacity
21 Bolting capacity

22 Selection example

23 Application of slewing bearings

23 Associated components
23 Support structure
24 Support surfaces
24 Overall flatness tolerance
25 Flatness in the circumferential direction
25 Flatness in the radial direction

26 Attachment bolts
26 Surface pressure in bolt joints
26 Calculation of bolted joints

27 Sealing arrangements

28 Slewing bearing gear

28 Gear backlash

29 Pinions

30 Lubrication

30 Bearing lubrication

30 Gear lubrication

31 Relubrication intervals and quantities
31 Bearings
31 Gears

32 Relubrication procedures
32 Manual relubrication
32 Automatic relubrication

34 Application data sheet for slewing bearing arrangements

Selection of slewing bearing type

Each slewing bearing type has different characteristics based on its design, which make it more, or less, appropriate for a given application. For example, single row four-point contact slewing bearings have a simple and sturdy design that makes them cost-effective, while crossed cylindrical roller slewing bearings are used when accuracy and rigidity are key operational parameters or when zero operational clearance or preload is required.

Because several factors have to be considered when selecting a slewing bearing type, no general rules can be provided.

The information provided here are the most important factors to be considered when selecting a standard bearing type. Factors include:

- accuracy
- magnitude and direction of loads
- permissible operating temperature
- vibration
- operating speed
- sealing

A brief overview of the standard slewing bearing types and their suitability for a particular application can be found in **table 1**.

Selecting the appropriate slewing bearing can be a challenge, particularly if there are stringent technical, reliability or economic demands. In these cases, for example, it is advisable to consult the SKF application engineering service during the initial design phase. This service can do much more than help select a bearing. They can also provide expert advice in any of the following areas:

- design optimization
- lubrication systems
- sealing arrangements

To provide the SKF application engineering service with the information they need to help find the best technical solution for your application, SKF has developed a questionnaire, which can be found on **page 32**.

Table 1

Slewing bearing selection guide

Slewing bearing type	Suitability of bearings for				
	high running accuracy	high speeds	heavy static loads	vibration	long service life
Single row four-point contact ball slewing bearings					
Light series bearings	–	**o**	**o**	–	**o**
Medium size bearings	–	+	+	**o**	**o**
Customized bearings	–	+	+	**o**	**o**
Single row crossed cylindrical roller slewing bearings					
Medium size bearings	+	–	**o**	+	+
Customized bearings	+	–	**o**	+	+

+ Recommended **o** Suitable – Not recommended

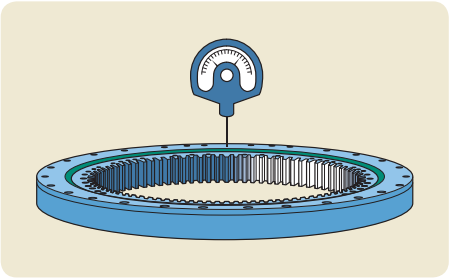

Accuracy

When preloaded, SKF crossed cylindrical roller slewing bearings provide a high degree of stiffness, due to the large roller/raceway contact area. These bearings, which have a high degree of running accuracy, are typically used when accurate positioning is a key operational parameter. Four-point contact ball slewing bearings have a lower degree of stiffness.

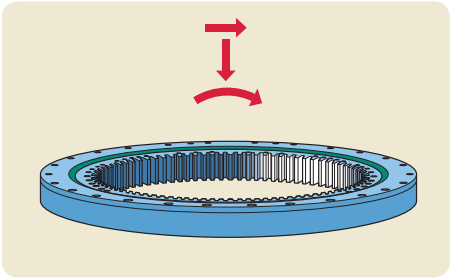

Magnitude and direction of loads

The magnitude of the load is one of the factors that usually determine the size of the bearing to be used. Generally, four-point contact ball slewing bearings are able to withstand heavy loads and shock loads. They can be adapted for slewing applications where heavy loads vary in magnitude and direction.

Using the static limiting load diagram, together with the bearings listed in the product tables, the required bearing size can be estimated using the resulting axial bearing load and the magnitude of the tilting moment.

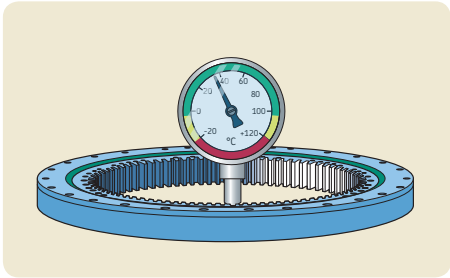

Permissible operating temperature

The permissible operating temperatures for slewing bearings listed in this catalogue are determined primarily by the spacer and seal material and the grease used for lubrication. The permissible operating temperature typically ranges from –25 to +70 °C. If slewing bearings are required to operate outside the reference temperatures, contact the SKF application engineering service. Also contact the SKF application engineering service if the outer ring has a lower temperature in operation than the inner ring, which might lead to reduced internal clearance or increase the preload in the bearing.

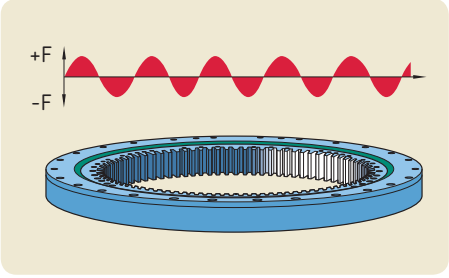

Vibration

For applications subjected to vibrations, preloaded four-point contact ball slewing bearings are typically used. However, crossed cylindrical roller slewing bearings are also suitable. In cases where sufficient experience with a similar bearing arrangement is not available, it is strongly advised to consult the SKF application engineering service.

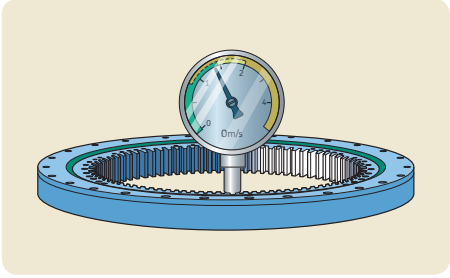

Operating speed

SKF four-point contact ball slewing bearings generate less friction than crossed cylindrical roller slewing bearings. Consequently, four-point contact ball slewing bearings also have a higher speed capability. These bearings can accommodate tangential operating speeds up to 4 m/s. Crossed cylindrical roller bearings are limited to approximately 1,5 m/s for continuous slewing motion and up to 2 m/s for brief periods.

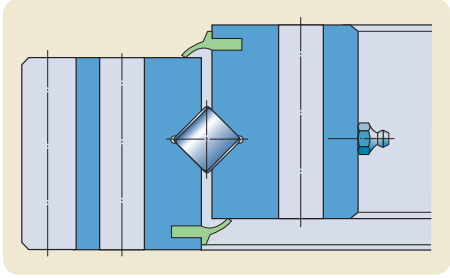

Sealing

The selection of a seal is vital to the performance of a slewing bearing. The standard seals used in SKF slewing bearings provide good protection against moisture and contaminants and also provide reliable retention of the lubricant.

These integral seals are not intended to protect bearings that operate under extreme conditions where, for example, they are exposed to water, vacuum, high levels of abrasive contaminants, or radiation. For these types of applications, additional external seals must be used to prevent media from entering the bearing cavity.

Selection of slewing bearing size

The size of a slewing bearing can be based initially on the dynamic and static load ratings of the bearing, in relation to the applied loads and the requirements regarding reliability and service life. Values for the axial dynamic load rating C and axial static load rating C_0 are quoted in the product tables.

When determining the most efficient and economical slewing bearing for a specific application, SKF recommends taking the following into consideration:

- loads acting on the bearing
- frequency of oscillating movements
- type of application
- bearing size most suitable for the application
- torque applied to the gear

If it is necessary to calculate the basic rating life*, contact the SKF application engineering service. SKF also recommends confirming the results by contacting the application engineering service once calculations and the selection process are complete.

*) The basic rating life is the result of a calculation that indicates the time a bearing can operate before the first sign of metal fatigue occurs on one of its rings or rolling elements.

Determining bearing loads

The loads and moments acting on a slewing bearing from the inherent weight of the components that it carries, and the other inertia forces, are either known or can be calculated. Assuming the conditions cited in **fig. 1**, the resulting loads and moments applied to the bearing can be estimated, using the following equations:

$$F_a = Q_a + G_1 + G_2 + G_3$$

$$M_t = Q_a \times L + F_r \times H_r + G_3 \times L_3 - G_1 \times L_1 - G_2 \times L_2$$

where

F_a = resulting axial load applied to the bearing, kN

F_r = external radial load applied to the bearing, e.g. work/wind force, kN

G_1 = weight fraction 1, e.g the counterweight, kN

G_2 = weight fraction 2, e.g. the weight of the cabin, kN

Load distribution scheme

Fig. 1

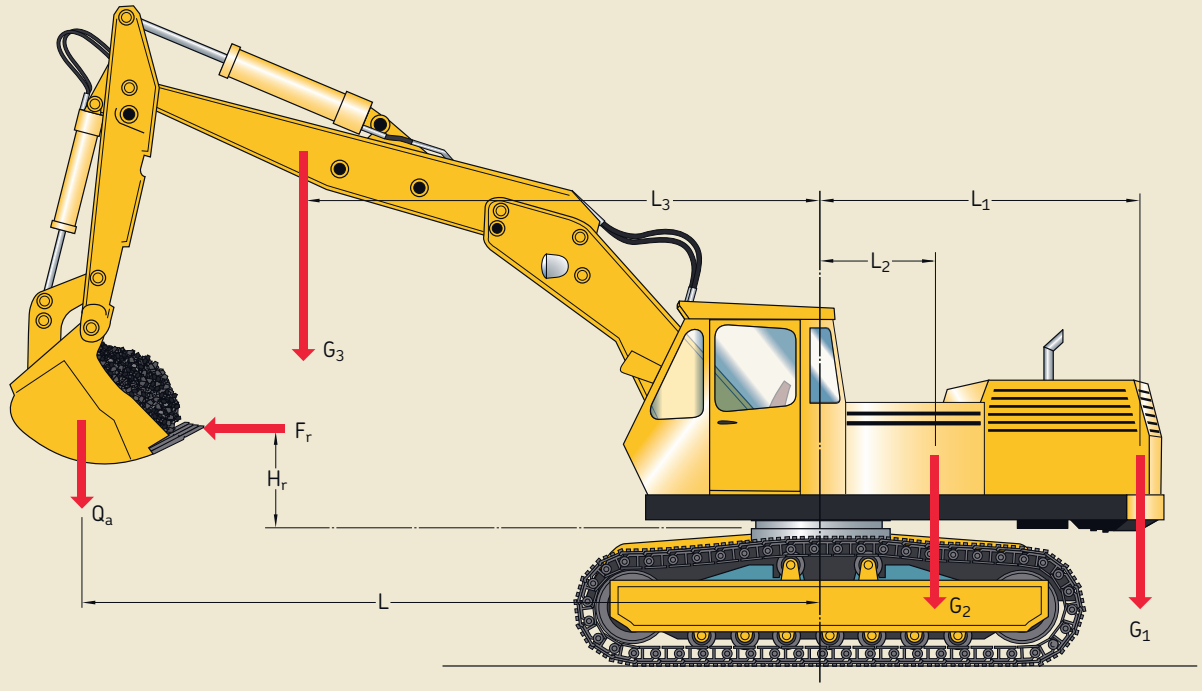

G_3 = weight fraction 3, e.g. the weight of the boom, kN
H_r = distance from the bearing centre point to the line of action of the radial force F_r, m
L = distance from the centre of rotation to the centre of the lifting load, m
L_1 = distance from the centre of rotation to the centre of gravity of the weight fraction 1, m
L_2 = distance from the centre of rotation to the centre of gravity of the weight fraction 2, m
L_3 = distance from the centre of rotation to the centre of gravity of the weight fraction 3, m
M_t = resulting tilting moment acting on the bearing, kNm
Q_a = lifting load, kN

In applications where the working radii L and L_3 for the lifting load and the adjustable boom vary, the maximum working radii have to be used to calculate the maximum tilting moment M_t acting on the bearing.

External radial loads F_r may be neglected as long as they are ≤ 5% of the axial load. If these radial loads are acting at any point other than the plane of the bearing, the resulting tilting moment should be calculated and taken into consideration. If the radial loads exceed the ratio F_r/F_a = 0,6, it is advisable to contact the SKF application engineering service.

Determining bearing size

When determining bearing size using the static limiting load diagrams, additional forces should be taken into account. Which forces to consider depend on the type and mode of operation of the machine and operational requirements regarding service life and reliability. This is done by multiplying the resulting axial load and tilting moment by a load factor f_L as listed in **table 1**:

$$F_{ar} = f_L \times F_a$$

$$M_{tr} = f_L \times M_t$$

where
F_{ar} = maximum rated axial load, kN
F_a = resulting axial load applied to the bearing, kN
M_{tr} = maximum rated tilting moment, kNm
M_t = resulting tilting moment acting on the bearing, kNm
f_L = load factor (→ **table 1**)

Using the calculated values for the maximum rated axial load F_{ar} and the maximum rated tilting moment M_{tr}, the requisite slewing bearing size can be obtained from the appropriate static limiting load diagram, shown together with the slewing bearings in the product tables. Each diagram contains two curves per bearing; the solid line shows the raceway capacity and the dotted line shows the bolting capacity (→ **fig. 2**). The points, where the plotlines of rated axial load F_{ar} and the rated tilting moment M_{tr} intersect, must always be below the capacity curves, i.e. inside the green zone. If the points of intersection (red) are above the capacity curves, the bearing is not suitable for the application.

Raceway capacity

The raceway capacity is defined as the maximum static load that can be accommodated by the slewing bearing without detrimental effects on its running behaviour.

Bolting capacity

Bolting capacity applies to the supported bearing and the number of 10.9 strength grade (EN ISO 898) nuts and bolts used to anchor the bearing to its support surface. For these capacities to be valid, the threads of all bolts and nuts must be coated with a thin layer of light oil and tightened according to the recommended values in **table 1** "Tightening torque and preload of attachment bolts" on **page 24**.

Note: All basic load ratings and capacity data specified in this catalogue are valid for supported slewing bearings. In the case of suspended bearing arrangements, contact the SKF application engineering service.

Raceway and bolting capacity

Fig. 2

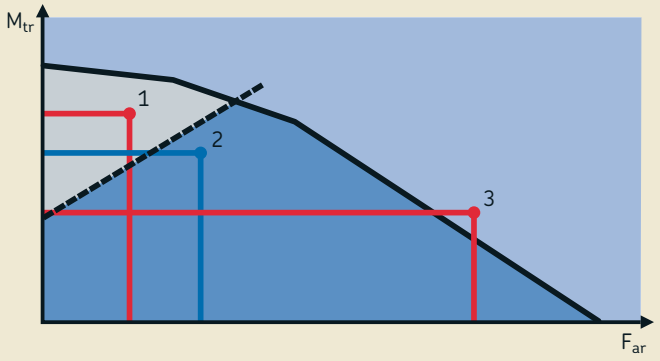

Table 1

Load factor f_L

Application	Load factor f_L
Aerial platforms	1,33
Carrousels	2
Cement mixers	1,33
Compactors	2
Concrete pumps	1,5
Handling workshops	1,15
Mobile cranes	1,5
Mini excavators	1,33
Sedimentation tanks	1,25
Service cranes	1,33
Turntables	1,15
Welding positioners	1,15

Selection example

A slewing bearing with an internal gear has to be selected for a mini excavator, which is exposed to the following operating conditions:

- resulting axial load applied to the bearing F_a = 65 kN
- external radial load applied to the bearing F_r = 12 kN
- resulting tilting moment acting on the bearing M_t = 120 kNm

The following is considered:

- the value for the load ratio F_r/F_a = 12/65 = 0,184 lies within the permissible range $F_r/F_a \leq 0,6$. Therefore, any series of four-point contact ball or crossed cylindrical roller slewing bearing can be used.
- with f_L = 1,33 the maximum rated axial load and maximum rated tilting moment is calculated:

$$F_{ar} = f_L \times F_a = 1,33 \times 65 = 87 \text{ kN}$$

$$M_{tr} = f_L \times M_t = 1,33 \times 120 = 160 \text{ kNm}$$

- using F_{ar} = 87 kN and M_{tr} = 160 kNm, a bearing that adequately meets the needs of the application can be obtained from the product tables:

– medium size four-point contact ball slewing bearing with an internal gear, **page 70**: RKS.062.20.1094
– medium size crossed cylindrical roller slewing bearing with an internal gear, **page 94**: RKS.162.14.1094

In applications where stiffness is important, the crossed cylindrical roller slewing bearing RKS.162.14.1094 is the best choice; otherwise the four-point contact ball slewing bearing RKS.062.20.1094 is suitable for this task.



Reprinted courtesy of Caterpillar Inc.

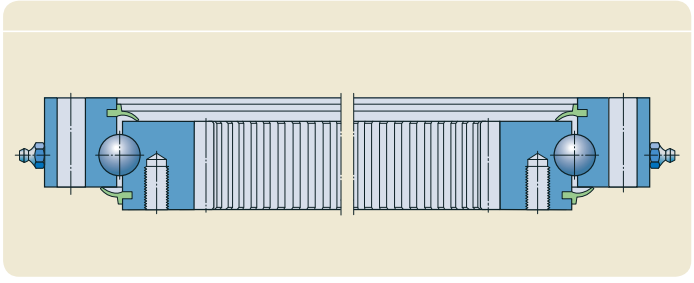

Four-point contact ball slewing bearing with an internal gear RKS.062.20.1094

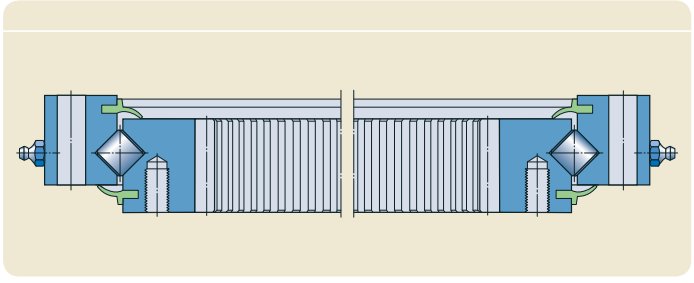

Crossed cylindrical roller slewing bearing with an internal gear RKS.162.14.1094

Application of slewing bearings

A slewing bearing arrangement consists of a single bearing that can accommodate axial and radial loads as well as tilting moments acting either singly or in combination and in any direction. To fully utilize these bearings, each of the following design considerations must be met:

- the bearing rings must be fully supported around their complete circumference and across the entire width of the axial side faces by strong and rigid associated components (→ **fig. 1**)
- strength grade 10.9 attachment bolts are used (EN ISO 898)
- the bearing is properly sealed

Associated components

To facilitate proper functioning of a slewing bearing arrangement, the support structure must be sufficiently strong and rigid. Furthermore the, flatness of the support surfaces must be within defined limits. For additional information about flatness tolerances, refer to **pages 22** and **23**.

Support structure

Support structures are typically welded frames or castings. Thick-walled cylindrical structures with an inside or outside flange provide better results than thin-walled fabricated structures with a trussed frame (→ **fig. 2**). Moreover, the arrangement of the walls of the sub- and superstructure should correspond with the rolling element assembly, to optimize power transmission.

Fig. 1

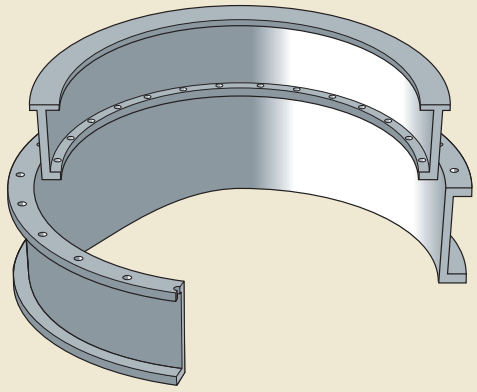

Strong and rigid associated components

Fig. 2

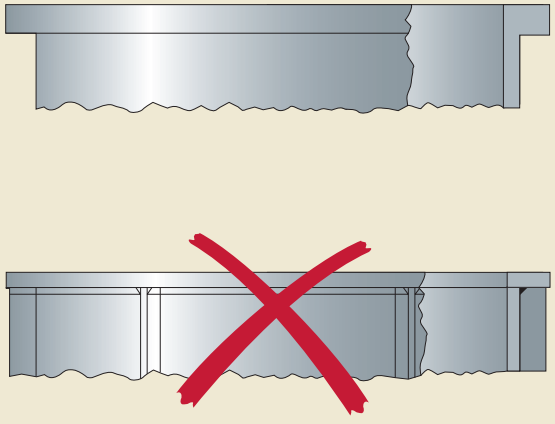

Support structure

The flange must support the bearing ring across its entire side face. The thickness of the support flange (→ **fig. 3**) should be in accordance with the following guideline values:

- $S \geq 0{,}05 \times d_m$, for bearings with a mean raceway diameter ≤ 500 mm
- $S \geq 0{,}04 \times d_m$, for bearings with a mean raceway diameter > 500 mm and ≤ 1 000 mm
- $S \geq 0{,}03 \times d_m$, for bearings with a mean raceway diameter > 1 000 mm

The requisite minimum wall thickness (→ **fig. 3**) of the structure can be estimated using

$S_1 = 0{,}35 \times S$

where
S = thickness of the support flange, mm
S_1 = wall thickness of the structure, mm
d_m = mean raceway diameter of the bearing, mm (→ **product tables**)

Support surfaces

Slewing bearings have limited rigidity, due to their relatively small cross sectional height compared to their diameter. The support structure should therefore be designed for maximum axial and radial rigidity. The support surfaces must be flat and free from rust, paint or burrs. Machining is mandatory and the surface roughness should be within the limits R_a = 3,2 to 6,3 µm. Additionally, the support surfaces should be thoroughly washed and dried before mounting to provide the proper frictional joint between the support surface and the bearing surface. Be sure that the support surfaces are not covered with a preservative or coated with oil or grease!

Before bolting each bearing ring to its support surface, it is essential to check the total axial run-out and flatness of the machined support surfaces, since a low section slewing bearing will be distorted by any irregularities. The flatness should be compared to that of an ideal plane surface. The deviations in height between measuring points of the actual surface drawn over the ideal plane are illustrated in **fig. 4**. The following parameters should be checked prior to mounting.

Fig. 3

Support flange and wall thickness

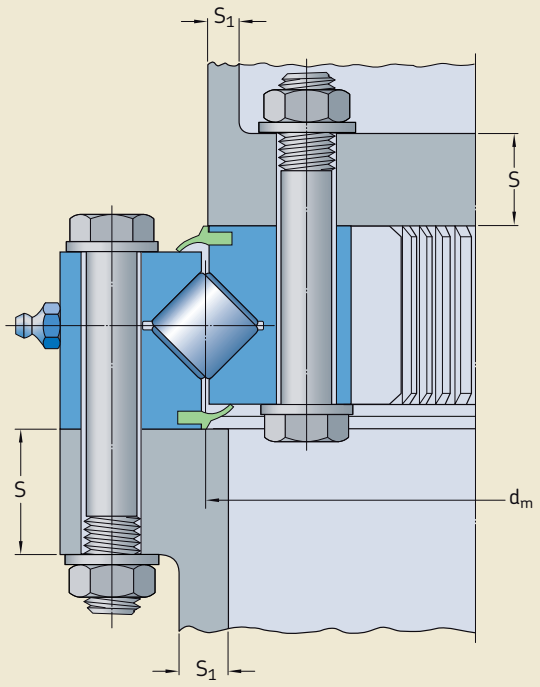

Fig. 4

Overall flatness tolerance

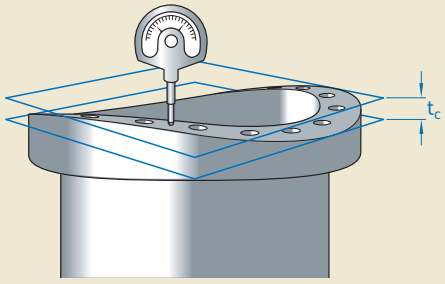

Overall flatness tolerance

The tolerance of the overall flatness in a circumferential direction of the support surfaces (→ **fig. 4**) is limited to

$t_c = (d_m + 1\,000)/10\,000$

where
t_c = maximum permissible deviation from flatness, mm
d_m = mean raceway diameter of the bearing, mm

Flatness in the circumferential direction

The flatness variation, the difference between the measurements of two consecutive points, as well as the variation in inclination (→ **fig. 5**), is of great importance. It is measured by dividing the circle into small segments of the length "n" smaller or equal to the distance of the attachment bolt hole.

Deviations in the same direction away from the nominal plane, such as measurements "t_{ca}" and "t_{cb}", or "t_{cc}" and "t_{cd}" between two consecutive points, should not exceed the guideline value

$$t_{ca} - t_{cb} \leq 0{,}0002 \times n$$

If however, the inclination changes direction, as at point P in **figure 5**, the sum of the deviations, such as measurements "t_{cb}" and "t_{cc}", should not exceed the guideline value

$$t_{cb} + t_{cc} \leq 0{,}0002 \times n$$

where

$t_{ca} - t_{cb}$ = permissible flatness variation between 2 consecutive measurements, where inclination is constant, mm

$t_{cb} + t_{cc}$ = permissible flatness variation between 2 consecutive measurements, where inclination changes direction, mm

n = distance between two consecutive measuring points, mm

Flatness in the radial direction

Flatness in the radial (transverse) direction, e.g. the conicity (→ **fig. 6**), measured across the width of the support surface is limited to

$$t_t = B / 1000$$

where

t_t = permissible deviation of axial run-out in the radial (transverse) direction, mm

B = width of the support surface, mm

In applications where it is not possible to obtain the permissible tolerances, contact the SKF application engineering service.

Fig. 5

Flatness in the circumferential direction

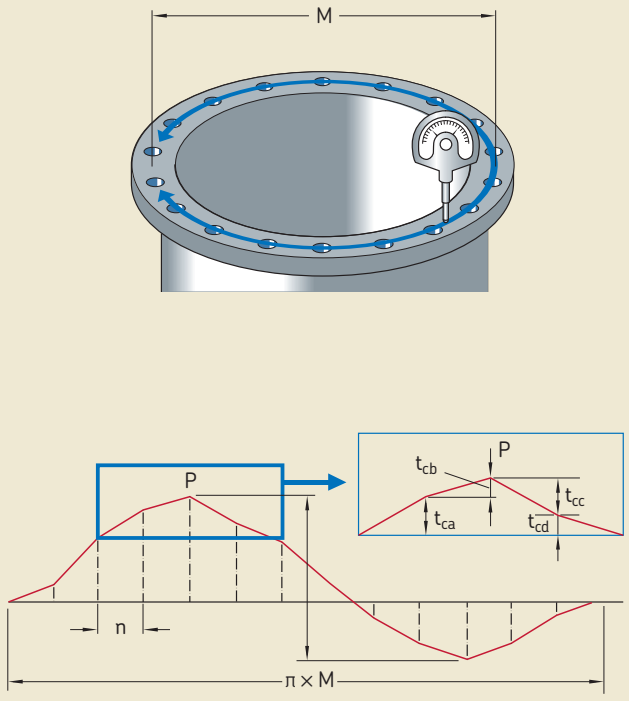

Fig. 6

Flatness in the radial direction

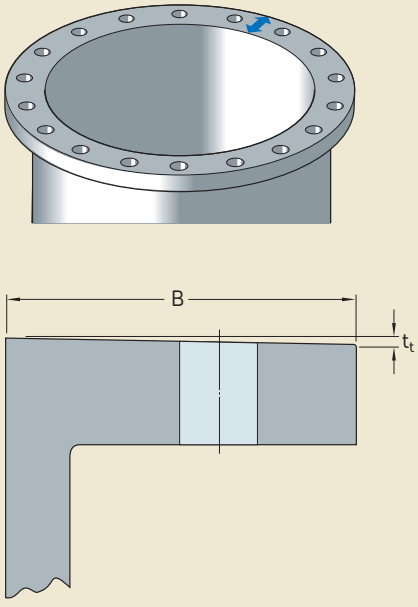

Attachment bolts

Hexagonal head bolts in accordance with DIN EN ISO 4014:1999 in the 10.9 strength grade (EN ISO 898) are suitable for securing slewing bearings to their support structures. The minimum clamp length of bolted joints (→ **fig. 7**) should be

$L_K = 5 \times G$

where
L_K = the minimum length of bolt joint, mm
G = the bolt thread diameter, mm

Surface pressure in bolt joints

For 10.9 strength grade bolts and nuts, SKF recommends using hardened or quenched and tempered flat washers beneath the bolt head and nut, to avoid excessive surface pressure on the support surfaces. Spring washers of any type should **never** be used.

The recommended tightening torque values for nuts and bolts are provided in **table 1**. Under normal operating conditions, the recommended bolt torque values will provide a reliable and safe connection to the support surface and the application. However, when the arrangement is subjected to very heavy loads, shock loads and/or vibrations, consult the SKF application engineering service.

Calculation of bolted joints

The SKF rules to calculate bolted joints are based on experience in practice and standardized calculation rules. When considering slewing bearing arrangements, a distinction has to be made between supported or suspended bearings (→ **figs. 2** and **3** on **page 9**). In the case of suspended bearing arrangements, consult the SKF application engineering service.

Fig. 7

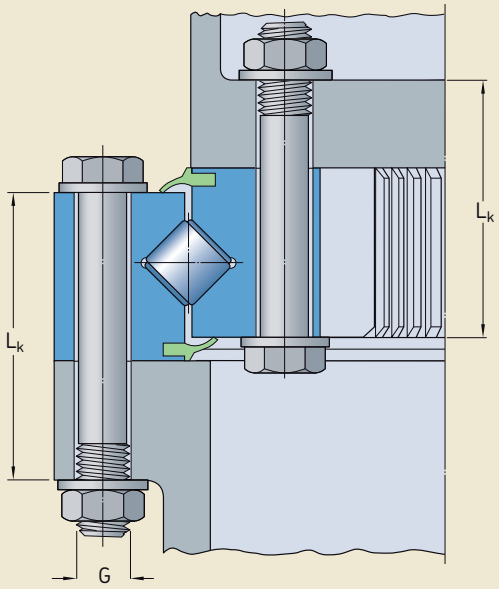

Table 1

Tightening torque and preload of attachment bolts

Attachment bolts/nuts Size[1]	**Tightening torque and assembly preload for bolts to strength grade 10.9 (EN ISO 898)** M_A[2]	F_M[3]	F_M[4]
–	Nm	kN	kN
M 6	14	13.2	–
M 8	34	24.2	–
M 10	67	38.5	–
M 12	115	56	–
M 14	185	77	–
M 16	285	106	–
M 18	395	129	–
M 20	560	166	–
M 22	770	208	–
M 24	970	239	283
M 27	1 420	315	372
M 30	1 930	385	454
M 33	2 630	480	564
M 36	3 380	560	664

[1] ISO general purpose metric threads (DIN 13-1)
[2] Tightening torque for coefficient of friction in the bolt head/nut contact surface and the thread μ_K-μ_G = 0,14. In case of different friction coefficients the tightening torque should be adjusted accordingly
[3] Bolt preload corresponding to coefficient of friction in the thread μ_G = 0,14
[4] Bolt preload to 90% of the yield point stress. For torsion free tightening, use an HYDROCAM bolt tensioner

Sealing arrangements

The efficiency of the sealing arrangement has a decisive influence on the service life of every bearing. SKF slewing bearings are normally equipped with contact seals made of acrylonitrile-butadiene rubber (NBR), which seal against the shoulder or the side face of the inner or outer ring (→ **fig. 8**).

Depending on the application and the environmental conditions, a secondary seal might be necessary to prevent solid contaminants and moisture from penetrating into the bearing. This secondary seal, for example, might be a large V-ring, which is commercially available (→ **fig. 9**). It could also be designed as a sheet steel cover, bolted to either the rotating or stationary part of the bearing arrangement (→ **fig. 10**).

Fig. 8

Integrated seals

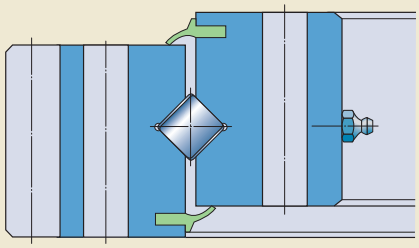

Fig. 9

Secondary seals

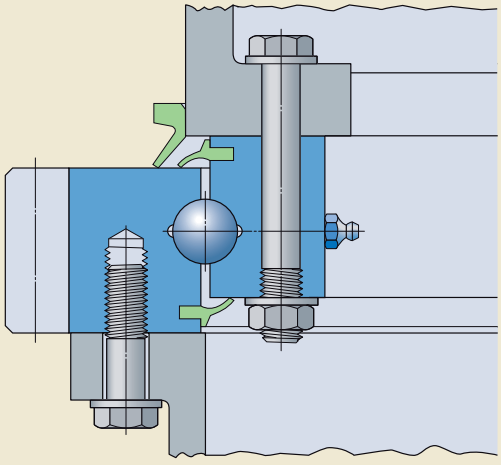

Fig. 10

Sheet steel cover

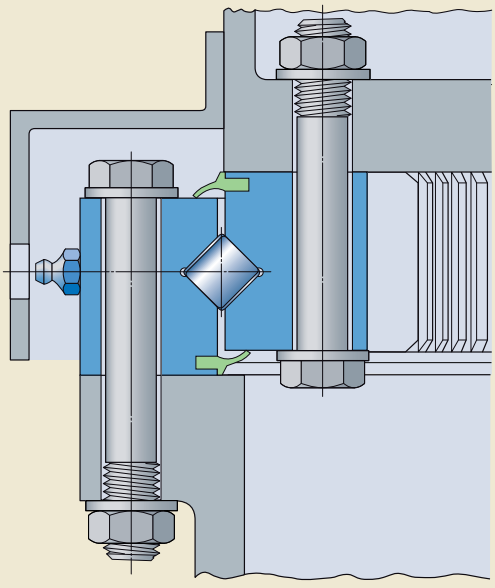

Slewing bearing gear

Generally, one ring of a slewing bearing comprises a 20° involute cylindrical gear (→ **fig. 1**). These gears have been proven to be the most suitable for heavily loaded slewing bearing arrangements running at low speeds. The module, the number of teeth, the reference diameter and, where necessary, the addendum modification of the gear are listed in the product tables. The permissible tooth forces are also listed in the product tables and are valid for unhardened gears, where

$T_{fnormal}$ = tangential tooth force for normal operating loads based on fatigue stress at the tooth base
T_{fmax} = maximum permissible tangential tooth force, based on fracture at the the tooth base

To provide proper gear performance, the pinions also should be furnished with a 20° involute spur gear. There is a choice between two types of pinion drive arrangements (→ **fig. 2**):

- a drive pinion fixed in relation to the slewing bearing axis (**a**)
- a drive pinion that rotates around the bearing axis (**b**)

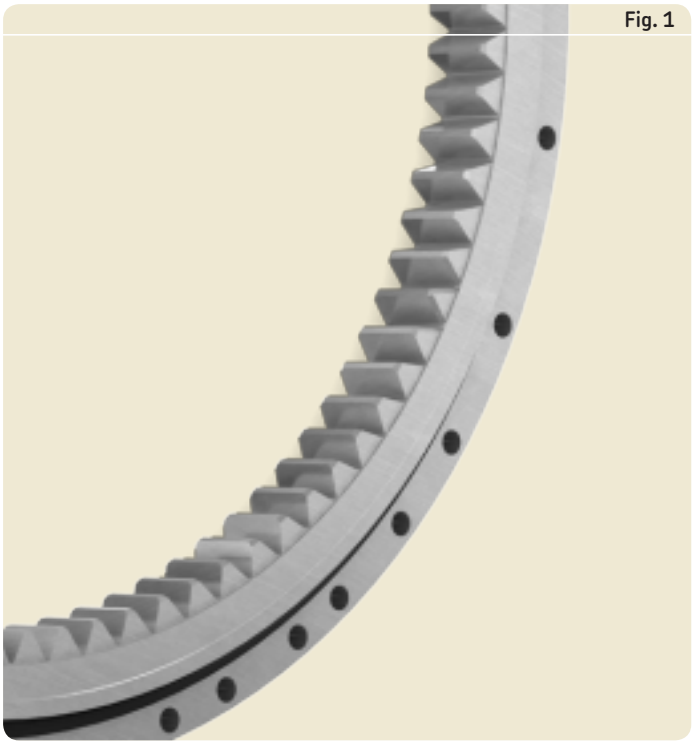

Fig. 1

20° involute cylindrical gear

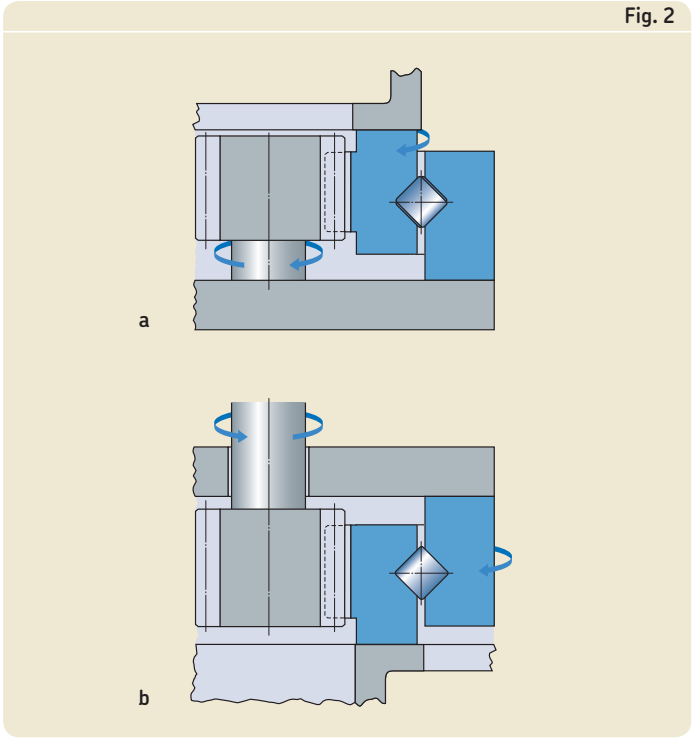

Fig. 2

Pinion drive arrangements

Gear backlash

Backlash is defined as the smallest gap between the trailing face of the driving tooth and the leading face of the tooth behind it on the driven gear (→ **fig. 3**). Gear backlash should be checked after positioning the pinion. The measurement should be made at the position where there is a blue marking on the gear (→ bearing markings from **page 40** to **page 45**). This mark indicates:

- the point of the largest distance to the centre, for a bearing with an external gear
- the point of the shortest distance to the centre, for a bearing with an internal gear

This blue marking should face the pinion when determining backlash. To do this, insert the blade of a feeler gauge between two teeth (→ **fig.3**). Applicable backlash values are provided in **table 1**. If the attained values are not within the guideline values, correct backlash by adjusting the centres of the gearwheels. Otherwise, there will be excess pressure between the two sets of gear teeth. Practical experience has shown that zero backlash can produce structural overloads, which will significantly reduce gear life.

Table 1 shows the recommended minimum backlash values for satisfactory meshing under heavy load. On a position of the bearing's circumference other than at the blue marking, higher backlash can occur. This is due to normal form tolerances and has no negative impact.

Fig. 3

Gear backlash

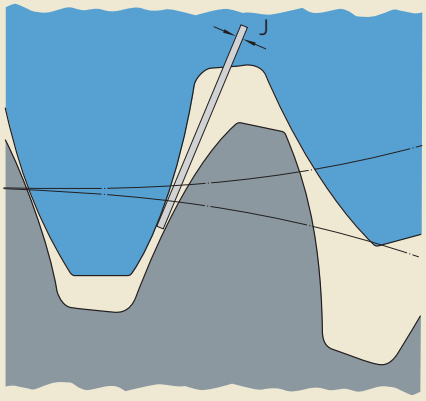

Pinions

The most commonly used pinions are hardened and ground. They should extend past the bearing gear on both sides by approximately 5 mm.

Additionally, a tip relief of 0,01 × module is recommended (→ **fig. 4**) to avoid meshing interference, which may occur at the tooth root area of unhardened bearing gear teeth driven by a hardened pinion. This type of wear (→ **fig. 5**), which manifests itself as increased noise, is not really harmful. The degree of wear will become progressively smaller and the noise level should decrease.

Fig. 4

Pinion tooth tip relief

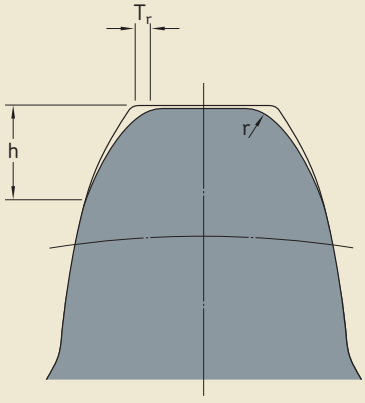

Tip relief T_r = 0,01 × module
Height h = 0,4 ... 0,6 × module
Radius r = 0,1 ... 0,15 × module

Table 1

Required backlash at blue marking

Module		Backlash J	
over	incl.	min	max
mm		mm	
3,15	**6,3**	0,25	0,375
6,3	**10**	0,3	0,45
10	**12,5**	0,45	0,675
12,5	**16**	0,6	0,9
16	**20**	0,8	1,2
20	**25**	1	1,5

Fig. 5

Meshing interference

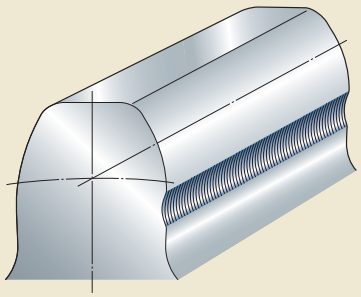

Lubrication

For a slewing bearing to function properly and provide maximum service life, proper relubrication and regular maintenance intervals are essential. The primary function of a lubricant is to create an oil film between the rolling elements and raceways as well as between the gears, to prevent metal-to-metal contact.

Slewing bearings are generally lubricated with grease, which also provides added protection against the ingress of water and contaminants.

As slewing bearings normally operate at slow speeds, the free space between the rings can be filled entirely with grease.

Bearing lubrication

Unless otherwise specified, SKF slewing bearings are filled with an NLGI class 2 mineral oil based EP-grease containing a lithium soap thickener. This grease provides extremely good corrosion inhibiting properties and excellent mechanical stability. The grease has a temperature range of –20 up to +110 °C. Reliable lubrication according to the SKF traffic light concept is in the operating temperature range of +30 to +110 °C.

SKF recommends relubricating slewing bearings with SKF LGEP 2, a mineral oil based grease with a consistency of 2 on the NLGI scale. In special cases, where the bearing must operate reliable at low temperature, an NLGI grease with a consistency of 1 or 0 can be used.

Information about appropriate SKF greases can be found in **table 1**.

Slewing bearings should be greased immediately after mounting, until fresh grease starts to escape from the seals around the whole circumference.

Gear lubrication

The gear of a new bearing is normally coated with a preservative but is not greased.

After the bearing has been mounted, a lubricant needs to be applied to the gear. This lubricant, which is usually grease, should have

- a base oil viscosity of at least 500 mm^2/s at 40 °C
- good adhesive properties
- a high resistance to water washout.

In addition, the grease should be able to withstand temperatures of at least +100 °C.

Table 1

SKF greases for slewing bearings

SKF designation	Permissible temperature range (°C) min	max	Remark
LGEP 2	-20	+110	
LGLT 2	-50	+110	
LGGB 2	-20	+110	Bio degradable
LGHB 2	-20	+150	

Relubrication intervals and quantities

Bearings

Relubrication should always be undertaken at a time when the condition of the existing lubricant is still satisfactory. This time depends on many related factors including bearing type and size, operating temperature, frequency of operation, grease type and the bearing environment. In order to facilitate good grease distribution, the bearing should always be relubricated while it is in operation.

The relubrication interval t_f for the raceway of slewing bearings mounted on a horizontal support structure under normal and clean conditions can be obtained from the blue line of **diagram 1**, as a function of the number of operating hours per week.

The relubrication interval t_f is an estimated value, valid for an operating temperature of 70 °C, using a good quality grease. If there are severe operating conditions, such as very dirty or damp environments or if operating temperatures exceed 70 °C, more frequent relubrication may be necessary. For additional information, contact the SKF application engineering service.

The quantity of fresh grease depends on the bearing size. Suitable quantities for single row slewing bearings can be obtained from the red line of **diagram 2** as a function of the mean raceway diameter.

The new grease must be identical to, or miscible with, the grease already contained in the bearing. A mixture of two immiscible greases will impair the efficiency of the lubricant.

Gears

The relubrication interval, t_f, for the gears can be obtained from the red line of **diagram 1** as a function of the number of operating hours per week.

Before regreasing the gear, the teeth should be cleaned of any impurities.

The lubricant can be brushed or sprayed onto the gear or by any other suitable method, e.g. a SKF lubricating pinion (→ **fig. 3** on **page 31**). The grease quantity depends on the method chosen.

Diagram 1

Relubrication interval t_f for slewing bearings and gears

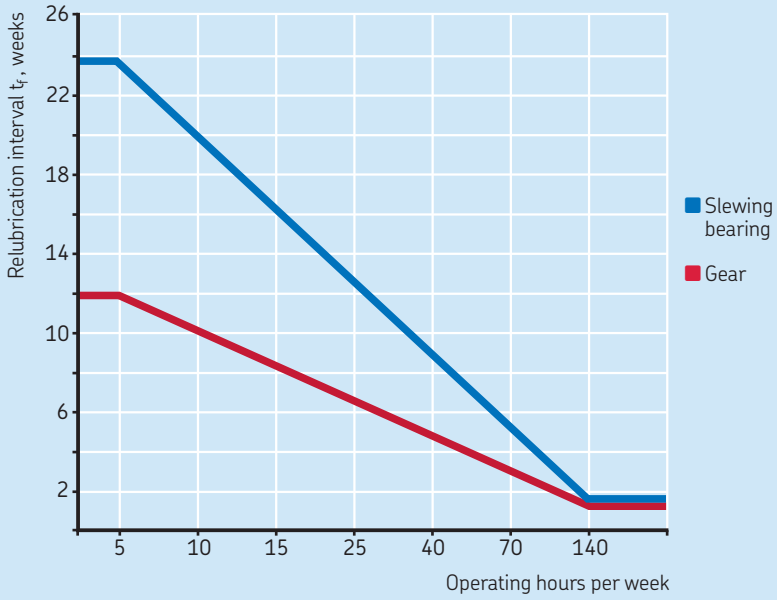

Diagram 2

Suitable grease quantities for bearing replenishment

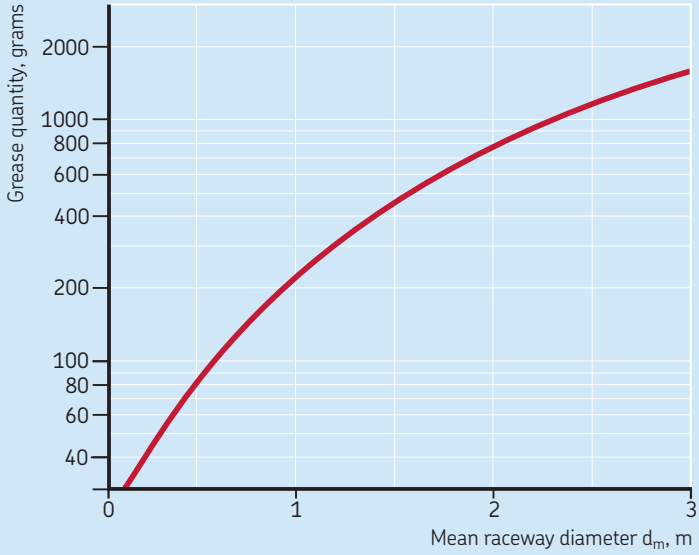

Relubrication procedures

Manual relubrication

Light series and medium size bearings can be relubricated through four equally spaced cone type grease fittings to DIN 71412:1987, design A, in the inner and/or outer ring (→ **fig. 1**). Appropriate grease guns are available from SKF. Additional information about SKF maintenance products can be found in the publication MP3000 "SKF Maintenance and Lubrication Products" or online at www.mapro.skf.com.

Automatic relubrication

An automatic relubrication system is typically used when the calculated relubrication interval is very short, e.g. due to contamination, or when the bearing is not easy to access.

When using automatic relubrication, check whether the grease can be adequately pumped through the ducts at the prevailing ambient temperature.

Automatic lubrication can be achieved via single-point automatic lubricators, multi-point lubricators or centralized lubrication systems, depending on the demands of the application. SKF SYSTEM 24 is a single-point lubricator that can be screwed directly into one of the threaded holes used for grease fittings (→ **fig. 2**). SKF SYSTEM Multipoint can lubricate up to 8 lubrication points and is refillable. Additional information about SKF automatic lubricators can be found in the publication MP3000 "SKF Maintenance and lubrication products" or online at www.mapro.skf.com. Centralized lubrication systems (→ **fig. 3**) typically consist of:

- grease pumps (**1**), one to grease the bearing and one to grease the gear, optionally with electronic control and/or an exchangeable container
- a progressive distributor (**2**)
- a lubricating pinion (**3**) for automatic and even lubricant distribution across the entire gear
- a lubricant collector (**4**) for the environmentally friendly removal of used lubricant from the gear

Additional information about SKF lubrication systems is available online at www.skf.com, or contact the SKF application engineering service.

Fig. 1

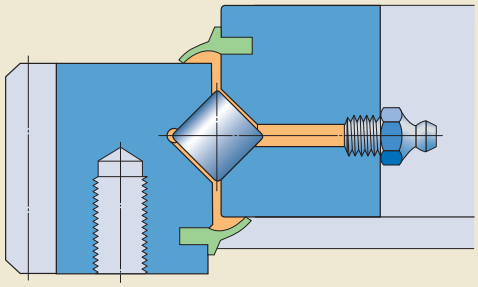

Manual relubrication via grease fittings

Fig. 2

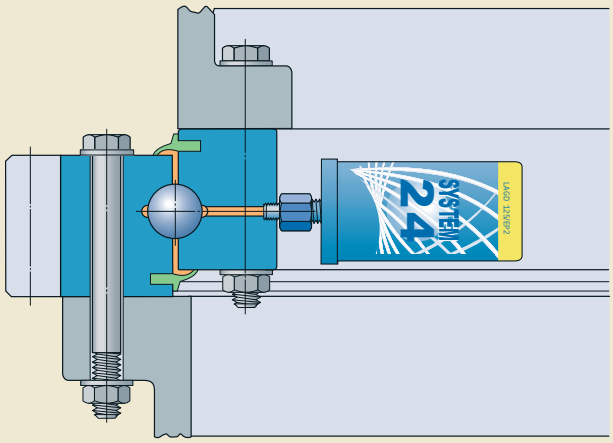

Continuous relubrication via single-point automatic lubricators

Continuous relubrication via centralized lubrication systems

Fig. 3

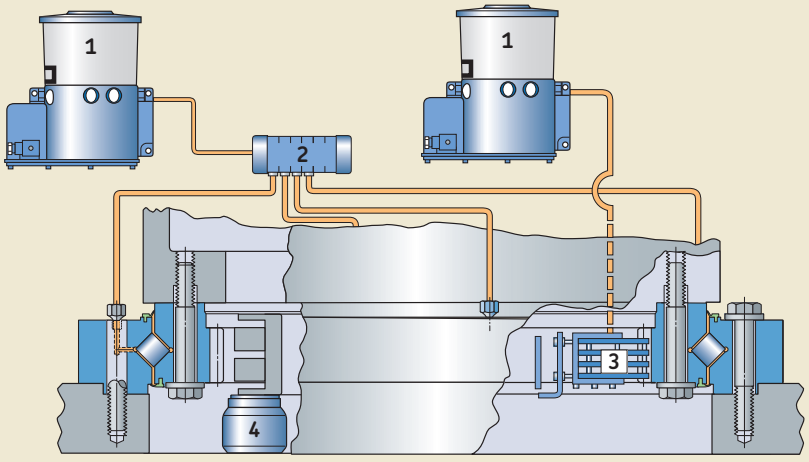

1



2

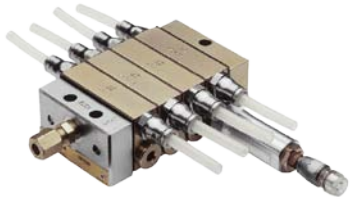

3



4



Application data sheet for slewing bearing arrangements

Customer

Company:

Street, ZIP code, City:

Contact:

Telephone: Telefax: Email:

Date of inquiry: Date of reply required:

Signature:

Delivery requirements

Required quantities: Quantity per year: Date of first delivery:

Special delivery requirements:

Application

Description of application:

Position of axis: ☐ Vertical ☐ Horizontal ☐ Changing

Position of bearing: ☐ Supported ☐ Suspended

Existing/chosen bearing, Designation:

Bearing load

Type of load	**Operating conditions**					
	Normal load amount	% of time	**Maximum load** amount	% of time	**Maximum** test load	**Extreme loads** (out of operation)
Axial loads F_a (kN) parallel to axis of rotation						
Radial loads F_r (kN) at 90 ° to axis of rotation						
Resulting moment M_t (kNm)						
Rotational speed (r/min)						
Slewing working angle (degrees)						

Tangential forces

Tooth force (kN): Normal force: | Maximum force: | Number of drives:

Motion

☐ Continuous rotation ☐ Slewing motion ☐ Intermittent

Dimensional limitations

Outside diameter (mm): | Preferred: | Minimum/maximum:

Inner diameter (mm): | Preferred: | Minimum/maximum:

Bearing height (mm): | Preferred: | Minimum/maximum:

Gear data

☐ Internal gear ☐ External gear ☐ Without a gear

Reference diameter (mm): | Preferred: | Minimum/maximum:

Tooth height (mm): | Preferred: | Minimum/maximum:

Module: | Preferred: | Minimum/maximum:

Sealing arrangements

On top: ☐ Yes ☐ No ☐ Internal ☐ External

At the bottom: ☐ Yes ☐ No ☐ Internal ☐ External

Attachment bolt hole

Outer ring ☐ Through holes ☐ Tapped holes ☐ Number of bolts:

Bolt hole diameter (mm): | Preferred: | Minimum/maximum:

Bolt hole pitch circle diameter (mm): | Preferred: | Minimum/maximum:

Lubrication of raceways

☐ Grease ☐ Manual relubrication ☐ Central grease lubrication system

☐ Oil bath ☐ Central oil lubrication system ☐ Other

Lubrication of gear

☐ Manual grease lubrication ☐ Central grease lubrication system

Temperatures

Operating temperatures (°C): ☐ Minimum ☐ Maximum

Ambient temperatures (°C): ☐ Minimum ☐ Maximum

Special requirements

Centring recesses / Required accuracy / Required lubricant / Ring material / Inspection and/or certification requirements

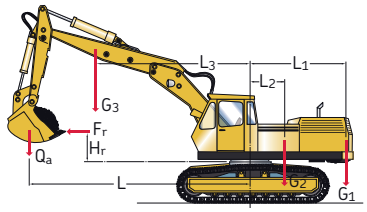
L3
L1
L2
De
G3
Fr
Hr
Qa
L
G2
G1

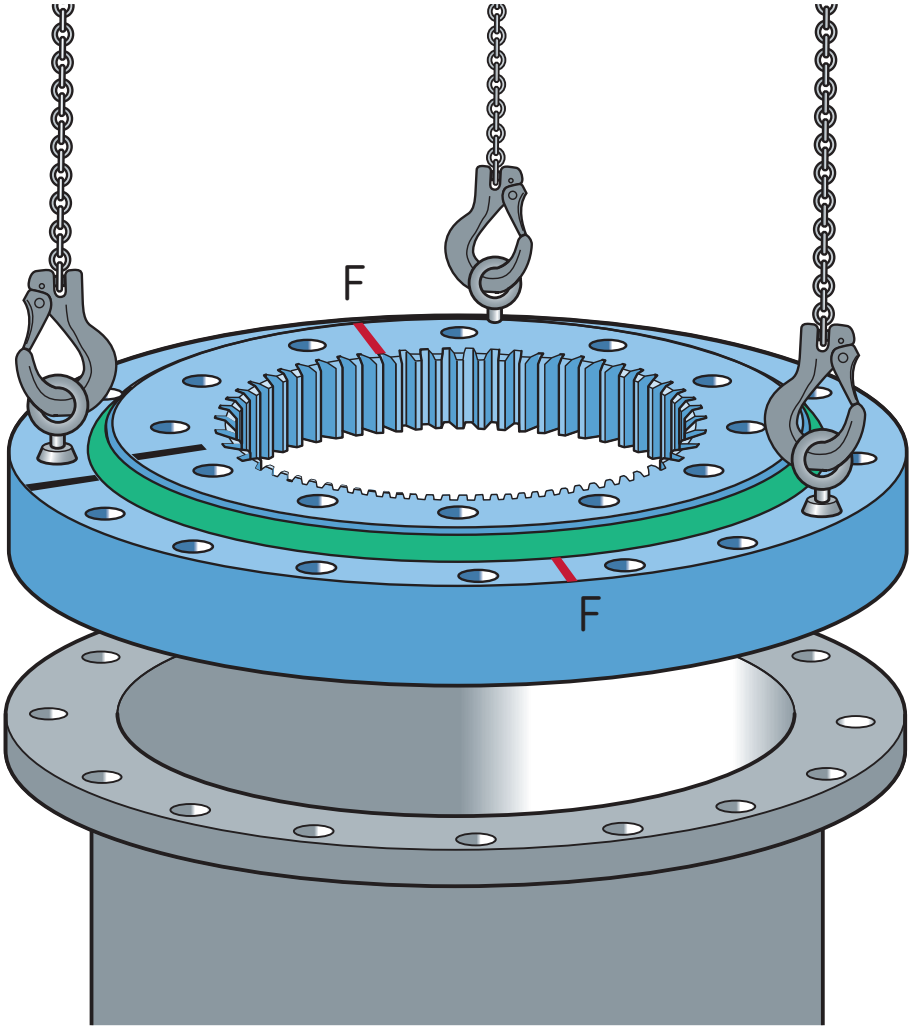
F
F

Mounting, inspection and storage

40 General information

40 Preparations for mounting
40 Bearing handling
40 Bearing markings

41 Attachment bolts
41 Tightening methods

42 Mounting recommendations

46 Trueing up

47 Inspection

47 Inspecting axial titling clearance

48 Inspecting bolt joints

48 Seal inspection

49 Storage

General information

It takes skill and experience to maximize bearing performance and reduce the risk of premature failures. Experience means choosing the correct mounting method and using the correct tools for the job.

The information provided in the following section is quite general and primarily identifies the factors that must be considered in order to facilitate the mounting process. The information is valid for single row slewing bearings used in typical applications. For additional information, contact the SKF application engineering service.

Mounting should, wherever possible, be carried out in a dry, clean environment. When slewing bearings have to be mounted in an unprotected area, which is often the case, steps should be taken to protect the bearing and its associated components until installation is complete.

As is the case with all bearings, never hit the rings or seals directly with a hammer or any other hard object. Also, never apply a mounting force directly through the rolling elements.

Preparations for mounting

Before mounting, all necessary parts, tools, equipment and data need to be on hand. SKF also recommends checking all drawings and instructions to determine that each component is assembled in the correct order.

Bearing handling

To reduce the risk of injury, wear gloves when mounting slewing bearings. Also, use carrying and lifting tools that are specially suited for mounting such bearings.

Slewing bearings should be transported and stored flat on a surface that extends over the whole side face of the bearing (→ **fig. 1**). When the bearing is to be moved or held in position, appropriate lifting tackle should be used (→ **fig. 2**). Eyebolts, for example, should only be subjected to a load in the direction of the shank axis. Also, keep in mind when using eyebolts that the hole size is limited and only designed to accommodate the weight of the bearing. The bearing should never be weighted down with tools or associated components. Slewing bearings should never be suspended from a single point using a sling or one bolt, because the rings are relatively thin-walled and the weight of the bearing could deform the rings.

Like other rolling bearings, slewing bearings should remain in their original, unopened package until immediately before mounting so that they will not be exposed to contaminants like dirt unnecessarily. The preservative coating applied to a new bearing from the factory should be removed from side faces that will be in contact with the support surface.

Bearing markings

To facilitate correct installation, the inner and outer rings of SKF slewing bearings are marked on one side face according to **fig. 3**.

A **red marking** and the letter "**F**" indicate a small unhardened area in the raceway – the soft zone on the raceway between the beginning and end of induction hardening. Whenever possible, this area coincides with the position of the hole that is needed for ball or roller loading and is closed with a plug.

To facilitate backlash adjustment, a **blue marking** and the letter "**B**" on the geared ring locates the smallest gap between two teeth.

A **black marking** on a bearing with a low sectional height relative to its diameter, indicates the minimum out-of-roundness of the assembled bearing.

Fig. 1

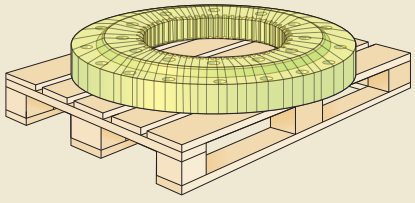

Proper bearing transportation

Fig. 2

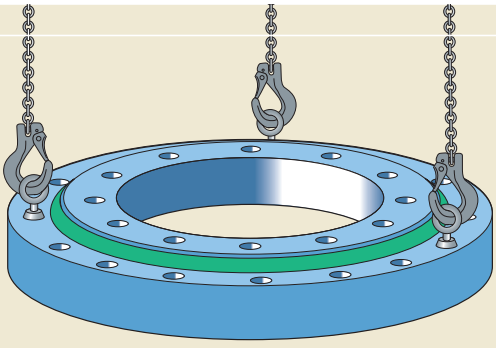

Appropriate lifting tackle

Attachment bolts

Only bolts and nuts as specified in the technical documents or mounting instructions should be used. Recommendations are provided in the chapter “Attachment bolts” on **page 22**.

Under normal operating conditions and when the recommended flat washers are used, the recommended bolt torque values provide a reliable and safe connection to the support surface and the application.

Tightening methods

All bolts and nuts should be tightened with a highly accurate torque wrench (→ **fig. 4**) or a hydraulic bolt tensioner (→ **fig. 5**) in at least two stages as described in the section “Mounting recommendations” (→ **fig. 40**). SKF recommends that whenever possible, the bolts should be tightened using an HYDROCAM hydraulic bolt tensioner. This hydraulically operated bolt tensioner enables bolts to be installed accurately without applying torque. The tensioner also enables

- bolted joints with uniform preload on all bolts
- the optimum exploitation of the yield strength of the bolt
- the use of high-strength bolts.

The HYDROCAM bolt tensioner was designed specifically to install the bolts on slewing bearings. These tensioners are available in four different designs. The standard bolt tensioner (→ **fig. 5**) consists of

- a skirt (**a**)
- a hydraulic body (**b**)
- a brace (**c**)
- a socket for standard nuts (**d**) to hand tighten the nut.

For additional information about HYDROCAM bolt tensioners, contact the SKF application engineering service.

Fig. 3

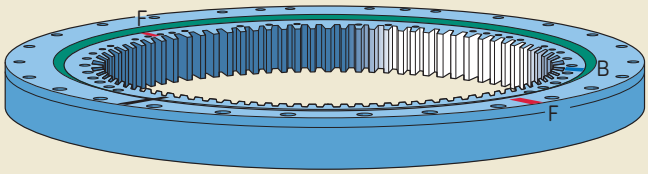

Bearing markings

Fig. 4

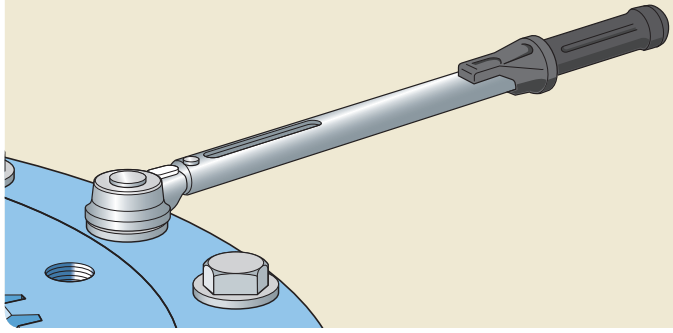

Appropriate torque wrench

Fig. 5

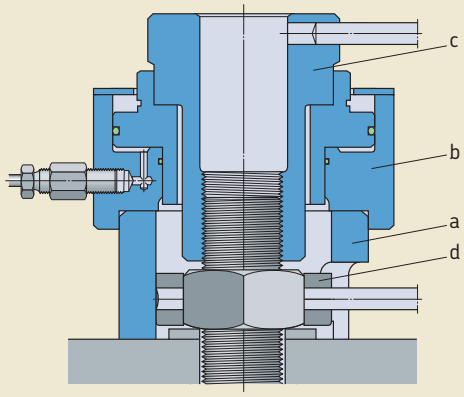

HYDROCAM bolt tensioner

Mounting recommendations

Correct mounting of a slewing bearing depends on the design of the application and the type of slewing bearing. The following information is quite general, but provides basic information proven in the field. For additional information, contact the SKF application engineering service.

1 Remove any burrs on the seat surfaces with emery cloth or a honing tool (→ **fig. 1**).
2 Clean the seat surfaces with compressed air. Make sure that the surfaces of the support structure and the bearing are clean and dry (→ **fig. 2**).
3 Check the form accuracy of the support structure (→ **fig. 3**) according to the information in the section "Associated components" starting on **page 21**.
4 Position the bearing on the first support surface. The **red marking F** on the ring must be arranged at a 90° angle to the axis of the maximum loaded zone, provided that the axis can be determined or estimated (→ **fig. 4**).

Fig. 1

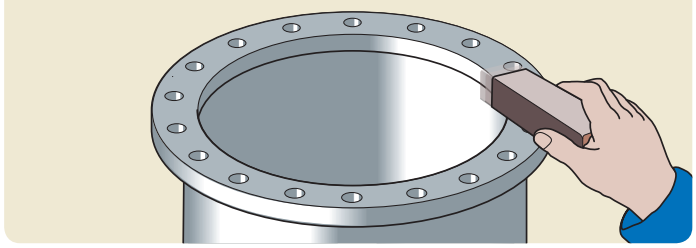

Fig. 2

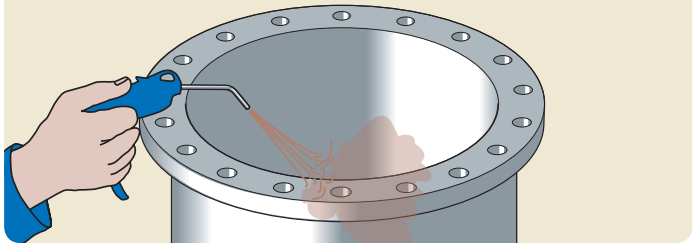

Fig. 3

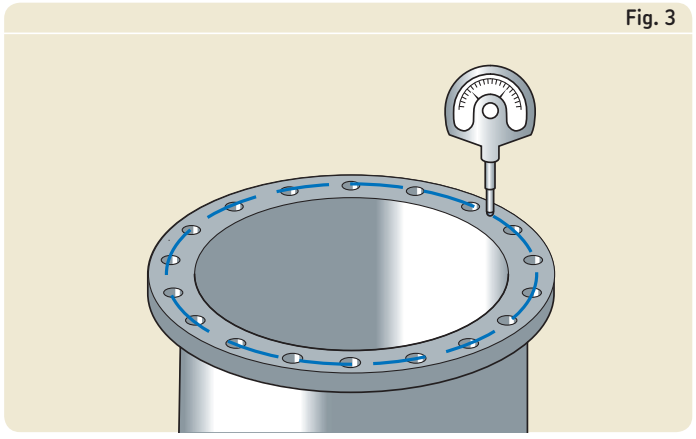

Fig. 4

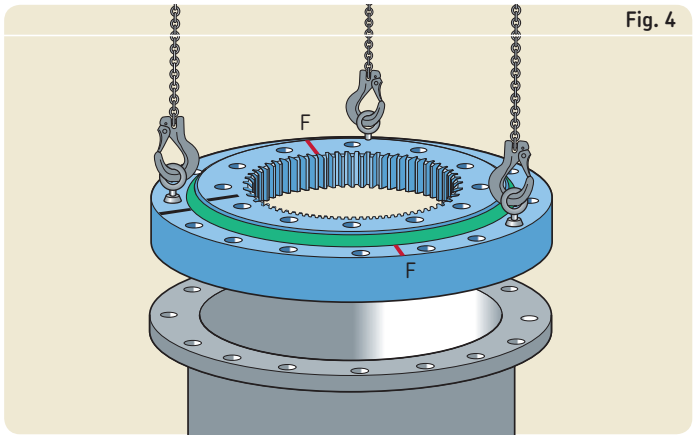

5 Adjust the bearing so that the bolt holes in the ring coincide with those of the support structure. Check that the bearing is level over the entire seat surface (→ **fig. 5**).
6 Coat the bolt threads with a thin layer of light oil.
7 Fit the bolts, washers and nuts and manually tighten them (→ **fig. 6**).
8 In a first round, tighten the bolts or nuts (→ **fig. 7**) to between 40 and 50 % of the prescribed value, following the tightening pattern (→ **fig. 8**). In a second round, fully tighten the bolts or nuts to the prescribed preload, following the tightening pattern.

Fig. 5

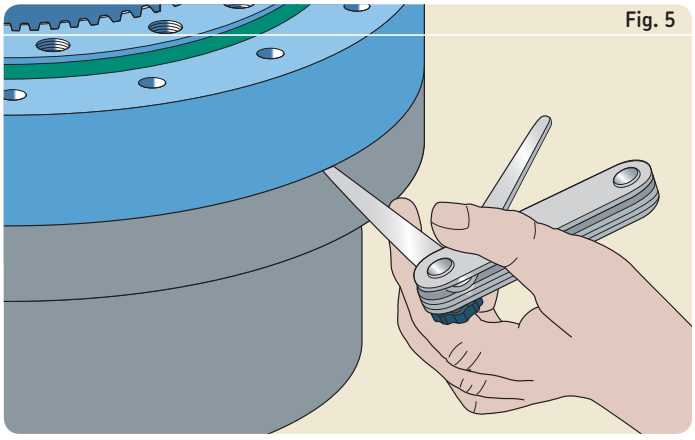

Fig. 6

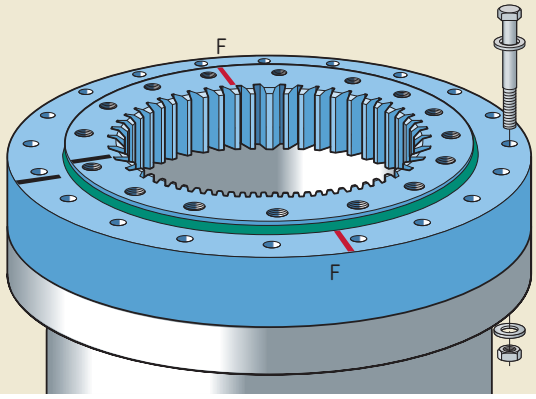

Fig. 7

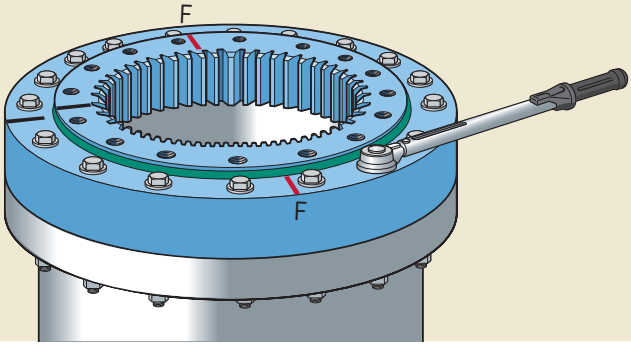

Fig. 8

Bolt tightening pattern

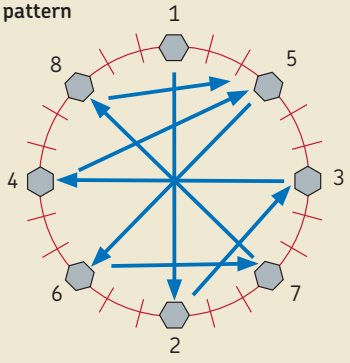

9 Check for correct installation by turning the “free” ring (→ **fig. 9**). The torque, which might be high due to preload, grease and friction of the seals, should not show any excessive variation or “tight spots” during rotation. If the torque varies excessively, check the ovality of the bearing, and correct if necessary.

10 Position the second support structure with its support surface on the free bearing ring. The **red marking F** on this ring must be at 180° from the **red marking F** of the mounted ring (→ **fig. 10**).

11 Adjust the position of the support structure so that the bolt holes coincide with those of the bearing ring.

12 Coat the bolt threads with a thin layer of light oil.

13 Fit the bolts, washers and nuts and tighten them, following **steps 7** and **8**.

14 Check the installation by rotating the assembled bearing arrangement. The torque should not show any excessive variation or “tight spots” during rotation (→ **fig. 11**).

15 Measure the tilting clearance of the installed bearing in the main load line with the aid of a dial gauge by applying a defined tilting moment (→ **fig. 12**). Check 180° from the measuring point to be sure that the radial clearance is virtually zero. Mark the measuring points on the adjacent component and note the measured clearance on the installation report.

Fig. 9

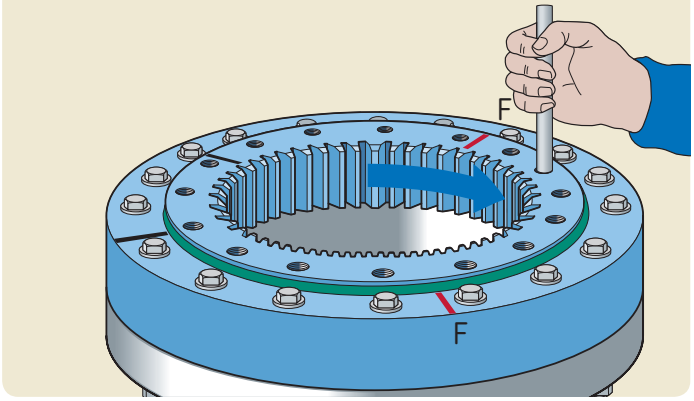

Fig. 10

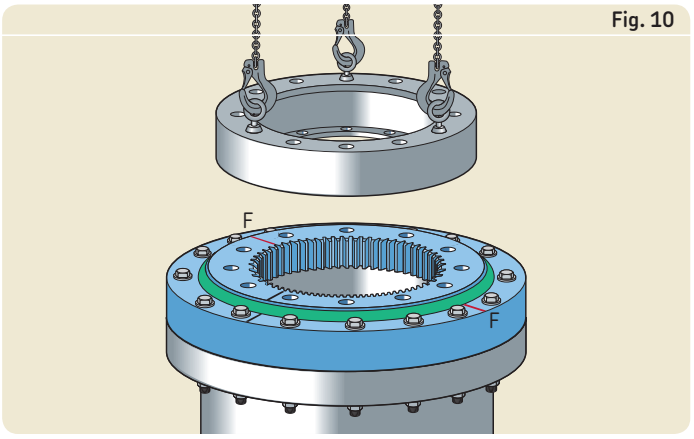

Fig. 11

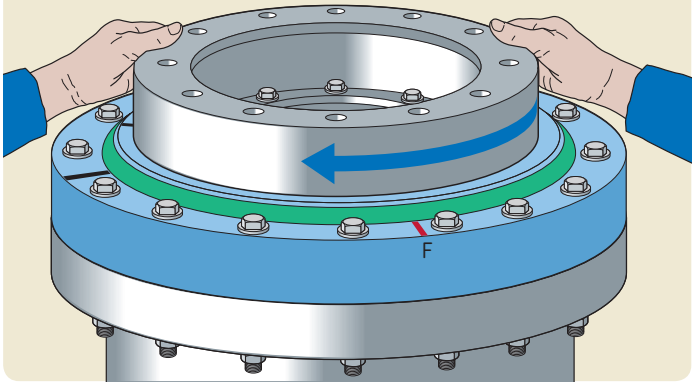

Fig. 12

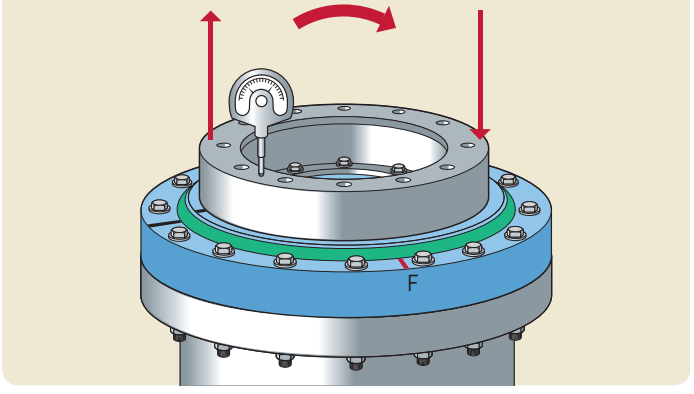

16 For geared slewing bearings, check the backlash, using a feeler gauge, after positioning the pinion (**fig. 13**). The measurement has to be made at the **blue mark** on the bearing gear, which indicates the point where the backlash is smallest. Required values for backlash are listed in **table 1** on **page 29**. If these values are not attained, correct the backlash by adjusting the distance between the centres of the gear wheels.

17 Supply grease to the raceway via the grease fittings provided in one of the bearing rings (**fig. 14**). If applicable, rotate the bearing during the greasing operation. If a centralized lubricating system will be used, connect the lubricating tubes to the bearing.

18 Lubricate the gear. (→ **fig. 15**)

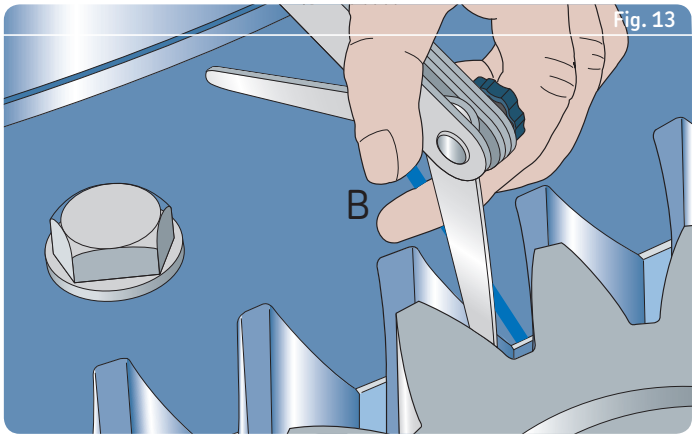

Fig. 13

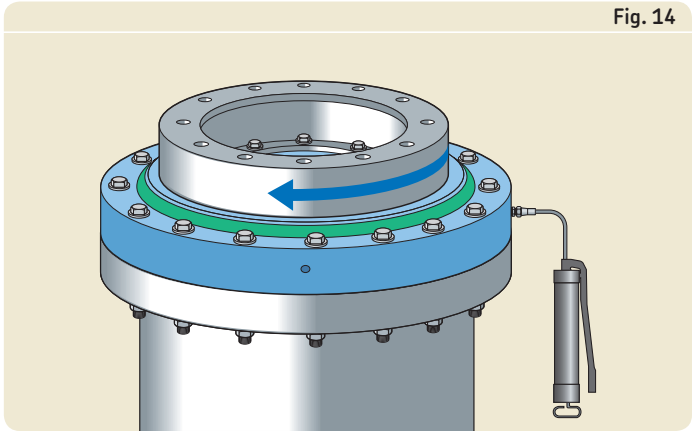
Fig. 14

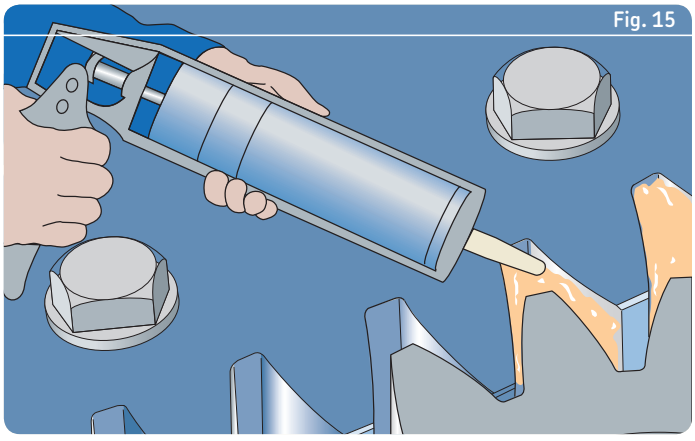
Fig. 15

Trueing up

This section applies only to slewing bearings with a mean raceway diameter above 2 000 mm and having a black marking on each ring.

1 Align the black markings by rotating one of the rings (→ **fig. 16**).
2 Measure the ovality of each ring at 6 points (30° intervals), e.g. on the centring diameters d_{1c}, d_{2c}, D_{1c}, or D_{2c}, respectively (→ **fig. 17**). The ovality of a bearing ring should not exceed 0,5 mm for bearings with a mean raceway diameter between 2 000 and 3 000 mm.
3 Trueing up the bearing is achieved through elastic deformation of the bearing rings. To reduce the ovality, only small adjustments are required, which can be achieved by means of small jacks (→ **fig. 18**) or a star shaped tool.
4 After trueing-up, tighten the bolts of the adjusted ring to the prescribed preload (→ **fig. 4**), following the mounting recommendations starting on **page 40**.
5 Remove the adjustment tool (→ **fig. 19**).
6 Check for correct mounting by turning the "free" ring (→ **fig. 20**). The torque, which might be high due to preload, grease and friction of the seals, should not show any excessive variation or "tight spots" during rotation.

Note: The tools that can be used for trueing-up the bearing are rather simple. They can consist, for example, of a bar with adjustable screws at the ends, to expand the inner ring. Only minimal pressure should be applied against the bearing rings.

Fig. 16

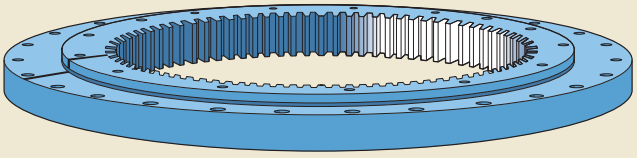

Fig. 17

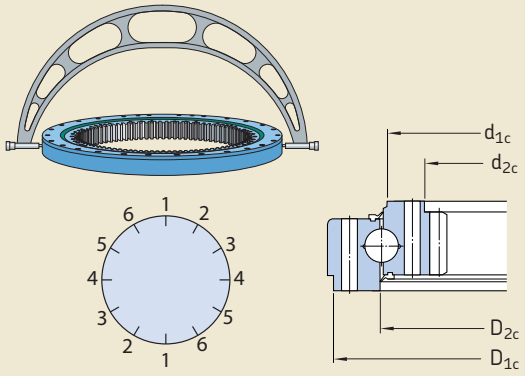

Fig. 18

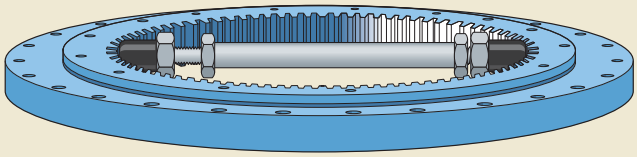

Fig. 19

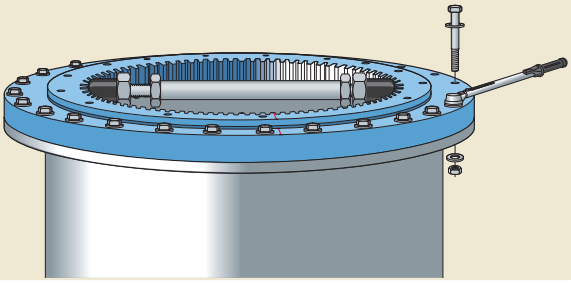

Fig. 20

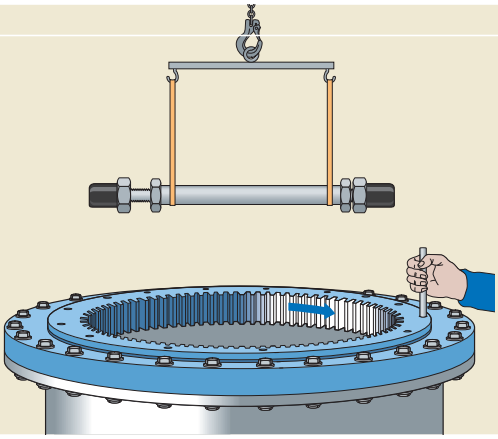

Inspection

As with all important machine components, slewing bearings should be cleaned and inspected regularly. Maintenance intervals depend entirely on the operating conditions. In applications where there are heavy loads and/or high levels of contamination, decrease the time between inspections.

To avoid accidents or injuries during the inspection process, be sure that the moving part of the slewing bearing arrangement is balanced and that no tilting moments or radial loads are present.

Inspecting axial tilting clearance

To determine and record wear in slewing bearings, SKF recommends checking the axial tilting clearance after 2 000 operating hours, or at least once a year. Since there is a definite relationship between raceway wear and increased axial clearance, measure the axial clearance prior to operation. This is normally done during the bearing installation process (→ **fig. 1**). The results of the first and any subsequent measurements should be noted and recorded as a graph.

For applications where measurement of the axial tilting clearance is not possible, the bearing height reduction (→ **fig. 2**) can be used to define raceway wear:

$$\Delta_{Hw} = H_{s0} - H_{s1}$$

where
Δ_{Hw} = bearing height reduction, mm
H_{s0} = bearing height after installation, mm
H_{s1} = bearing height after operation, mm

Also, in this case, measurement values of the bearing height are needed after installation and prior to start-up. The procedures used to take measurements should be the same each time. Guideline values for the permissible bearing height reduction as a function of the rolling element diameter are listed in **table 1**. For additional information, contact the SKF application engineering service.

Fig. 1

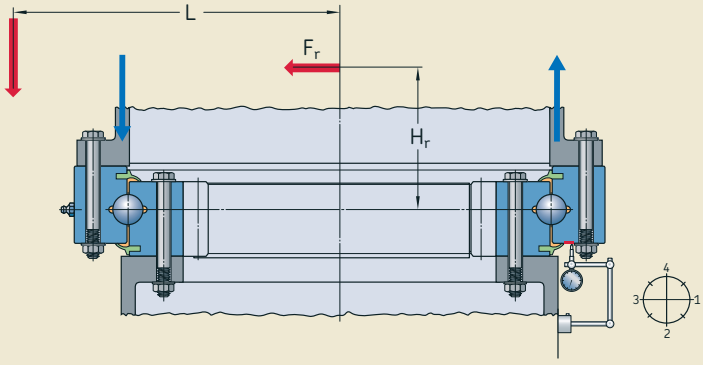

Inspecting axial tilting clearance

Fig. 2

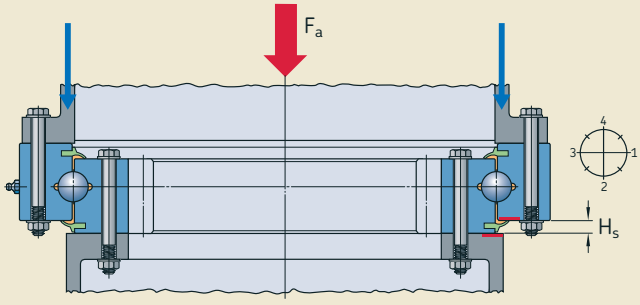

Measuring the bearing height reduction

Table 1

Permissible bearing height reduction

Rolling element diameter[1] D_w	Bearing height reduction Δ_{Hw}	Rolling element diameter[1] D_w	Bearing height reduction Δ_{Hw}
mm	mm	mm	mm
14	1	**25**	1,8
16	1,2	**30**	2,2
20	1,5		

[1] See "Designation system" on **pages 56** and **87**. Light series four-point contact ball slewing bearings incorporate 20 mm diameter balls. Rolling element diameter of customized bearings is supplied on request

Fig. 3

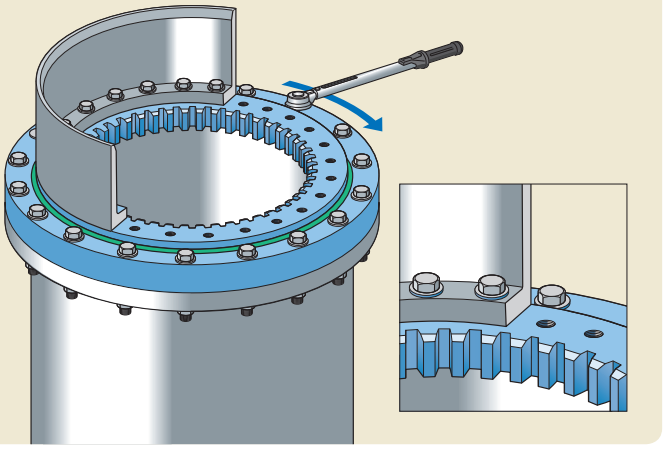

Retightening the bolts

Fig. 4

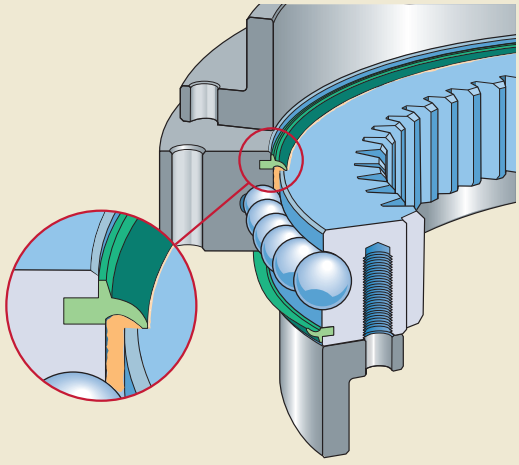

Seal inspection

Note: The instructions for inspecting bolt joints should not be considered as a substitute for standards that may apply in countries where the slewing bearings are operated. When replacing a slewing bearing, always replace the bolts too.

Inspecting bolt joints

Special attention must be paid to the bolt joints. Depending on the application, all bolts need to be retightened between the third week and twelve weeks of operation. (→ **fig. 3**).

Before start-up after an extended period of machine downtime, after 2 000 operating hours or at least once a year, all attachment bolts of a slewing bearing arrangement should be retightened. In cases where

- a bolt has lost 20% or more of the prescribed preload, then the actual bolt(s) as well as the two adjacent ones, must be replaced
- at least 20% of the bolts of a single ring are found to have less than 80% of the prescribed preload, then all the bolts must be replaced.

Never loosen or exchange more than one bolt at a time. Use the same tightening method, the same tools and the same type of bolts employed originally.

Seal inspection

The seals or sealing arrangements should be inspected at least every six months during normal maintenance. If necessary, clean the seals and if there are signs of damage, replace the seal to prevent any contaminants from entering the bearing.

Furthermore, check that there is always a sufficient amount of grease around the entire circumference of the sealing lip (→ **fig. 4**).

Storage

Slewing bearings can be stored in their original package (→ **fig. 1**) for approximately one year, provided that the relative humidity in the storeroom does not exceed 60% and there is no vibration and no great fluctuation in temperature.

If slewing bearings have to be stored for periods longer than one year, this has to be specified when ordering, because special provisions have to be made during packaging (→ **fig. 3**).

The protection of the bearing enables storage at about 20 °C at a maximum relative humidity of 75% during the time mentioned on the label attached to the packaging.

Slewing bearings should only be stored lying flat on a surface where the entire side face is supported (→ **fig. 2**). If stored in the upright position, the weight of the rings and rolling elements can result in permanent deformation.

For additional information about storage, contact the SKF application engineering service.

Fig. 1



Correct storage of bearings

Fig. 2

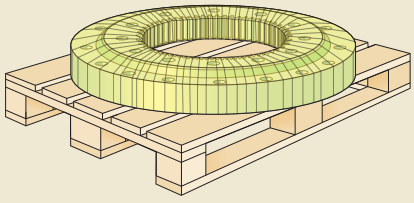

Standard wrapping of an SKF slewing bearing

Fig. 3

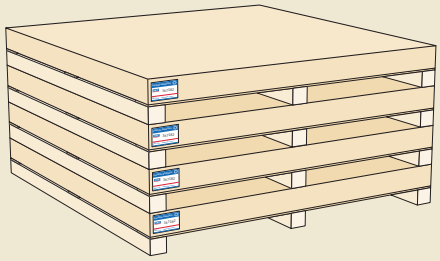

Wooden package of slewing bearings



Single row four-point contact ball slewing bearings

52 Product data – general

52 General

52 Design

53 Light series single row four-point contact ball slewing bearings

54 Medium size single row four-point contact ball slewing bearings

55 Customized single row four-point contact ball slewing bearings

56 Bearing data – general
56 Dimensions
56 Tolerances
57 Axial clearance
57 Material
57 Corrosion protection

58 Gears

58 Seals

59 Lubrication

60 Designation systems

62 Product tables

Light series four-point contact ball slewing bearings
62 with an external gear
64 with an internal gear
66 without a gear

Medium size four-point contact ball slewing bearings
68 with an external gear
72 with an internal gear
76 without a gear

Customized four-point contact ball slewing bearings
80 with an external gear
82 without a gear

Product data – general

General

Single row four-point contact ball slewing bearings are simple in design. They are particularly versatile and offer many advantages for applications where there are light-to-medium axial, radial and moment loads.

Single row four-point contact ball slewing bearings are the most widely used slewing bearing type. SKF manufactures them in many executions and sizes.

The bearings listed in the following product tables represent only a part of the single row four-point contact ball slewing bearings that are manufactured by SKF on a regular basis or within short lead times.

The actual SKF manufacturing range of customized single row four-point contact ball slewing bearings is much more extensive than what appears in the product tables.

Each custom variant is designed to accommodate special technical demands, which include but are not limited to:

- special ring material
- load carrying ability
- speed capability
- custom bolt patterns
- running accuracy

A customized slewing bearing that meets your specific requirements might already exist. As a result, SKF recommends contacting the application engineering service very early in the design stage so that SKF engineers, with their in-depth product and application knowledge, can help you find the most suitable bearing arrangement for your application.

Design

Single row four point contact ball slewing bearings consist of a one-piece inner and outer ring and a set of spacers, protected by integral seals. The balls are inserted into the bearing via a hole in one of the two rings and are separated by polyamide spacers. After loading the ball set and spacers, the hole is closed with a plug that conforms to the raceway contour.

The SKF range of single row four-point contact ball slewing bearings is divided into three series:

- light series four-point contact ball slewing bearings
- medium size four-point contact ball slewing bearings
- customized four-point contact ball slewing bearings



Light series single row four-point contact ball slewing bearings

SKF light series single row four-point contact ball slewing bearings have a thin and fixed cross section, irrespective of the inner or outer diameter. The inner and outer rings have a standardized number of equally spaced holes for attachment bolts, to simplify installation.

The SKF light series single row four-point contact ball slewing bearings (→ **fig. 1**) listed in the product tables include bearings with a mean raceway diameter ranging from 411 to 1 091 mm and are available with any of the following gear configurations:

- an external gear (**a**), RKS.21 series designation
- an internal gear (**b**), RKS.22 series designation
- without a gear (**c**), RKS.23 series designation

These lightweight general-purpose slewing bearings provide a cost-effective solution for light to medium-duty arrangements, which do not require high precision. Examples include: aerial work platforms, robotics, industrial positioners, turntables and some material handling equipment.

Light series single row four-point contact ball slewing bearings can be operated at circumferential speeds up to 2 m/s.

Fig. 1

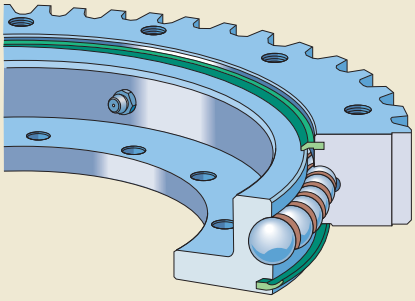

a

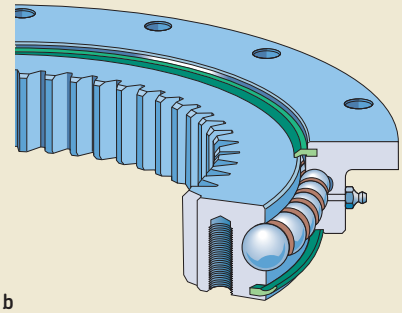

b

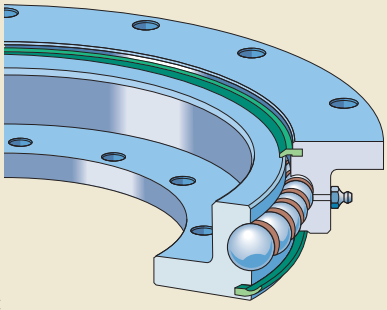

c

Fig. 2

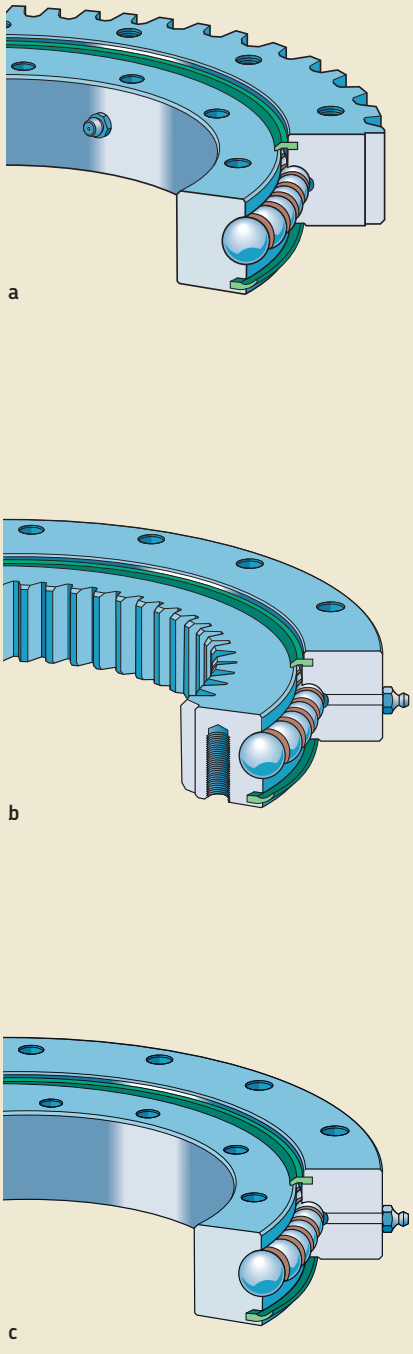

Medium size single row four-point contact ball slewing bearings

SKF medium size single row four-point contact ball slewing bearings have a strong, full-size gearless ring. Depending on their size, they are available with two different fixed cross sections within the series. The inner and outer rings have a standardized number of equally spaced holes for attachment bolts, to simplify installation.

The SKF medium size single row four-point contact ball slewing bearings (→ **fig. 2**) listed in the product tables include bearings with a mean raceway diameter ranging from 414 to 1 904 mm and are available with any of the following gear configurations:

- an external gear (**a**), RKS.061 series designation
- an internal gear (**b**), RKS.062 series designation
- without a gear (**c**), RKS.060 series designation

These slewing bearings are available from stock or within short lead times. For up-to-date information about availability, contact the SKF application engineering service.

There is a wide range of applications that can benefit from SKF medium size single row four-point contact ball slewing bearings, consequently they are the most popular. SKF medium size single row four-point contact ball slewing bearings feature a unique combination of load carrying ability and speed capability and provide a cost-effective solution for light to medium-duty arrangements that do not require high precision. Typical applications include, but are not limited to, tower cranes, mobile cranes, lifting platforms and construction or material handling equipment.

Medium size single row four-point contact ball slewing bearings can be operated at circumferential speeds up to 4 m/s.

Customized single row four-point contact ball slewing bearings

SKF manufactures single row four-point contact ball slewing bearings in a variety of executions and sizes to meet the needs of particular applications.

The customized SKF single row four-point contact ball slewing bearings (→ **fig. 3**) listed in the product tables include bearings with a mean raceway diameter ranging from 179 to 1 258 mm and are available with any of the following gear configurations or options:

- an external gear (**a**)
- without a gear (**b**)
- with (**a**) or without (**b**) centring recesses

These customized bearings represent only a few designs and sizes that are manufactured on a regular basis or within short lead times. Before incorporating a customized bearing into a design, contact the SKF application engineering service for availability.

Fig. 3

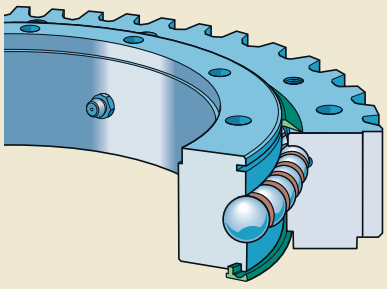

a

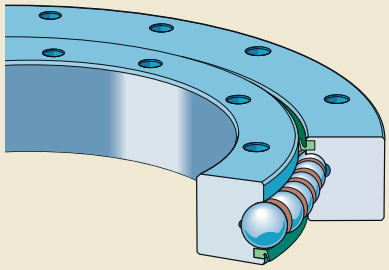

b

Table 1

Diameter tolerances

Nominal diameter over	incl.	Diameter tolerances Ungeared inner and/or outer diameter (d, D)	Centring diameters[1] Inside (d_{2c}, D_{2c})	Outside (d_{1c}, D_{1c})	Bolt hole pitch circle diameters (J_i, J_e)
mm		mm			
0	**500**	+/–2,5	0/+0,2	0/–0,2	±0,5
500	**1 000**	+/–2,5	0/+0,3	0/–0,3	±0,5
1 000	**1 500**	+/–3,5	0/+0,35	0/–0,35	±0,6
1 500	**2 000**	+/–3,5	0/+0,4	0/–0,4	±0,6
2 000	**2 500**	+/–5	0/+0,4	0/–0,4	±0,6

[1] Applies only to customized bearings

Table 2

Tolerances of tip circle and attachment bolt hole diameters

Tip circle diameters D_G and d_G Module m	Tolerances External gear	Internal gear	Bolt hole diameters K_e and K_i Nominal diameter	Tolerance
mm				
5	0/–0,25	0/+0,25	**11**	±0,3
6	0/–0,3	0/+0,3	**14**	±0,3
8	0/–0,4	0/+0,4	**16**	±0,3
10	0/–0,5	0/+0,5	**18**	±0,4
14	0/–0,7	0/+0,7	**22**	±0,4
16	0/–0,8	0/+0,8		

Fig. 4

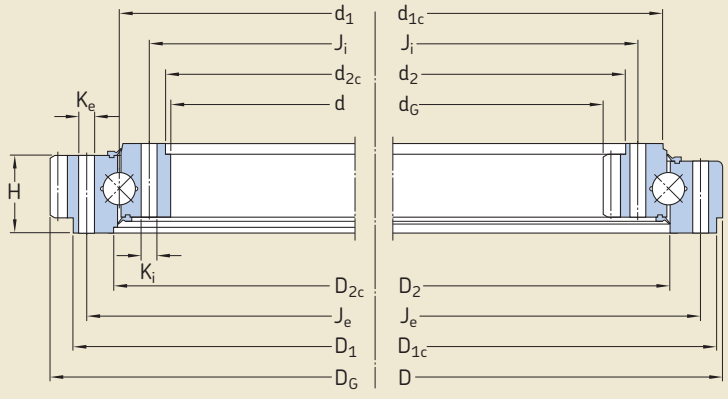

Bearing data – general

Dimensions

The boundary dimensions of single row four-point contact ball slewing bearings are dictated by practical application requirements and do not comply with any international or national standard. Light series and medium size bearings are dimensionally interchangeable with competitors' products.

Tolerances

The dimensional and running accuracy of SKF single row four-point contact ball slewing bearings are listed in

- **table 1**: Diameter tolerances (→ **fig. 4**)
- **table 2**: Tolerances of tip circle and attachment bolt hole diameters (→ **fig. 4**)
- **table 3**: Running accuracy

The tolerance for the total height H is ±1 mm for all single row four-point contact ball slewing bearings.

Axial clearance

Single row four-point contact ball slewing bearings are manufactured as standard with an internal axial clearance as listed in **table 4**, enabling them to compensate for slight imperfections in associated components, including the support surface.

Material

The rings of light series and medium size single row four-point contact ball slewing bearings up to a mean raceway diameter of 1 094 mm are made of C 45 E tempered steel, in accordance with EN 10083-2:2006. Single row four-point contact ball slewing bearings with a mean raceway diameter larger than 1 094 mm are made of 42CrMo4 bearing steel for induction-hardening, in accordance with EN 10083-3:2006.

The rings of customized single row four-point contact ball slewing bearings listed in the product tables, starting on **page 78** are made from a modified heat-treatable 42 C 2 steel, in accordance with NFA 35-557:1983, or 46Cr2 steel, in accordance with EN 10083-3-2006.

The inner and outer ring raceways are induction hardened, leaving the remainder of the rings, including the gears, unaffected by the hardening process.

The balls are made of 100Cr6 bearing steel for through-hardening, in accordance with EN ISO 683-17:2000.

Corrosion protection

Single row four-point contact ball slewing bearings are protected, as standard, by a solvent-free rust inhibitor.

Table 3

Running accuracy

Nominal mean raceway diameter d_m		**Running accuracy** Light series bearings Medium size bearings		Customized bearings	
		Radial runout[1]	Axial runout[2]	Radial runout[1]	Axial runout[2]
over	incl.	max	max	max	max
mm		mm			
0	**500**	0,2	0,3	0,2	0,2
500	**1 000**	0,3	0,4	0,3	0,2
1 000	**1 500**	0,35	0,5	0,35	0,2
1 500	**2 000**	0,45	0,6	0,4	0,25
2 000	**2 500**	0,5	0,7	0,45	0,25

[1] Radial runout of the centre of the inner or outer ring of an assembled bearing
[2] Axial runout of the mating surface of the inner or outer ring of an assembled bearing

Table 4

Axial clearance

Nominal mean raceway diameter	**Measuring load**	**Axial clearance**[1] Light series bearings	Medium size bearings	Customized bearings
		max	max	max
mm	N	mm		
179, 257, 402	200	–	–	0,185
411, 414	200	0,3	0,28	0,185
541, 544	200	0,3	0,3	0,185
641, 644	250	0,35	0,3	0,185
741, 744	250	0,35	0,3	0,185
841, 844	300	0,4	0,3	0,185
941, 944, 980	300	0,45	0,3	0,185
1 091, 1 094	350	0,5	0,3	0,185
1 204, 1 258	350	–	0,3	0,185
1 314	400	–	0,3	0,185
1 424	400	–	0,3	0,185
1 534	400	–	0,3	0,185
1 644	500	–	0,3	0,22
1 754	500	–	0,3	0,22
1 904	500	–	0,3	0,22

[1] Arithmetical mean of three measurements

Fig. 5

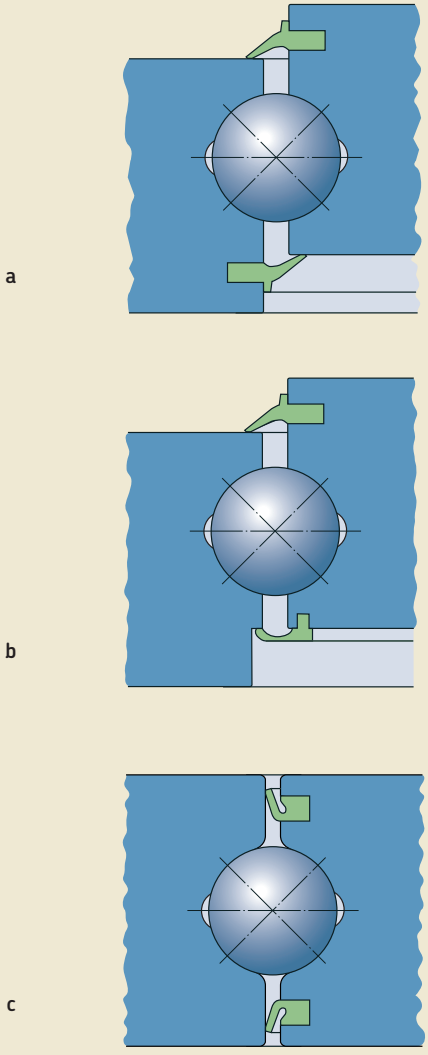

Gears

The gear teeth are manufactured to an SKF specification that closely follows accuracy grade 12 in accordance with ISO 1328-2:1997 and are not hardened. Guideline values for the permissible tooth forces can be obtained from the product tables.

The gear of a new bearing is coated with a preservative. After mounting has been completed, lubricant needs to be applied to the gear. This lubricant should have good adhesive properties and a high resistance to water washout. Additionally, the lubricant must be able to withstand temperatures of +100 °C and has to have a base oil viscosity of at least 500 mm^2/s at +40 °C.

Seals

The integral seals are made of profiled strips of non-reinforced acrylonitrile-butadiene rubber (NBR). They seal axially against the side face of the inner or outer ring (→ **fig. 5a, b**) or radially against the cylindrical surface of the inner or outer ring (→ **fig. 5c**). This material has very good engineering properties and shows good resistance to most mineral oils and greases. The permissible operating temperatures of the seal material range from –40 to +110 °C.

Lubrication

Standard SKF single row four-point contact ball slewing bearings are filled with a mineral oil based grease with a consistency of 2 on the NLGI scale using a lithium soap thickener and containing extreme pressure additives. The base oil viscosity is 200 mm^2/s at 40 °C and 16 mm^2/s at 100 °C. This grease has good rust inhibiting properties and a temperature range of –20 up to +110 °C. Reliable lubrication according to the SKF traffic light concept occurs when operating temperatures range from +30 to +110°C.

Light series and medium size single row four-point contact ball slewing bearings can be relubricated through four equally spaced grease fittings to DIN 71412:1987:

- in the inner ring of bearings with an external gear (→ **fig. 6a**)
- in the outer ring of bearings with an internal gear (→ **fig. 6b**)
- in the outer ring of bearings without a gear

Relubrication features of customized slewing bearings (→ **fig. 6c**) depend on the needs of the application. For additional information, contact the SKF application engineering service.

Guidelines to determine relubrication intervals for slewing bearings in vertical arrangements under normal and clean conditions are provided in the chapter “Lubrication”, starting on **page 28**.

Fig. 6

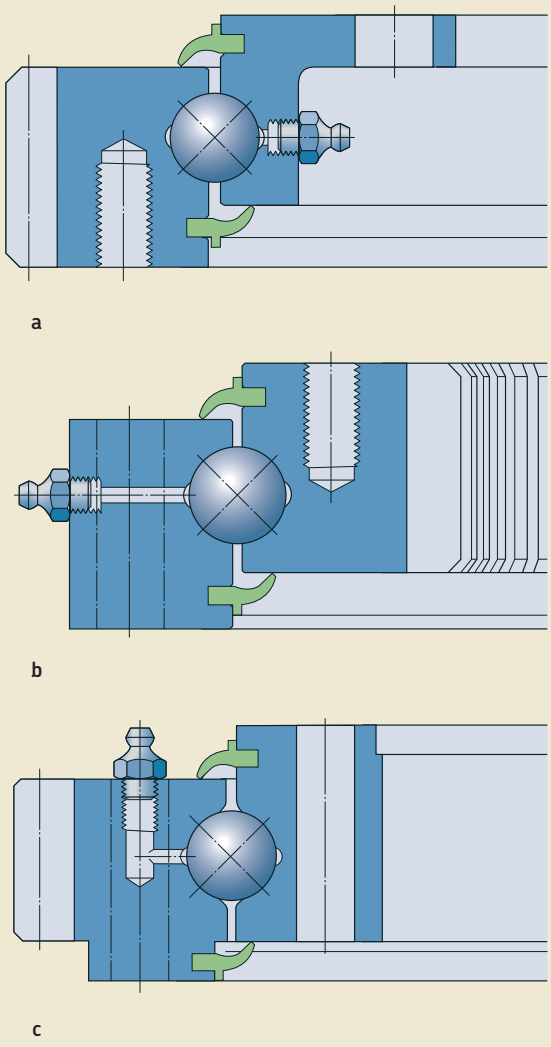

a

b

c

Designation systems

The designation system for SKF light series and medium size single row four-point contact ball slewing bearings is described in **table 5**.

The designation system for SKF customized slewing bearings is described in **table 6**.

Table 5

Designation system of SKF light series and medium size single row four-point contact ball slewing bearings

Examples:
RKS.21 0411
RKS.23 0941
RKS.062.20.0414
RKS.060.30.1904

RKS.	2	1		0411
RKS.	2	3		0941
RKS.	06	2.	20.	0414
RKS.	06	0.	30.	1904

Bearing identification

RKS SKF slewing bearing

Series identification

2 Light series single row four-point contact ball slewing bearing
06 Medium size single row four-point contact ball slewing bearing

Identification of gear position

0 Without a gear (medium size bearings)
1 With an external gear
2 With an internal gear
3 Without a gear (light series bearings)

Ball size identification

20 20 mm ball diameter
25 25 mm ball diameter
30 30 mm ball diameter

Identification of bearing size

0411 411 mm mean raceway diameter
to
1904 1 904 mm mean raceway diameter

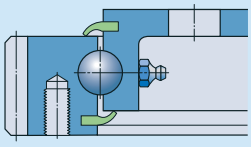

21 light series,
with an external gear

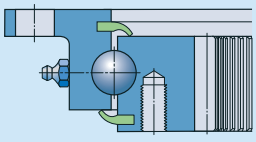

22 light series,
with an internal gear

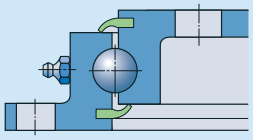

23 light series,
without a gear

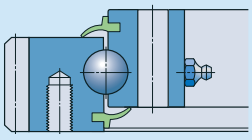

061 medium size,
with an external gear

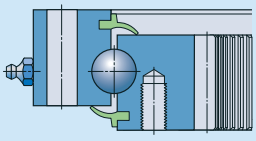

062 medium size,
with an internal gear

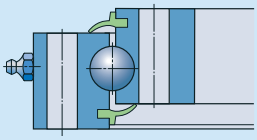

060 medium size,
without a gear

Table 6

Designation system of customized SKF slewing bearings

Examples: **RKS.20404 0101001**
RKS.90015 5101001

RKS.	2	0	4	04	01	01	001
RKS.	9	0	0	15	51	01	001

Bearing identification

RKS SKF slewing bearing

Bearing size identification

1 Outside diameter from > 500 to ≤ 820 mm
2 Outside diameter from > 820 to ≤ 1 200 mm
3 Outside diameter from >1 200 to ≤ 1 475 mm
4 Outside diameter from >1 475 to ≤ 2 000 mm
5 Outside diameter from > 2 000 to ≤ 2 500 mm
9 Outside diameter ≤ 500 mm

Identification of bearing type

0 Ball bearing with an external gear
1 Crossed cylindrical roller bearing with an internal gear
2 Crossed cylindrical roller bearing with an external gear
5 Ball bearing with an internal gear

Rolling element size identification

0 Rolling element diameter < 20 mm or ≥ 71 mm
1 20 mm rolling element diameter
2 25 mm rolling element diameter
3 30 mm rolling element diameter
4 36 mm rolling element diameter
5 40 mm rolling element diameter

Variants

Numbering system for coding variants like gear, heat treatment, cage, clearance, mounting, etc. Contact SKF for details.

Light series four-point contact ball slewing bearings with an external gear
d_m **411 – 1 091** mm

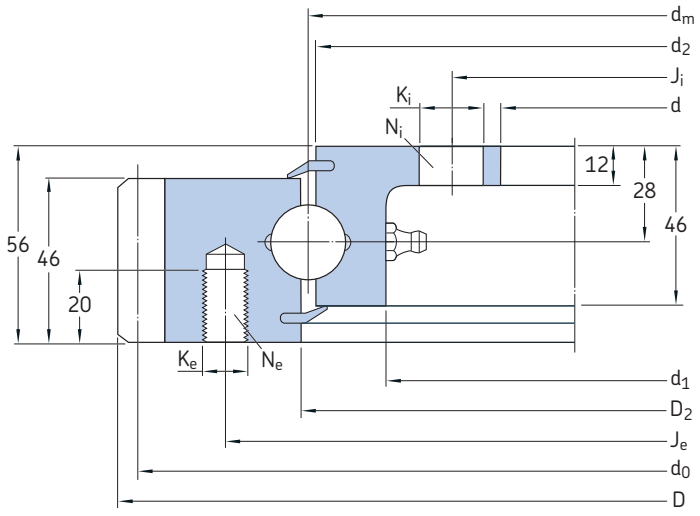

Dimensions						Attachment bolt holes Outer ring			Inner ring			Mass	Designation
d_m	D	D_2	d	d_1	d_2	J_e	K_e	N_e	J_i	K_i	N_i		
mm						mm		–	mm		–	kg	–
411	505	412,5	304	368	409,5	455	M 12	10	332	18	12	32,0	**RKS.21 0411**
541	640	542,5	434	498	539,5	585	M 12	14	462	18	14	44,0	**RKS.21 0541**
641	742	642,5	534	598	639,5	685	M 12	16	562	18	16	52,0	**RKS.21 0641**
741	840	742,5	634	698	739,5	785	M 12	18	662	18	16	60,0	**RKS.21 0741**
841	950	842,5	734	798	839,5	885	M 12	18	762	18	18	68,0	**RKS.21 0841**
941	1 046	942,5	834	898	939,5	985	M 12	20	862	18	20	76,0	**RKS.21 0941**
1 091	1 198	1 092,5	984	1 048	1 089,5	1 135	M 12	22	1 012	18	20	86,0	**RKS.21 1091**

Relubrication can be done through 4 equally spaced grease fittings AM 8×1 to DIN 71412 in the inner ring.

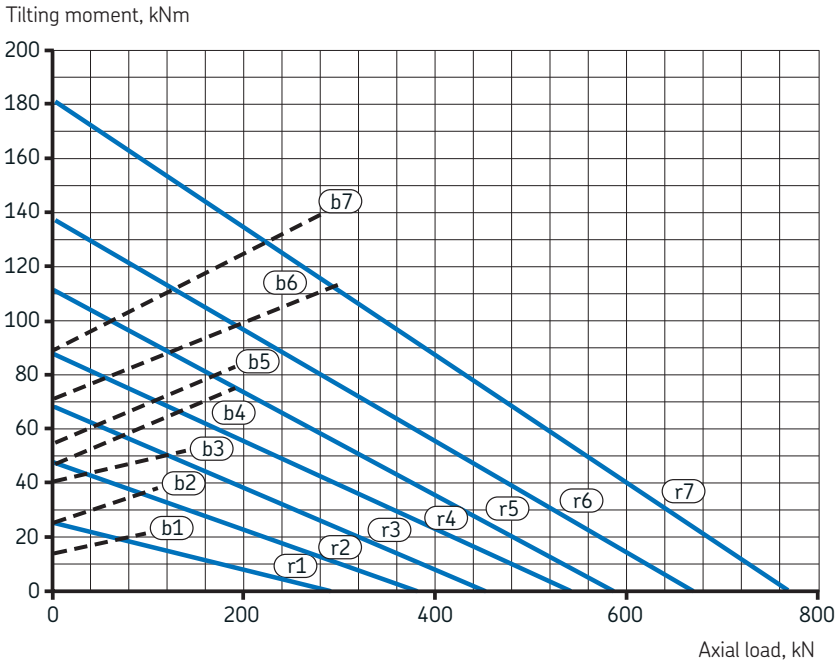

Designation	Gear Dimensions			Permissible tooth forces		Basic load ratings axial		Static limiting load diagram	
	d_0 [1]	m	z	$T_{fnormal}$ [2]	T_{fmax}	dynamic C	static C_0	Raceway curves	Bolt curves
–	mm		–	kN		kN		–	
RKS.21 0411	495	5	99	12	46	169	284	r1	b1
RKS.21 0541	630	6	105	16	54	188	380	r2	b2
RKS.21 0641	732	6	122	16	54	200	440	r3	b3
RKS.21 0741	828	6	138	16	54	211	524	r4	b4
RKS.21 0841	936	8	117	21	72	222	580	r5	b5
RKS.21 0941	1 032	8	129	21	72	231	664	r6	b6
RKS.21 1091	1 184	8	148	21	72	244	766	r7	b7

[1] Gear pitch circle diameter
[2] Normalized gear teeth; calculated for 3 000 000 operating cycles

Light series four-point contact ball slewing bearings with an internal gear
d_m **411 – 1 091** mm

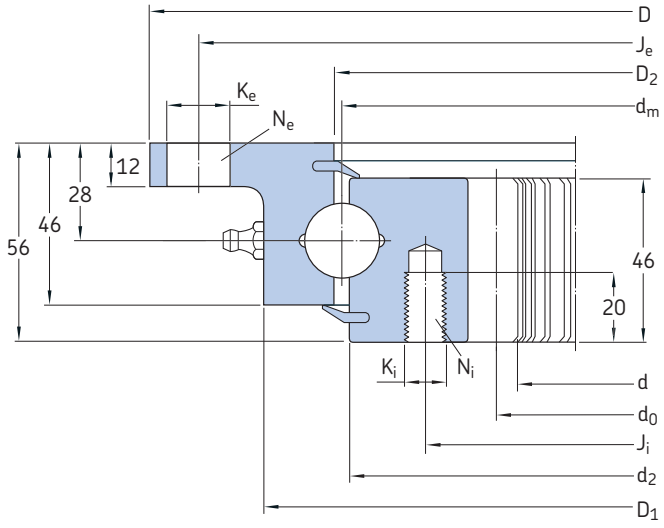

Dimensions						Attachment bolt holes Outer ring			Inner ring			Mass	Designation
d_m	D	D_1	D_2	d	d_2	J_e	K_e	N_e	J_i	K_i	N_i		
mm						mm		–	mm		–	kg	–
411	518	454	412,5	325	409,5	490	18	8	375	M 12	12	31,0	**RKS.22 0411**
541	648	584	542,5	445	539,5	620	18	10	505	M 12	16	41,0	**RKS.22 0541**
641	748	684	642,5	546	639,5	720	18	12	605	M 12	18	48,0	**RKS.22 0641**
741	848	784	742,5	649	739,5	820	18	12	705	M 12	20	55,0	**RKS.22 0741**
841	948	884	842,5	736	839,5	920	18	14	805	M 12	20	63,0	**RKS.22 0841**
941	1 048	984	942,5	840	939,5	1 020	18	16	905	M 12	22	71,0	**RKS.22 0941**
1 091	1 198	1 134	1 092,5	986	1 089,5	1 170	18	16	1 055	M 12	24	80,0	**RKS.22 1091**

Relubrication can be done through 4 equally spaced grease fittings AM 8×1 to DIN 71412 in the outer ring.

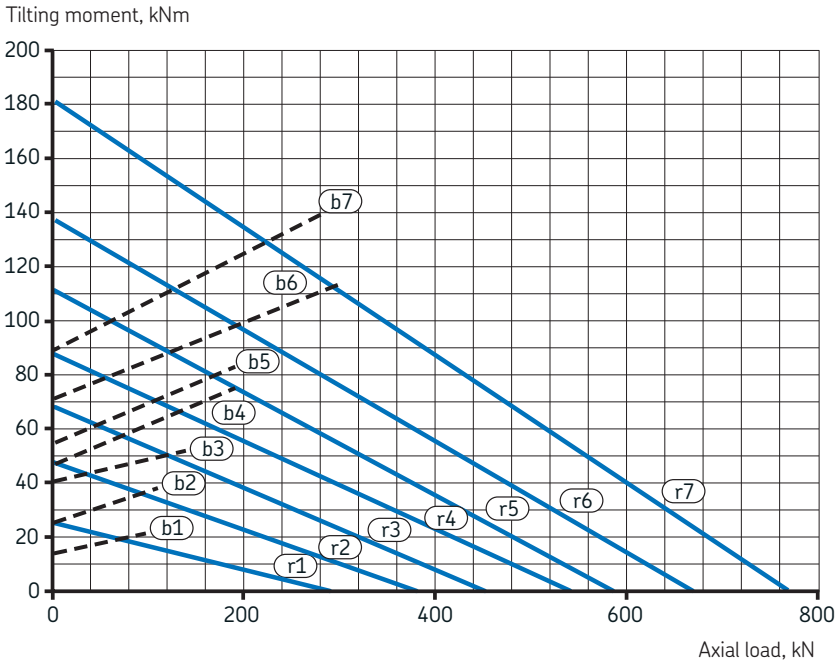

Designation	Gear Dimensions			Permissible tooth forces		Basic load ratings axial		Static limiting load diagram	
	d_0 [1]	m	z	$T_{fnormal}$ [2]	T_{fmax}	dynamic C	static C_0	Raceway curves	Bolt curves
–	mm		–	kN		kN		–	
RKS.22 0411	335	5	67	12	49	169	284	r1	b1
RKS.22 0541	456	6	76	16	65	188	380	r2	b2
RKS.22 0641	558	6	93	16	65	200	440	r3	b3
RKS.22 0741	660	6	110	16	65	211	524	r4	b4
RKS.22 0841	752	8	94	21	87	222	580	r5	b5
RKS.22 0941	856	8	107	21	87	231	664	r6	b6
RKS.22 1091	1 000	8	125	21	87	244	766	r7	b7

[1] Gear pitch circle diameter
[2] Normalized gear teeth; calculated for 3 000 000 operating cycles

Light series four-point contact ball slewing bearings without a gear
d_m **411 – 1 091** mm

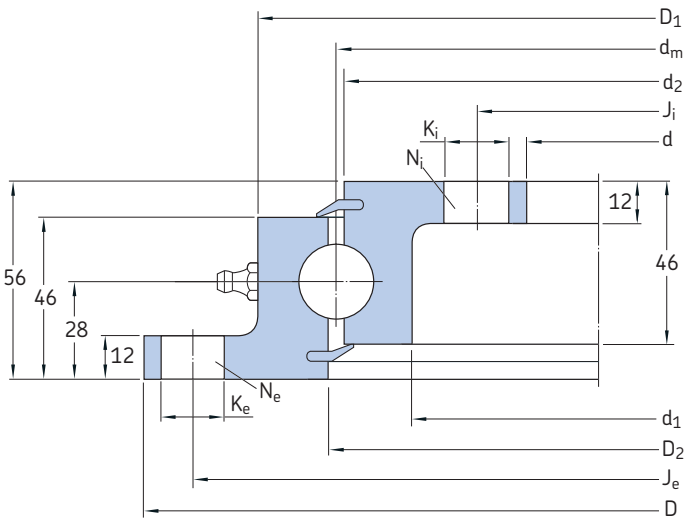

Dimensions							Attachment bolt holes Outer ring			Inner ring			Mass	Designation
d_m	D	D_1	D_2	d	d_1	d_2	J_e	K_e	N_e	J_i	K_i	N_i		
mm							mm		–	mm		–	kg	–
411	518	454	412,5	304	368	409,5	490	18	8	332	18	12	23,5	**RKS.23 0411**
541	648	584	542,5	434	498	539,5	620	18	10	462	18	14	31,0	**RKS.23 0541**
641	748	684	642,5	534	598	639,5	720	18	12	562	18	16	36,5	**RKS.23 0641**
741	848	784	742,5	634	698	739,5	820	18	12	662	18	16	43,0	**RKS.23 0741**
841	948	884	842,5	734	798	839,5	920	18	14	762	18	18	48,0	**RKS.23 0841**
941	1 048	984	942,5	834	898	939,5	1 020	18	16	862	18	20	54,0	**RKS.23 0941**
1 091	1 198	1 134	1 092,5	984	1 048	1 089,5	1 170	18	16	1 012	18	20	62,0	**RKS.23 1091**

Relubrication can be done through 4 equally spaced grease fittings AM 8×1 to DIN 71412 in the outer ring.

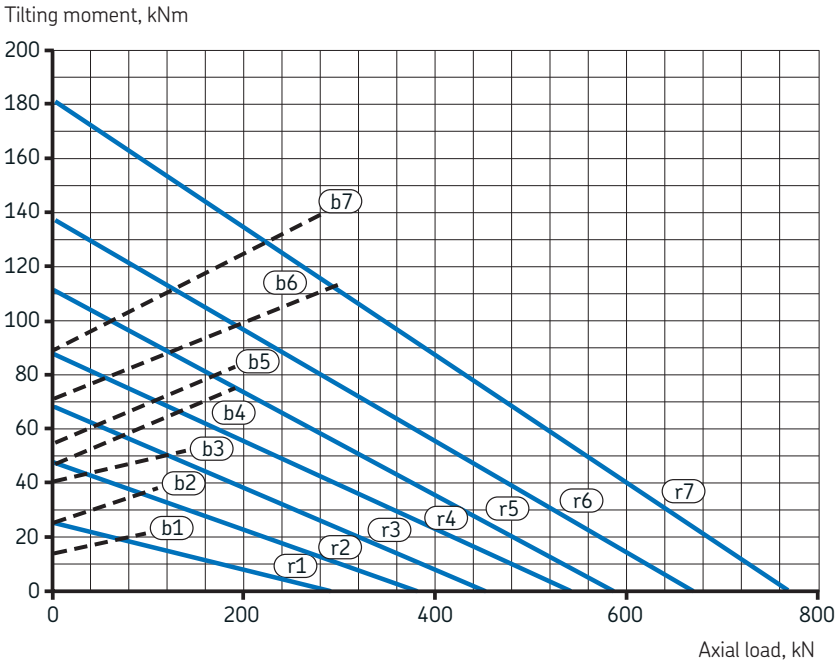

Designation	Basic load ratings axial dynamic C	static C_0	Static limiting load diagram Raceway curves	Bolt curves
–	kN		–	
RKS.23 0411	169	284	r1	b1
RKS.23 0541	188	380	r2	b2
RKS.23 0641	200	440	r3	b3
RKS.23 0741	211	524	r4	b4
RKS.23 0841	222	580	r5	b5
RKS.23 0941	231	664	r6	b6
RKS.23 1091	244	766	r7	b7

Medium size four-point contact ball slewing bearings with an external gear
d_m **414 – 1 094** mm

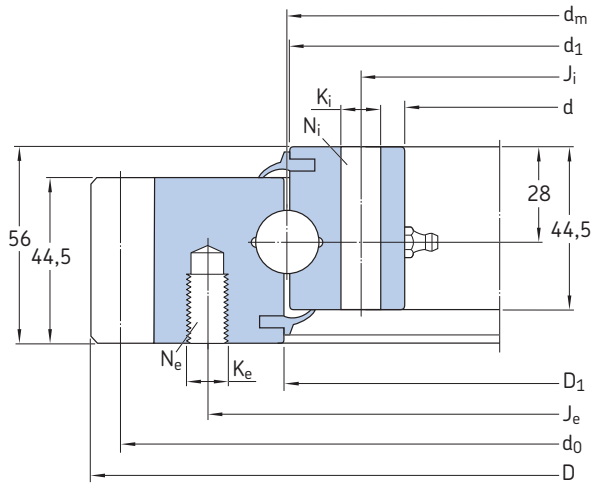

Dimensions					Attachment bolt holes Outer ring			Inner ring			Mass	Designation
d_m	D	D_1	d	d_1	J_e	K_e	N_e	J_i	K_i	N_i		
mm					mm		–	mm		–	kg	–
414	504	415,5	342	412,5	455	M 12	20	368	13,5	24	31,0	**RKS.061.20.0414**
544	640,8	545,5	472	542,5	585	M 12	28	498	13,5	32	43,0	**RKS.061.20.0544**
644	742,8	645,5	572	642,5	685	M 12	32	598	13,5	36	52,0	**RKS.061.20.0644**
744	838,8	745,5	672	742,5	785	M 12	36	698	13,5	40	59,0	**RKS.061.20.0744**
844	950,4	845,5	772	842,5	885	M 12	36	798	13,5	40	71,0	**RKS.061.20.0844**
944	1 046,4	945,5	872	942,5	985	M 12	40	898	13,5	44	77,0	**RKS.061.20.0944**
1 094	1 198,4	1 095,5	1 022	1 092,5	1 135	M 12	44	1 048	13,5	48	91,0	**RKS.061.20.1094**

Relubrication can be done through 4 equally spaced grease fittings A M10×1 to DIN 71412 in the inner ring.

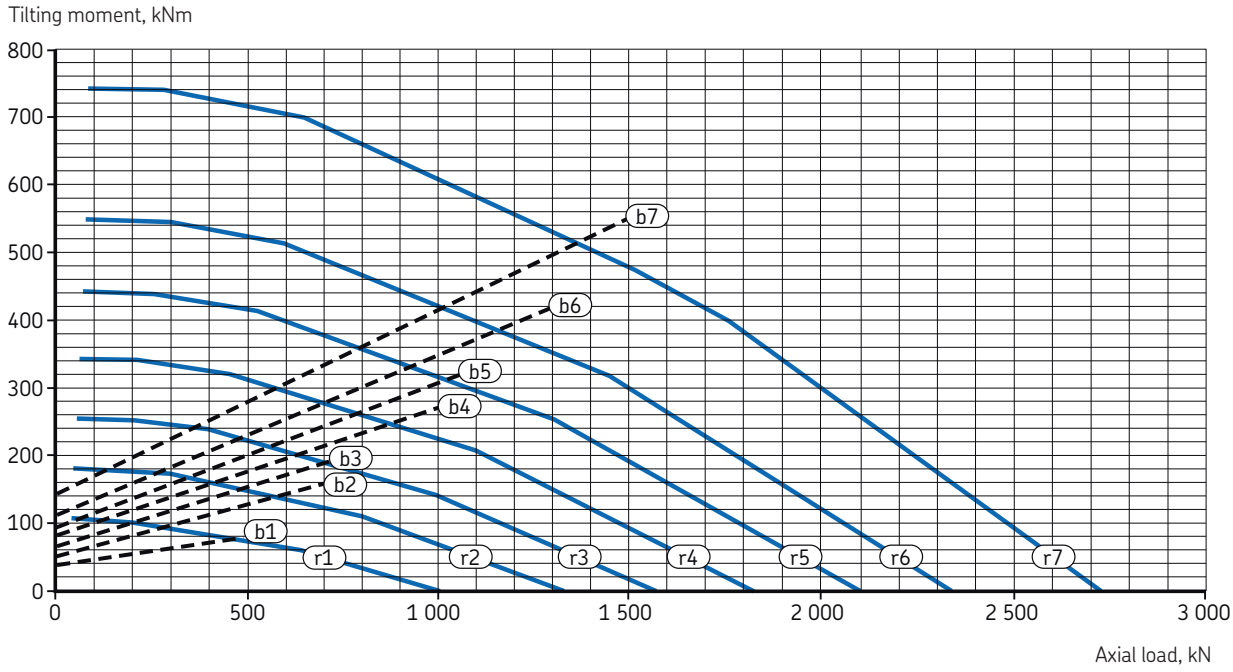

Designation	Gear Dimensions				Permissible tooth forces		Basic load ratings axial		Static limiting load diagram	
	d_0[1]	m	z	k·m	$T_{fnormal}$[2]	T_{fmax}	dynamic C	static C_0	Raceway curves	Bolt curves
–	mm		–	mm	kN		kN		–	
RKS.061.20.0414	495	5	99	–0,5	12	46	209	1 010	r1	b1
RKS.061.20.0544	630	6	105	–0,6	16	54	233	1 350	r2	b2
RKS.061.20.0644	732	6	122	–0,6	16	54	248	1 580	r3	b3
RKS.061.20.0744	828	6	138	–0,6	16	54	262	1 840	r4	b4
RKS.061.20.0844	936	8	117	–0,8	21	72	276	2 100	r5	b5
RKS.061.20.0944	1 032	8	129	–0,8	21	72	286	2 340	r6	b6
RKS.061.20.1094	1 184	8	148	–0,8	21	72	303	2 710	r7	b7

[1] Gear pitch circle diameter
[2] Normalized gear teeth; calculated for 3 000 000 operating cycles

Medium size four-point contact ball slewing bearings with an external gear
d_m **1 204 – 1 904** mm

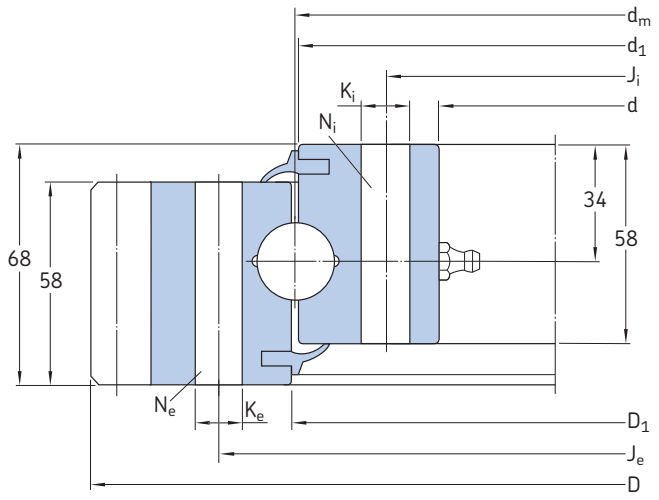

Dimensions					Attachment bolt holes Outer ring			Inner ring			Mass	Designation
d_m	D	D_1	d	d_1	J_e	K_e	N_e	J_i	K_i	N_i		
mm					mm		–	mm		–	kg	–
1 204	1 338	1 207,5	1 119	1 200,5	1 257	16	45	1 151	16	45	154	**RKS.061.25.1204**
1 314	1 448	1 317,5	1 229	1 310,5	1 367	16	50	1 261	16	50	166	**RKS.061.25.1314**
1 424	1 558	1 427,5	1 339	1 420,5	1 477	16	54	1 371	16	54	180	**RKS.061.25.1424**
1 534	1 668	1 537,5	1 449	1 530,5	1 587	16	60	1 481	16	60	193	**RKS.061.25.1534**
1 644	1 791	1 647,5	1 536	1 640,5	1 708	22	54	1 580	22	54	237	**RKS.061.25.1644**
1 754	1 901	1 757,5	1 646	1 750,5	1 818	22	60	1 690	22	60	257	**RKS.061.25.1754**
1 904	2 073,4	1 907,5	1 796	1 900,5	1 968	22	64	1 840	22	64	300	**RKS.061.30.1904**

Relubrication can be done through 4 equally spaced grease fittings A M10×1 to DIN 71412 in the inner ring.

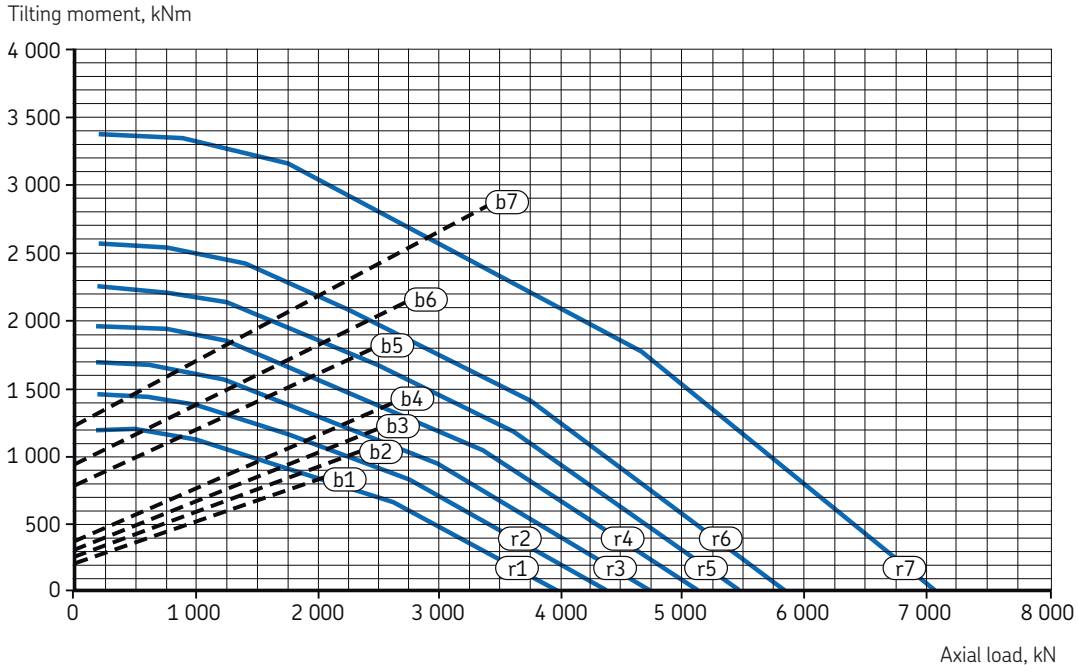

Designation	Toothing Dimensions					Permissible tooth forces		Basic load ratings axial		Static limiting load diagram	
	d_0[1]	m	z	x·m	k·m	$T_{fnormal}$[2]	T_{fmax}	dynamic C	static C_0	Raceway curves	Bolt curves
–	mm		–	mm		kN		kN		–	
RKS.061.25.1204	1 310	10	131	+5	–1	45	130	508	3 990	r1	b1
RKS.061.25.1314	1 420	10	142	+5	–1	45	130	526	4 380	r2	b2
RKS.061.25.1424	1 530	10	153	+5	–1	45	130	541	4 730	r3	b3
RKS.061.25.1534	1 640	10	164	+5	–1	45	130	557	5 110	r4	b4
RKS.061.25.1644	1 760	10	176	+6,5	–1	45	130	570	5 460	r5	b5
RKS.061.25.1754	1 870	10	187	+6,5	–1	45	130	585	5 840	r6	b6
RKS.061.30.1904	2 030	14	145	+9,1	–1,4	62	181	690	7 070	r7	b7

[1] Gear pitch circle diameter
[2] Normalized gear teeth; calculated for 3 000 000 operating cycles

Medium size four-point contact ball slewing bearings with an internal gear
d_m **414 – 1 094** mm

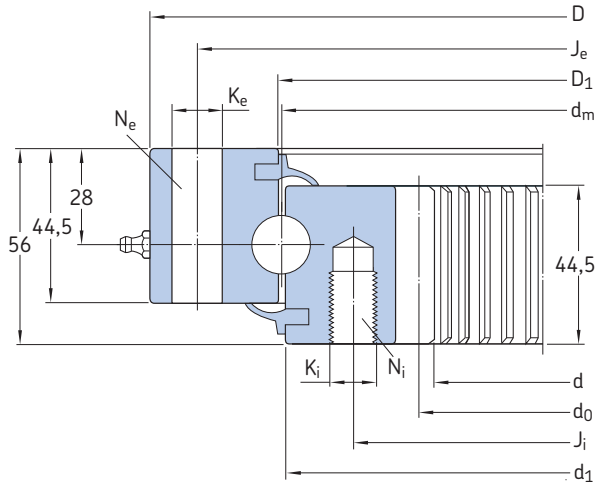

Dimensions					Attachment bolt holes Outer ring			Inner ring			Mass	Designation
d_m	D	D_1	d	d_1	J_e	K_e	N_e	J_i	K_i	N_i		
mm					mm		–	mm		–	kg	–
414	486	415,5	326,5	412,5	460	13,5	24	375	M 12	24	31,0	**RKS.062.20.0414**
544	616	545,5	445,2	542,5	590	13,5	32	505	M 12	32	42,0	**RKS.062.20.0544**
644	716	645,5	547,2	642,5	690	13,5	36	605	M 12	36	50,0	**RKS.062.20.0644**
744	816	745,5	649,2	742,5	790	13,5	40	705	M 12	40	58,0	**RKS.062.20.0744**
844	916	845,5	737,6	842,5	890	13,5	40	805	M 12	40	69,0	**RKS.062.20.0844**
944	1016	945,5	841,6	942,5	990	13,5	44	905	M 12	44	76,0	**RKS.062.20.0944**
1 094	1 166	1 095,5	985,6	1 092,5	1 140	13,5	48	1 055	M 12	48	91,0	**RKS.062.20.1094**

Relubrication can be done through 4 equally spaced grease fittings A M10×1 to DIN 71412 in the outer ring.

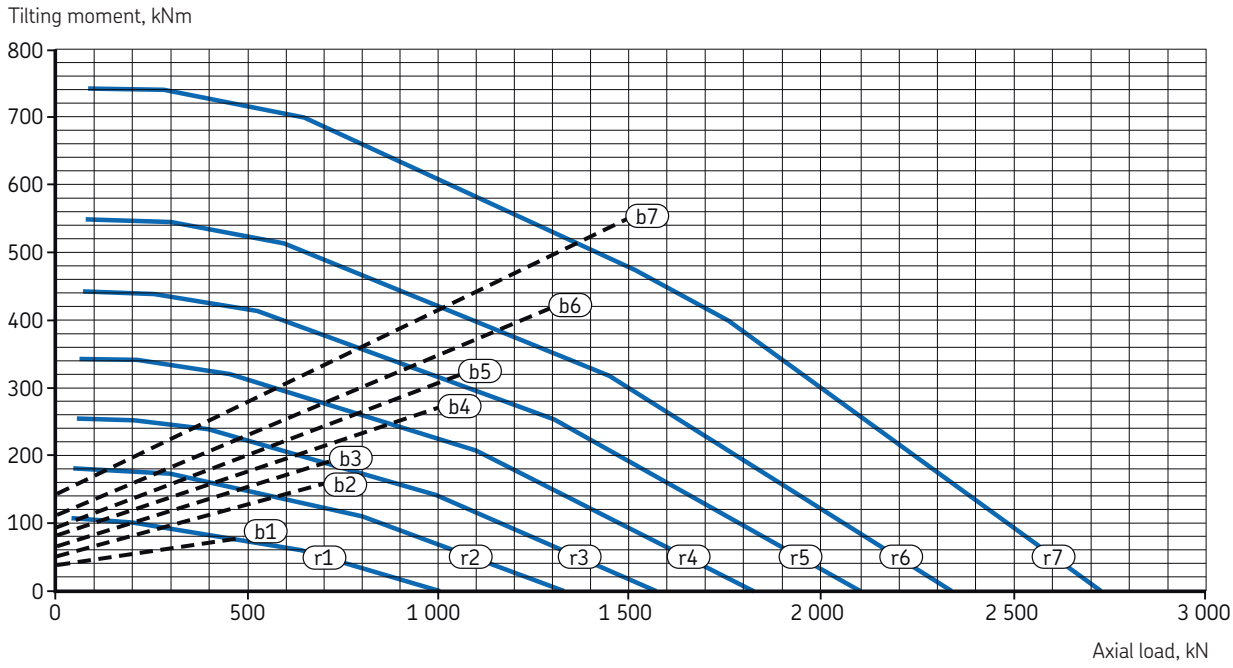

Designation	Gear Dimensions				Permissible tooth forces		Basic load ratings axial		Static limiting load diagram	
	d_0[1]	m	z	k·m	$T_{fnormal}$[2]	T_{fmax}	dynamic C	static C_0	Raceway curves	Bolt curves
–	mm		–	mm	kN		kN		–	
RKS.062.20.0414	335	5	67	–0,75	12	49	209	1 010	r1	b1
RKS.062.20.0544	456	6	76	–0,6	16	65	233	1 350	r2	b2
RKS.062.20.0644	558	6	93	–0,6	16	65	248	1 580	r3	b3
RKS.062.20.0744	660	6	110	–0,6	16	65	262	1 840	r4	b4
RKS.062.20.0844	752	8	94	–0,8	21	87	276	2 100	r5	b5
RKS.062.20.0944	856	8	107	–0,8	21	87	286	2 340	r6	b6
RKS.062.20.1094	1 000	8	125	–0,8	21	87	303	2 710	r7	b7

[1] Gear pitch circle diameter
[2] Normalized gear teeth; calculated for 3 000 000 operating cycles

Medium size four-point contact ball slewing bearings with an internal gear
d_m **1 204 – 1 904** mm

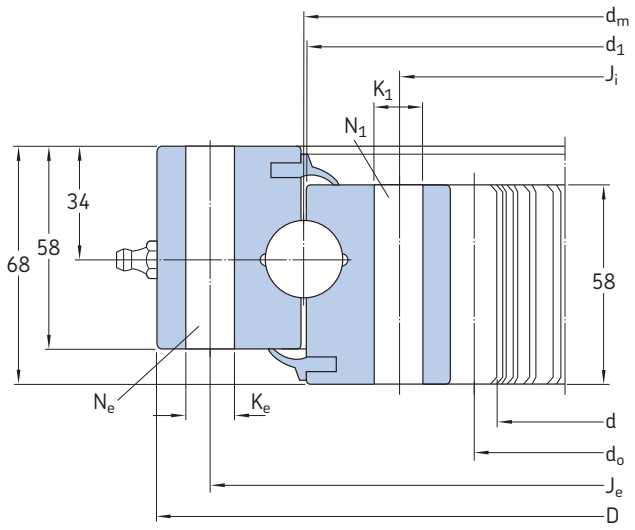

Dimensions					Attachment bolt holes Outer ring			Inner ring			Mass	Designation
d_m	D	D_1	d	d_1	J_e	K_e	N_e	J_i	K_i	N_i		
mm					mm		–	mm		–	kg	–
1 204	1 289	1 207,5	1 072	1 200,5	1 257	16	45	1 151	16	45	145	**RKS.062.25.1204**
1 314	1 399	1 317,5	1 182	1 310,5	1 367	16	50	1 261	16	50	160	**RKS.062.25.1314**
1 424	1 509	1 427,5	1 292	1 420,5	1 477	16	54	1 371	16	54	172	**RKS.062.25.1424**
1 534	1 619	1 537,5	1 402	1 530,5	1 587	16	60	1 481	16	60	185	**RKS.062.25.1534**
1 644	1 752	1 647,5	1 495	1 640,5	1 708	22	54	1 580	22	54	235	**RKS.062.25.1644**
1 754	1 862	1 757,5	1 605	1 750,5	1 818	22	60	1 690	22	60	252	**RKS.062.25.1754**
1 904	2 012	1 907,5	1 729	1 900,5	1 968	22	64	1 840	22	64	300	**RKS.062.30.1904**

Relubrication can be done through 4 equally spaced grease fittings A M10×1 to DIN 71412 in the outer ring.

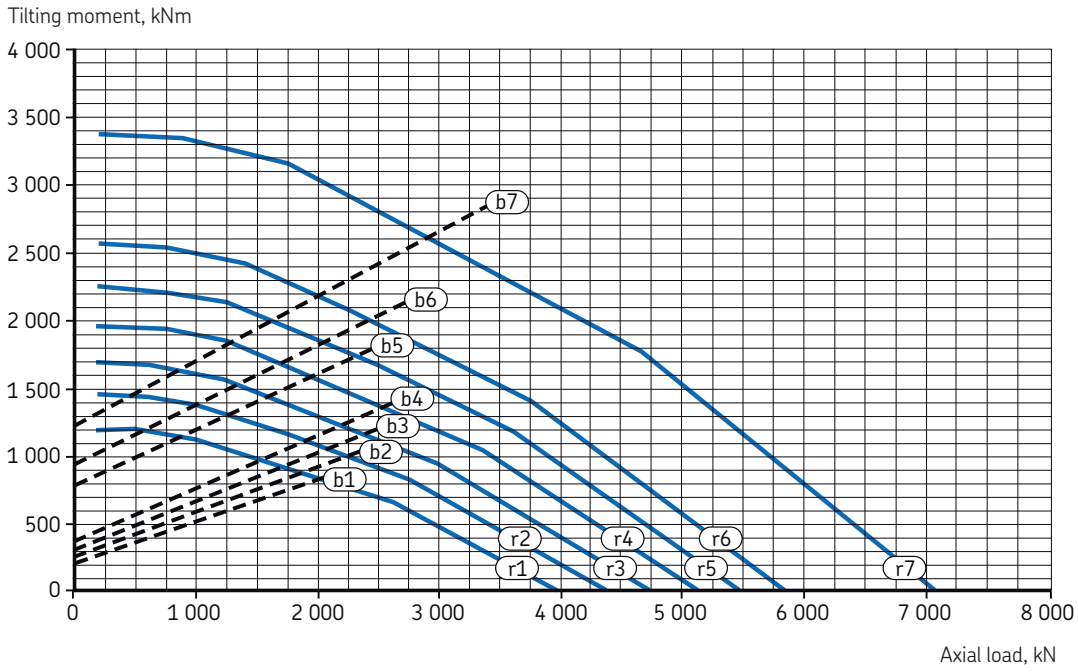

Designation	Gear Dimensions					Permissible tooth forces		Basic load ratings axial		Static limiting load diagram	
	d_0 [1]	m	z	x·m	k·m	$T_{fnormal}$ [2]	T_{fmax}	dynamic C	static C_0	Raceway curves	Bolt curves
–	mm		–	mm		kN		kN		–	
RKS.062.25.1204	1 080	10	108	+5	–1	48	169	508	3 990	r1	b1
RKS.062.25.1314	1 190	10	119	+5	–1	48	169	526	4 380	r2	b2
RKS.062.25.1424	1 300	10	130	+5	–1	48	169	541	4 730	r3	b3
RKS.062.25.1534	1 410	10	141	+5	–1	48	169	557	5 110	r4	b4
RKS.062.25.1644	1 500	10	150	+6,5	–1	48	169	570	5 460	r5	b5
RKS.062.25.1754	1 610	10	161	+6,5	–1	48	169	585	5 840	r6	b6
RKS.062.30.1904	1 736	14	124	+9,1	–1,4	69	230	690	7 070	r7	b7

[1] Gear pitch circle diameter
[2] Normalized gear teeth; calculated for 3 000 000 operating cycles

Medium size four-point contact ball slewing bearings without a gear

d_m **414 – 1 094** mm

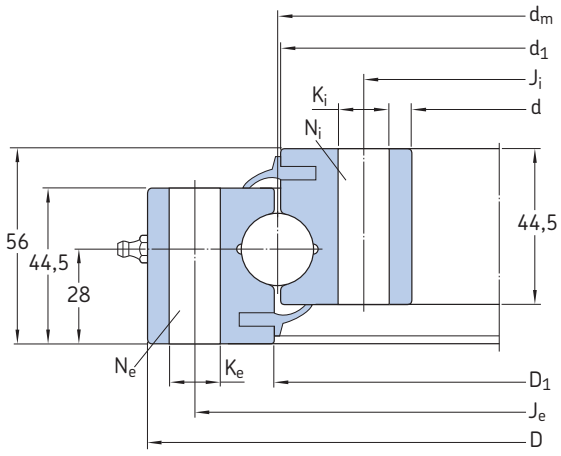

Dimensions					Attachment bolt holes Outer ring			Inner ring			Mass	Designation
d_m	D	D_1	d	d_1	J_e	K_e	N_e	J_i	K_i	N_i		
mm					mm		–	mm		–	kg	–
414	486	415,5	342	412,5	460	13,5	24	368	13,5	24	29,0	**RKS.060.20.0414**
544	616	545,5	472	542,5	590	13,5	32	498	13,5	32	37,0	**RKS.060.20.0544**
644	716	645,5	572	642,5	690	13,5	36	598	13,5	36	44,0	**RKS.060.20.0644**
744	816	745,5	672	742,5	790	13,5	40	698	13,5	40	52,0	**RKS.060.20.0744**
844	916	845,5	772	842,5	890	13,5	40	798	13,5	40	60,0	**RKS.060.20.0844**
944	1016	945,5	872	942,5	990	13,5	44	898	13,5	44	67,0	**RKS.060.20.0944**
1 094	1 166	1 095,5	1 022	1 092,5	1 140	13,5	48	1 048	13,5	48	77,0	**RKS.060.20.1094**

Relubrication can be done through 4 equally spaced grease fittings A M10×1 to DIN 71412 in the outer ring.

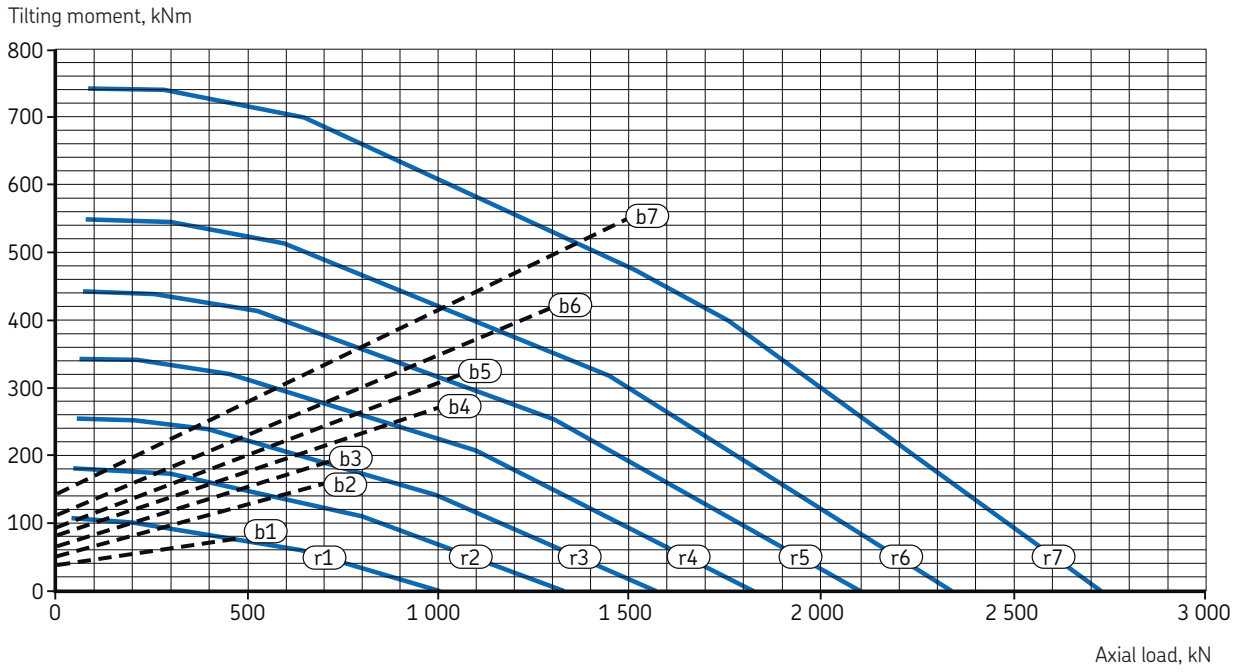

Designation	Basic load ratings axial dynamic C	static C_0	Static limiting load diagram Raceway curves	Bolt curves
–	kN		–	
RKS.060.20.0414	209	1 010	r1	b1
RKS.060.20.0544	233	1 350	r2	b2
RKS.060.20.0644	248	1 580	r3	b3
RKS.060.20.0744	262	1 840	r4	b4
RKS.060.20.0844	276	2 100	r5	b5
RKS.060.20.0944	286	2 340	r6	b6
RKS.060.20.1094	303	2 710	r7	b7

Medium size four-point contact ball slewing bearings without a gear
d_m **1 204 – 1 904** mm

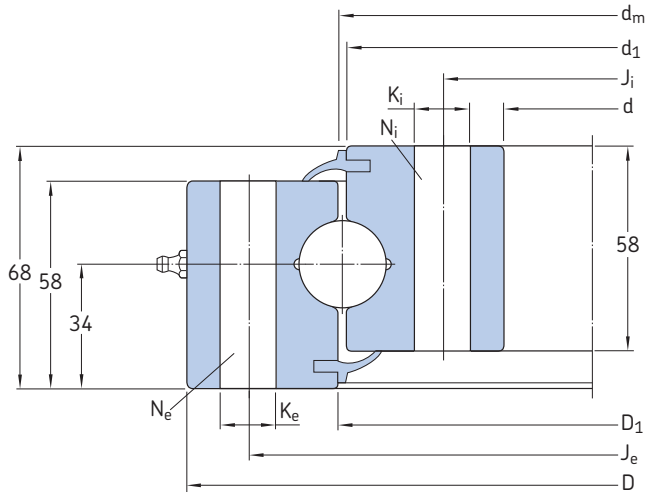

Dimensions					Attachment bolt holes Outer ring			Inner ring			Mass	Designation
d_m	D	D_1	d	d_1	J_e	K_e	N_e	J_i	K_i	N_i		
mm					mm		–	mm		–	kg	–
1 204	1 289	1 207,5	1 119	1 200,5	1 257	16	45	1 151	16	45	120	**RKS.060.25.1204**
1 314	1 399	1 317,5	1 229	1 310,5	1 367	16	50	1 261	16	50	132	**RKS.060.25.1314**
1 424	1 509	1 427,5	1 339	1 420,5	1 477	16	54	1 371	16	54	155	**RKS.060.25.1424**
1 534	1 619	1 537,5	1 449	1 530,5	1 587	16	60	1 481	16	60	155	**RKS.060.25.1534**
1 644	1 752	1 647,5	1 536	1 640,5	1 708	22	54	1 580	22	54	210	**RKS.060.25.1644**
1 754	1 862	1 757,5	1 646	1 750,5	1 818	22	60	1 690	22	60	222	**RKS.060.25.1754**
1 904	2 012	1 907,5	1 796	1 900,5	1 968	22	64	1 840	22	64	240	**RKS.060.30.1904**

Relubrication can be done through 4 equally spaced grease fittings A M10×1 to DIN 71412 in the outer ring.

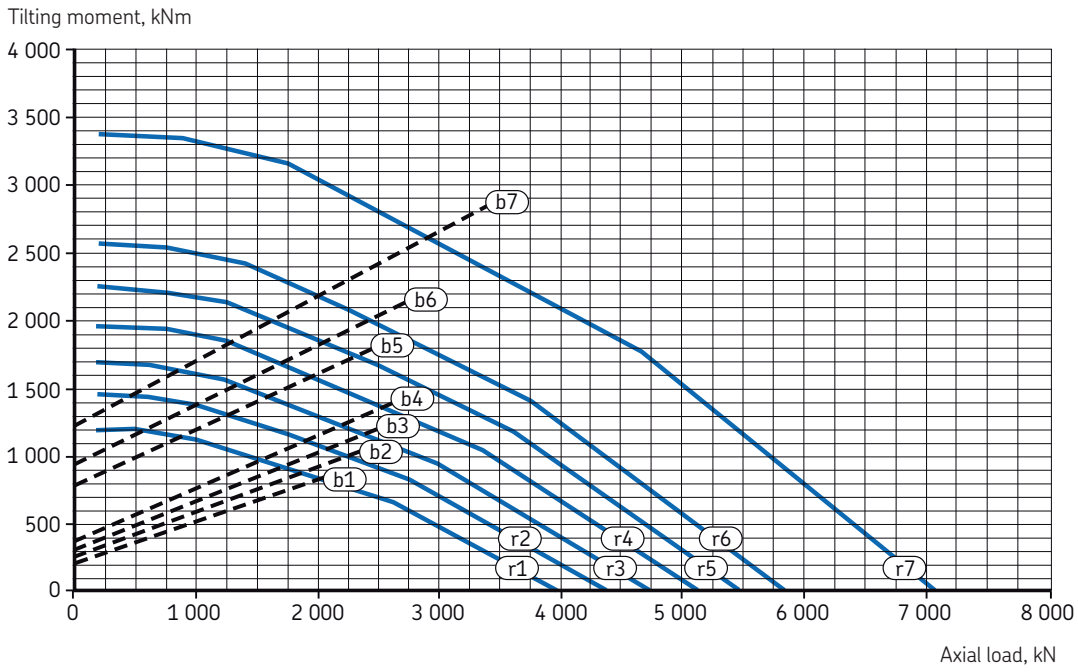

Designation	Basic load ratings axial dynamic C	static C_0	Static limiting load diagram Raceway curves	Bolt curves
–	kN		–	
RKS.060.25.1204	508	3 990	r1	b1
RKS.060.25.1314	526	4 380	r2	b2
RKS.060.25.1434	541	4 730	r3	b3
RKS.060.25.1524	557	5 110	r4	b4
RKS.060.25.1644	570	5 460	r5	b5
RKS.060.25.1754	585	5 840	r6	b6
RKS.060.30.1904	690	7 070	r7	b7

Customized four-point contact ball slewing bearings with an external gear
d_m **980 – 1 258** mm

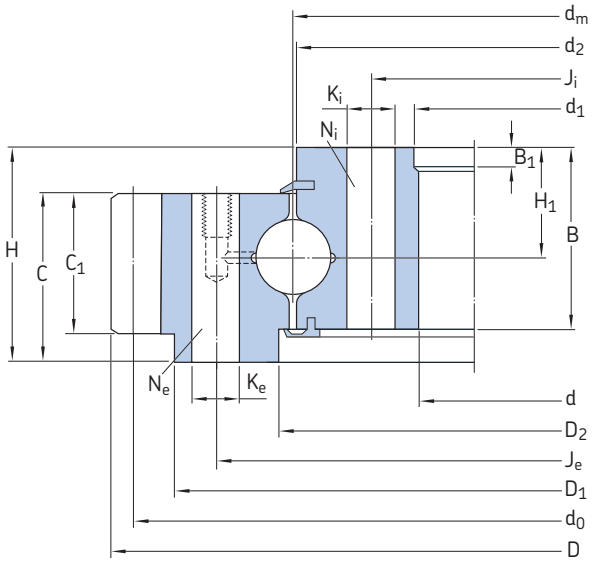

Design 1

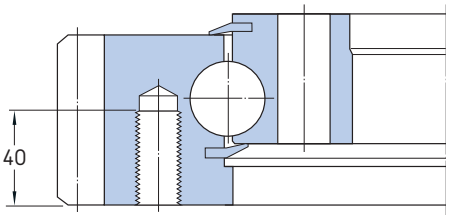

Design 2

Dimensions													**Mass**	**Designation**
Slewing bearing					Outer ring				Inner ring					
d_m	D	d	H	H_1	D_1	D_2	C	C_1	d_1	d_2	B	B_1		
mm					mm				mm				kg	–
980	1 144	868	100	51	1 088	993	79	66	870	976,5	85	10	220	**RKS.204040101001**
1 258	1 398	1 155	80	32	–	1 255	71	–	1 157	1 254,5	54	15	205	**RKS.302070202001**

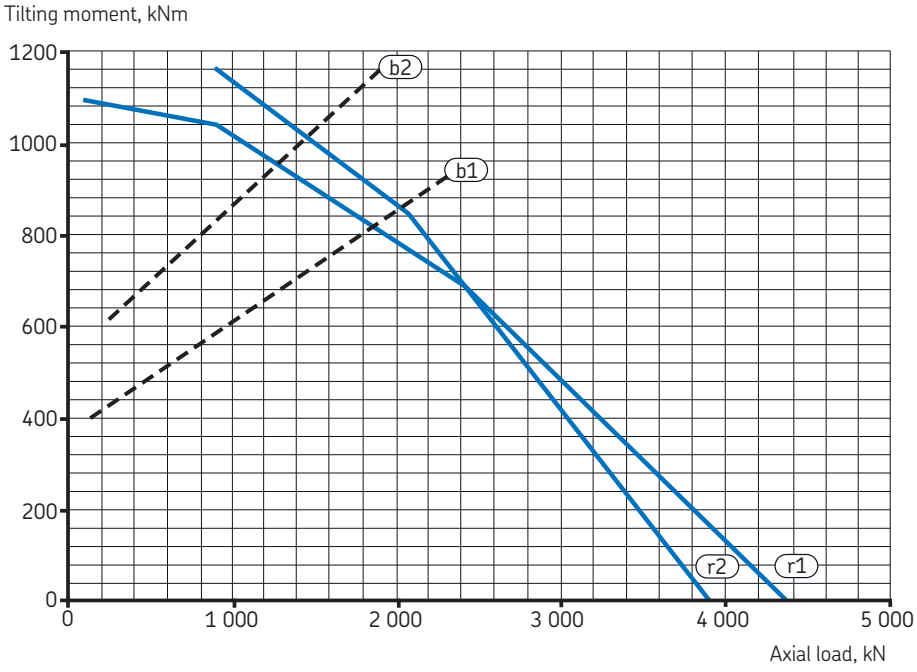

Designation	De-sign	Attachment bolt holes Outer ring			Inner ring			Gear Dimensions					Permissible tooth forces		Basic load ratings axial		Static limiting load diagram	
		J_e	K_e	N_e	J_i	K_i	N_i	d_0 [1]	m	z	x·m	k·m	$T_{fnormal}$ [2]	T_{fmax}	dynamic C	static C_0	Raceway curves	Bolt curves
–	–	mm		–	mm		–	mm		–	mm		kN		kN		–	
RKS.204040101001	1	1 050	22	36	910	22	29	1 110	10	111	8	1	65	132	588	4 470	r1	b1
RKS.302070202001	2	1 316	M 20	42	1 195	22	42	1 380	10	138	0	1	73	145	449	3 960	r2	b2

[1] Gear pitch circle diameter
[2] Normalized gear teeth; calculated for 3 000 000 operating cycles

Customized four-point contact ball slewing bearings without a gear
d_m **179 – 402** mm

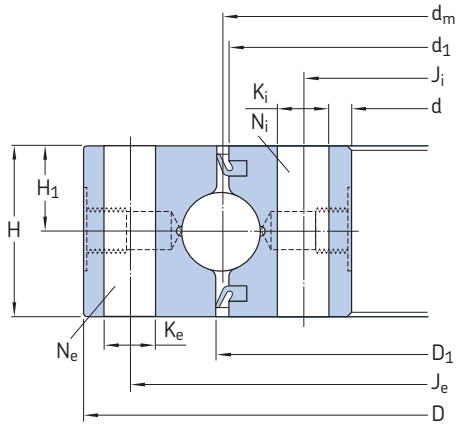

Dimensions Slewing bearing							**Attachment bolt holes** Outer ring			Inner ring			**Mass**	**Designation**
d_m	D	D_1	d	d_1	H	H_1	J_e	K_e	N_e	J_i	K_i	N_i		
mm							mm		–	mm		–	kg	–
179	234	180	125	178	25	12,5	214	11	24	144,5	11	19	6,00	**RKS.900155101001**
257	332	258	189	256	45	22,5	305	14	16	215	14	16	17,0	**RKS.951145101001**
402	475	404	335	400	45	22,5	450	14	24	360	14	24	27,0	**RKS.901175101001**

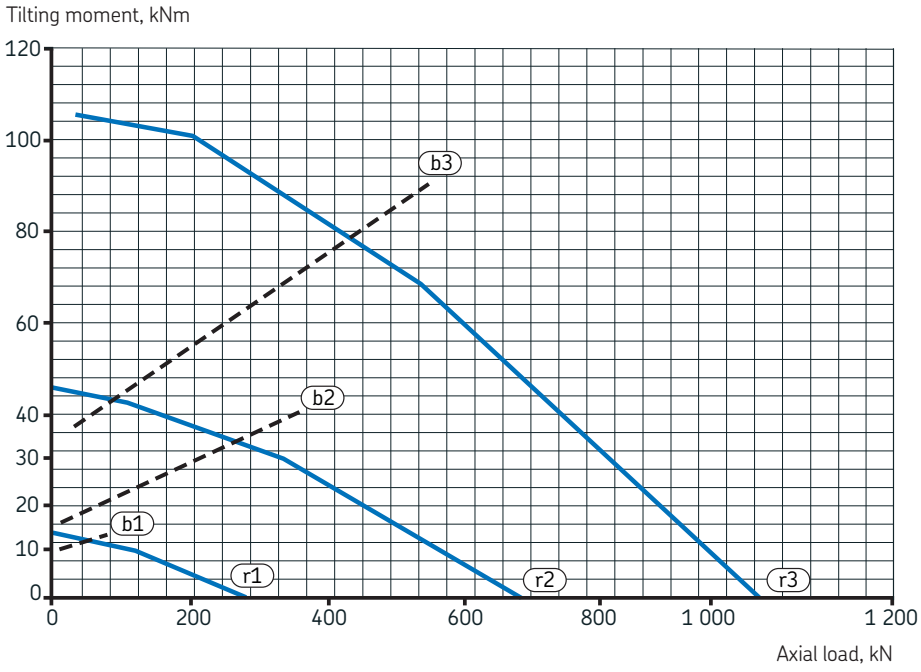

Designation	Basic load ratings axial dynamic C	static C_0	Static limiting load diagram Raceway curves	Bolt curves
–	kN		–	
RKS.900155101001	80	280	r1	b1
RKS.951145101001	239	675	r2	b2
RKS.901175101001	219	1 030	r3	b3



Single row crossed cylindrical roller slewing bearings

86 Product data – general

86 General

86 Designs

87 Medium size single row crossed cylindrical roller slewing bearings

88 Customized single row crossed cylindrical roller slewing bearings

89 Bearing data – general
89 Dimensions
89 Tolerances
89 Axial clearance, preload
89 Material
90 Corrosion protection

90 Gears

90 Seals

90 Lubrication

91 Designation system

92 Product tables

Medium size crossed cylindrical roller slewing bearings
92 with an external gear
96 with an internal gear
100 without a gear

Customized crossed cylindrical roller slewing bearings
104 with an external gear
110 with an internal gear
114 without a gear

Product data – general

General

Single row crossed cylindrical roller slewing bearings are simple in design, consisting of a one-piece inner and outer ring and cylindrical rollers separated by polyamide spacers and generally protected by integral seals.They can accommodate heavy radial loads and medium axial loads as well as tilting moments. These SKF slewing bearings are intended for bearing arrangements where stiffness is important or zero operational clearance or preload as well as constant resistance to rotation are required.

Single row crossed cylindrical roller slewing bearings require tighter specifications for the flatness and stiffness of the support surface than single row four-point contact ball slewing bearings.

Due to the wide range of applications for single row crossed cylindrical roller slewing bearings, SKF manufactures them in many executions and sizes that are available from stock or within short lead times. The actual SKF manufacturing range of customized bearings is more extensive than what appears in the product tables. SKF manufactures a variety of customized single row crossed cylindrical roller slewing bearings to meet the demands of particular applications. Customized executions can include special ring materials and unique bolt patterns. Load carrying ability, speed capability, and/or running accuracy can also be customized.

A customized slewing bearing that meets your specific requirements might already exist. Therefore, SKF recommends contacting the application engineering service very early in the design stage so that SKF engineers, with their in-depth product and application knowledge, can help you find the most suitable bearing arrangement for your application.

Designs

Single row crossed cylindrical roller slewing bearings consist of a one-piece inner and outer ring and a set of cylindrical rollers and spacers, protected by integral seals. The cylindrical rollers are inserted into the bearing via a hole in one of the two rings and are separated by polyamide spacers. The axis of rotation of adjacent rollers are at 90° to each other. After loading the roller set and spacers, the hole is closed with a plug that conforms to the raceway contour.

The SKF range of single row crossed cylindrical roller slewing bearings is divided into:

- medium size single row crossed cylindrical roller slewing bearings
- customized single row crossed cylindrical roller slewing bearings



Medium size single row crossed cylindrical roller slewing bearings

SKF medium size single row crossed cylindrical roller slewing bearings are compact, with strong, full-size rings. Depending on the size, they are available with two different fixed cross-sections within each of the three series. To simplify installation, the inner and outer rings have a standardized number of equally spaced holes for attachment bolts.

The standard SKF single row medium size crossed roller slewing bearings (→ **fig. 1**) listed in the product tables include bearings with a mean raceway diameter ranging from 414 to 1 904 mm and are available with any of the following gear configurations:

- with an external gear (**a**), RKS. 161 series designation
- with an internal gear (**b**), RKS. 162 series designation
- without a gear (**c**), RKS. 160 series designation

These slewing bearings are available from stock or within short lead times. For up-to-date information about availability, contact the SKF application engineering service.

SKF medium size crossed cylindrical roller slewing bearings feature a unique and cost-effective combination of load carrying ability, stiffness, and speed capability. These features open a wide application field for medium size crossed cylindrical roller slewing bearings. Typical applications include, but are not limited to, earth moving, construction and material handling equipment as well as robotics.

Medium size crossed cylindrical roller slewing bearings can be operated continuously at circumferential speeds of up to 1.5 m/s and up to 2 m/s for brief periods.

Fig. 1

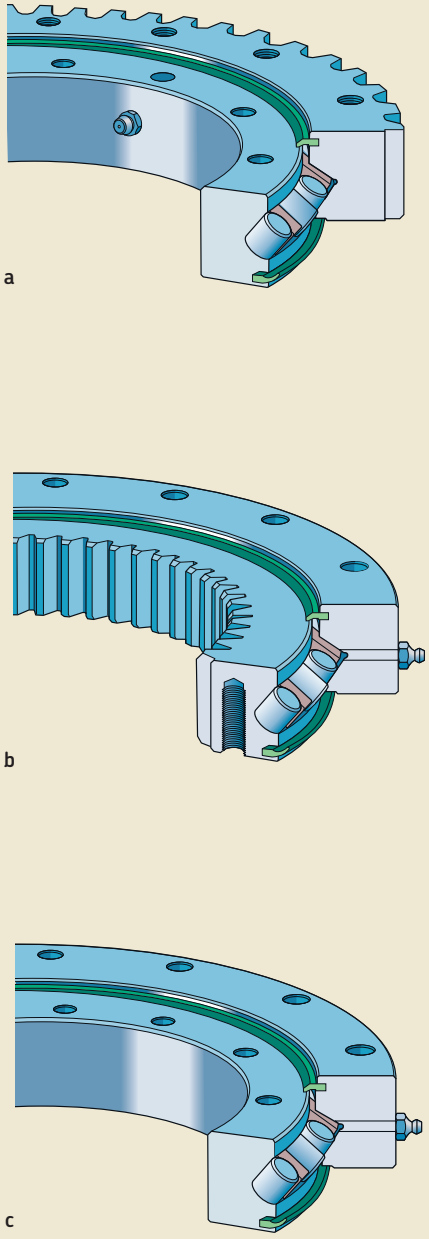

Fig. 2

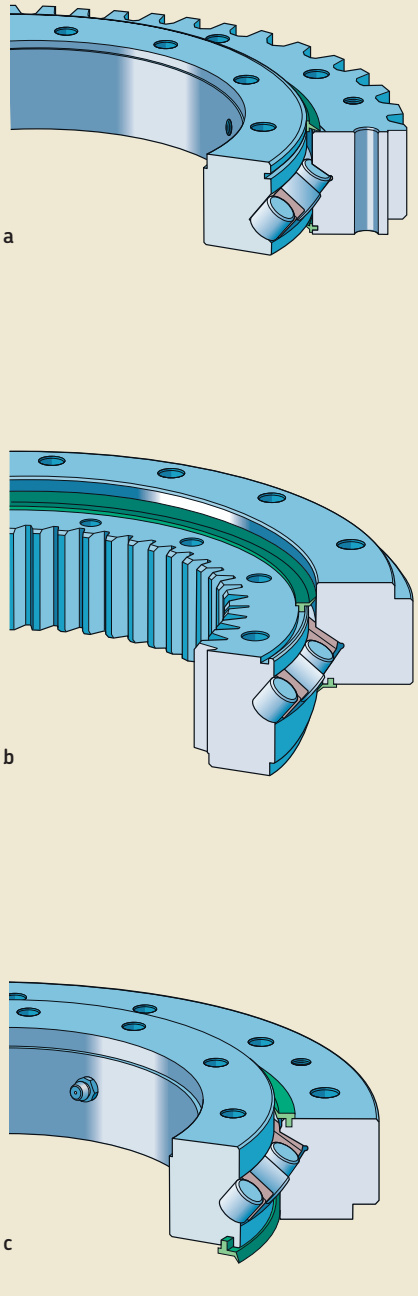

Customized single row crossed cylindrical roller slewing bearings

SKF manufactures single row crossed cylindrical roller slewing bearings in a variety of executions and sizes to meet the needs of particular applications.

The customized SKF single row crossed cylindrical roller slewing bearings (→ **fig. 2**) listed in the product tables include bearings with a mean raceway diameter ranging from 310 to 2 200 mm and are available with any of the following gear configurations or options:

- with an external gear (**a**)
- with an internal gear (**b**)
- without a gear (**c**)
- with (**c**) or without centring recesses

These customized bearings represent only a few designs and sizes, which are manufactured on a regular basis or within short lead times. Before incorporating a customized bearing in an application design, contact the SKF application engineering service for availability.

Depending on design, size and accuracy, customized single row crossed cylindrical roller slewing bearings can be operated at circumferential speeds of up to 1,5 m/s and up to 2 m/s for brief periods. For applications that will operate at higher speeds than those listed in the tables, contact the SKF application engineering service.

Bearing data – general

Dimensions

The boundary dimensions of single row crossed cylindrical roller slewing bearings are dictated by practical application requirements and do not comply with any international or national standard. Medium size bearings up to and including 1 094 mm mean raceway diameter are dimensionally interchangeable with competitors' products.

Tolerances

The dimensional and running accuracy of SKF single row crossed cylindrical roller slewing bearings are listed in:

- **table 1**: Diameter tolerances (→ **fig. 3**)
- **table 2**: Tolerances of tip circle and attachment bolt hole diameters (→ **fig. 3**)
- **table 3**: Running accuracy

The tolerance for the total height H is ±1 mm for all single row crossed cylindrical roller slewing bearings.

Axial clearance, preload

Crossed cylindrical roller slewing bearings are manufactured with zero clearance or preload.

Material

The rings of medium size crossed cylindrical roller slewing bearings up to a mean raceway diameter of 1 094 mm are made as standard of C 45 E tempered steel, in accordance with EN 10083-2:2006. Crossed cylindrical roller slewing bearings with a mean raceway diameter larger than 1 094 mm are made of 42CrMo4 bearing steel for induction hardening, in accordance with EN 10083-3:2006.

The rings of customized crossed cylindrical roller slewing bearings listed in the product tables starting on **page 102** are produced either from

- a modified heat-treatable 42 C 2 steel, in accordance with NFA 35-557:1983, or 46Cr2 steel, in accordance to EN 10083-3-2006
- a 42CrMo4 bearing steel for induction hardening, in accordance with EN10083-3:2006

Inner and outer ring raceways are surface induction-hardened while leaving the remainder of the rings, including the gears, unaffected by the hardening process.

Table 1

Diameter tolerances

Nominal diameter		Diameter tolerances			
		Ungeared inner and/or outer diameter	Centring diameters[1] Inside	Outside	Bolt hole pitch circle diameters
over	incl.	(d, D)	(d_{2c}, D_{2c})	(d_{1c}, D_{1c})	(J_i, J_e)
mm		mm			
0	**500**	±1	0/+0,2	0/–0,2	±0,5
500	**1 000**	±1	0/+0,3	0/–0,3	±0,5
1 000	**1 500**	±1	0/+0,35	0/–0,35	±0,6
1 500	**2 000**	±1	0/+0,4	0/–0,4	±0,8
2 000	**2 500**	±1	0/+0,4	0/–0,4	±1

[1] Applies only to customized bearings

Table 2

Tolerances of tip circle and attachment bolt hole diameters

Tip circle diameters D_G and d_G			Bolt hole diameters K_e and K_i	
Module	Tolerances		Nominal	Tolerance
m	External gear	Internal gear	diameter	
mm				
5	0/–0,25	0/+0,25	**11**	±0,3
6	0/–0,3	0/+0,3	**14**	±0,3
8	0/–0,4	0/+0,4	**16**	±0,4
10	0/–0,5	0/+0,5	**18**	±0,4
14	0/–0,7	0/+0,7	**22**	±0,4
16	0/–0,8	0/+0,8		

Fig. 3

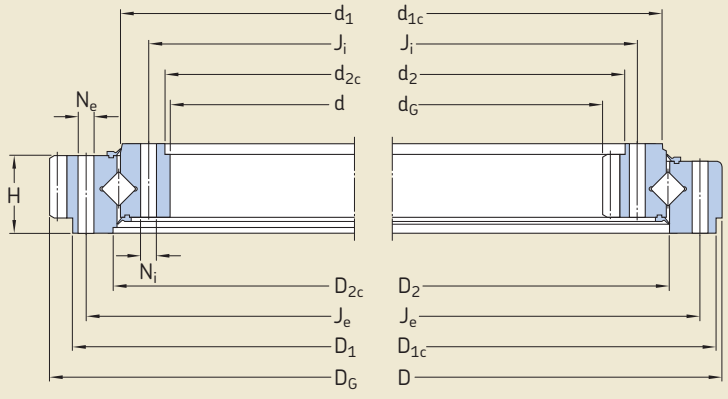

4

The cylindrical rollers are made of 100Cr6 bearing steel for through-hardening, in accordance with EN ISO 683-17:2000.

Corrosion protection

Single row crossed cylindrical roller slewing bearings are protected, as standard, by a solvent free rust inhibitor.

Gears

The gear teeth are manufactured to an SKF specification that closely follows accuracy grade 12 in accordance with ISO 1328-2:1997 and are not hardened. Guideline values for the permissible tooth forces can be obtained from the product tables.

The gear of a new bearing is coated with a preservative. After mounting has been completed, lubricant needs to be applied to the gear. This lubricant should have good adhesive properties and high resistance to water washout. Additionally, the lubricant has to withstand at least temperatures of +100 °C and has to have a base oil viscosity of 500 mm²/s at +40 °C or higher.

Seals

The integral seals are made of profiled strips of non-reinforced acrylonitrile-butadiene rubber (NBR). They seal axially against the side face of the inner or outer ring (→ **fig. 4a**) or radially against the cylindrical surface of the inner or outer ring (→ **fig. 4b**). This material has very good engineering properties and shows good resistance to most mineral oils and greases. The permissible operating temperatures of the seal material range from –40 to + 110 °C.

Lubrication

Standard SKF single row crossed cylindrical roller slewing bearings are filled with a mineral oil based grease with a consistency of 2 on the NLGI scale using a lithium soap thickener and containing extreme pressure additives. The base oil viscosity is 200 mm²/s at 40 °C and 16 mm²/s at 100 °C. This grease has good rust inhibiting properties and a temperature range of –20 up to +110 °C. Reliable lubrication according to the SKF traffic light concept occurs when operating temperatures range from +30 to +110°C.

Table 3

Running accuracy

Nominal mean raceway diameter d_m		Running accuracy Medium size bearings		Customized bearings	
		Radial runout[1]	Axial runout[2]	Radial runout[1]	Axial runout[2]
over	incl.	max	max	max	max
mm		mm			
0	**500**	0,2	0,3	0,2	0,2
500	**1 000**	0,3	0,4	0,3	0,2
1 000	**1 500**	0,35	0,5	0,35	0,2
1 000	**2 000**	0,45	0,6	0,4	0,25
1 500	**2 500**	0,5	0,7	0,45	0,25

[1] Radial runout of the centring of inner or outer ring of assembled bearing
[2] Axial runout of the mating surface of inner or outer ring of assembled bearing

Fig. 4

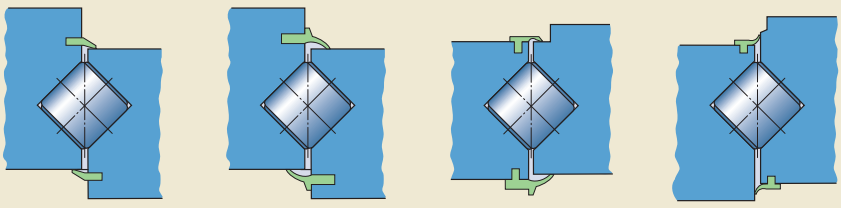

Fig. 5

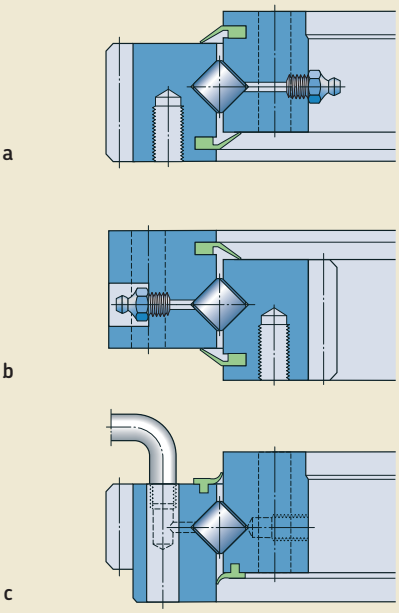

Medium size single row crossed cylindrical roller slewing bearings can be relubricated through four equally spaced grease fittings A M 10×1 to DIN 71412:1987:

- in the inner ring of bearings with an external gear (→ **fig. 5a**)
- in the outer ring of bearings with an internal gear (→ **fig. 5b**)
- in the outer ring of bearings without a gear

Relubrication features of customized slewing bearings (→ **fig. 5c**) depend on the needs of the application. For additional information, contact the SKF application engineering service.

Guidelines to determine relubrication intervals for slewing bearings in vertical arrangements under normal and clean conditions are provided in the chapter “Lubrication”, starting on **page 26**.

Designation system

The designation system for SKF medium size crossed roller slewing bearings consists only of a few figures, the significance of which is described in **table 5**.

The designation system for SKF customized slewing bearings consists of several figures and is described briefly in **table 6** "Designation system of customized slewing bearings" on **page 59**.

Table 5

Designation system of medium size crossed cylindrical roller slewing bearings

Examples: **RKS.162.14.0414**
RKS.160.20.1904

RKS.	16	2.	14.	0414
RKS.	16	0.	20.	1904

Bearing identification

RKS SKF slewing bearing

Series identification

16 Medium size crossed cylindrical roller slewing bearing

Identification of gear position

0 Without a gear
1 With an external gear
2 With an internal gear

Roller size identification

14 14 mm roller diameter
16 16 mm roller diameter
20 20 mm roller diameter

Identification of bearing size

0414 414 mm mean raceway diameter
to
1904 1 904 mm mean raceway diameter

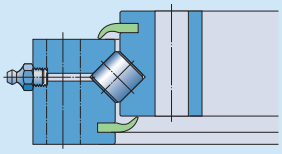

160 series
without a gear

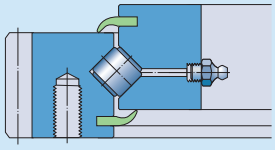

161 series
with an external gear

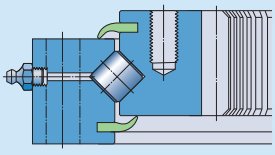

162 series
with an internal gear

Medium size crossed cylindrical roller slewing bearings with an external gear

d_m **414 – 1 094** mm

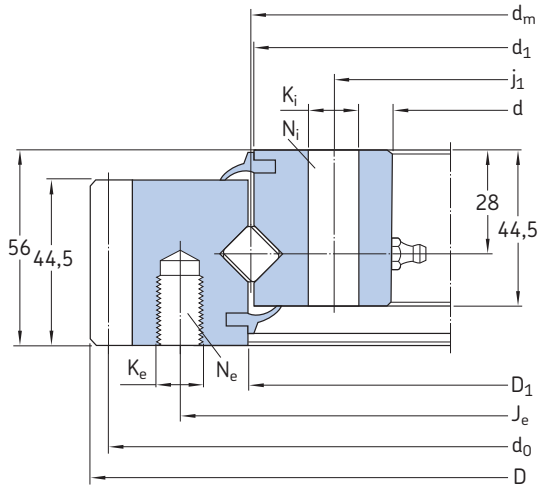

Dimensions					Attachment bolt holes Outer ring			Inner ring			Mass	Designation
d_m	D	D_1	d	d_1	J_e	K_e	N_e	J_i	K_i	N_i		
mm					mm		–	mm		–	kg	–
414	504	416	344	412	455	M 12	20	368	14	24	32,0	**RKS.161.14.0414**
544	640,8	546	474	542	585	M 12	28	498	14	32	44,0	**RKS.161.14.0544**
644	742,8	646	574	642	685	M 12	32	598	14	36	52,0	**RKS.161.14.0644**
744	838,8	746	674	742	785	M 12	36	698	14	40	59,0	**RKS.161.14.0744**
844	950,4	846	774	842	885	M 12	36	798	14	40	71,0	**RKS.161.14.0844**
944	1 046,4	946	874	942	985	M 12	40	898	14	44	77,0	**RKS.161.14.0944**
1 094	1 198,4	1 096	1 024	1 092	1 135	M 12	44	1 048	14	48	91,0	**RKS.161.14.1094**

Relubrication can be done through 4 equally spaced grease fittings A M10×1 to DIN 71412 in the inner ring.

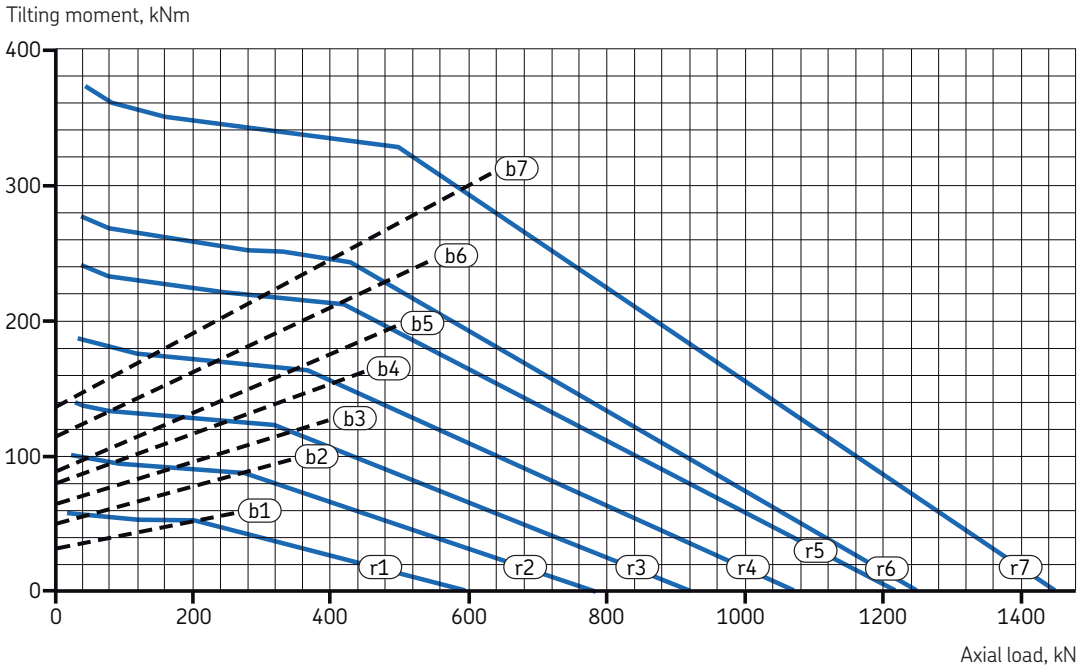

Designation	Gear Dimensions				Permissible axial tooth forces		Basic load ratings		Static limiting load diagram	
	d_0[1]	m	z	k·m	$T_{fnormal}$[2]	T_{fmax}	dynamic C	static C_0	Raceway curves	Bolt curves
–	mm		–	mm	kN		kN		–	
RKS.161.14.0414	495	5	99	–0,5	12	46	167	595	r1	b1
RKS.161.14.0544	630	6	105	–0,6	16	54	194	784	r2	b2
RKS.161.14.0644	732	6	122	–0,6	16	54	210	919	r3	b3
RKS.161.14.0744	828	6	138	–0,6	16	54	228	1 070	r4	b4
RKS.161.14.0844	936	8	117	–0,8	21	72	244	1 220	r5	b5
RKS.161.14.0944	1 032	8	129	–0,8	21	72	258	1 250	r6	b6
RKS.161.14.1094	1 184	8	148	–0,8	21	72	279	1 450	r7	b7

[1] Gear pitch circle diameter
[2] Normalized gear teeth; calculated for 3 000 000 operating cycles

Medium size crossed cylindrical roller slewing bearings with an external gear
d_m **1 204 – 1 904** mm

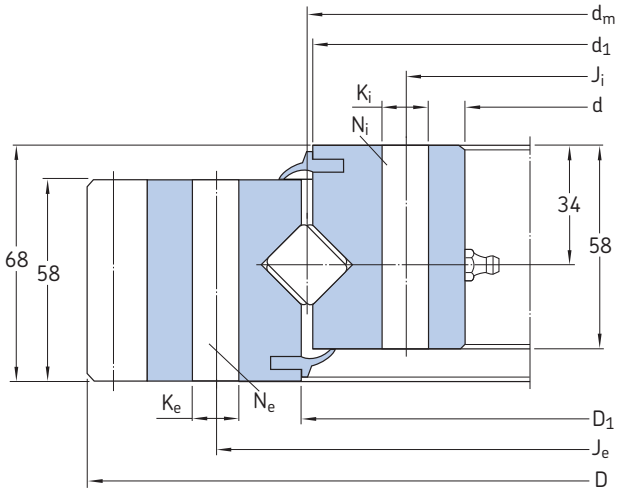

Dimensions					Attachment bolt holes Outer ring			Inner ring			Mass	Designation
d_m	D	D_1	d	d_1	J_e	K_e	N_e	J_i	K_i	N_i		
mm					mm		–	mm		–	kg	–
1 204	1 338	1 206	1 119	1 202	1 257	16	45	1 151	16	45	155	**RKS.161.16.1204**
1 314	1 448	1 317	1 229	1 312	1 367	16	50	1 261	16	50	168	**RKS.161.16.1314**
1 424	1 558	1 427	1 339	1 422	1 477	16	54	1 371	16	54	182	**RKS.161.16.1424**
1 534	1 668	1 537	1 449	1 532	1 587	16	60	1 481	16	60	195	**RKS.161.16.1534**
1 644	1 791	1 647	1 536	1 642	1 708	22	54	1 580	22	54	242	**RKS.161.16.1644**
1 754	1 901	1 757	1 646	1 752	1 818	22	60	1 690	22	60	258	**RKS.161.16.1754**
1 904	2 073,4	1 907	1 796	1 902	1 968	22	64	1 840	22	64	305	**RKS.161.20.1904**

Relubrication can be done through 4 equally spaced grease fittings A M10×1 to DIN 71412 in the inner ring.

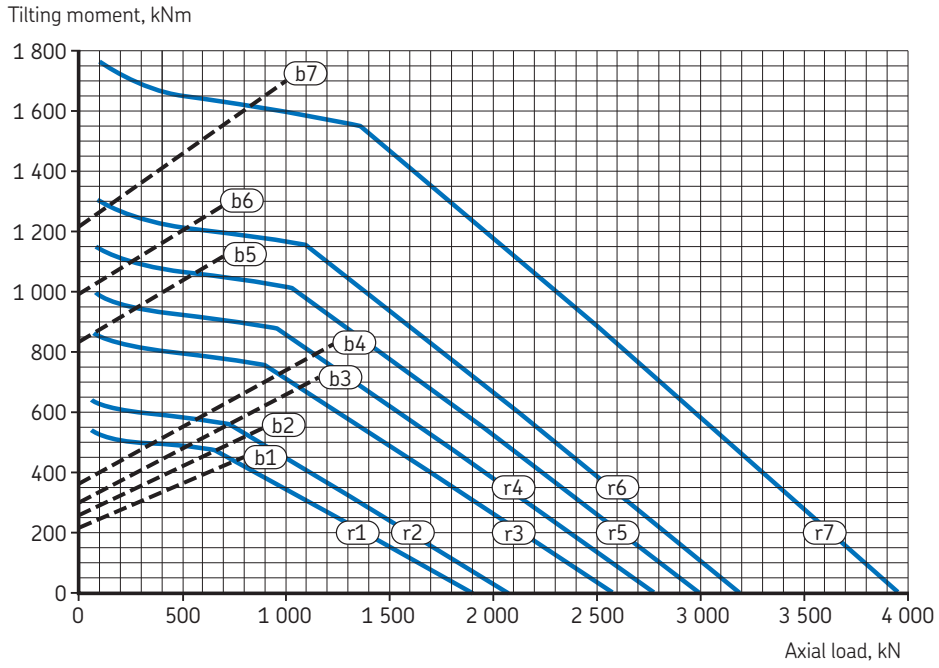

Designation	Gear Dimensions					Permissible tooth forces		Basic load ratings axial		Static limiting load diagram	
	d_0[1]	m	z	x·m	k·m	$T_{fnormal}$[2]	T_{fmax}	dynamic C	static C_0	Raceway curves	Bolt curves
–	mm		–	mm		kN		kN		–	
RKS.161.16.1204	1 310	10	131	+5	–1	45	130	402	1 900	r1	b1
RKS.161.16.1314	1 420	10	142	+5	–1	45	130	421	2 070	r2	b2
RKS.161.16.1424	1 530	10	153	+5	–1	45	130	439	2 580	r3	b3
RKS.161.16.1534	1 640	10	164	+5	–1	45	130	456	2 770	r4	b4
RKS.161.16.1644	1 760	10	176	+6,5	–1	45	130	475	2 990	r5	b5
RKS.161.16.1754	1 870	10	187	+6,5	–1	45	130	491	3 180	r6	b6
RKS.161.20.1904	2 030	14	145	+9,1	–1,4	62	181	644	3 950	r7	b7

[1] Gear pitch circle diameter
[2] Normalized gear teeth; calculated for 3 000 000 operating cycles

Medium size crossed cylindrical roller slewing bearings with an internal gear
d_m **414 – 1 094** mm

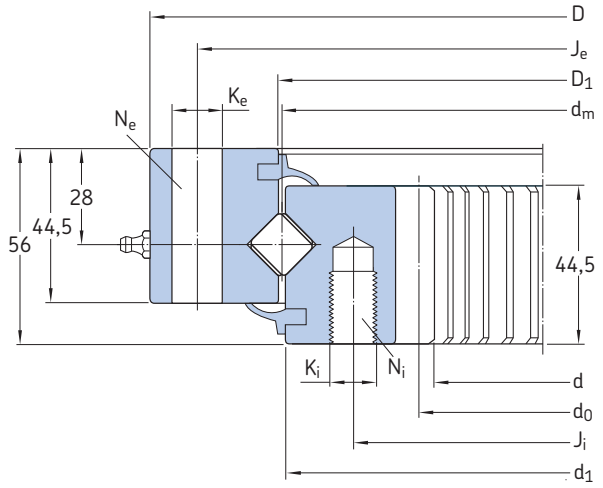

Dimensions					Attachment bolt holes Outer ring			Inner ring			Mass	Designation
d_m	D	D_1	d	d_1	J_e	K_e	N_e	J_i	K_i	N_i		
mm					mm		–	mm		–	kg	–
414	486	416	326.5	412	460	14	24	375	M 12	24	31,0	**RKS.162.14.0414**
544	616	546	445.2	542	590	14	32	505	M 12	32	42,0	**RKS.162.14.0544**
644	716	646	547.2	642	690	14	36	605	M 12	36	50,0	**RKS.162.14.0644**
744	816	746	649.2	742	790	14	40	705	M 12	40	58,0	**RKS.162.14.0744**
844	916	846	737.6	842	890	14	40	805	M 12	40	69,0	**RKS.162.14.0844**
944	1016	946	841.6	942	990	14	44	905	M 12	44	76,0	**RKS.162.14.0944**
1 094	1 166	1 096	985.6	1 092	1 140	14	48	1 055	M 12	48	91,0	**RKS.162.14.1094**

Relubrication can be done through 4 equally spaced grease fittings A M10×1 to DIN 71412 in the outer ring.

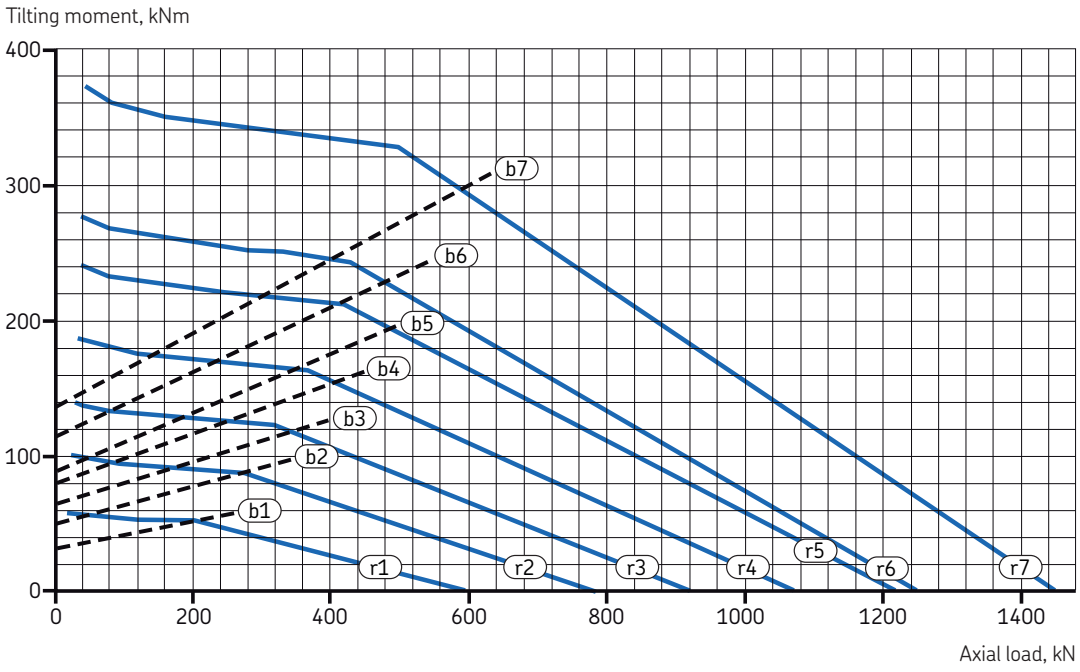

Designation	Gear Dimensions				Permissible tooth forces		Basic load ratings axial		Static limiting load diagram	
	d_0 [1]	m	z	k·m	$T_{fnormal}$ [2]	T_{fmax}	dynamic C	static C_0	Raceway curves	Bolt curves
–	mm		–	mm	kN		kN		–	
RKS.162.14.0414	335	5	67	–0,75	12	49	167	595	r1	b1
RKS.162.14.0544	456	6	76	–0,6	16	65	194	784	r2	b2
RKS.162.14.0644	558	6	93	–0,6	16	65	210	919	r3	b3
RKS.162.14.0744	660	6	110	–0,6	16	65	228	1 070	r4	b4
RKS.162.14.0844	752	8	94	–0,8	21	87	244	1 220	r5	b5
RKS.162.14.0944	856	8	107	–0,8	21	87	258	1 250	r6	b6
RKS.162.14.1094	1 000	8	125	–0,8	21	87	279	1 450	r7	b7

[1] Gear pitch circle diameter
[2] Normalized gear teeth; calculated for 3 000 000 operating cycles

Medium size crossed cylindrical roller slewing bearings with an internal gear
d_m **1 204 – 1 904** mm

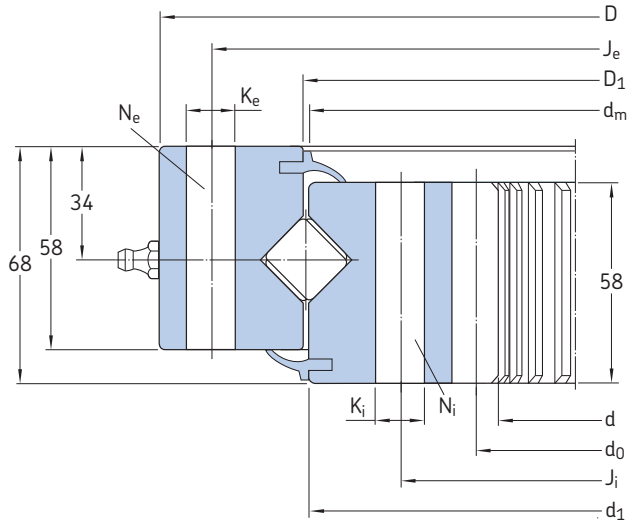

Dimensions					Attachment bolt holes Outer ring			Inner ring			Mass	Designation
d_m	D	D_1	d	d_1	J_e	K_e	N_e	J_i	K_i	N_i		
mm					mm		–	mm		–	kg	–
1 204	1 289	1 206	1 072	1 202	1 257	16	45	1 151	16	45	148	**RKS.162.16.1204**
1 314	1 399	1 316,5	1 182	1 312	1 367	16	50	1 261	16	50	160	**RKS.162.16.1314**
1 424	1 509	1 426,5	1 292	1 422	1 477	16	54	1 371	16	54	175	**RKS.162.16.1424**
1 534	1 619	1 536,5	1 402	1 532	1 587	16	60	1 481	16	60	190	**RKS.162.16.1534**
1 644	1 752	1 646,5	1 495	1 642	1 708	22	54	1 580	22	54	240	**RKS.162.16.1644**
1 754	1 862	1 756,5	1 605	1 751	1 818	22	60	1 690	22	60	255	**RKS.162.16.1754**
1 904	2 012	1 906,5	1 729	1 902	1 968	22	64	1 840	22	64	305	**RKS.162.20.1904**

Relubrication can be done through 4 equally spaced grease fittings A M10×1 to DIN 71412 in the outer ring.

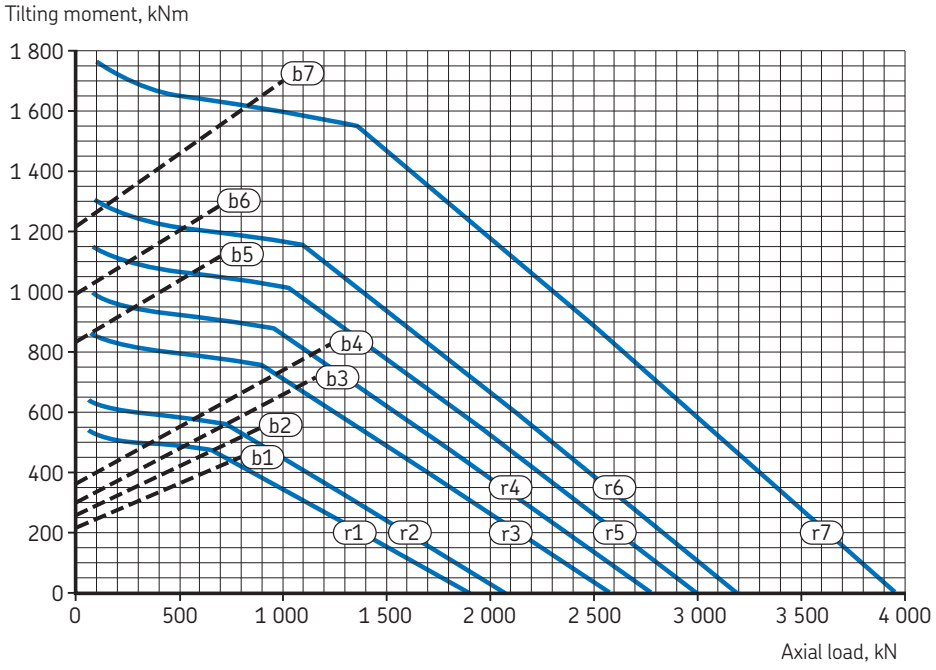

Designation	Gear Dimensions					Permissible tooth forces		Basic load ratings axial		Static limiting load diagram	
	d_0[1]	m	z	x·m	k·m	$T_{fnormal}$[2]	T_{fmax}	dynamic C	static C_0	Raceway curves	Bolt curves
–	mm		–	mm		kN		kN		–	
RKS.162.16.1204	1 080	10	108	+0,5	–1	48	169	402	1 900	r1	b1
RKS.162.16.1314	1 190	10	119	+0,5	–1	48	169	421	2 070	r2	b2
RKS.162.16.1424	1 300	10	130	+0,5	–1	48	169	439	2 580	r3	b3
RKS.162.16.1534	1 410	10	141	+0,5	–1	48	169	456	2 770	r4	b4
RKS.162.16.1644	1 500	10	150	+0,65	–1	48	169	475	2 990	r5	b5
RKS.162.16.1754	1 610	10	161	+0,65	–1	48	169	491	3 180	r6	b6
RKS.162.20.1904	1 736	14	124	+0,65	–1,4	69	230	644	3 950	r7	b7

[1] Gear pitch circle diameter
[2] Normalized gear teeth; calculated for 3 000 000 operating cycles

Medium size crossed cylindrical roller slewing bearings without a gear
d_m **414 – 1 094** mm

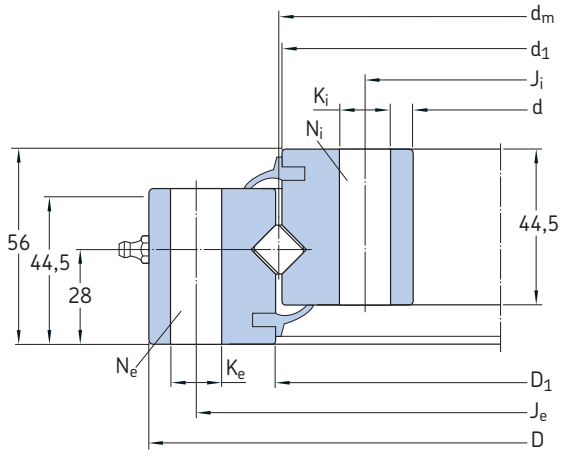

Dimensions					Attachment bolt holes Outer ring			Inner ring			Mass	Designation
d_m	D	D_1	d	d_1	J_e	K_e	N_e	J_i	K_i	N_i		
mm					mm		–	mm		–	kg	–
414	486	416	344	412	460	14	24	368	14	24	28,0	**RKS.160.14.0414**
544	616	546	474	542	590	14	32	498	14	32	38,0	**RKS.160.14.0544**
644	716	646	574	642	690	14	36	598	14	36	44,0	**RKS.160.14.0644**
744	816	746	674	742	790	14	40	698	14	40	52,0	**RKS.160.14.0744**
844	916	846	774	842	890	14	40	798	14	40	60,0	**RKS.160.14.0844**
944	1016	946	874	942	990	14	44	898	14	44	67,0	**RKS.160.14.0944**
1 094	1 166	1 096	1 024	1 092	1 140	14	48	1 048	14	48	77,0	**RKS.160.14.1094**

Relubrication can be done through 4 equally spaced grease fittings A M10×1 to DIN 71412 in the outer ring.

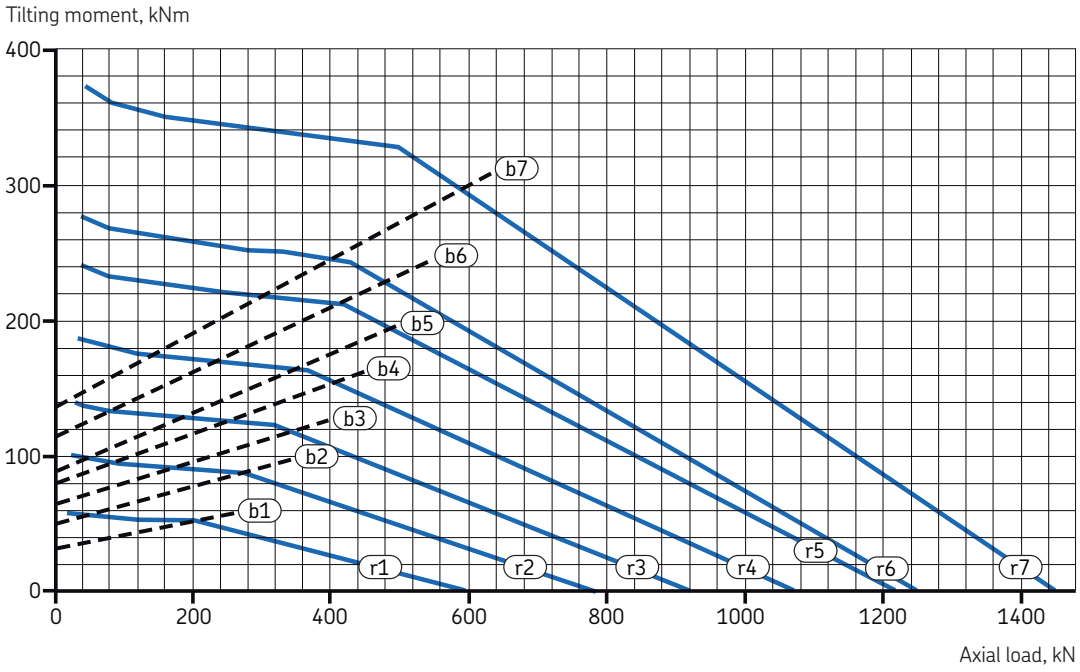

Designation	Basic load ratings axial dynamic C	static C_0	Static limiting load diagram Raceway curves	Bolt curves
–	kN		–	
RKS.160.14.0414	167	595	r1	b1
RKS.160.14.0544	194	784	r2	b2
RKS.160.14.0644	210	919	r3	b3
RKS.160.14.0744	228	1 070	r4	b4
RKS.160.14.0844	244	1 220	r5	b5
RKS.160.14.0944	258	1 250	r6	b6
RKS.160.14.1094	279	1 450	r7	b7

Medium size crossed cylindrical roller slewing bearings without a gear

d_m **1 204 – 1 904** mm

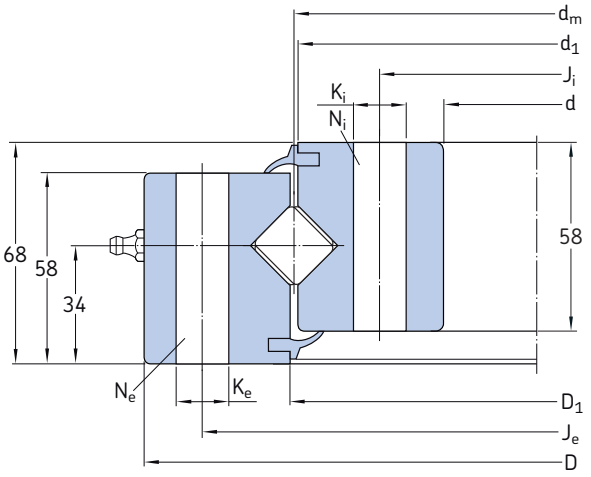

Dimensions					Attachment bolt holes Outer ring			Inner ring			Mass	Designation
d_m	D	D_1	d	d_1	J_e	K_e	N_e	J_i	K_i	N_i		
mm					mm		–	mm		–	kg	–
1 204	1 289	1 206	1 119	1 202	1 257	16	45	1 151	16	45	124	**RKS.160.16.1204**
1 314	1 399	1 316,5	1 229	1 312	1 367	16	50	1 261	16	50	135	**RKS.160.16.1314**
1 424	1 509	1 426,5	1 339	1 422	1 477	16	54	1 371	16	54	146	**RKS.160.16.1424**
1 534	1 619	1 536,5	1 449	1 532	1 587	16	60	1 481	16	60	158	**RKS.160.16.1534**
1 644	1 752	1 646,5	1 536	1 642	1 708	22	54	1 580	22	54	215	**RKS.160.16.1644**
1 754	1 862	1 756,5	1 646	1 752	1 818	22	60	1 690	22	60	228	**RKS.160.16.1754**
1 904	2 012	1 906,5	1 796	1 902	1 968	22	64	1 840	22	64	248	**RKS.160.20.1904**

Relubrication can be done through 4 equally spaced grease fittings A M10×1 to DIN 71412 in the outer ring.

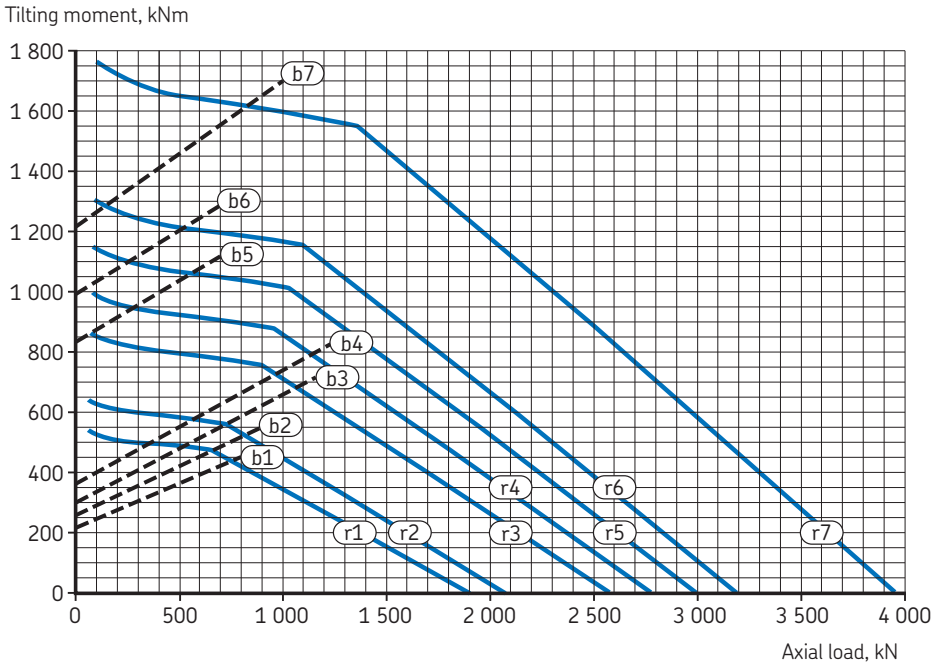

Designation	Basic load ratings axial dynamic C	static C_0	Static limiting load diagrams Raceway curves	Bolt curves
–	kN		–	
RKS.160.16.1204	402	1 900	r1	b1
RKS.160.16.1314	421	2 070	r2	b2
RKS.160.16.1424	439	2 580	r3	b3
RKS.160.16.1534	456	2 770	r4	b4
RKS.160.16.1644	475	2 990	r5	b5
RKS.160.16.1754	491	3 180	r6	b6
RKS.160.20.1904	644	3 950	r7	b7

Customized crossed cylindrical roller slewing bearings with an external gear
d_m **310 – 675** mm

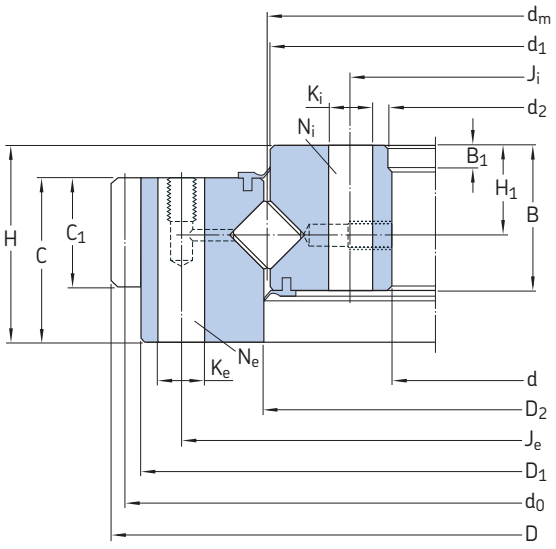

Design 1

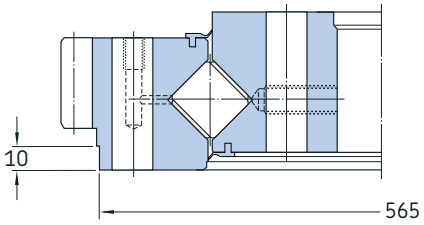

Design 2

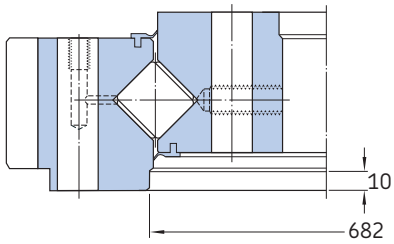

Design 3

Dimensions Slewing bearing					Outer ring				Inner ring				**Mass**	**Designation**
d_m	D	d	H	H_1	D_1	D_2	C	C_1	d_1	d_2	B	B_1		
mm					mm				mm				kg	–
310	403,5	233	55	28	379	312	43	37	308	235	45	10	24,0	**RKS.921150303001**
474	589,5	378	75	37	567	476	60	40	472	384	58	10	62,0	**RKS.121400202001**
574	695	477	77	35	671	576	64	42	572	480	57	9	79,0	**RKS.121390101002**
675	816	571	90	42	781	677	73	65	673	574	67	10	117	**RKS.122290101002**

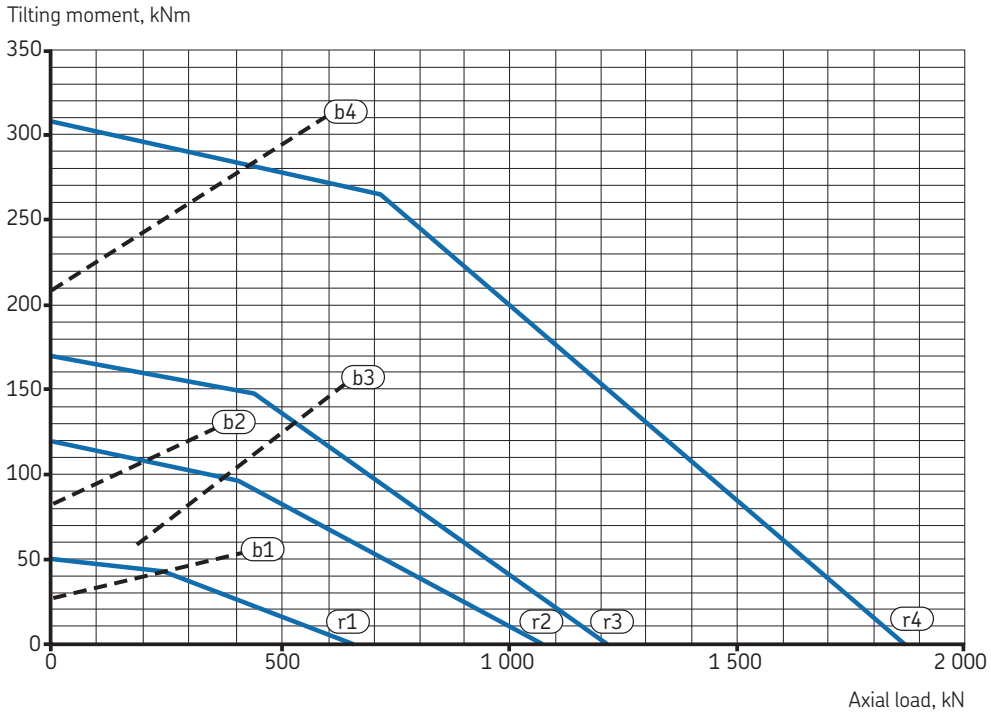

Designation	De-sign	Attachment bolt holes Outer ring			Inner ring			Gear Dimensions					Permissible tooth forces		Basic load ratings axial dynamic	static	Static limiting load diagram Raceway curves	Bolt curves
		J_e	K_e	N_e	J_i	K_i	N_i	d_0[1]	m	z	x·m	k·m	$T_{fnormal}$[2]	T_{fmax}	C	C_0		
–	–	mm		–	mm		–	mm		–	mm		kN		kN		–	
RKS.921150303001	1	358	13	24	259	13	27[3]	396	4,5	88	0	0,752	17	35	245	697	r1	b1
RKS.121400202001	2	540	16	36	410	16	35	580,5	4,5	129	0	0	19	38	304	1 050	r2	b2
RKS.121390101002	1	640	18	36	508	18	35	685	5	137	0	0	21	43	339	1 280	r3	b3
RKS.122290101002	3	753	22	36	604	22	35	792	6	132	6,552	0,552	40	79	495	1 880	r4	b4

[1] Gear pitch circle diameter
[2] Normalized gear teeth; calculated for 3 000 000 operating cycles
[3] Attachment bolt holes not equally spaced

Customized crossed cylindrical roller slewing bearings with an external gear

d_m **760 – 1 117** mm

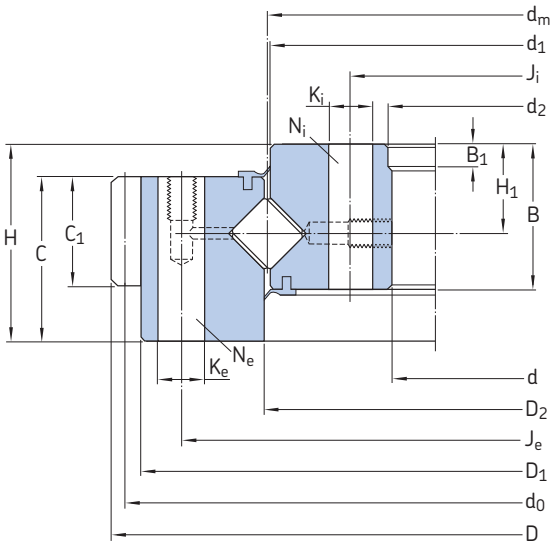

Design 1

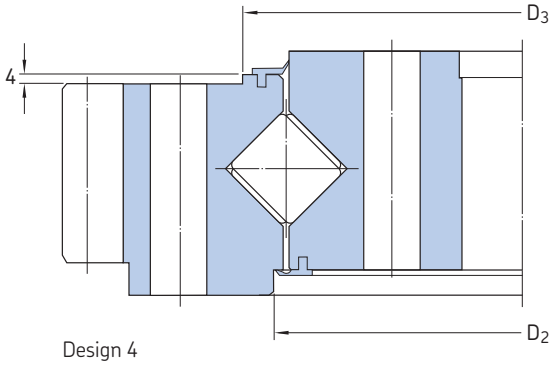

Design 4

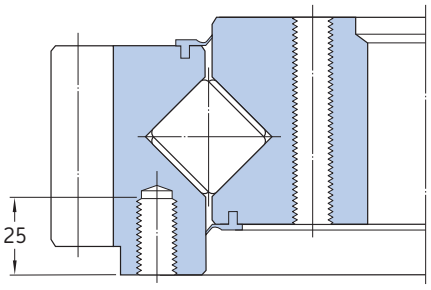

Design 5

Dimensions Slewing bearing					Outer ring					Inner ring				**Mass**	**Designation**
d_m	D	d	H	H_1	D_1	D_2	D_3	C	C_1	d_1	d_2	B	B_1		
mm					mm					mm				kg	–
760	864	668	82	39	835	762	–	64	56	758	680	61	10	97,0	**RKS.221310101001**
823	979	715	100	47	935	845	853	79	63	821	718	84	10	180	**RKS.222500101001**
980	1 080	886	82	32	1 040	982	–	72	64	978	895	53	10	120	**RKS.221300101001**
980	1 144	868	100	50	1 088	993	1 010	81	68	978	870	88	10	230	**RKS.222600101001**
1 117	1 289,5	980	114	60	1 240	1 119	–	90	75	1 115	985	96	10	330	**RKS.324012324001**
1 117	1 296	980	114	60	1 240	1 119	–	90	80	1 115	985	96	10	340	**RKS.322300101001**

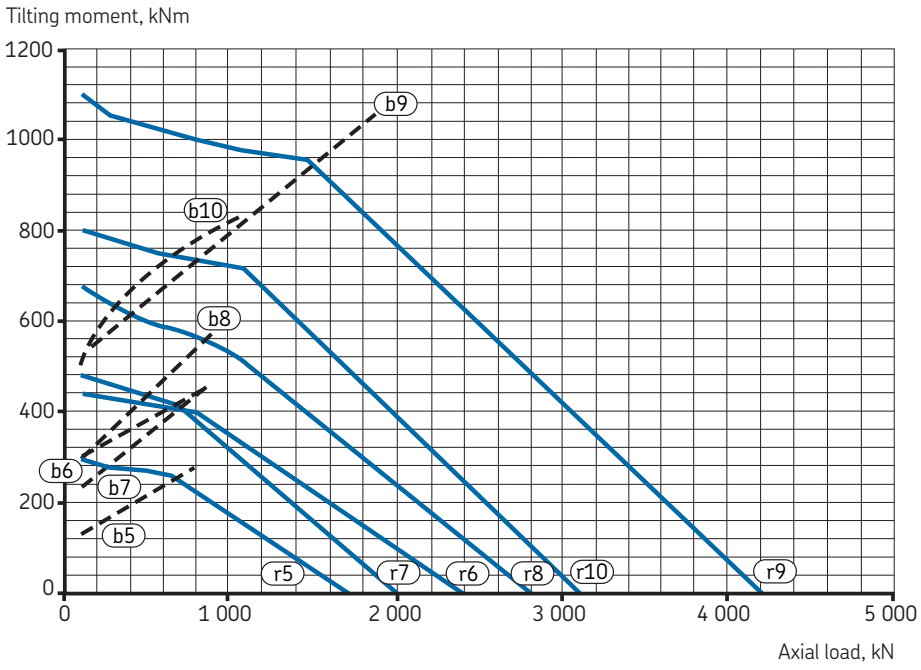

Designation	De-sign	Attachment bolt holes Outer ring			Inner ring			Gear Dimensions					Permissible tooth forces		Basic load ratings axial dynamic	static	Static limiting load diagram Raceway	Bolt
		J_e	K_e	N_e	J_i	K_i	N_i	d_0[1]	m	z	x·m	k·m	$T_{fnormal}$[2]	T_{fmax}	C	C_0	curves	curves
–	–	mm		–	mm		–	mm		–	mm		kN		kN		–	
RKS.221310101001	5	800	M 16	24	706	M 16	25	852	6	142	0	0	34	69	397	1 710	r5	b5
RKS.222500101001	4	893	22	28[3]	753	22	28[3]	940	10	94	11	1,5	74	136	558	2 330	r6	b6
RKS.221300101001	5	1 015	M 16	30	922	M 16	30	1 064	8	133	0	0	63	115	454	2 040	r7	b7
RKS.222600101001	4	1 050	22	28[3]	910	22	26[3]	1 122	11	102	0	0	89	163	607	2 740	r8	b8
RKS.324012324001	1	1 198	22	40	1 035	22	40	1 250	10	125	10,5	0,75	91	167	1 090	4 100	r9	b9
RKS.322300101001	1	1 198	22	28	1 035	22	28	1 260	12	105	7,08	1,08	114	210	655	3 160	r10	b10

[1] Gear pitch circle diameter
[2] Normalized gear teeth; calculated for 3 000 000 operating cycles
[3] Attachment bolt holes not equally spaced

Customized crossed cylindrical roller slewing bearings with an external gear
d_m **1 250 – 1 600** mm

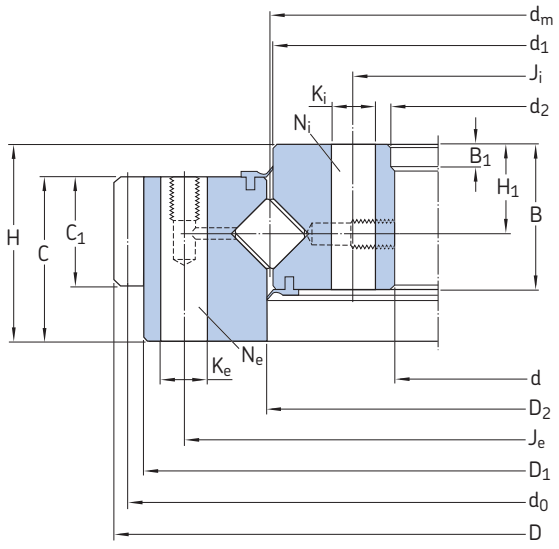

Design 1

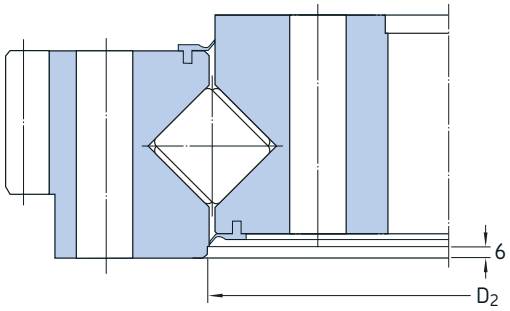

Design 6

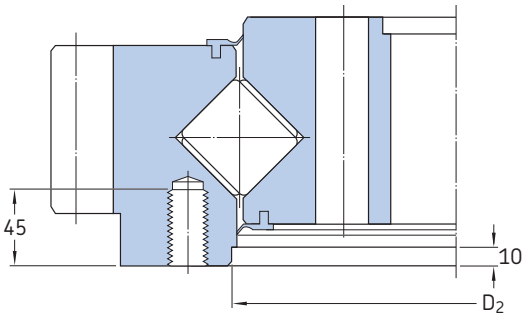

Design 7

Dimensions													**Mass**	**Designation**
Slewing bearing					Outer ring				Inner ring					
d_m	D	d	H	H_1	D_1	D_2	C	C_1	d_1	d_2	B	B_1		
mm					mm				mm				kg	–
1 250	1 475,5	1 080	110	60	1 415	1 252,5	89	75	1 247,5	1 085	100	10	490	**RKS.425060101001**
1 250	1 475,5	1 080	110	60	1 415	1 252,5	89	75	1 247,5	1 085	100	10	480	**RKS.425060201001**
1 250	1 475,5	1 080	110	60	1 415	1 252,5	89	75	1 247,5	1 085	100	10	480	**RKS.425062621001**
1 390	1 604	1 205	130	68,5	1 551	1 394	109	75	1 387,5	1 208	116	10	620	**RKS.427020101001**
1 600	1 804,8	1 430	141	68	1 730	1 608	125	95	1 597,5	1 437	118	10	710	**RKS.427050403001**

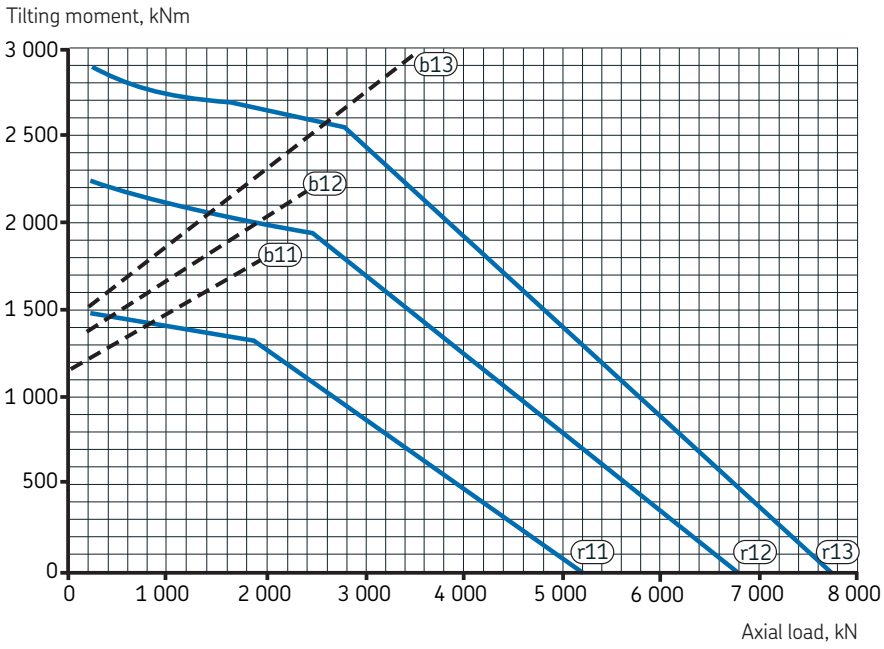

Designation	De-sign	Attachment bolt holes Outer ring			Inner ring			Gear Dimensions					Permissible tooth forces		Basic load ratings axial dynamic	static	Static limiting load diagram Raceway	Bolt
		J_e	K_e	N_e	J_i	K_i	N_i	d_0[1]	m	z	x·m	k·m	$T_{fnormal}$[2]	T_{fmax}	C	C_0	curves	curves
–	–	mm		–	mm		–	mm		–	mm		kN		kN		–	
RKS.425060101001	1	1 350	27	24	1 150	27	28	1 440	10	144	8,6	0,85	92	169	1 220	5 220	r11	b11
RKS.425060201001	1	1 350	27	24	1 150	27	28	1 428	14	102	13,3	3,55	125	229	1 220	5 220	r11	b11
RKS.425062621001	1	1 350	27	48	1 150	27	48	1 428	14	102	13,3	3,55	125	229	1 220	5 220	r11	b11
RKS.427020101001	6	1 500	30	24	1 280	30	40[3]	1 570	10	157	7,5	0,5	93	171	1 730	6 660	r12	b12
RKS.427050403001	7	1 671	M 27	40[3]	1 485	30	42[3]	1 744	16	109	16,912	2,512	239	409	1 840	7 560	r13	b13

[1] Gear pitch circle diameter
[2] Normalized gear teeth; calculated for 3 000 000 operating cycles
[3] Attachment bolt holes not equally spaced

Customized crossed cylindrical roller slewing bearings with an internal gear
d_m **489 – 1 077** mm

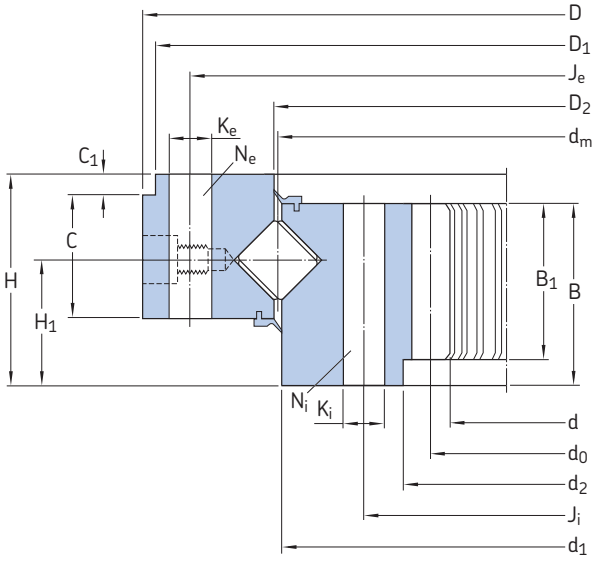

Design 1

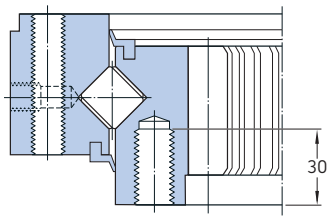

Design 2

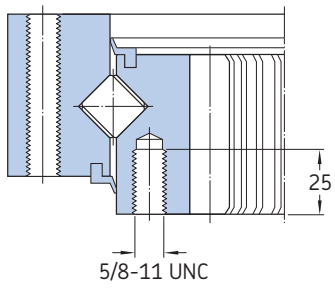

Design 3

Dimensions													Mass	Designation
Slewing bearing					Outer ring				Inner ring					
d_m	D	d	H	H_1	D_1	D_2	C	C_1	d_1	d_2	B	B_1		
mm					mm				mm				kg	–
489	562	384,6	60	30	560	491	50	10	487	418	50	45	42,0	**RKS. 111280101002**
713	825	567,5	90	53	815	715	62	10	711	605	78	67	133	**RKS. 212140106001**
885	972	785,6	82	46	970	887	61	10	883	820	68	60	110	**RKS. 211430101001**
1 075	1 177	965,1	90	47	–	1 077	77	–	1 073	1 010	70	70	155	**RKS. 212600101001**
1 077	1 172	961	90	49	1 165	1079	63	10	1 075	1 010	72	64	182	**RKS. 211440101001**

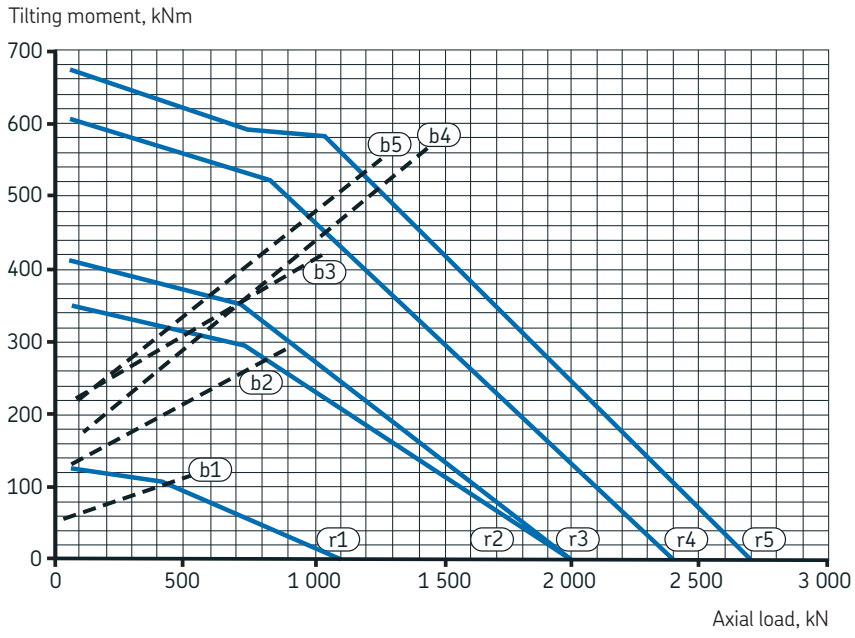

Designation	De-sign	Attachment bolt holes Outer ring			Inner ring			Gear Dimensions					Permissible tooth forces		Basic load ratings axial dynamic	static	Static limiting load diagram Raceway	Bolt
		J_e	K_e	N_e	J_i	K_i	N_i	d_0[1]	m	z	x·m	k·m	$T_{fnormal}$[2]	T_{fmax}	C	C_0	curves	curves
–	–	mm		–	mm		–	mm		–	mm		kN		kN		–	
RKS. 111280101002	1	538	14	30	440	14	30	396	6	66	0	0,3	43	86	314	1 100	r1	b1
RKS. 212140106001	1	785	18	26[3]	640	18	20[3]	574	7	82	3,5	0,25	65	131	516	2 010	r2	b2
RKS. 211430101001	2	944	M 16	36	850	M 16	36	800	8	100	0	0,8	66	133	427	1 980	r3	b3
RKS. 212600101001	3	1 134	M 16	36	1 040	5/8-11	36	955,04	10,16	94	12,7	2,47	107	196	475	2 410	r4	b4
RKS. 211440101001	2	1 134	M 16	36	1 040	M 16	36	980	10	98	0	0,5	111	205	639	2 790	r5	b5

[1] Gear pitch circle diameter
[2] Normalized gear teeth; calculated for 3 000 000 operating cycles
[3] Attachment bolt holes not equally spaced

Customized crossed cylindrical roller slewing bearings with an internal gear
d_m **1 202 – 2 202** mm

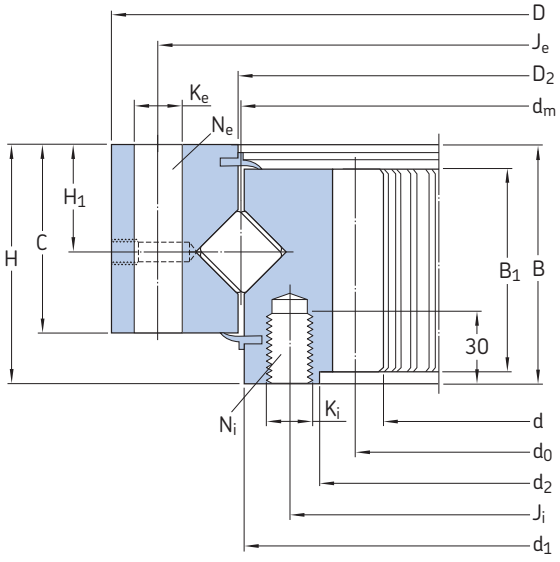

Design 3

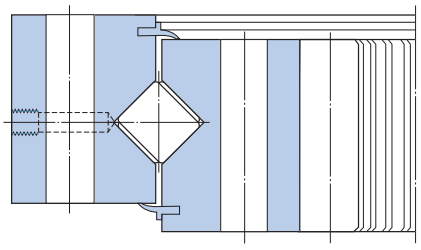

Design 4

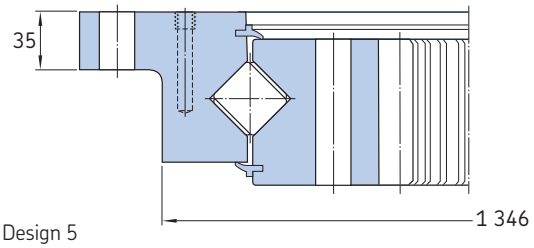

Design 5

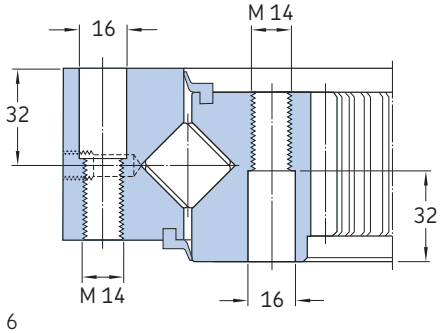

Design 6

Dimensions Slewing bearing					Outer ring		Inner ring				**Mass**	**Designation**
d_m	D	d	H	H_1	D_2	C	d_1	d_2	B	B_1		
mm					mm		mm				kg	–
1 202	1 316	1 082,1	105,5	49,5	1 204	85	1 200	1 128	92,5	91,5	260	**RKS. 312410101001**
1 202	1 316	1 082,1	105,5	49,5	1 204	85	1 200	1 128	92,5	91,5	260	**RKS. 312410102001**
1 202	1 316	1 082	105,5	49,5	1 204	85	1 200	–	92,5	–	260	**RKS. 312290202001**
1 231	1 365	1 038,8	102	51	1 233,25	90	1 228,75	–	90	–	370	**RKS. 313500404001**
1 240	1 447,8	1 038,8	104,65	52,5	1 242,25	92,2	1 237,75	1 086	88,9	87,9	425	**RKS. 314310101001**
1 350	1 495	1 164,8	110	55	1 352,5	93	1347,5	–	95	–	440	**RKS. 413290203001**
2 202	2 290	2 091	70	35	2 205	62	2199	2 115	62	52	290	**RKS. 512080101001**

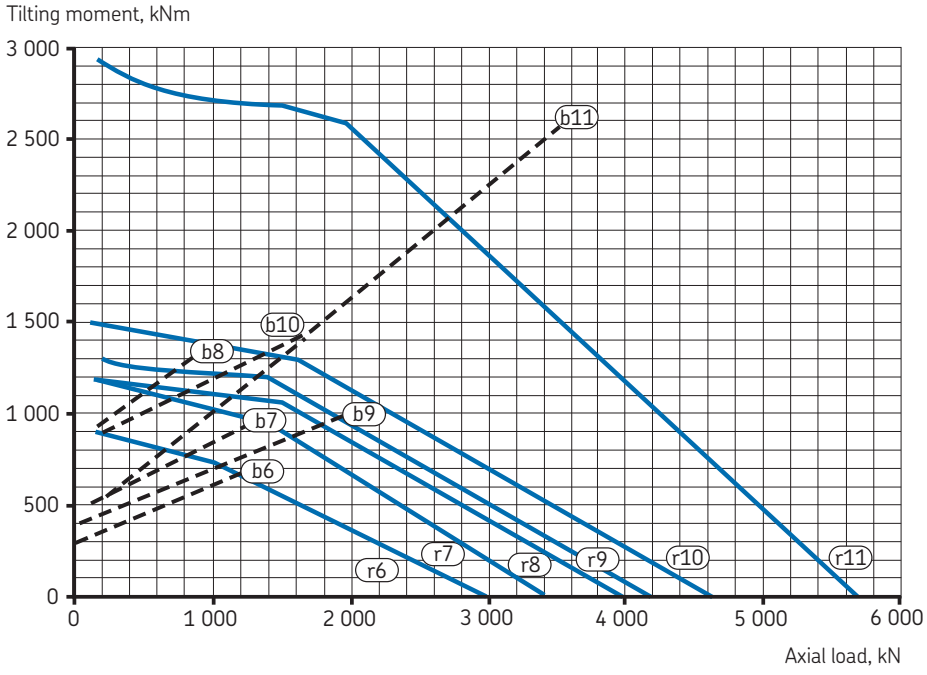

Designation	Design	Attachment bolt holes Outer ring			Inner ring			Gear Dimensions					Permissible tooth forces		Basic load ratings axial dynamic	static	Static limiting load diagram Raceway curves	Bolt curves
		J_e	K_e	N_e	J_i	K_i	N_i	d_0[1]	m	z	x·m	k·m	$T_{fnormal}$[2]	T_{fmax}	C	C_0		
–	–	mm		–	mm		–	mm		–	mm		kN		kN		–	
RKS. 312410101001	3	1 276	22	34[3]	1 157	M 20	36	1 100	10	110	0,666	0,39	169	311	609	2 930	r6	b6
RKS. 312410102001	3	1 276	22	34[3]	1 157	M 20	36	1 100	10	110	0,666	0,39	169	311	609	2 930	r6	b6
RKS. 312290202001	3	1 276	22	36	1 157	M 20	36	1 100	10	110	0	1	125	250	679	3 380	r7	b7
RKS. 313500404001	4	1 312	22	60[3]	1 150	22	60	1 064	14	75	7	1,4	283	486	880	4 190	r8	b8
RKS. 314310101001	5	1 403,35	24	33[3]	1 149,35	24	36	1 054,61	10,16	104	–1,016	2,24	160	294	1 050	4 020	r9	b9
RKS. 413290203001	3	1 442	26	36	1 274	M 24	36	1 190	14	85	0	1,4	231	424	842	4 680	r10	b10
RKS. 512080101001	6	2 262	M 14	36	2 142	M 14	36	2 100	5	420	0	0,5	31	61	838	5 680	r11	b11

[1] Gear pitch circle diameter
[2] Normalized gear teeth; calculated for 3 000 000 operating cycles
[3] Attachment bolt holes not equally spaced

Customized crossed cylindrical roller slewing bearings without a gear
d_m **310 – 980** mm

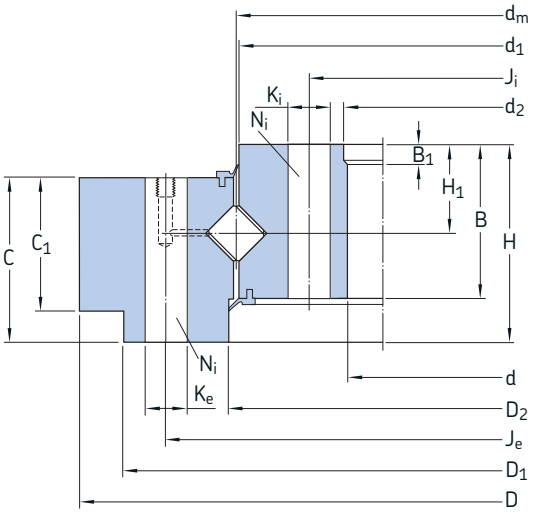

Design 1

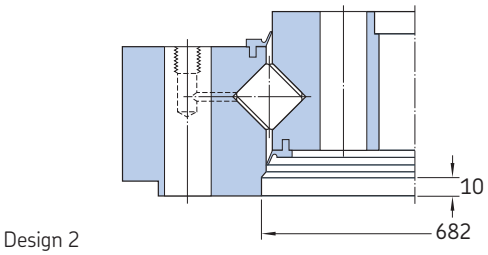

Design 2

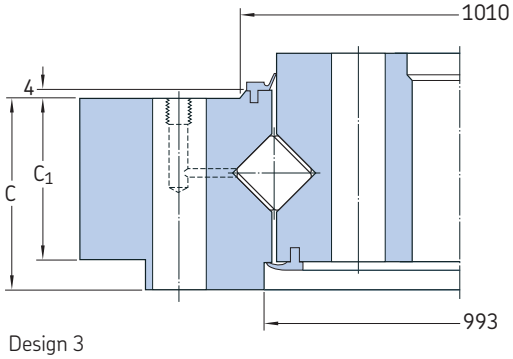

Design 3

Dimensions													**Mass**	**Designation**
Slewing bearing					Outer ring				Inner ring					
d_m	D	d	H	H_1	D_1	D_2	C	C_1	d_1	d_2	B	B_1		
mm					mm				mm				kg	–
310	403,5	233	55	28	379	312	43	37	308	235	45	10	25,0	**RKS.921155203001**
474	589,5	378	75	37	567	476	60	40	472	384	58	10	64,0	**RKS.121405202001**
574	695	477	77	35	671	576	64	42	572	480	57	9	84,0	**RKS.121395101002**
675	816	571	90	42	781	677	73	65	673	574	67	10	125	**RKS.122295101002**
823	979	715	100	47	935	825	83	67	821	718	84	10	195	**RKS.223475101001**
980	1 144	868	100	50	1 088	982	81	68	978	870	88	10	230	**RKS.222605101001**

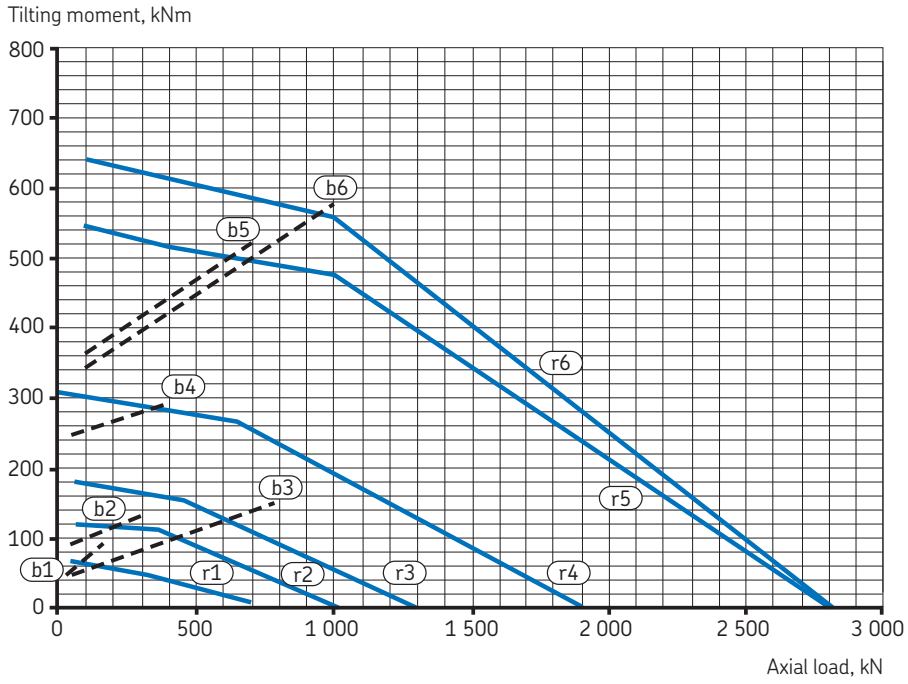

Designation	De-sign	Attachment bolt holes Outer ring			Inner ring			Basic load ratings axial		Static limiting load diagram	
		J_e	K_e	N_e	J_i	K_i	N_i	dynamic C	static C_0	Raceway curves	Bolt curves
–	–	mm		–	mm		–	kN		–	
RKS.921155203001	1	358	13	24	259	13	28	245	697	r1	b1
RKS.121405202001	1	540	16	36	410	16	36	304	1 050	r2	b2
RKS.121395101002	1	640	18	36	508	18	36	339	1 280	r3	b3
RKS.122295101002	2	753	22	36	604	22	36	495	1 880	r4	b4
RKS.223475101001	1	893	22	36	753	22	36	709	2 790	r5	b5
RKS.222605101001	3	1 050	22	28[1)]	910	22	26[1)]	607	2 740	r6	b6

[1)] Attachment bolt holes not equally spaced

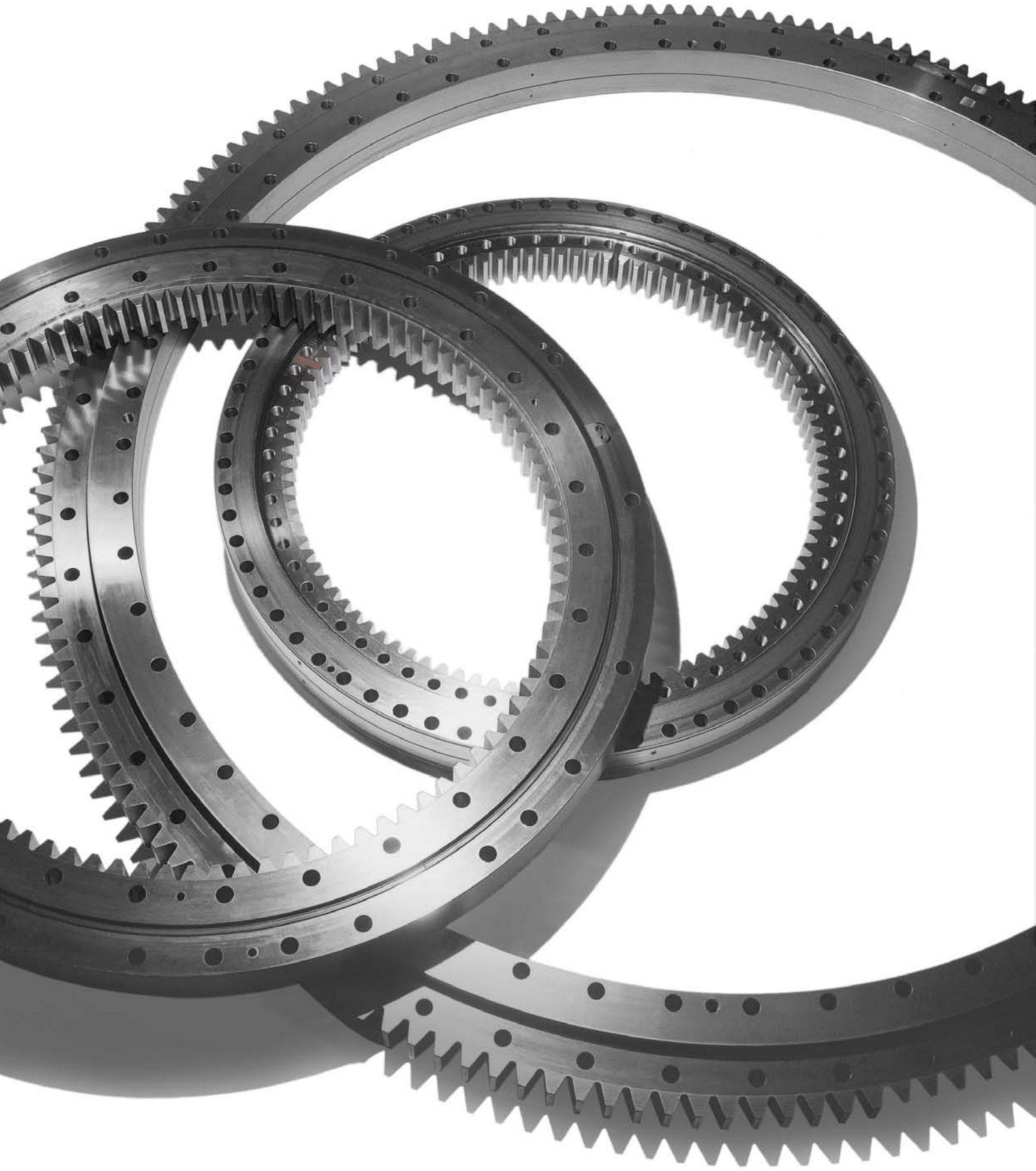

Product index

The product range listed in this catalogue includes about 140 single row four-point contact ball slewing bearings and single row crossed cylindrical roller slewing bearings. In order to enable the user to quickly find the technical data for a product known only by its designation, the products are listed by designation in alphanumerical order in this index. Each entry lists the page number on which the product can be found and gives a brief description of the product.

Designation	Product	Page
RKS.060.20.0414	Medium size four-point contact ball slewing bearing without a gear	74
RKS.060.20.0544	Medium size four-point contact ball slewing bearing without a gear	74
RKS.060.20.0644	Medium size four-point contact ball slewing bearing without a gear	74
RKS.060.20.0744	Medium size four-point contact ball slewing bearing without a gear	74
RKS.060.20.0844	Medium size four-point contact ball slewing bearing without a gear	74
RKS.060.20.0944	Medium size four-point contact ball slewing bearing without a gear	74
RKS.060.20.1094	Medium size four-point contact ball slewing bearing without a gear	74
RKS.060.25.1204	Medium size four-point contact ball slewing bearing without a gear	76
RKS.060.25.1314	Medium size four-point contact ball slewing bearing without a gear	76
RKS.060.25.1424	Medium size four-point contact ball slewing bearing without a gear	76
RKS.060.25.1534	Medium size four-point contact ball slewing bearing without a gear	76
RKS.060.25.1644	Medium size four-point contact ball slewing bearing without a gear	76
RKS.060.25.1754	Medium size four-point contact ball slewing bearing without a gear	76
RKS.060.30.1904	Medium size four-point contact ball slewing bearing without a gear	76
RKS.061.20.0414	Medium size four-point contact ball slewing bearing with an external gear	66
RKS.061.20.0544	Medium size four-point contact ball slewing bearing with an external gear	66
RKS.061.20.0644	Medium size four-point contact ball slewing bearing with an external gear	66
RKS.061.20.0744	Medium size four-point contact ball slewing bearing with an external gear	66
RKS.061.20.0844	Medium size four-point contact ball slewing bearing with an external gear	66
RKS.061.20.0944	Medium size four-point contact ball slewing bearing with an external gear	66
RKS.061.20.1094	Medium size four-point contact ball slewing bearing with an external gear	66
RKS.061.25.1204	Medium size four-point contact ball slewing bearing with an external gear	68
RKS.061.25.1314	Medium size four-point contact ball slewing bearing with an external gear	68
RKS.061.25.1424	Medium size four-point contact ball slewing bearing with an external gear	68
RKS.061.25.1534	Medium size four-point contact ball slewing bearing with an external gear	68
RKS.061.25.1644	Medium size four-point contact ball slewing bearing with an external gear	68
RKS.061.25.1754	Medium size four-point contact ball slewing bearing with an external gear	68
RKS.061.30.1904	Medium size four-point contact ball slewing bearing with an external gear	68
RKS.062.20.0414	Medium size four-point contact ball slewing bearing with an internal gear	70
RKS.062.20.0544	Medium size four-point contact ball slewing bearing with an internal gear	70
RKS.062.20.0644	Medium size four-point contact ball slewing bearing with an internal gear	70
RKS.062.20.0744	Medium size four-point contact ball slewing bearing with an internal gear	70
RKS.062.20.0844	Medium size four-point contact ball slewing bearing with an internal gear	70
RKS.062.20.0944	Medium size four-point contact ball slewing bearing with an internal gear	70
RKS.062.20.1094	Medium size four-point contact ball slewing bearing with an internal gear	70
RKS.062.25.1204	Medium size four-point contact ball slewing bearing with an internal gear	72
RKS.062.25.1314	Medium size four-point contact ball slewing bearing with an internal gear	72
RKS.062.25.1424	Medium size four-point contact ball slewing bearing with an internal gear	72
RKS.062.25.1534	Medium size four-point contact ball slewing bearing with an internal gear	72
RKS.062.25.1644	Medium size four-point contact ball slewing bearing with an internal gear	72
RKS.062.25.1754	Medium size four-point contact ball slewing bearing with an internal gear	72
RKS.062.30.1904	Medium size four-point contact ball slewing bearing with an internal gear	72
RKS.11128 0101 002	Customized crossed cylindrical roller slewing bearing with an internal gear	108
RKS.12139 0101 002	Customized crossed cylindrical roller slewing bearing with an external gear	102
RKS.12139 5101 002	Customized crossed cylindrical roller slewing bearing without a gear	112
RKS.12140 0202 001	Customized crossed cylindrical roller slewing bearing with an external gear	102
RKS.12140 5202 001	Customized crossed cylindrical roller slewing bearing without a gear	112
RKS.12229 0101 002	Customized crossed cylindrical roller slewing bearing with an external gear	102
RKS.12229 5101 002	Customized crossed cylindrical roller slewing bearing without a gear	112

Designation	Product	Page
RKS.160.14.0414	Medium size crossed cylindrical roller slewing bearing without a gear	98
RKS.160.14.0544	Medium size crossed cylindrical roller slewing bearing without a gear	98
RKS.160.14.0644	Medium size crossed cylindrical roller slewing bearing without a gear	98
RKS.160.14.0744	Medium size crossed cylindrical roller slewing bearing without a gear	98
RKS.160.14.0844	Medium size crossed cylindrical roller slewing bearing without a gear	98
RKS.160.14.0944	Medium size crossed cylindrical roller slewing bearing without a gear	98
RKS.160.14.1094	Medium size crossed cylindrical roller slewing bearing without a gear	98
RKS.160.16.1204	Medium size crossed cylindrical roller slewing bearing without a gear	100
RKS.160.16.1314	Medium size crossed cylindrical roller slewing bearing without a gear	100
RKS.160.16.1424	Medium size crossed cylindrical roller slewing bearing without a gear	100
RKS.160.16.1534	Medium size crossed cylindrical roller slewing bearing without a gear	100
RKS.160.16.1644	Medium size crossed cylindrical roller slewing bearing without a gear	100
RKS.160.16.1754	Medium size crossed cylindrical roller slewing bearing without a gear	100
RKS.160.20.1904	Medium size crossed cylindrical roller slewing bearing without a gear	100
RKS.161.14.0414	Medium size crossed cylindrical roller slewing bearing with an external gear	90
RKS.161.14.0544	Medium size crossed cylindrical roller slewing bearing with an external gear	90
RKS.161.14.0644	Medium size crossed cylindrical roller slewing bearing with an external gear	90
RKS.161.14.0744	Medium size crossed cylindrical roller slewing bearing with an external gear	90
RKS.161.14.0844	Medium size crossed cylindrical roller slewing bearing with an external gear	90
RKS.161.14.0944	Medium size crossed cylindrical roller slewing bearing with an external gear	90
RKS.161.14.1094	Medium size crossed cylindrical roller slewing bearing with an external gear	90
RKS.161.16.1204	Medium size crossed cylindrical roller slewing bearing with an external gear	92
RKS.161.16.1314	Medium size crossed cylindrical roller slewing bearing with an external gear	92
RKS.161.16.1424	Medium size crossed cylindrical roller slewing bearing with an external gear	92
RKS.161.16.1534	Medium size crossed cylindrical roller slewing bearing with an external gear	92
RKS.161.16.1644	Medium size crossed cylindrical roller slewing bearing with an external gear	92
RKS.161.16.1754	Medium size crossed cylindrical roller slewing bearing with an external gear	92
RKS.161.20.1904	Medium size crossed cylindrical roller slewing bearing with an external gear	92
RKS.162.14.0414	Medium size crossed cylindrical roller slewing bearing with an internal gear	94
RKS.162.14.0544	Medium size crossed cylindrical roller slewing bearing with an internal gear	94
RKS.162.14.0644	Medium size crossed cylindrical roller slewing bearing with an internal gear	94
RKS.162.14.0744	Medium size crossed cylindrical roller slewing bearing with an internal gear	94
RKS.162.14.0844	Medium size crossed cylindrical roller slewing bearing with an internal gear	94
RKS.162.14.0944	Medium size crossed cylindrical roller slewing bearing with an internal gear	94
RKS.162.14.1094	Medium size crossed cylindrical roller slewing bearing with an internal gear	94
RKS.162.16.1204	Medium size crossed cylindrical roller slewing bearing with an internal gear	94
RKS.162.16.1314	Medium size crossed cylindrical roller slewing bearing with an internal gear	94
RKS.162.16.1424	Medium size crossed cylindrical roller slewing bearing with an internal gear	94
RKS.162.16.1534	Medium size crossed cylindrical roller slewing bearing with an internal gear	94
RKS.162.16.1644	Medium size crossed cylindrical roller slewing bearing with an internal gear	94
RKS.162.16.1754	Medium size crossed cylindrical roller slewing bearing with an internal gear	94
RKS.162.20.1904	Medium size crossed cylindrical roller slewing bearing with an internal gear	94
RKS.204040101001	Customized four-point contact ball slewing bearings with an external gear	80
RKS.21 0411	Light series four-point contact ball slewing bearing with an external gear	60
RKS.21 0541	Light series four-point contact ball slewing bearing with an external gear	60
RKS.21 0641	Light series four-point contact ball slewing bearing with an external gear	60
RKS.21 0741	Light series four-point contact ball slewing bearing with an external gear	60
RKS.21 0841	Light series four-point contact ball slewing bearing with an external gear	60
RKS.21 0941	Light series four-point contact ball slewing bearing with an external gear	60
RKS.21 1091	Light series four-point contact ball slewing bearing with an external gear	60
RKS.211430101001	Customized crossed cylindrical roller slewing bearing with an internal gear	108
RKS.211440101001	Customized crossed cylindrical roller slewing bearing with an internal gear	108
RKS.212140106001	Customized crossed cylindrical roller slewing bearing with an internal gear	108
RKS.212600101001	Customized crossed cylindrical roller slewing bearing with an internal gear	108
RKS.22 0411	Light series four-point contact ball slewing bearing with an internal gear	62
RKS.22 0541	Light series four-point contact ball slewing bearing with an internal gear	62
RKS.22 0641	Light series four-point contact ball slewing bearing with an internal gear	62
RKS.22 0741	Light series four-point contact ball slewing bearing with an internal gear	62
RKS.22 0841	Light series four-point contact ball slewing bearing with an internal gear	62
RKS.22 0941	Light series four-point contact ball slewing bearing with an internal gear	62
RKS.22 1091	Light series four-point contact ball slewing bearing with an internal gear	62
RKS.221300101001	Customized crossed cylindrical roller slewing bearing with an external gear	104
RKS.221310101001	Customized crossed cylindrical roller slewing bearing with an external gear	104
RKS.222500101001	Customized crossed cylindrical roller slewing bearing with an external gear	104
RKS.222600101001	Customized crossed cylindrical roller slewing bearing with an external gear	104

Designation	Product	Page
RKS.222605101001	Customized crossed cylindrical roller slewing bearing without a gear	112
RKS.223475101001	Customized crossed cylindrical roller slewing bearing without a gear	112
RKS.23 0411	Light series four-point contact ball slewing bearing without a gear	64
RKS.23 0541	Light series four-point contact ball slewing bearing without a gear	64
RKS.23 0641	Light series four-point contact ball slewing bearing without a gear	64
RKS.23 0741	Light series four-point contact ball slewing bearing without a gear	64
RKS.23 0841	Light series four-point contact ball slewing bearing without a gear	64
RKS.23 0941	Light series four-point contact ball slewing bearing without a gear	64
RKS.23 1091	Light series four-point contact ball slewing bearing without a gear	64
RKS.302070202001	Customized four-point contact ball slewing bearing with an external gear	80
RKS.312290202001	Customized crossed cylindrical roller slewing bearing with an internal gear	110
RKS.312410101001	Customized crossed cylindrical roller slewing bearing with an internal gear	110
RKS.312410102001	Customized crossed cylindrical roller slewing bearing with an internal gear	110
RKS.313500404001	Customized crossed cylindrical roller slewing bearing with an internal gear	110
RKS.314310101001	Customized crossed cylindrical roller slewing bearing with an internal gear	110
RKS.322300101001	Customized crossed cylindrical roller slewing bearing with an external gear	104
RKS.324012324001	Customized crossed cylindrical roller slewing bearing with an external gear	104
RKS.413290203001	Customized crossed cylindrical roller slewing bearing with an internal gear	112
RKS.425060101001	Customized crossed cylindrical roller slewing bearing with an external gear	108
RKS.425060201001	Customized crossed cylindrical roller slewing bearing with an external gear	108
RKS.425060621001	Customized crossed cylindrical roller slewing bearing with an external gear	108
RKS.427020101001	Customized crossed cylindrical roller slewing bearing with an external gear	108
RKS.427050403001	Customized crossed cylindrical roller slewing bearing with an external gear	108
RKS.512080101001	Customized crossed cylindrical roller slewing bearing with an internal gear	110
RKS.900155101001	Customized four-point contact ball slewing bearing without a gear	82
RKS.901175101001	Customized four-point contact ball slewing bearing without a gear	80
RKS.921150303001	Customized crossed cylindrical roller slewing bearing with an external gear	102
RKS.921155203001	Customized crossed cylindrical roller slewing bearing without a gear	112
RKS.951145101001	Customized four-point contact ball slewing bearing without a gear	82

® SKF and HYDROCAM are registered trademarks of the SKF Group.

© SKF Group 2015
The contents of this publication are the copyright of the publisher and may not be reproduced (even extracts) unless prior written permission is granted. Every care has been taken to ensure the accuracy of the information contained in this publication but no liability can be accepted for any loss or damage whether direct, indirect or consequential arising out of the use of the information contained herein.

PUB BU/P2 06115/2 EN · January 2015

