Miniature profile rail guides



Contents

3 Technical data
4 Application examples
5 Product features
6 Accuracy
7 Load carrying capacity
8 Order designations
9 Mounting details
10 Lubrication
11 Carriage dimensions
12 Accessories
12 Rail dimensions
13 LZM miniatures slides
15 Special designs (customisation)

The SKF® brand now stands for more than ever before, and means more to you as a valued customer.

While SKF maintains its leadership as the hallmark of quality bearings throughout the world, new dimensions in technical advances, product support and services have evolved SKF into a truly solutions-oriented supplier, creating greater value for customers.

These solutions encompass ways to bring greater productivity to customers, not only with breakthrough application-specific products, but also through leading-edge design simulation tools and consultancy services, plant asset efficiency maintenance programmes, and the industry's most advanced supply management techniques.

The SKF brand still stands for the very best in rolling bearings, but it now stands for much more.

SKF – the knowledge engineering company

Technical data

In response to the market trend for increased performance with a minimum of mounting space, SKF has extended its product range by a miniature profile rail guide.

The close cooperation with numerous customers combined with SKF's experience has resulted in a miniature rail guide design that sets new standards.

SKF offers its customers an excellent technical advisory service on the spot as well as a vast modular range for the performance increase of machines and installations.

In total SKF offers seven rail sizes and fourteen different types of carriages.

Miniature profile rails are universally applicable and preferably used in automation technology, electronics production, medical engineering and the pneumatic industry (see Application examples, page 4).

Types of rails, carriages and systems

Size		LLMHS_TA Standard	LLMHS_LA Standard, long	LLMWS_TA Wide	LLMWS_LA Wide, long
7	Rail	LLMHR 7	LLMHR 7	-	-
	Carrier	LLMHC 7 TA	LLMHC 7 LA	-	-
	System	LLMHS 7 TA	LLMHS 7 LA	-	-
9	Rail	LLMHR 9	LLMHR 9	LLMWR 9	LLMWR 9
	Carrier	LLMHC 9 TA	LLMHC 9 LA	LLMWC 9 TA	LLMWC 9 LA
	System	LLMHS 9 TA	LLMHS 9 LA	LLMWS 9 TA	LLMWS 9 LA
12	Rail	LLMHR 12	LLMHR 12	LLMWR 12	LLMWR 12
	Carrier	LLMHC 12 TA	LLMHC 12 LA	LLMWC 12 TA	LLMWC 12 LA
	System	LLMHS 12 TA	LLMHS 12 LA	LLMWS 12 TA	LLMWS 12 LA
15	Rail	LLMHR 15	LLMHR 15	LLMWR 15	LLMWR 15
	Carrier	LLMHC 15 TA	LLMHC 15 LA	LLMWC 15 TA	LLMWC 15 LA
	System	LLMHS 15 TA	LLMHS 15 LA	LLMWS 15 TA	LLMWS 15 LA

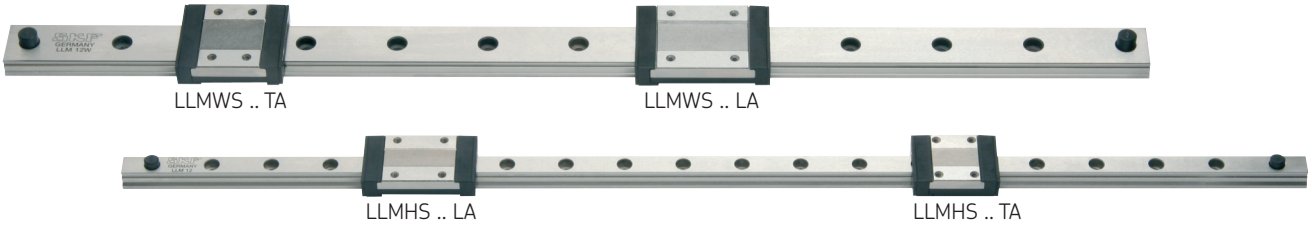

LLMWS .. TA

LLMWS .. LA

LLMHS .. LA

LLMHS .. TA

Technical data

Structure:
Four-point contact ball recirculation system with identical load angles and 2 ball recirculation paths per carriage for unlimited stroke

Range:
Four different types (7, 9, 12, 15) comprising different widths and carriage lengths

Rail material:
Stainless steel 1.4034 or equivalent

Carriage material:
Stainless steel 1.4034 or equivalent with return zones of POM

Ball material:
Stainless steel 1.3541

Sealing material:
Elastolan

Temperature range:
from –20 °C up to +80 °C

Speed:
up to 3 m/s max.

Acceleration:
up to 80 m/s^2 max.

Accuracy:
2 accuracy classes (P5, P1)

Stiffness:
3 standard preload classes (T0, T1, T2)

Application examples

Electronics
PCB drilling and routing machine

A flat-format and weight-saving design enables small machine dimensions. High power density results in shorter processing times.

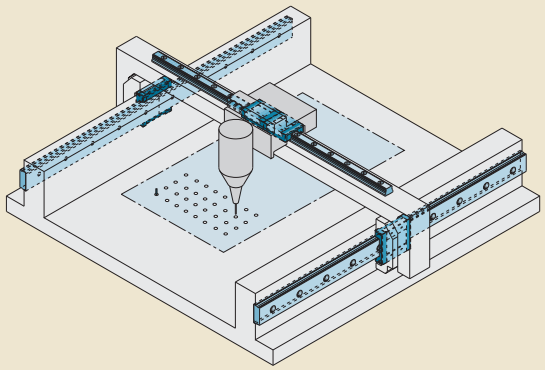

Automation technology
Pick-and-place manipulators

A low-mass guidance system coupled with aluminium profiles permits faster sequences of motion and higher cycle rates.

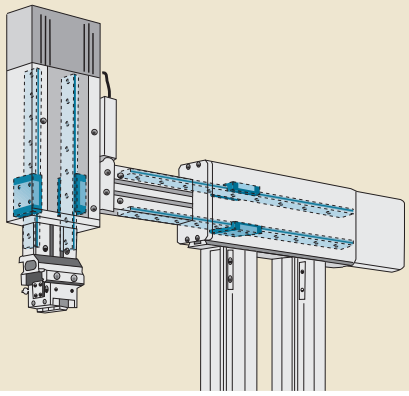

Medical equipment
Optical instruments

Ease of movement and corrosion-resistant materials ensure reliability in everyday use.

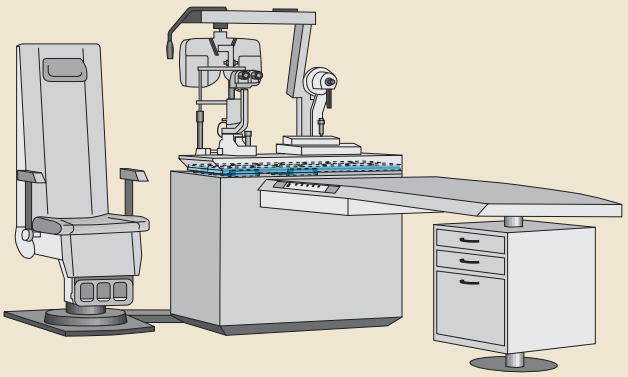

Pneumatic industry
Compact piston rod cylinder

High rigidity and load carrying capacity designed for long service life in "short stroke applications" (typical for pneumatic applications).

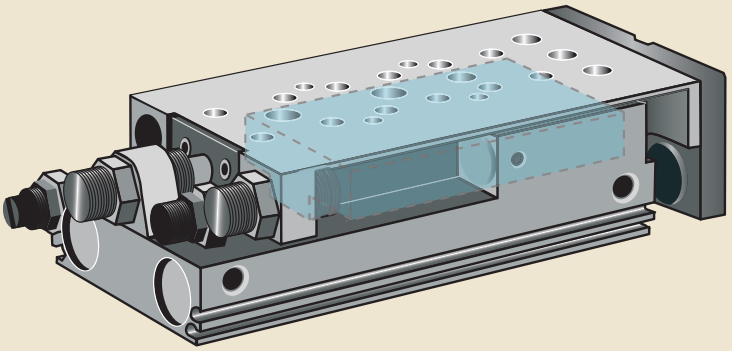

Product features

Maximum utilisation of mounting space
The compact design of the SKF miniature profile rail guides permits maximum performance on a minimum of mounting space. Dimensions and weights of machines and installations can be further reduced.

Performance
For improved machinery performance, maximum speeds and accelerations under loads acting in all directions are possible. This permits more efficient processes and the reduction of cycle times.

Reliability
More than 90 years of SKF experience with rolling bearing geometry guarantee long product life. Maintenance intervals are extended and the service life of machines and installations is increased.

Resistance
The use of stainless steel in combination with plastic components makes these guides universally applicable. The reliability in application engineering is increased and risks are eliminated.

Rails
The rails are ground on all faces. The maximum rail lengths per piece are shown in the table opposite. SKF supplies the rails in lengths according to customer requirements. The distance measurement E (see Illustration page 11) is manufactured symmetrically, depending on the rail length.

Upon request, SKF can also supply special rails to customer drawings.

Rail designation	Maximum rail lenght per piece*
LLMHR 7	1 000 mm
LLMHR 9 / LLMWR 9	1 000 mm
LLMHR 12 / LLMWR 12	1 000 mm
LLMHR 15 / LLMWR 15	1 000 mm

*For rail length > 1 000 mm, please contact SKF.

Carriages
A wide range of 14 different types of carriages, each available in three preload classes and with a choice between sealed and open types, permits optimum system designs tailored to the respective requirement profile.

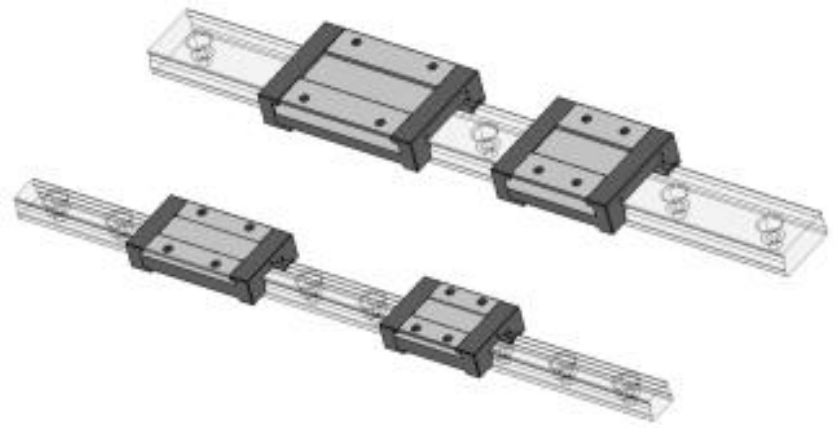

Preload and stiffness
The determination of an appropriate preload renders the miniature profile rail guide suitable for widely varying operating conditions and changes the stiffness of the overall system.
SKF recommends clearance-free systems (T0) for applications with constant load and low friction. For applications characterised by shock loads, vibration and alternating loads or torques, it is advisable to select a preloaded system (T1) and a (T2) system should be chosen for high torques and high stiffness.

Preload class	Characteristics
T0	Clearance
T1	Light clearance up to light preload
T2	Preloaded system

further preload classes upon request

Accuracy

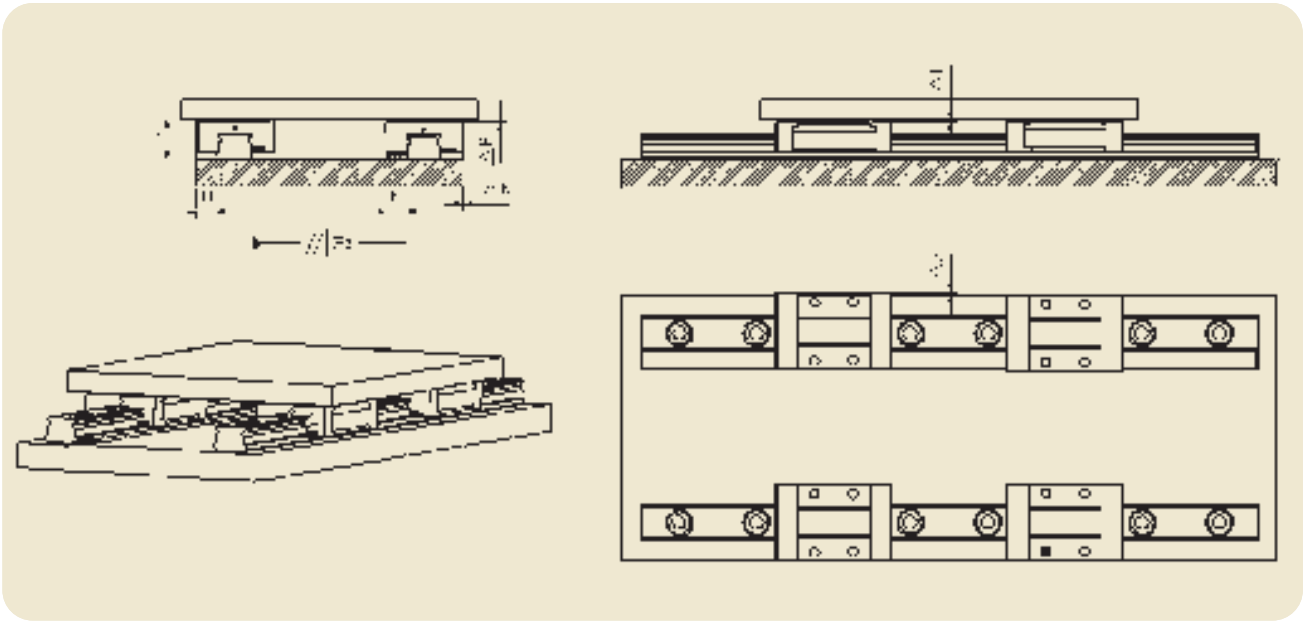

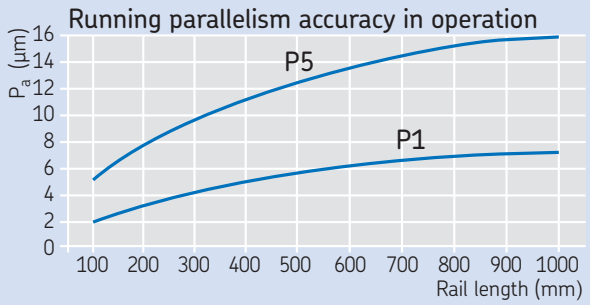

Dimension tolerances

	H (mm)	N (mm)
P1	±0,010	±0,015
P5	±0,020	±0,025

The tolerances apply over the entire guide length for any combination of carriage and rail.

Maximum tolerance for paired systems or carriages at identical rail position

	ΔH (mm)	ΔN (mm)
P1	0,007	0,007
P5	0,015	0,015

The dimensions ΔH and ΔN relate to the ideal centre of the carriage. Each dimension is derived from the mean value of two measured points with identical centre distance.

Distance tolerance

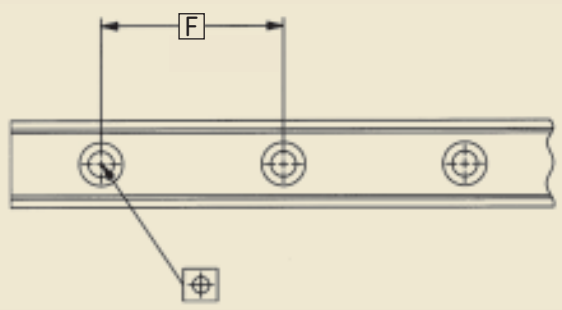

Position tolerance of rail attachment holes

⌖ ∅ 0,3

Load carrying capacity

Static load rating C_0

The static load rating C_0 is the load which corresponds to an arithmetical Hertzian Pressure of 4 200 MPa between raceway and balls. This pressure produces a permanent deformation of approximately 0,0001 of the ball diameter.

Static moments "M_A, M_B, M_C"

The permissible static moments correspond to a moment load that produces the same permanent deformation as in the static load rating C_0.

Load direction

SKF miniature profile rail guides are designed to accommodate loads in all directions.

Dynamic load rating C

The dynamic load rating C is the constant load which gives a theoretical system life of 100 000 m of travel with a certainty of 90 %.

Life calculation

The life of a profile rail guide is defined as the total linear distance travelled before the appearance of the first signs of material fatigue on the raceways or rolling elements. Both in laboratory trials and in practice it is found that the life of apparently similar rail guides under completely identical operating conditions can differ. Calculation of the requisite bearing size therefore requires a clear statistic definition of the term bearing life. All references to dynamic load rating of profile rail guides apply to the basic rating life as covered by the ISO definition, in which life is understood as that operating period reached or exceeded by 90 % of a large group of identical bearings. The SKF life calculation is based on 100 000 metres of travel. Other calculation models assume merely 50 000 metres of travel. In such cases, the dynamic load ratings must be divided by a factor of 1,26 to ensure comparability with the SKF values.

Where the stroke length and frequency are constant it is often easier to calculate the basic rating life in hours of operation using the equation:

$$L_{10} = \left(\frac{C}{P}\right)^3$$

L_{10} = basic rating life, 10^5 m
C = dynamic load rating, N
P = equivalent dynamic bearing load, N

$$L_{10\,h} = \frac{50\,000\,000}{s \cdot n \cdot 60}\left(\frac{C}{P}\right)^3$$

$L_{10\,h}$ = basic rating life, hours of operation
s = stroke, mm
n = frequency of stroke, min^{-1} (number of movements from one end position to the other end and back again)

Permissible operating conditions

Permissible maximum load
DIN 636, Part 2, stipulates that the calculation of bearing life is valid only when the equivalent dynamic loading of a profile rail guide does not exceed 0,5 C. Any higher loading leads to an imbalance of stress distribution which can have a negative effect on bearing life. Where such conditions prevail, the user should turn to SKF for recommendations and advice on bearing life calculation.

Requisite minimum load
In order to assure slip-free running of profile rail guides, they must be subjected to a certain minimum load. The general guideline is a minimum value of P = 0,001 C. The minimum load is of special importance in profile rail guides which operate at high speed or with high acceleration. In such cases, the inertia forces of the balls as well as the rolling friction in the lubricant can have an adverse effect on the rolling conditions in the guide and can lead to damaging slip conditions between the balls and raceways.

Order designation

The following designation system should be used for inquiries and orders.

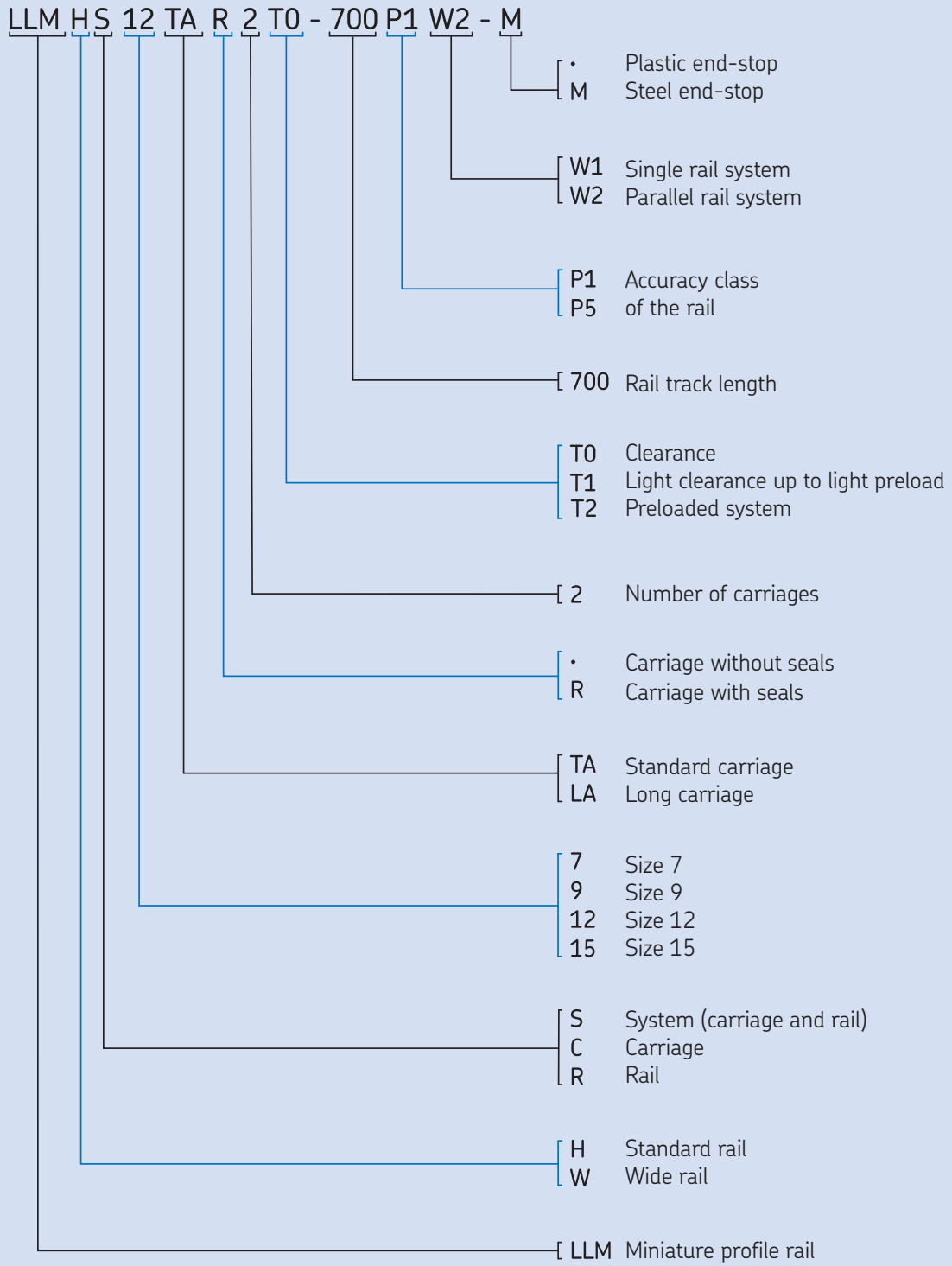

Mounting details

Permissible height deviation in transverse direction H_a

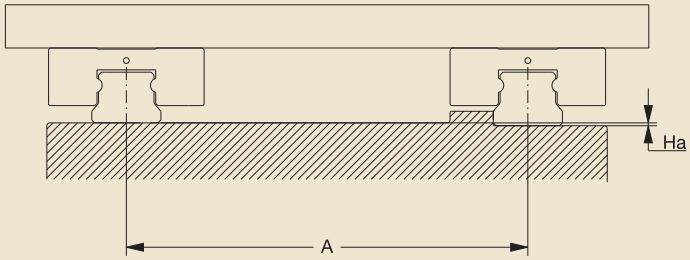

$$H_a = A \cdot Z$$

H_a = permissible height deviation (mm)
A = distance of rails (mm)
Z = calculation factor T_0 $3{,}0 \cdot 10^{-4}$
T_1/T_2 $1{,}5 \cdot 10^{-4}$

Permissible height deviation in longitudinal direction H_b

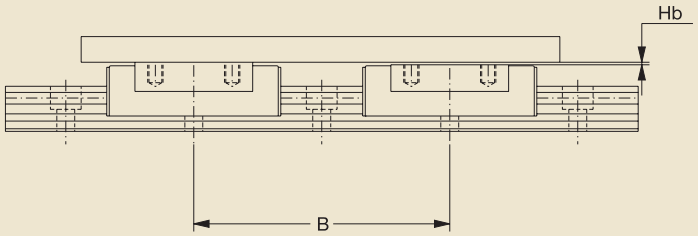

$$H_b = B \cdot 7 \cdot 10^{-5}$$

H_b = permissible height deviation (mm)
B = distance of carriages (mm)

Ideal mounting arrangement

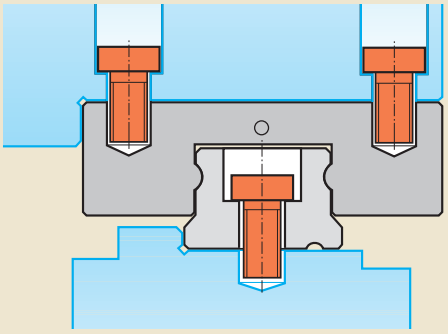

The illustration opposite shows the ideal mounting arrangement for miniature profile rail guides. Carriage and rail can be mounted at both sides, but their datum planes should be on the same side of the system. To ensure a neat abutment to the adjacent edges, these should feature a relief fillet.

Tightening torque of fixing bolts

Thread size	Maximum tightening torque Ncm
M 2	32
M 3	110
M 4	260
M 5	510

The opposite table shows the maximum tightening torques for fixing bolts depending on the thread size.

Lubrication

The relubrication intervals depend on the environmental conditions and the magnitude and type of load!

As the manufacturer is not familiar with the respective individual operating conditions, only tests carried out by the user or close observation can provide certainty about the appropriate relubrication intervals.

SKF miniature profile rails are pregreased and are thus ready for use when delivered. The individual carriages can be relubricated through lubrication holes at the faces. Here, the relubrication intervals depend on the distance travelled as well as the cycles and environmental conditions.

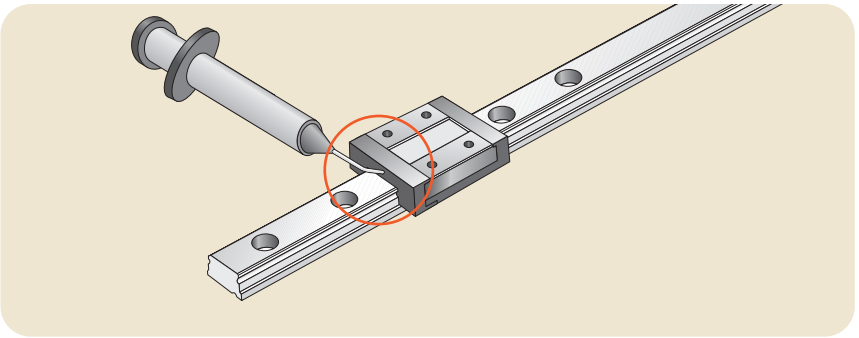

Order designation	Size	
VM LLM 12	Standard 7, 9, 12,	Wide series 9 W, 12 W
VM LLM 15	15	15W

Carriages
Mounting and dismounting

For dismounting the system premounted by SKF, please observe the following instructions:

- Remove the end-stop Ⓑ from the rail.
- Position side ① of the mounting rail Ⓐ to the rail ② so that there is no misalignment or gap between rail and mounting rail.
- Slide the carriage Ⓒ from the rail to the mounting rail and keep both rails in position while doing so.

For mounting the carriage onto the rail, please proceed in reverse order.

Attention: Please always use the enclosed mounting rail as the ball retention inside the carriage is not guaranteed otherwise.

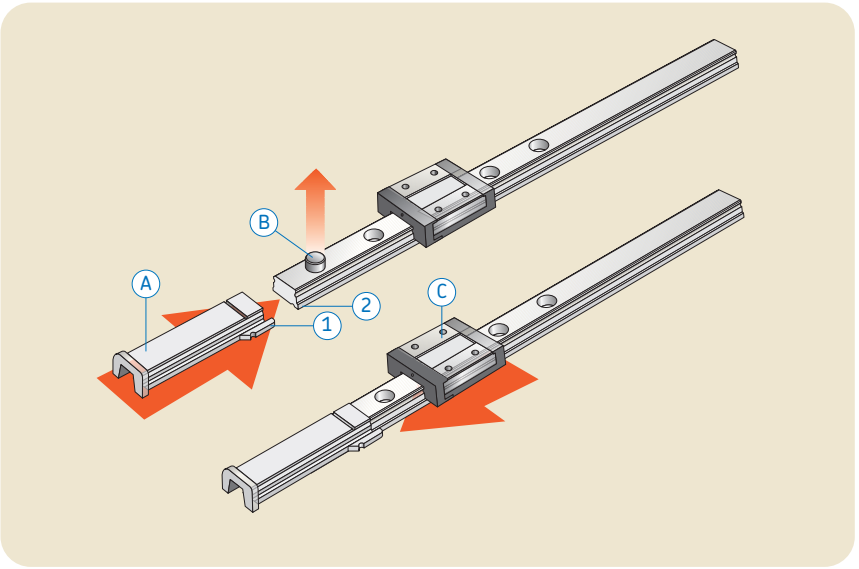

Carriage dimensions

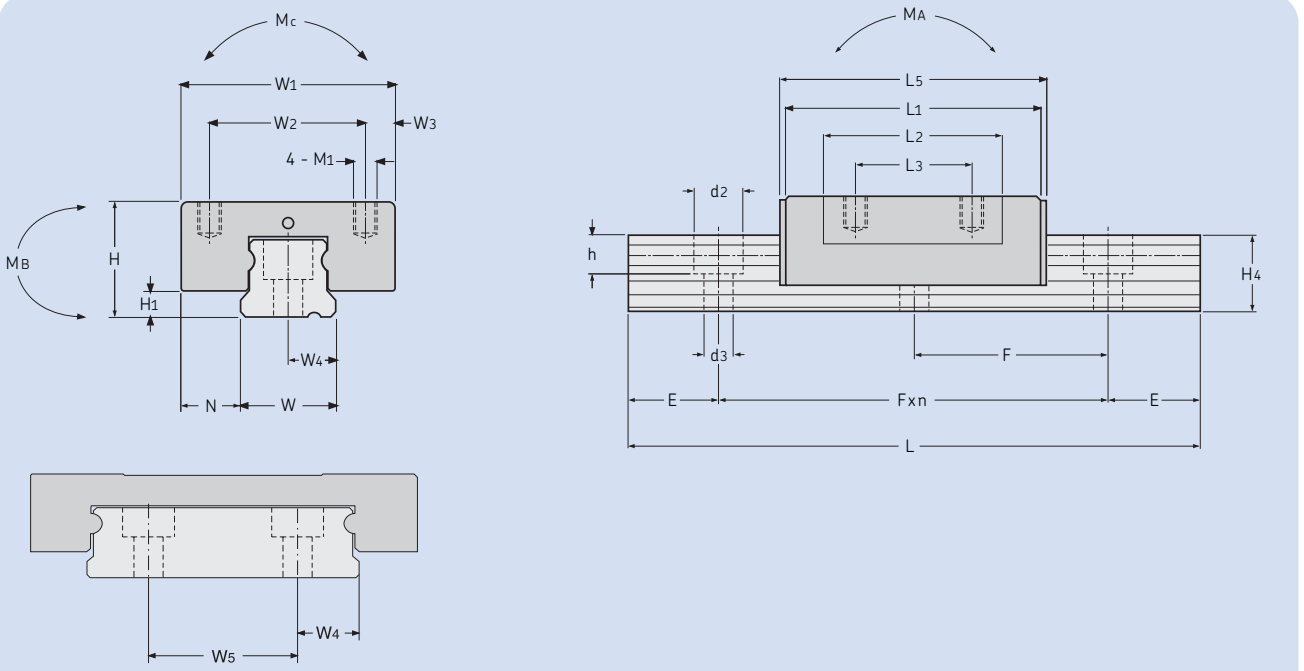

LLMWS 15 design

Carriage dimensions

Designation	H (mm)	W_1 (mm)	W_3 (mm)	W_2 (mm)	L_1 (mm)	L_2 (mm)	L_3 (mm)	L_5 (mm)	M_1 (mm)	H_1 (mm)	Weight (kg)
LLMHS 7 TA LLMHS 7 LA	8	17	2,5	12	22 29,5	16 23,5	8 12	23,5 31	M 2 x 2,5	1,5	0,01 0,02
LLMHS 9 TA LLMHS 9 LA	10	20	2,5	15	30 38,5	21,5 30	10 15	32 40,5	M 3 x 3	2	0,02 0,03
LLMWS 9 TA LLMWS 9 LA	12	30	4,5 3,5	21 23	36,5 48,5	28 40	12 24	40 50,5	M 3 x 3	2	0,04 0,06
LLMHS 12 TA LLMHS 12 LA	13	27	3,5	20	33 45	23 35	15 20	36 48	M 3 x 3,5	3	0,03 0,06
LLMWS 12 TA LLMWS 12 LA	14	40	6	28	42,5 56	32,5 46	15 28	45,5 59	M 3 x 3,5	3	0,08 0,11
LLMHS 15 TA LLMHS 15 LA	16	32	3,5	25	41,5 57,5	29,5 45,4	20 25	44,5 61,5	M 3 x 4	4	0,06 0,10
LLMWS 15 TA LLMWS 15 LA	16	60	7,5	45	51,2 70,5	42 61,1	20 35	55,5 74,5	M 4 x 4,5	4	0,15 0,22

Accessories

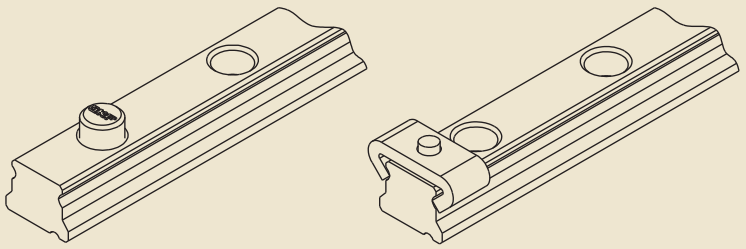

Standard

Steel end-stop

In addition to the plastic end-stop which is fastened in the first and last rail hole, there is also an option for a steel end-stop that can be mounted in any hole. Order suffix – M.

Attention:
This does not serve as a limit stop.

Rail dimensions

Rail dimensions								Basic load rating		Static moments		
Designation	H_4 (mm)	W (mm)	W_4 (mm)	W_5 (mm)	d_3x$d_2$xh (mm)	F (mm)	Weight (kg)	C (N)	Co (N)	M_A (Nm)	M_B (Nm)	M_C (Nm)
LLMHS 7 TA LLMHS 7 LA	4,8	7	3,5	-	2,5 x 4,5 x 2,5	15	0,19	860 1 400	1 670 2 700	4,9 7	4,9 7	5,2 9
LLMHS 9 TA LLMHS 9 LA	6,5	9	4,5	-	3,5 x 6 x 3,5	20	0,31	1 850 2 295	3 130 4 270	11,2 20,1	11,2 20,1	13,2 17,9
LLMWS 9 TA LLMWS 9 LA	7,5	18	9	-	3,5 x 6,0 x 4,5	30	0,96	2 200 2 820	3 800 5 680	14,2 30,2	14,2 30,2	30,4 45,1
LLMHS 12 TA LLMHS 12 LA	8,8	12	6	-	3,5 x 6 x 4,5	25	0,62	2 550 3 470	4 000 6 225	15 34,5	15 34,5	21,7 33,8
LLMWS 12 TA LLMWS 12 LA	8,8	24	12	-	4,5 x 8 x 4,5	40	1,40	3 300 4 150	5 780 8 000	30 55,8	30 55,8	69 95,6
LLMHS 15 TA LLMHS 15 LA	10,8	15	7,5	-	3,5 x 6 x 4,5	40	1,02	2 880 4 670	5 390 8 720	21 57	21 57	40,2 67,6
LLMWS 15 TA LLMWS 15 LA	10,8	42	9,5	23	4,5 x 8 x 4,5	40	2,95	3 890 5 830	7 060 10 600	40 94	40 94	148 225

LZM miniature slides

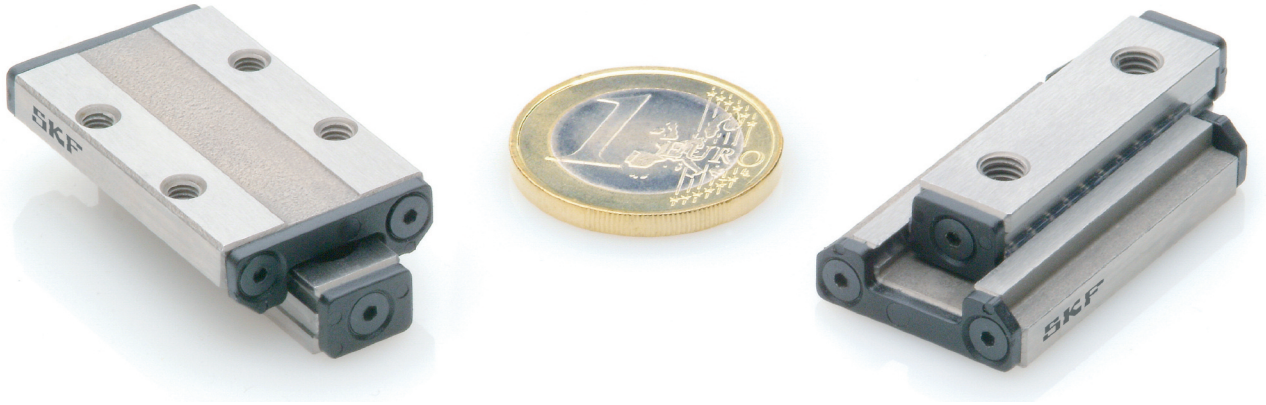

With the new LZM miniature slide product range SKF offers the ideal solution for linear motion applications for short strokes and compact boundary dimensions. The use of miniature slides has increased in medical applications, measurement technologies and micro mechanics & assembly.

The different LZM miniature slide components meet the highest precision standards. LZM miniature slides feature high running accuracy and smooth motion.

LZM miniature slides are manufactured with all stainless steel components. Optimised hardness enables long endurance life and high performance within compact boundary dimensions.

The new LZM miniature slides have been designed to ensure high system stiffness and precision guidance.

Running accuracies of 2 µm over a stroke of 100 mm are attainable depending on the particular application. Ease of installation is another advantage of the LZM miniature slides. Unlike cross roller systems using 4 rails and cages to be assembled on the production floor, the LZM slide provides a complete slide that can simply be bolted into place without the use of precision devices to set preload.

Every application provides new challenges for the modern designer. SKF will modify existing designs to meet your specific technical requirements.

Applications:
- Pneumatics
- Semi conductor manufacturing
- Medical
- Micro- and electronics assembly
- Measurement applications
- Fiber optics

Advantages:
- Compact design
- High load carrying capacity
- Very good running accuracy
- Smooth running
- High stiffness
- Easy assembly

Technical data

Structure	Four-point contact with identical load angles
Range	Four (4) sizes (7, 9, 12 and 15)
Temperature resistance	From -20 °C up to +80 °C
Speed	Up to 3 m/s
Acceleration	Up to 80 m/s^2 (preloaded system)
Preload class	Three (3) preload classes (T0, T1 and T2) T0 = standard, light clearance T1 = light preload, very slight clearance T2 = medium preload, no clearance
Accuracy class	Two (2) accuracy classes (P1 and P5) P1 = high P5 = standard, for most applications
Lubrication	Slides are pre-lubricated with “Paraliq P460”

Material specifications

Carriage & rail	Steel 1.4034
Balls	Steel 1.3541
End piece	Plastic
Cage	Plastic

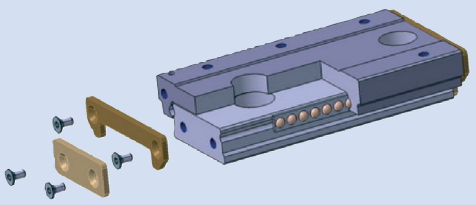

LZM miniature slides

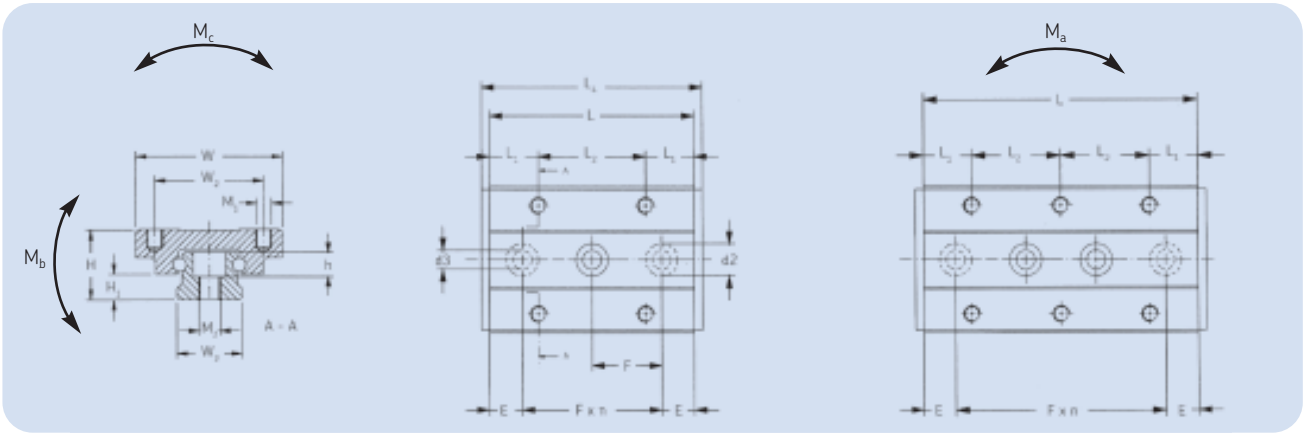

Type	W	W_2	W_3	L_2	M_1 x depth	d3 x d2 x h	H	H_1	M_2	F
	mm									
LZM HS 7	17	12	7	8	M2 x 2,5	2,5 x 4,5 x 2,5	8	2,35	M3	15
LZM HS 9	20	15	9	13	M3 x 3	3,5 x 6,0 x 3,5	10	3,55	M4	20
LZM HS 12	27	20	12	15	M3 x 3,5	3,5 x 6,0 x 4,5	13	4,7	M4	25
LZM HS 15	32	25	15	20	M3 x 4	3,5 x 6,0 x 4,5	16	6	M4	40

Type	L	L_4	E	L_1	max. stroke	Number of holes carriage	rail	C	C_0	Ma/Mb	Mc
	mm					-		N		Nm	
LZM HS 7	26	29	5,5	5	24	6	2	700	1 100	3,5	6
	34	37	9,5	5	34	8	2	900	1 400	5,5	7
	50	53	10	5	50	12	3	1 100	2 000	12	10
	66	69	10,5	5	66	16	4	1 400	2 700	21	14
LZM HS 9	32	35	8	9,5	28	4	2	1 200	1 800	7	12
	42	45	11	8	40	6	2	1 400	2 100	11	15
	55	58	7,5	8	54	8	3	1 900	3 400	18	19
	81	84	10,5	8	78	12	4	2 500	4 900	43	29
	94	97	7	8	92	14	5	2 700	5 500	57	33
LZM HS 12	37	40	6	11	32	4	2	2 200	3 300	11	21
	51	54	13	10,5	47	6	2	2 600	4 300	22	28
	66	69	8	10,5	62	8	3	3 000	5 300	36	36
	96	99	10,5	10,5	95	12	4	3 800	7 200	76	52
	126	129	13	10,5	122	16	6	4 700	9 700	131	68
LZM HS 15	52	56	6	16	50	4	2	2 800	3 900	25	42
	85	89	22,5	12,5	80	8	2	4 600	7 800	73	70
	105	109	12,5	12,5	102	10	3	5 100	9 100	106	84
	165	169	22,5	12,5	162	16	4	7 300	15 000	264	131

	Miniatur slide unit	Standard	Size		Length (L)
Order example:	LZM	HS	9	-	32

Special designs tailored to customer requirements

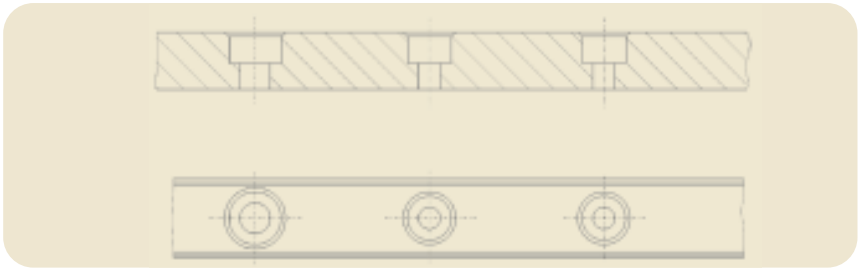

- different fastening holes (stepped holes) in terms of size and depth of holes relative to each other.

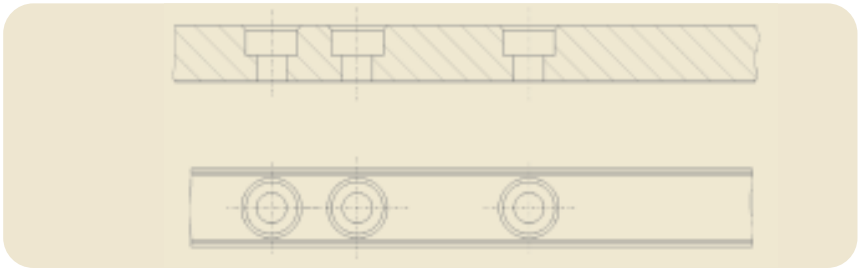

- variable hole distances

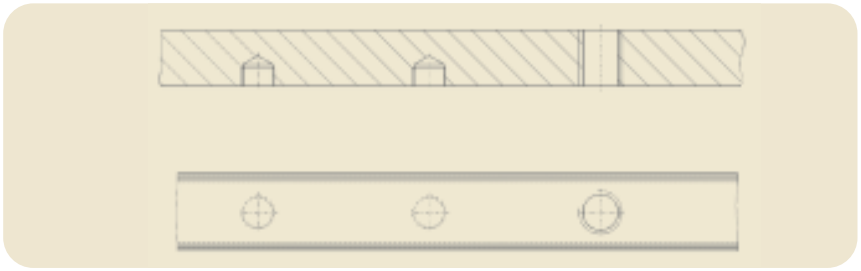

- blind holes and threads
- through holes or through threads



- without fixing bores for gluing of rail

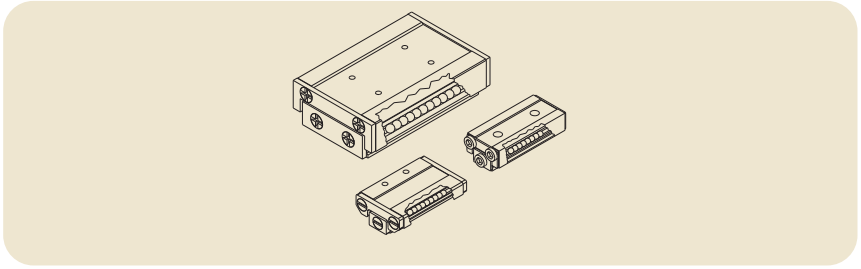

- special design with limited stroke (without ball recirculation) according to customer request

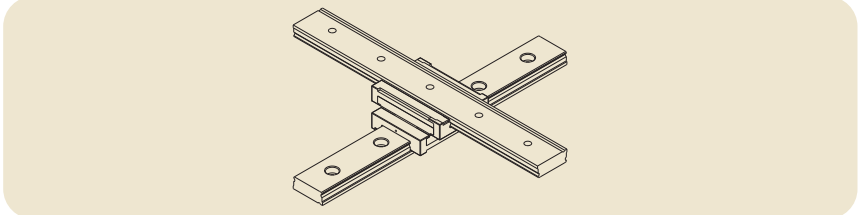

- 90° cross arrangement in different sizes

Notes

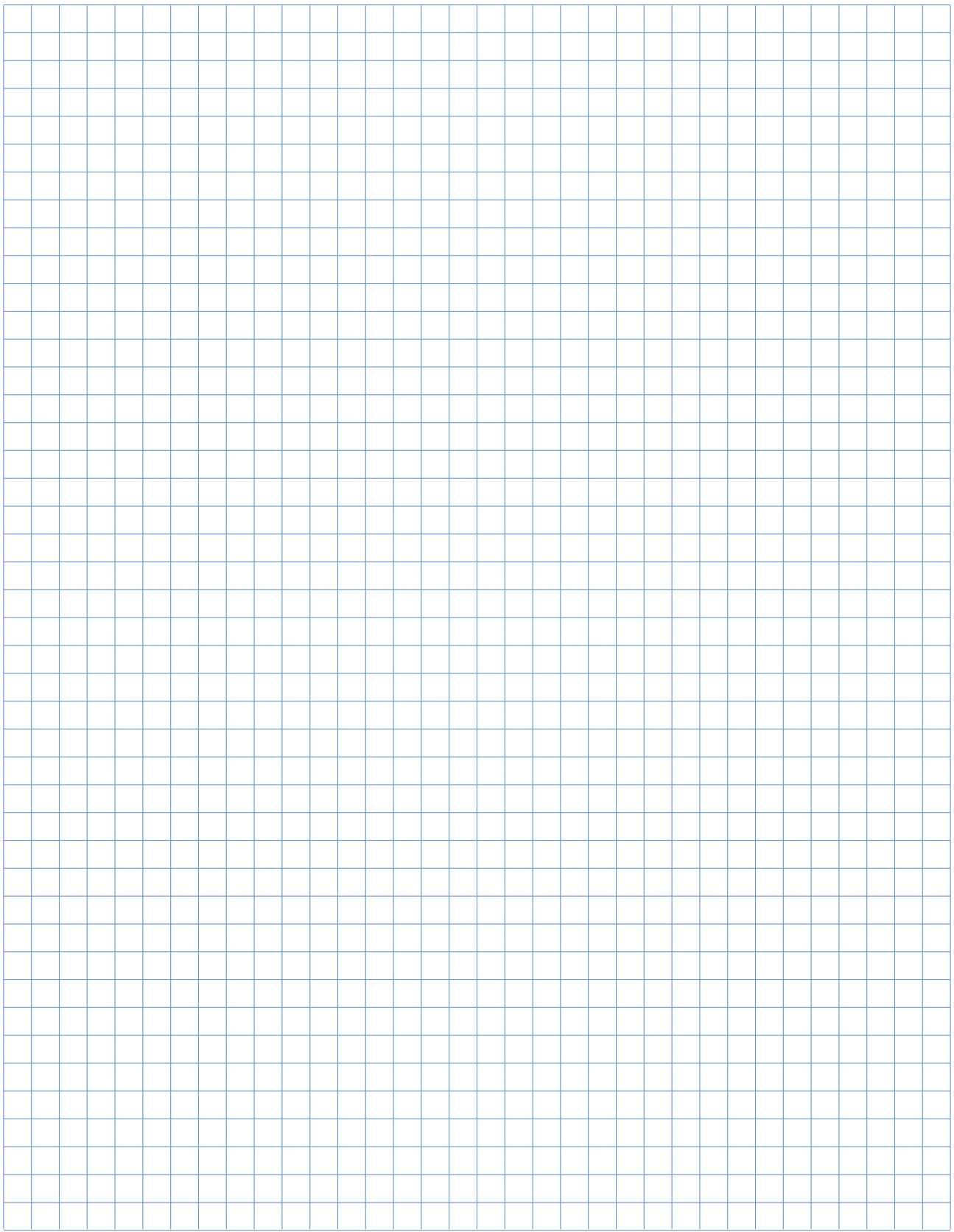

Notes

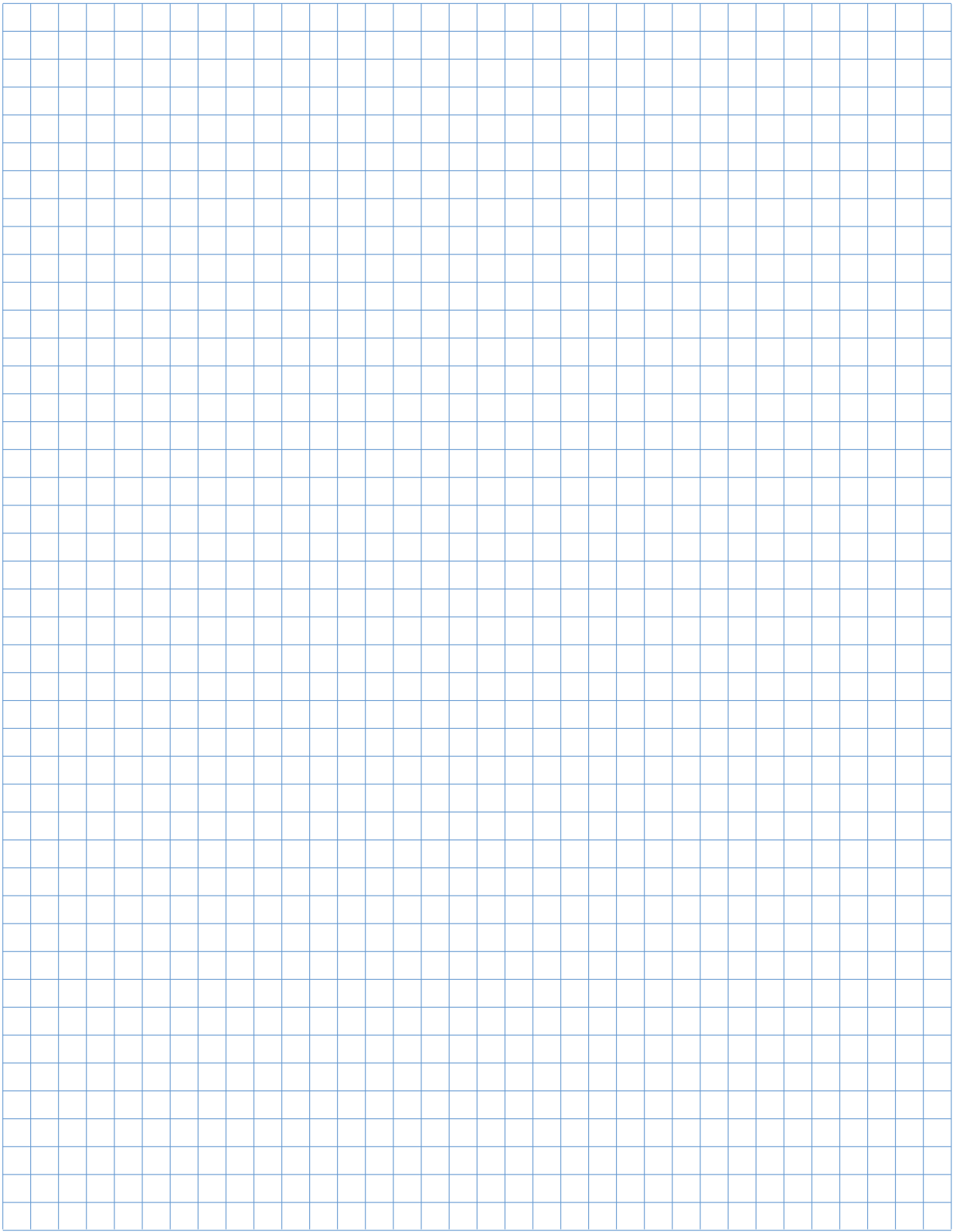

Notes

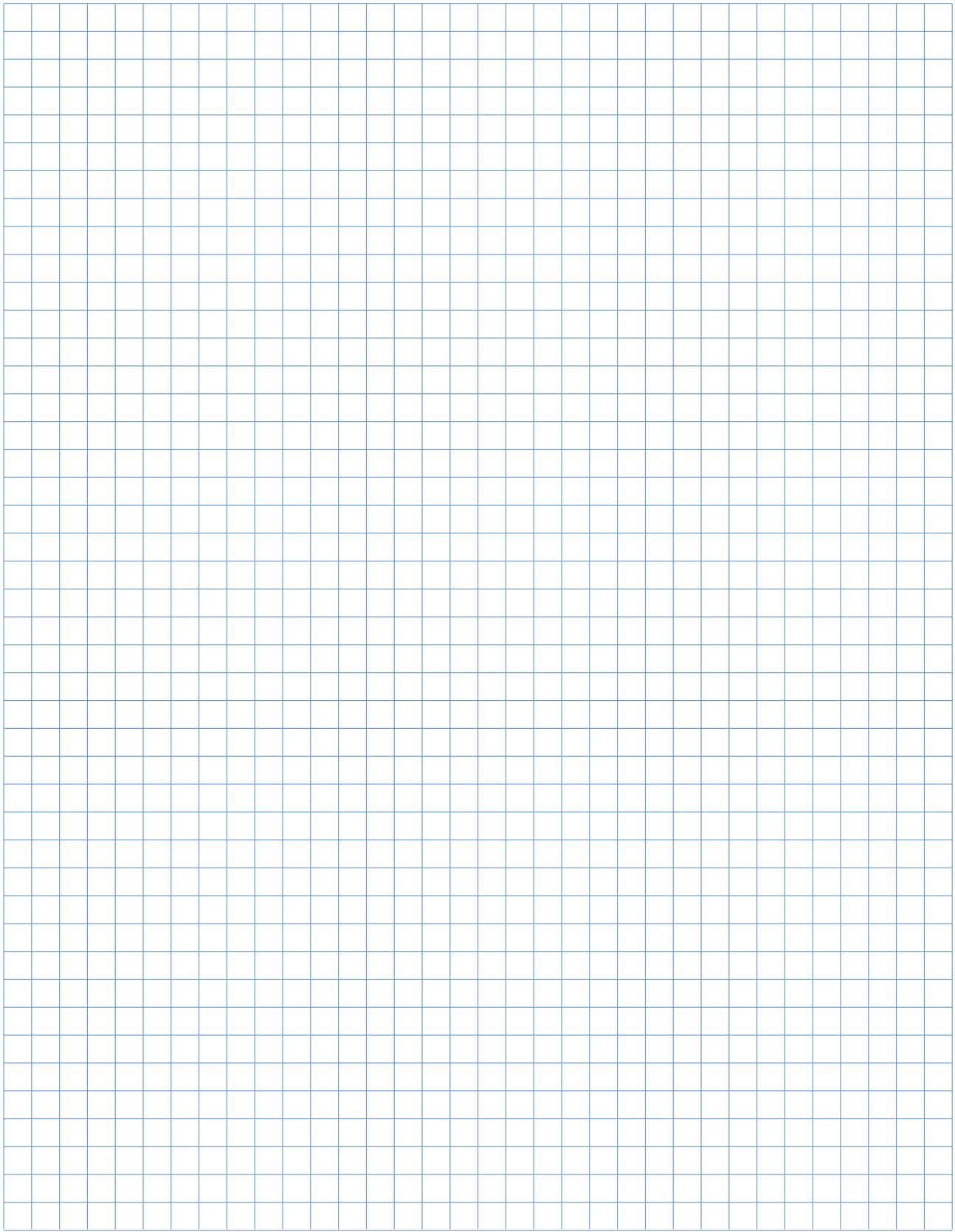



® SKF is a registered trademark of the SKF Group.

© SKF Group 2011
The contents of this publication are the copyright of the publisher and may not be reproduced (even extracts) unless prior written permission is granted. Every care has been taken to ensure the accuracy of the information contained in this publication but no liability can be accepted for any loss or damage whether direct, indirect or consequential arising out of the use of the information contained herein.

PUB 4753/1 EN · April 2011

This publication supersedes publication 4753EN - 0608A

Printed in Sweden on environmentally friendly paper.

skf.com