





Linear motion standard range

Contents

(by chapters)

The SKF brand now stands for more than ever before, and means more to you as a valued customer.

While SKF maintains its leadership as the hallmark of quality bearings throughout the world, new dimensions in technical advances, product support and services have evolved SKF into a truly solutions-oriented supplier, creating greater value for customers.

These solutions encompass ways to bring greater productivity to customers, not only with breakthrough application-specific products, but also through leading-edge design simulation tools and consultancy services, plant asset efficiency maintenance programmes, and the industry's most advanced supply management techniques.

The SKF brand still stands for the very best in rolling bearings, but it now stands for much more.

SKF – the knowledge engineering company

1 General

2 Guiding systems

14 Shaft guidings
19 Ordering key for LBBR – compact series
20 LBBR Compact series
20 LBBR ../HV6 Corrosion resistant type
21 LPBR Linear plain bearings
21 LUHR Linear ball bearing units
22 LUHR PB Linear plain bearing units
22 LUJR Linear ball bearing units
23 LTBR Tandem linear ball bearing units
23 LSHS Shaft blocks for compact series
24 LTDR Duo linear ball bearing units
24 LQBR Quadro linear ball bearing units
25 LEBS Tandem shaft blocks
25 Appropriate special seals
26 Ordering key for LBBR – standard series
28 LBCD Standard series 3, closed type
28 LBCR Standard series 3, closed type
29 LPAR Linear plain bearings, closed type
29 LUCD Single units, self-aligning, closed type
30 LUCE Single units, self-aligning, closed type
30 LUCR Single units, closed type
31 LUCR PA Single plain bearing units, closed type
31 LUCS Single units, closed type
32 LUND Single units, self-aligning, closed type
32 LUNE Single units, self-aligning, closed type
33 LVCD Flanged self-aligning units
33 LVCR Flanged units
34 LSCS Shaft blocks
34 LSNS Shaft blocks
35 LTCD Tandem units, self-aligning, closed type
35 LTCR Tandem units, closed type
36 LQCD Quadro units, self-aligning, closed type
36 LQCR Quadro units, closed type
37 LEAS Tandem shaft blocks, closed type
38 LBCF Standard series 3, open type
38 LBCT Standard series 3, open type
39 LBHT Heavy-load type, open type
39 LPAT Linear plain bearings, open type
40 LUCF Single units, self-aligning, open type
40 LUCT Single units, open type
41 LUCT BH Single heavy-load units, open type
41 LUCT .. PA Single units, open type
42 LUNF Single units, self-aligning, open type
42 LTCF Tandem units, self-aligning, open type
43 LTCT Tandem units, open type
43 LQCF Quadro units, self-aligning, open type
44 LQCT Quadro units, open type
44 LRCB/LRCC Shaft supports, open type

45 Precision shafts
46 LJM Precision shafts, steel
46 LJMH Hard chromium plated precision shafts
46 LJMR Precision shafts, stainless steel
46 LJMS Precision shafts, stainless steel
46 LJT Hollow shafts, high grade steel
47 Ordering key for precision shafts
48 ESSC 1 Precision shaft configurations
48 ESSC 2 Precision shaft configurations
48 ESSC 3 Precision shaft configurations
48 ESSC 4 Precision shaft configurations
49 ESSC 5 Precision shaft configurations
49 ESSC 6 Precision shaft configurations
49 ESSC 7 Precision shaft configurations
50 ESSC 8 Precision shaft configurations
50 ESSC 9 Precision shaft configurations
50 ESSC 10 Precision shaft configurations
51 Design and basic data

53 Linear ball bearing table without drive
54 Ordering key for linear ball bearing table without drive
55 LZBU .. A-2LS Quadro linear tables
56 LZBU .. B-2LS Quadro linear tables
57 LZAU ..2LS Quadro linear tables

58 Applications

59 Profile rail guides
60 Ordering key for profile rail guides
61 Accessories for profile rail guides
62 LLRHS .. SA
62 LLRHS .. A
62 LLRRS .. LA
64 LLRHS .. SU
64 LLRHS .. U
64 LLRHS .. LU
66 LLRHS .. R
66 LLRHS .. LR

68 Applications

69 Miniature profile rail guides
72 Ordering key for miniature profile rail guides
73 LLMHR Standard rails
73 LLMWR Wide rails
73 LLMHC .. TA Standard carriages
74 LLMWC .. TA Carriages for wide rails
74 LLMHC .. LA Long carriages
74 LLMWC .. LA Long carriages for wide rails

75 Applications

77 Precision rail guides
77 Modular range rail guides
78 Anti cage-creep system (ACSM) for LWRE
79 Ordering key for precision rail guides
80 LWR Precision rail guides
80 LWRB Precision rail guides
80 LWAL Cross roller assemblies, aluminium cages
80 LWJK Ball assemblies, plastics cages
80 LWAK Cross roller assemblies, plastics cages
80 LWERA End stops
80 LWGD Special attachment screws
81 LWR 3/6 .. Kit Precision rail guide kits
82 LWRB 1 Precision rail guides
82 LWRB 2 Precision rail guides
83 LWR 3 Precision rail guides
83 LWR 6 Precision rail guides
84 LWR 9 Precision rail guides
85 LWRE Precision rail guides
85 LWAKE Cross roller assemblies, plastics cage
85 LWERE End stops
85 LWGD Special attachment screws
86 LWRE 3/6 .. Kit Precision rail guide kits
87 LWRE 3/6 .. ACS Kit Precision rail guide kits with ACS
88 LWRE 3 Precision rail guides
88 LWRE 2211 Precision rail guides
89 LWRE 6 Precision rail guides
89 LWRE 9 Precision rail guides
90 LWRB 2 ACSM Precision rail guides
90 LWRE 3/6/9 ACSM Precision rail guides
90 LWJK 2 ACSM Precision rail guides
90 LWAKE 3/6/9 ACSM Precision rail guides
91 LWRE 3 ACSM Kit Precision rail guide kits with ACSM
91 LWRE 6 ACSM Kit Precision rail guide kits with ACSM
92 LWRE 3 ACS Precision rail guides with ACS
92 LWRE 2211 ACS Precision rail guides with ACS
93 LWRE 6 ACS Precision rail guides with ACS
93 LWRE 9 ACS Precision rail guides with ACS
94 LWRM/LWRV Precision rail guides
94 LWHW Needle roller cage, aluminium
94 LWEARM End stops
94 LWEARV End stops
94 LWGD Special attachment screws
95 LWRM 6/LWRV 6 Precision rail guides
95 LWRM 9/LWRV 9 Precision rail guides
96 LWM/LWV Precision rail guides
96 LWHW Needle roller cage, aluminium
96 LWEAM End stops
96 LWEAV End stops
96 LWGD Special attachment screws
97 LWM 3015/LWV 3015 Precision rail guides
97 M3 DIN 84
97 LWM 4020/LWV 4020 Precision rail guides
97 M5 DIN 84
98 LWM 5025/LWV 5025 Precision rail guides
98 M6 DIN 84
98 LWM 6035/LWV 6035 Precision rail guides
98 M8 DIN 84
99 LWM 7040/LWV 7040 Precision rail guides
99 M10 DIN 84
99 LWM 8050/LWV 8050 Precision rail guides
99 M12 DIN 84
100 LWRPM/LWRPV Precision rail guides
101 LWRPM 3/6/9 Precision rail guides
101 LWRPV 3/6/9 Precision rail guides

102 Applications

3 Driving systems

105 Ball and roller screws

106 How to make your choose

107 Ball screws
108 Ordering key for ball screws
109 SD/BD Miniature screws
109 SH Miniature screws
110 SX/BX Universal screws
111 FHRF Round flanges for SX/BX nuts
111 FHSF Square flanges for SX/BX nuts
112 SN/BN Precision screw
112 SND/BND Precision screw, DIN standard
113 PN Precision screw, preloaded
113 PND Precision screw, DIN standard, preloaded
114 SL/BL Long lead screws
114 SLD/BLD Long lead screws, DIN standard
116 Rotating nut
118 Shaft and combinations for rolled ball screws
119 Standard end machining for nominal diameter < 16 mm
120 Standard end machining for nominal diameter ≥ 16 mm
122 PLBU Plummer bearing units
122 FLBU Flanged bearing units
123 BUF End bearing units
123 FBS – Q Support bearing cartridge units (4 bearings matched in set)
123 FBS – D Support bearing cartridge units (2 bearings matched in set)
124 Ground ball screws
124 Service range (Europe only)
125 Ordering key for ground ball screws
126 PGFE screw with DIN double flanged, preloaded nuts
126 SGFE screw with DIN single flanged, axial play
127 PGFJ screw with DIN flanged nuts with internal preload

128 Precision ground screw (inches version)

130 Applications

131 Roller screws
132 Planetary roller screws: principle
133 Recirculating roller screws: principle
134 Complete assemblies
134 Service Range
137 Ordering key for roller screws

138 Planetary roller screws

138 BRC Range
139 FLRBU/BRC Range
140 SRC Range
142 SRF Range
144 TRU/PRU Range
147 TRK/PRK Range

150 Recirculating roller screws
150 BVC Range
151 FLRBU/BVC
152 SVC Range
153 PVU Range
154 PVK Range
155 FLRBU Accessories for roller screws
157 Symbols

158 Applications

4 Actuation systems

161 About actuation systems

162 Selection guide

165 Telescopic pillars
165 TELEMAG: principle
166 TELEMAG TFG
168 TELEMAG TLG
169 TELESMART: principle
170 TELESMART TXG

171 Linear actuators
171 CAT: principle
172 CAT 33H
174 CAT 33
176 CAT 32B
178 Page with all detailed drawings of CAT 32B, CAT 33 and CAT 33H
179 CAR: principle
180 CAR 22
181 CAR 32
182 CAR 40
183 MAGFORCE: principle
184 WSP
185 ASM
186 DSP
187 SKG
188 SKD
189 STW
190 STG
191 STD
192 SKS/SKA
193 SLS
194 CALA 36A
195 CAXC 33 limit switches
196 MATRIX
197 MAX1
198 MAX3
199 MAX6
200 CARE 33
202 IMD3 series
204 ID8A series
206 ID8B series
208 IA4A series
210 IA4B series

212 Control units
213 BCU
214 BCP
216 SCU
217 SCP

218 Hand switches
219 EHA 3

220 Foot switch
221 ST

222 Desk switches
223 ST

224 Spare parts
224 Type codes for accessories and spare parts:
224 CAR 22
224 CAR 32
225 CAR 40
225 CAT 33
226 CAT 33H
226 CAT 32B
227 Attachments, spare parts
228 Limit switches, spare parts
228 CAXC 33
228 CAXB 22/32/32b/40
229 Motors, spare parts

230 Glossary and definitions

233 Applications

5 Positioning systems

235 General
235 LZM miniature slides: principle
236 GCL Standard slides: principle
236 GCLA Standard slides: principle
236 RM Standard slides: principle
236 SSM/SSK Dovetail slides: principle
236 TO/TS Compact cross tables: principle
236 RSM/RSK Precision slides: principle
237 LZBB/LZAB Linear ball bearing tables: principle
237 LTB Profile rail guide slides: principle
237 Complete systems
240 Ordering key for miniature slides
241 LZM Miniature slides
243 Ordering key for standard slides
244 GCL Standard slides, steel version
246 GCLA Standard slides, aluminium version
248 RM Standard slides
249 Ordering key for slides, tables and compact cross tables
250 SSM/SSK Dovetail slides
253 TO/TS Compact cross tables
254 RSM/RSK Precision slides
256 Ordering key for linear ball bearing table with drive
257 LZBB Linear ball bearing tables, ball screw
258 LZAB Linear ball bearing tables, ball screw
259 Ordering key for profile rail guide slides
260 LTB Profile rail guide slides

263 Applications

6 Customized solutions

265 Standard plug & play electromechanical cylinder
265 Compact electromechanical cylinder
266 Complete systems for positioning
266 Linear motor tables

7 SKF – The knowledge engineering company

Contents

(by alphabetical order)

A

About actuation systems 161
Accessories for profile rail guides 61
Actuation systems 161
Anti cage-creep system (ACSM) for LWRE 78
Applications:
- For actuators 233
- For ball screws 130
- For linear ball bearings 58
- For miniature profile rail guides 75
- For positioning tables 263
- For precision rail guides 102
- For profile rail guides 68
- For roller screws 158

Appropriate special seals 25
ASM 185
Attachments, actuators spare parts 227

B

Ball and roller screws 105
Ball screws 107
BCU 213
BCP 214
BRC 138
BUF 123
BVC 150

C

CALA 36A: principle 194
CALA 36A 195
CAR: principle 179
CAR 22 . . . . . 180, 224
CAR 32 . . . . . 181, 224
CAR 40 . . . . . 182, 225
CARE 33: principle 200
CARE 33 200
CAT: principle 171
CAT 32B 176, 226
CAT 33 . . . . . 174, 225
CAT 33H 172, 226
CAXB 22/32/32b/40 228
CAXC 33 Limit switches 195, 228
Compact electromechanical cylinder 265
Complete assemblies, roller screws 134
Complete systems for positioning 266
Complete systems 237
Control units: principle 212
Customized solutions 265

D

Design and basic data 51
Desk switches: principle 222
Driving systems 105
DSP 186

E

EHA 3 219
ESSC 1 48
ESSC 2 48
ESSC 3 48
ESSC 4 48
ESSC 5 49
ESSC 6 49
ESSC 7 49
ESSC 8 50
ESSC 9 50
ESSC 10 50

F

FBS – D 123
FBS – Q 123
FHRF 111
FHSF 111
FLBU 122
FLRBU/BRC 139
FLRBU/BVC 151
FLRBU Accessories for roller screws 155
Foot switch: principle 220

G

GCL 244
GCL: principle 236
GCLA 246
GCLA: principle 236
General 9

General (positioning systems) . . . 235
Glossary and definitions for actuators . . . 230
Ground ball screws . . . 124
Guiding systems . . . 13

H

Hand switches: principle . . . 218
How to make your choose . . . 106

I

IA4A series . . . 208
IA4B series . . . 210
ID8A series . . . 204
ID8B series . . . 206
IMD3 series . . . 202

L

LBBR . . . 20
LBBR ../HV6 . . . 20
LBCD . . . 28
LBCF . . . 38
LBCR . . . 28
LBCT . . . 38
LBHT . . . 39
LEAS . . . 37
LEBS . . . 25
Limit switches, actuators spare parts . . . 228
Linear actuators . . . 171
Linear ball bearing table without drive . . . 53
Linear motor tables . . . 266
LJM . . . 46
LJMH . . . 46
LJMR . . . 46
LJMS . . . 46
LJT . . . 46
LLMHC ..LA . . . 74
LLMHC ..TA . . . 74
LLMHR . . . 73
LLMWC ..LA . . . 74
LLMWC ..TA . . . 74
LLMWR . . . 73
LLRHS ..A . . . 62
LLRHS ..LR . . . 66
LLRHS ..LU . . . 64
LLRHS ..R . . . 66
LLRHS ..SA . . . 62
LLRHS ..SU . . . 64
LLRHS ..U . . . 64
LLRRS ..LA . . . 62
LPAR . . . 29
LPAT . . . 39
LPBR . . . 21
LQBR . . . 24
LQCD . . . 36
LQCF . . . 43
LQCR . . . 36
LQCT . . . 44
LRCB/LRCC . . . 44
LSCS . . . 34
LSHS . . . 23
LSNS . . . 34
LTB: principle . . . 237
LTB . . . 260
LTBR . . . 23
LTCD . . . 35
LTCF . . . 42
LTCR . . . 35
LTCT . . . 43
LTDR . . . 24
LUCD . . . 29
LUCE . . . 30
LUCF . . . 40
LUCR PA . . . 31
LUCR . . . 30
LUCS . . . 31
LUCT . . . 40
LUCT .. PA . . . 41
LUCT BH . . . 41
LUHR . . . 21
LUHR PB . . . 22
LUJR . . . 23
LUND . . . 32
LUNE . . . 32
LUNF . . . 42
LVCD . . . 33
LVCR . . . 33
LWAK . . . 80
LWAKE . . . 85
LWAKE 3/6/9 ACSM . . . 90
LWAL . . . 80
LWEAM . . . 96
LWEARM . . . 94
LWEARV . . . 94
LWEAV . . . 96
LWERA . . . 80
LWERE . . . 85
LWGD . . . 80, 85, 94, 96
LWHW . . . 94, 96
LWJK . . . 80
LWJK 2 ACSM . . . 90
LWM/LWV . . . 96
LWM 3015/LWV 3015 . . . 97
LWM 4020/LWV 4020 . . . 97
LWM 5025/LWV 5025 . . . 98
LWM 6035/LWV 6035 . . . 98
LWM 7040/LWV 7040 . . . 99
LWM 8050/LWV 8050 . . . 99
LWR . . . 80
LWR 3 . . . 83
LWR 3/6 . . . 81
LWR 6 . . . 83
LWR 9 . . . 84

LWRB 80
LWRB 1 82
LWRB 2 82
LWRB 2 ACSM 90
LWRE 2211 88
LWRE 2211 ACS 92
LWRE 3 ACS 92
LWRE 3 88
LWRE 3 ACSM Kit 91
LWRE 3/6 .. Kit 86
LWRE 3/6 .. ACS Kit 87
LWRE 3/6/9 ACSM 90
LWRE 6 89
LWRE 6 ACS 93
LWRE 6 ACSM Kit 91
LWRE 9 89
LWRE 9 ACS 93
LWRM 94
LWRM 6 95
LWRM 9 95
LWRPM 100
LWRPM 3/6/9 101
LWRPV 100
LWRPV 3/6/9 101
LWRV 94
LWRV 6 95
LWRV 9 95
LZAB 258
LZAU ..2LS 57
LZBB 257
LZBB/LZAB: principle 237
LZBU .. A-2LS 55
LZBU .. B-2LS 56
LZM 241
LZM: principle 235

M

M3 DIN 84 97
M5 DIN 84 97
M6 DIN 84 98
M8 DIN 84 98
M10 DIN 84 99
M12 DIN 84 99
MAGFORCE: principle 183
MATRIX: principle 196
MAX1 197
MAX3 198
MAX6 199
Miniature profile rail guides 69
Modular range rail guides 77
Motors, actuators spare parts 229

O

Ordering key for:
Ball screw 108
Ground ball screws 125
LBBR – compact series 19
LBBR – standard series 26
Linear ball bearing table with drive 256
Linear ball bearing table without drive 54
Miniature profile rail guides 72
Miniature slides 240
Precision rail guides 79
Precision shafts 47
Profile rail guide slides 259
Profile rail guides 60
Roller screws 137
Slides, tables and compact cross tables 249
Standard slides 243

P

Page with all detailed drawings of CAT 32B,
CAT 33 and CAT 33H 178
PGFE 126
PGFJ 127
Planetary roller screws 138
Planetary roller screws: principle 132
PLBU 122
PN 113
PND 113
Positioning systems 235
Precision ground screw (inches version) 128
Precision rail guides 77
Precision shafts 45
Profile rail guides 59
PVK 154
PVU 153

R

Recirculating roller screws 150
Recirculating roller screws: principle 133
RM 248
RM: principle 236
Roller screws 131
Rotating nut 116
RSM/RSK 254
RSM/RSK: principle 236

S

SCU 216
SCP 217
SD/BD 109
Selection guide 162
Service range, roller screws 134

Service range, ground ball screws (Europe only) 124
SGFE 126
SH 109
Shaft and combinations for rolled ball screws 118
Shaft guiding 14
SKD 188
SKG 187
SKS/SKA 192
SL/BL 114
SLD/BLD 114
SLS 193
SN/BN 112
SND/BND 112
Spare parts for actuators 224
SRC 140
SRF 142
SSM/SSK 250
SSM/SSK: principle 236
ST desk switches 223
ST foot switch 221
Standard end machining for nominal diameter < 16 mm 119
Standard end machining for nominal diameter ≥ 16 mm 120
Standard plug & play electromechanical cylinder 265
STD 191
STG 190
STW 189
SVC 152
SX/BX 110
Symbols 157

T

TELEMAG: principle 165
TELEMAG TFG 166
TELEMAG TLG 168
Telescopic pillars 165
TELESMART: principle 169
TELESMART TXG 170
TO/TS 253
TO/TS: principle 236
TRK/PRK 147
TRU/PRU 144
Type codes for accessories and spare parts:
CAR 22 224
CAR 32 224
CAR 40 225
CAT 33 225
CAT 33H 226
CAT 32B 226

W

WSP 184

General

About SKF

The SKF Group is one of the leading global supplier of products, solutions and services in the area comprising rolling bearings, seals, mechatronics, services and lubrication systems. The Group's service offer also includes technical support, maintenance services, condition monitoring and training.

The SKF business is organized into three divisions; Industrial, Automotive and Service. Each division serves a global market, focusing on its specific customer segments.

SKF has 120 manufacturing sites distributed all over the world and its own sales companies in 70 countries. SKF is also represented in 140 countries through some 15 000 distributors and dealers. SKF is always close to its customers for the supply of both products and services.

SKF was founded in 1907 and from the very beginning focused intensively on quality, technical development and marketing. The results of the Group's efforts in the area of research and development have led to a growing number of innovations that has created new standards and new products in the bearing world.

The Group has a global ISO 14001 environmental certification and global health and safety management standard OHSAS 18001 certification. Its operations have been approved for quality certification in accordance with either ISO 9000 or QS 9000.

Mechatronics

Mechatronics is the science of bringing together mechanics and electronics into exciting new solutions. It is a rapidly advancing area that provides dramatic opportunity to solve old problems in a clever and environmentally friend way. SKF has more than 400 engineers dedicated to this area.

By being at the forefront of this technology for many years, SKF has developed unique application knowledge in hardware and software. In combining actuators, bearings, sealing, lubrication, sensors and electronics competences, we have been able to develop a number of standard and customized solutions. SKF offers a wide assortment of mechatronic products:

- Actuation systems
- Linear motion
- Motion control
- Magnetic bearings

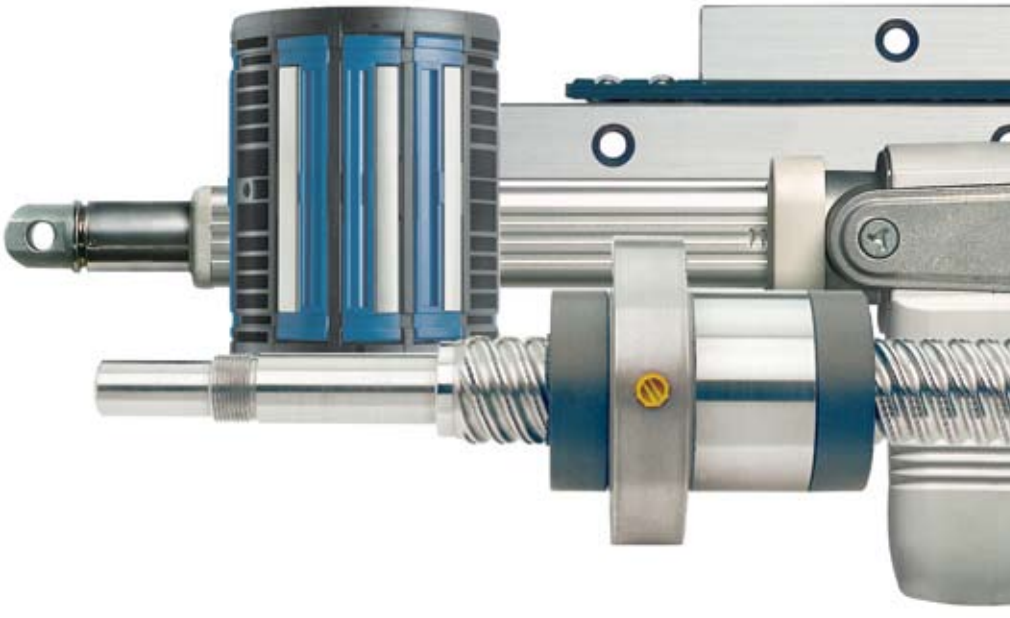

How to get more information

Selecting, defining and purchasing linear guidings, ball and roller screws and actuation systems from SKF has never been so simple.

www.skf.com

Consult SKF's comprehensive website for more information on linear motion and actuation products, together with a description of our services.

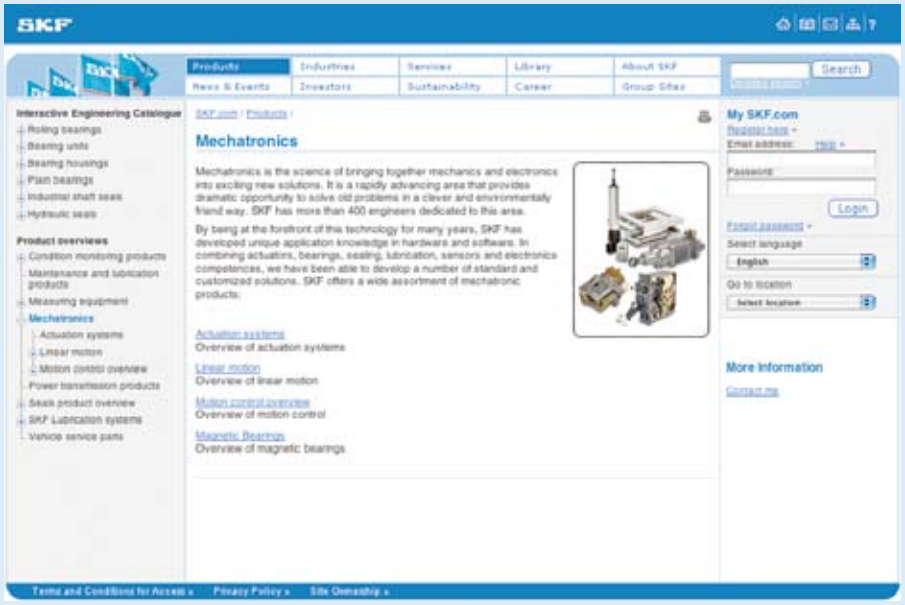

On-line product selection

Discover our wide range of high precision components, units and systems for linear movements, providing solutions for guiding, driving, actuation and positioning.



3D drawings download

CAD files of our products can be accessed online following some simple steps: find the right product family from the product tree, you will be sent to the product selector and then find the product designation you want to download.

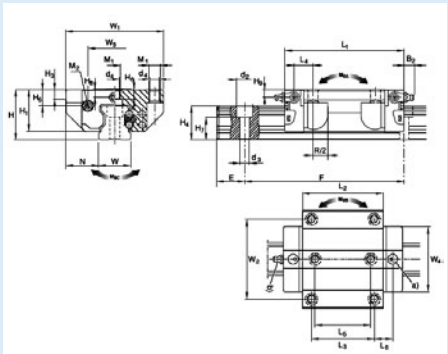

PDF catalogues download

In addition to this publication we have all product brochures available as pdf documents on the internet, ready to be downloaded.

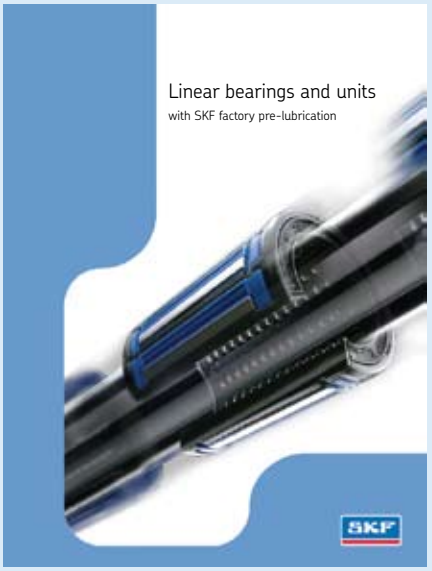

About this publication

The encyclopedia of the linear motion
This publication introduces over 260 pages of information on all the standard products with clear tables to help the customer select and order the right solution and correct product.

How to handle

This publication consists of 4 chapters divided as follows:

- Guiding systems
- Driving systems
- Actuation systems
- Positioning systems

The chapters are arranged from the most simple, the guiding systems, through to the most complex, the positioning systems, which consists of parts of the other components.

Each linear solution is introduced by a overview, which makes it easy to select the right product.

Different subjects are contained in the separate chapters, starting with a brief general description followed by the specific ordering key and the drawings with the data tables.

If a subject is divided into several sections, the corresponding ordering key is located at the beginning of each section, followed by the pages with tables and pictures of that section (for example, on **page 19** and on **page 26,** there are two ordering keys for the Linear ball bearings but they belong to different families: compact series and standard series).

The composition of the ordering keys is not unambigous, due to the structural difference of the products. Instead it follows the type of the individual product.

To determine the product code to be used on the order, do the following:

After identifying the type of product required by examining the relevant pages containing the main data, it is necessary to prepare the code for the order. This may consist of pre-set options, ordering key boxes already filled in (for example: type, colour, etc.) and options that can be selected from several items, empty boxes (for example: design, bearing, nut type, stroke, length, etc.).

In the ordering key, the options are set out under the associated subjects, with the indication of the code or the information to be entered (with the measurement restrictions contained in the associated table). The sequence of the ordering key is defined by the thin guiding lines that select the corresponding box.

The individual ordering key may contain indications or special notes.

Examples are given at the end of each ordering key.

In the chapter for the actuators, the selection of the item's dynamic load/speed and motor option should be made by use of an additional table with several options located above the ordering key.

An example is given below to show how to prepare the order code for an LZ long linear table.

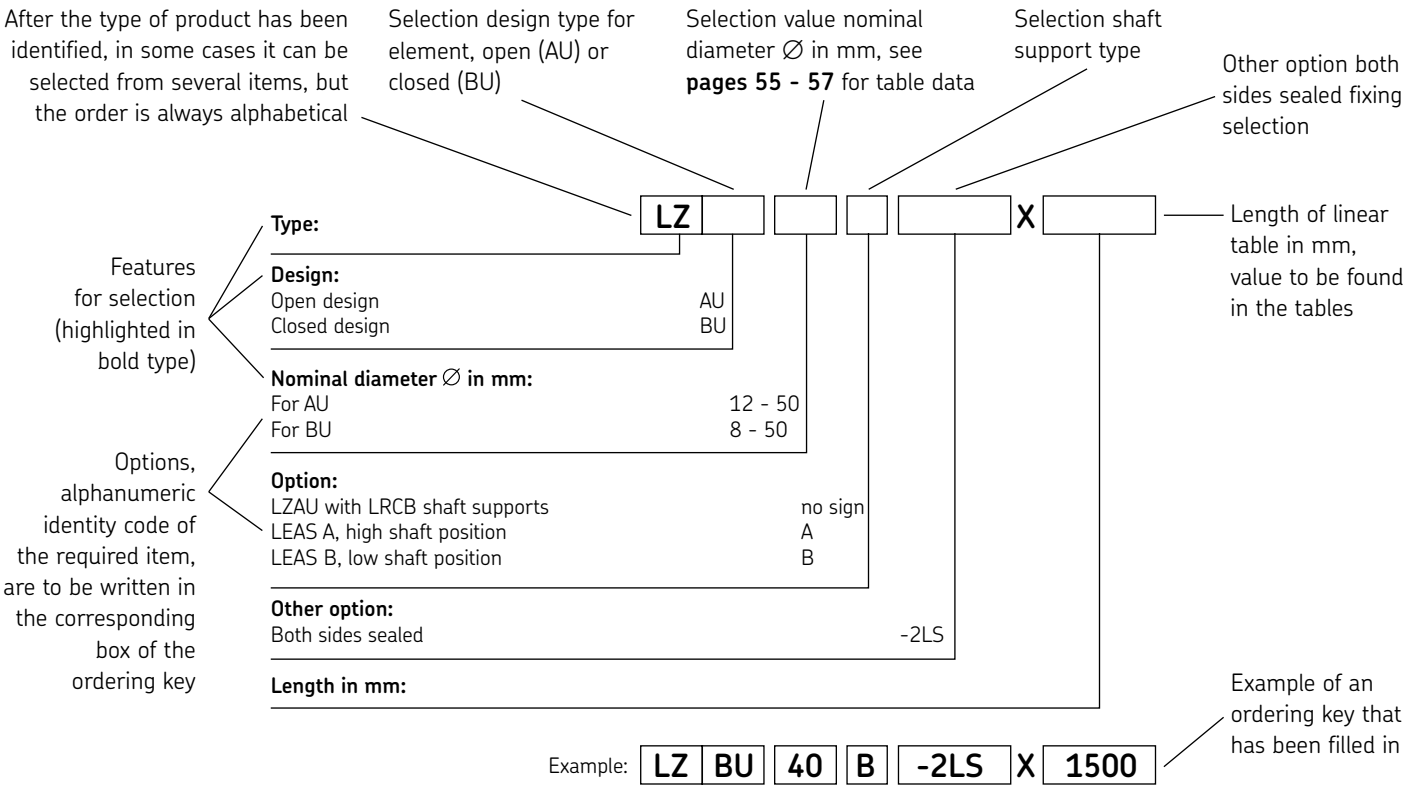

Light, steady and always on the run

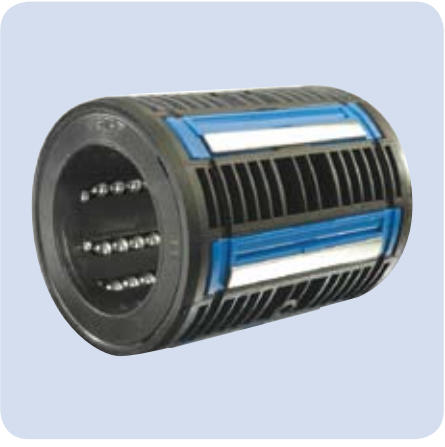

The hummingbird is not only the world's smallest bird, but it is also the most stable, thanks to the incredible speed of its wings (eighty pulsations per second) that allow it to be suspended in flight, so allowing itself to feed on the delicious nectar from many of the flowers in Latin America.

Lightness and stability are among the features that have given SKF the inspiration to create lightweight linear ball bearings which are capable of accommodating loads with the greatest efficiency.

The potential derived from such lightness is truly impressive.

Guiding systems

Fig. 1



Fig. 2



Fig. 3



Linear ball bearings (**fig. 1**), profile rail guides (**fig. 2**), miniature profile rail guides (**fig. 3**), precision rail guides (**fig. 4**): limited stroke, very high precision and performance capabilities.

Operating precision (**table 1**)
Comparison of the different positioning components and systems.

Fig. 4



Table 1

Operating precision (µm)	Guiding systems	Driving systems	Actuation systems	Positioning systems
0,1-1	Precision rail guides	Roller screws		Standard drives or linear motors with all guiding systems
1-10	Linear ball bearings, Standard slides	Linear motors		
10-100	Profile rail guides	Ball screws	Electro-mechanical actuators	
100-1 000				

Shaft guidings

Fig. 5



Fig. 6



Fig. 7



Linear ball bearings (**fig. 5, 6** and **7**) are bushings with recirculating ball tracks which provide low friction movement and the possibility of unlimited stroke. With the range of linear ball bearings, plain bearings and accessories, it is possible to design and build economical and simple linear guidance systems to suit a wide range of applications. The bearings are available in two size ranges: the compact ISO 1 series and the heavy duty standard ISO 3 series (**table 2**).

N.B.:
SKF linear ball bearings and units for shaft diameter 6 mm and greater are factory prelubricated by default[1)].

[1)] linear ball bearings without factory pre-lubrication and preservative only can be ordered by using the suffix "/VT808", e.g. LBCR 20 A-2LS/VT808.

Table 2

	Type		Basic dynamic load rating	Stiffness	Speed	Precision
Linear ball bearings						
Compact	LBBR					
Standard	LBCR					
	LBCD					
	LBCT					
	LBCF					
	LBHT					
Linear plain bearings						
Compact	LPBR					
Standard	LPAR					
	LPAT					
Shafts						
	LJM		Standard CF 53			
	LJMH		Hard cromium plated			
	LJMR		Corrosion resistant			
	LJT		Hollow			
	LJMS		Corrosion resistant			

Compact series



LBBR
Compact linear ball bearings available in standard or corrosion resistant versions.



LUHR / LUJR
Linear ball bearing units with either integral seals or G-type seals mounted in the housing.

LTBR
Tandem linear ball bearing units with seals.



LTDR
Duo linear ball bearing units with seals.

LQBR
Quadro linear ball bearing units with seals.



LSHS
Shaft blocks for compact series.

LEBS and LEAS
Tandem shaft blocks suitable for LQBR and LQCD.

Standard series



LBCR
Closed linear ball bearings without self-aligning feature.

LBCT
Open linear ball bearings, not self-aligning.

LBHT
Heavy-load linear ball bearings, open type.

N.B.:
All LBC and LBH Linear ball bearings available in corrosion resistant!

LBCD
Self-aligning linear ball bearings, closed type.

LBCF
Self-aligning linear ball bearings, open type.



LUCD / LUCE
Self-aligning linear ball bearing units with adjustable preload.

LUCF
Open self-aligning linear ball bearing units with adjustable preload.



LUCT / BH
Heavy-load linear ball bearing units with adjustable preload.



LUND / LUNE
Self-aligning linear ball bearing units with adjustable preload

LUNF
Self-aligning linear ball bearing units, open type with adjustable preload.



LTCD / LTCF
Open or closed self-aligning tandem linear ball bearing units.



LQCD / LQCF
Open or closed self-aligning quadro linear ball bearing units.

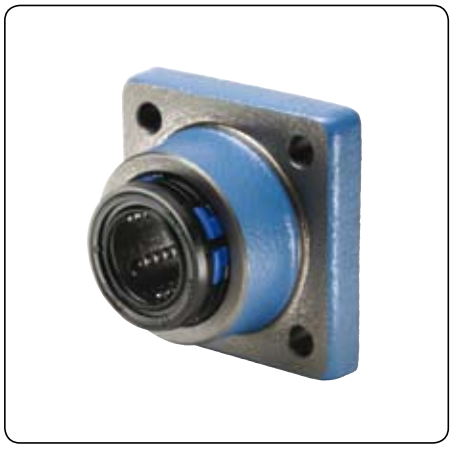

LVCR
Flanged linear ball bearing units.



LSCS
Standard shaft blocks suitable for use with all linear bearing units.

LSNS
Shaft blocks suitable for use with all linear bearing units.

N.B.:
In addition to this catalogue, all product brochures are available on **www.skf.com** *as PDF files.*

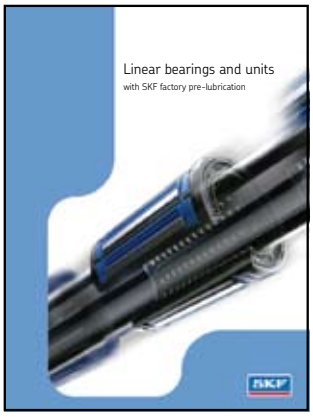

Publication nr. 4182 EN

Table 3

Type	Size	Max load dynamic	static	Comments	ISO serie
	mm	N			
LBBR	3 to 50	6 950	6 300		1
LBCR	5 to 80	37 500	32 000		3
LBCD	12 to 50	11 200	6 950	Self-aligning*	3
LBCT	12 to 80	37 500	32 000		3
LBCF	12 to 50	11 200	6 950	Self-aligning*	3
LBHT	20 to 50	17 300	17 000		3
LPBR	12 to 50	10 800	38 000		1
LPAR	5 to 80	29 000	100 000		3
LPAT	12 to 80	29 000	100 000		3
Linear bearing units					
LUHR	12 to 50	6 950	6 300	LBBR bearing	1
LUJR	12 to 50	6 950	6 300	With shaft seals LBBR bearing	1
LTBR	12 to 50	11 400	12 700	Tandem LBBR bearing	1
LTDR	12 to 50	11 400	12 700	Duo LBBR bearing	1
LQBR	12 to 50	18 600	25 500	Quadro LBBR bearing	1
LUCR	8, 60, 80	37 500	32 000	LBCR bearing	3
LUCD	12 to 50	11 200	6 950	LBCD bearing self-aligning*	3
LUCS	8, 60, 80	37 500	32 000	LBCR bearing	3
LUCE	12 to 50	11 200	6 950	LBCD bearing self-aligning*	3
LUCT	60, 80	37 500	32 000	LBCT bearing	3
LUCF	12 to 50	11 200	6 950	LBCF bearing self-aligning*	3
LUCT ... BH	20 to 50	17 300	17 000	LBHT bearing	3
LUND	12 to 50	11 200	6 950	LBCD bearing self-aligning*	3
LUNE	12 to 50	11 200	6 950	LBCD bearing self-aligning*	3
LUNF	12 to 50	11 200	6 950	LBCF bearing self-aligning*	3
LVCR	12 to 80	37 500	32 000	LBCR bearing	3
LTCD	12 to 50	18 300	14 000	Tandem LBCD bearing self-aligning*	3
LTCF	12 to 50	18 300	14 000	Tandem LBCF bearing self-aligning*	3
LQCR	8	1 290	1 420	Quadro LBCR bearing	3
LQCD	12 to 50	30 000	28 000	Quadro LBCD bearing self-aligning*	3
LQCF	12 to 50	30 000	28 000	Quadro LBCF bearing self-aligning*	3
Shaft blocks					
LSCS	8 to 80				
LSHS	12 to 50			LSHS	1
LSNS	12 to 50			LSNS	3
LEBS A	12 to 50			Tandem LEBS A	1
LEAS ... A/B	8 to 50			LEAS A/B	3
Shafts and shaft supports					
LJ ...	3 to 80				
LRCB	12 to 80			LRCB (holes)	3
LRCC	12 to 80			LRCC (no holes)	
Linear tables					
LZAU	12 to 50			Quadro “supported shaft” LBCF bearing	3
LZBU ... A	8 to 50			Quadro “A” = “moving unit” “A” = “moving unit”	3
LZBU ... B	8 to 50			“B” = “moving shafts” LBCD bearing	

* Automatic compensation of shaft misalignments of up to max. ±30 angular minutes

Linear ball bearings/Linear bearing units

Ordering key

L	B	B	R	4	-2LS/HV6				

Type:

Bearing, units, shaft blocks:

Linear plain bearing	P
Linear ball bearing	B
Single unit, closed design	U
Tandem or duo unit	T
Quadro unit	Q
Shaft block	S
Tandem shaft block	E

Design (for seals on side see table at end page):

For P	(12 - 50)	BR
For B	Closed design (3 - 50)	BR
For U	Non standard (12 - 50)	BR
	Non standard (12 - 50)	ER
	Standard (12 - 50)	HR
	With shaft seals (12 - 50)	JR
	Self-aligning, clearance adjustable, closed design, relubricatable (12- 50)	CE
	Self-aligning, closed design, relubricatable (12 - 50)	ND
	Self-aligning, clearance adjustable, closed design, relubricatable (12- 50)	NE
For T	(12 - 50); tandem unit	BR
	(12 - 50); duo unit	DR
For Q	(12 - 50)	BR
For S	(12 - 50)	HS
For E	(12 - 50)	BS

Nominal diameter:
∅ in mm

Option(s):

Without seals	no sign
One side sealed	-LS
Both sides sealed	2-LS
Only valid for LBBR:	
Without seals, corrosion resistant	/HV6
One side sealed, corrosion resistant	-LS/HV6
Both sides sealed, corrosion resistant	-2LS/HV6
Only valid for LUBR, LUHR	PB
Only valid for LEBS	A

Only valid for LBBR:
Cassettes of 4 pieces for LBBR ∅ 3 - 5 only! (CAS4)

Lubrication option:
Only preservative, no pre-lubrication (∅ 6 - 50) /VT808

Example: L B B R 4 -2LS/HV6

Seals on ... side(s)	LPBR	LBBR	LUBR	LUER	LUHR	LUJR	LUCE	LUND	LUNE	LTBR	LTDR	LQBR	LSHS	LEBS
No	×	×	×	×	×	×	×	×	×	×	×	×	×	×
One	–	×	×	×	×	×	×	×	×	×	×	×	–	–
Both	–	×	×	×	×	×	×	×	×	×	×	×	–	–
Other options	–	/HV6	PB	–	PB	–	–	–	–	–	–	–	–	A

LBBR ..

Compact series 1
Linear ball bearings
LBBR (without seals)
-LS with one seal
-2LS with two seals

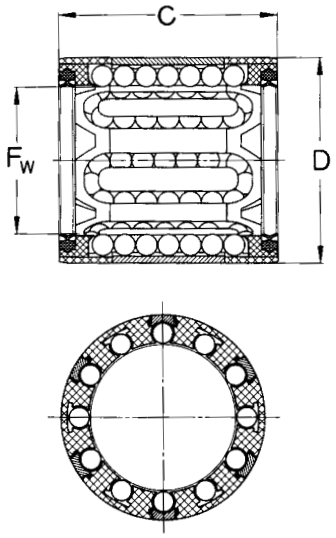

Designations	Dimensions			Basic load ratings dynamic	static
	F_w	D	C	C	C_0
	mm			N	
LBBR 3 (CAS4)*	3	7	10	60	44
LBBR 4 (CAS4)*	4	8	12	75	60
LBBR 5 (CAS4)*	5	10	15	170	129
LBBR 6A	6	12	22[1)]	335	270
LBBR 8	8	15	24	490	355
LBBR 10	10	17	26	585	415
LBBR 12	12	19	28	695	510
LBBR 14	14	21	28	710	530
LBBR 16	16	24	30	930	630
LBBR 20	20	28	30	1 160	800
LBBR 25	25	35	40	2 120	1 560
LBBR 30	30	40	50	3 150	2 700
LBBR 40	40	52	60	5 500	4 500
LBBR 50	50	62	70	6 950	6 300

Example:
LBBR 4 (CAS4)
LBBR 20-LS
LBBR 50-2LS

* Without seal, 4 pieces, packed in cassette (only valid for sizes 3, 4, 5)
[1)] Width 22 does not correspond to series 1 in ISO standard 10285

LBBR .. /HV6

Compact series 1
Corrosion resistant bearings
/HV6 without seals
-2LS/HV6 with two seals

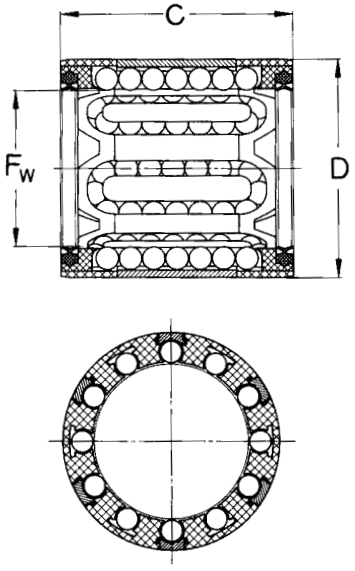

Designations	Dimensions			Basic load ratings dynamic	static
	F_w	D	C	C	C_0
	mm			N	
LBBR 3/HV6 (CAS 4)*	3	7	10	60	44
LBBR 4/HV6 (CAS 4)*	4	8	12	75	60
LBBR 5/HV6 (CAS 4)*	5	10	15	170	129
LBBR 6A/HV6	6	12	22[1)]	335	270
LBBR 8/HV6	8	15	24	490	355
LBBR 10/HV6	10	17	26	585	415
LBBR 12/HV6	12	19	28	695	510
LBBR 14/HV6	14	21	28	710	530
LBBR 16/HV6	16	24	30	930	630
LBBR 20/HV6	20	28	30	1 160	800
LBBR 25/HV6	25	35	40	2 120	1 560
LBBR 30/HV6	30	40	50	3 150	2 700
LBBR 40/HV6	40	52	60	5 500	4 500
LBBR 50/HV6	50	62	70	6 950	6 300

Example:
LBBR 4/HV6 (CAS4)
LBBR 50-2LS/HV6

* Without seal, 4 pieces, packed in cassette (only valid for sizes 3, 4, 5)
[1)] Width 22 does not correspond to series 1 in ISO standard 10285

LPBR

Linear plain bearings

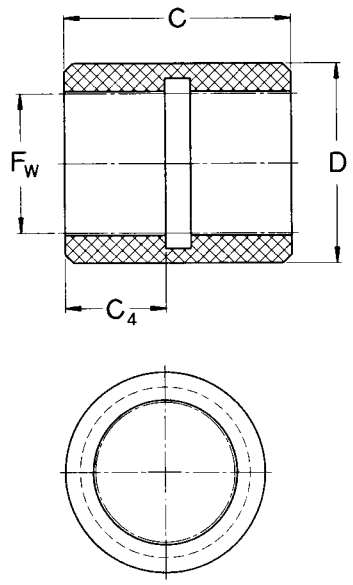

Designations	Dimensions				Basic load ratings dynamic		static
	F_w	D	C	C_4	C 0,1 m/s	C 4 m/s	C_0
	mm				N		
LPBR 12	12	19,19	28	10	965	24	3 350
LPBR 16	16	24,23	30	12	1 530	38	5 400
LPBR 20	20	28,24	30	13	2 080	52	7 350
LPBR 25	25	35,25	40	17	3 400	85	12 000
LPBR 30	30	40,27	50	20	4 800	120	17 000
LPBR 40	40	52,32	60	24	7 650	193	27 000
LPBR 50	50	62,35	70	27	10 800	270	38 000

LUHR ..

Linear ball bearing units
LUHR (without seals)
-2LS with 2 seals

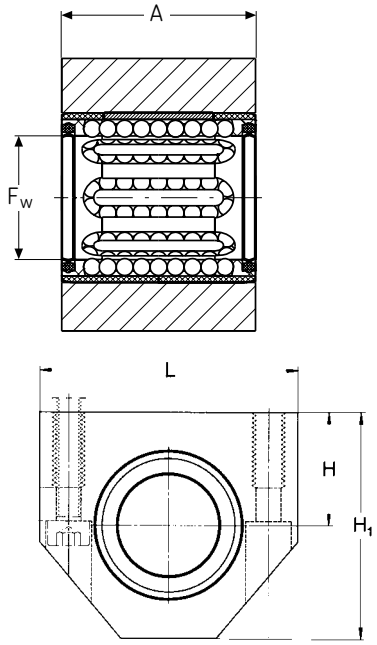

Designations	Dimensions					Basic load ratings dynamic	static
	F_w	D	C	H ±0,01	H_1	C	C_0
	mm					N	
LUHR 12	12	28	17	33	40	695	510
LUHR 16	16	30	19	38	45	930	630
LUHR 20	20	30	23	45	53	1 160	800
LUHR 25	25	40	27	54	62	2 120	1 560
LUHR 30	30	50	30	60	67	3 150	2 700
LUHR 40	40	60	39	76	87	5 500	4 500
LUHR 50	50	70	47	92	103	6 950	6 300

Example:
LUHR 16
LUHR 30-2LS

LUHR .. PB

Linear plain bearing units without seals

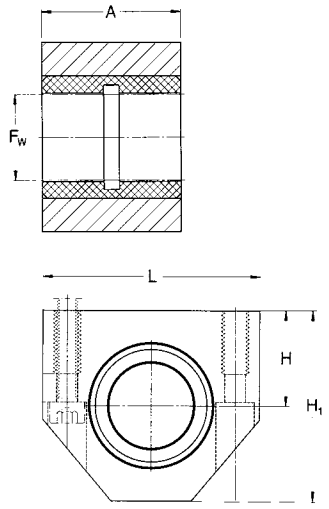

Designations	Dimensions					Basic load ratings dynamic		static
	F_w	A	H ±0,01	H_1	L	C 0,1 m/s	C 4 m/s	C_0
	mm					N		
LUHR 12 PB	12	28	17	33	40	965	24	3 350
LUHR 16 PB	16	30	19	38	45	1 530	38	5 400
LUHR 20 PB	20	30	23	45	53	2 080	52	7 350
LUHR 25 PB	25	40	27	54	62	3 400	85	12 000
LUHR 30 PB	30	50	30	60	67	4 800	120	17 000
LUHR 40 PB	40	60	39	76	87	7 650	193	27 000
LUHR 50 PB	50	70	47	92	103	10 800	270	38 000

LUJR

Linear ball bearing units with shaft seals

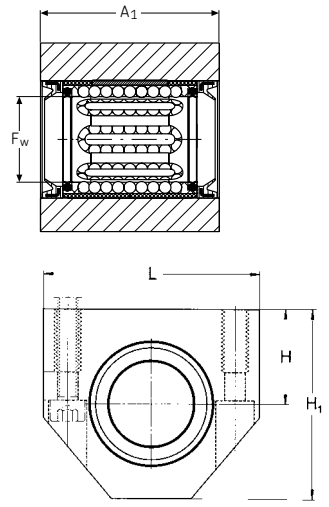

Designations	Dimensions					Basic load ratings dynamic	static
	F_w	A	H ±0,01	H_1	L	C	C_0
	mm					N	
LUJR 12	12	35	17	33	40	695	510
LUJR 16	16	37	19	38	45	930	630
LUJR 20	20	39	23	45	53	1 160	800
LUJR 25	25	49	27	54	62	2 120	1 560
LUJR 30	30	59	30	60	67	3 150	2 700
LUJR 40	40	71	39	76	87	5 500	4 500
LUJR 50	50	81	47	92	103	6 950	6 300

LTBR ..

Tandem linear ball bearing units
LTBR (without seals)
-2LS with two seals

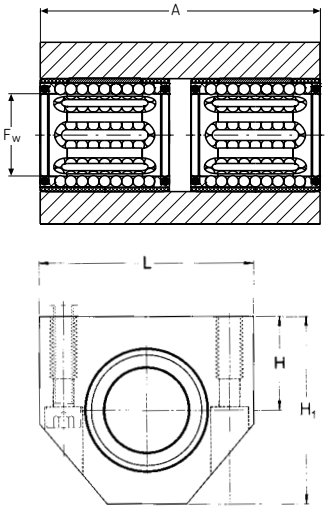

Designations	Dimensions					Basic load ratings dynamic	static
	F_w	A	H ±0,01	H_1	L	C	C_0
	mm					N	
LTBR 12	12	60	17	33	40	1 140	1 020
LTBR 16	16	65	19	38	45	1 530	1 270
LTBR 20	20	65	23	45	53	1 900	1 600
LTBR 25	25	85	27	54	62	3 450	3 150
LTBR 30	30	105	30	60	67	5 200	5 400
LTBR 40	40	125	39	76	87	9 000	9 000
LTBR 50	50	145	47	92	103	11 400	12 700

Example:
LTBR 16
LTBR 30-2LS

LSHS

Shaft block for compact series

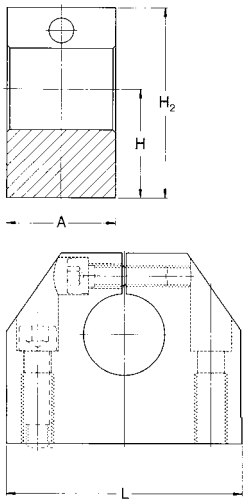

Designations	Dimensions				
	F_w	A	H ±0,01	H_2	L
	mm				
LSHS 12	12	18	19	33	40
LSHS 16	16	20	22	38	45
LSHS 20	20	24	25	45	53
LSHS 25	25	28	31	54	62
LSHS 30	30	30	34	60	67
LSHS 40	40	40	42	76	87
LSHS 50	50	50	50	92	103

LTDR

Duo linear ball bearing units
LTDR (without seals)
-2LS with four seals

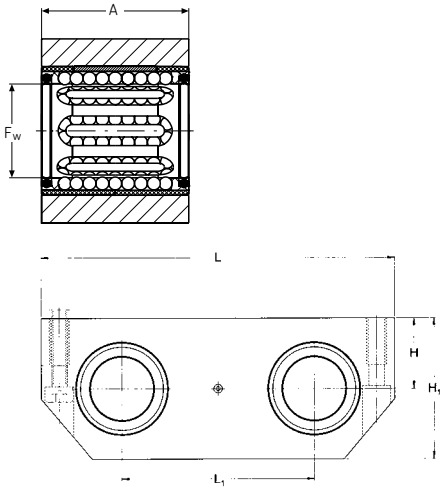

Designations	Dimensions						Basic load ratings dynamic	static
	F_w	A	H ±0,01	H_1	L	L_1	C	C_0
	mm						N	
LTDR 12	12	28	15	30	80	40	1 140	1 020
LTDR 16	16	30	17.5	35	96	52	1 530	1 270
LTDR 20	20	30	20	40	115	63	1 900	1 600
LTDR 25	25	40	25	50	136	75	3 450	3 150
LTDR 30	30	50	28	56	146	80	5 200	5 400
LTDR 40	40	60	35	70	184	97	9 000	9 000
LTDR 50	50	70	40	80	210	107	11 400	12 700

Example:
LTDR 12
LTDR 25-2LS

LQBR

Quadro linear ball bearing units
LQBR (without seals)
-2LS with four seals

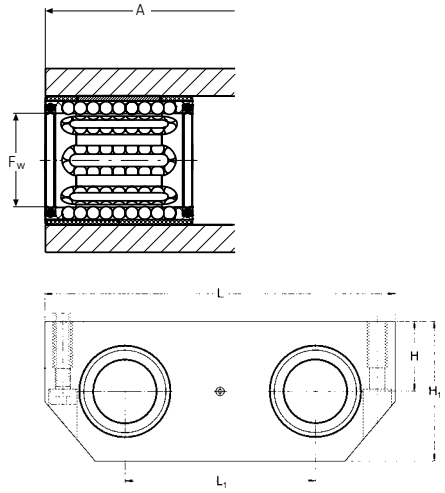

Designations	Dimensions						Basic load ratings dynamic	static
	F_w	A	H ±0,01	H_1	L	L_1	C	C_0
	mm						N	
LQBR 12	12	70	15	30	80	40	1 860	2 040
LQBR 16	16	80	17.5	35	96	52	2 500	2 550
LQBR 20	20	85	20	40	115	63	3 100	3 200
LQBR 25	25	100	25	50	136	75	5 600	6 300
LQBR 30	30	130	28	56	146	80	8 500	10 800
LQBR 40	40	150	35	70	184	97	14 600	18 000
LQBR 50	50	175	40	80	210	107	18 600	25 500

Example:
LQBR 40
LQBR 30-2LS

LEBS

Tandem shaft blocks suitable for LQBR and LTDR

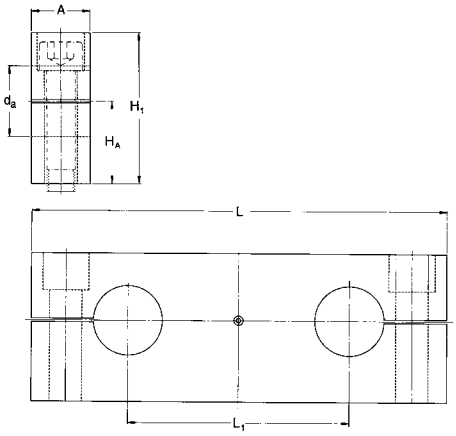

Designations	Dimensions					
	D_a	A	H_A ±0,01	H_1	L	L_1
	mm					
LEBS 12 A	12	15	17	30	80	40
LEBS 16 A	16	15	19,5	35	96	52
LEBS 20 A	20	18	22	40	115	63
LEBS 25 A	25	20	27	50	136	75
LEBS 30 A	30	20	31	56	146	80
LEBS 40 A	40	25	38	70	184	97
LEBS 50 A	50	30	43	80	210	107

Appropriate special seals

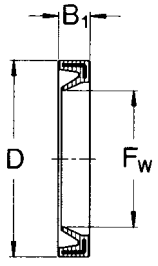

Designations	Dimensions		
	F_W	D	B_1
	mm		
SP-6×12×2	6	22	2
SP-8×15×3	8	15	3
SP-10×17×3	10	17	3
SP-12×19×3	12	19	3
SP-14×21×3	14	21	3
SP-16×24×3	16	24	3
SP-20×28×4	20	28	4
SP-25×35×4	25	35	4
SP-30×40×4	30	40	4
SP-40×52×5	40	52	5
SP-50×62×5	50	62	5

Ordering key

L | | | | | | | |

Type

Bearing, units, shaft blocks:

Linear plain bearing	P
Linear ball bearing	B
Single unit	U
Flanged unit	V
Tandem unit	T
Quadro unit	Q
Shaft block	S
Tandem shaft block	E
Shaft support	R

Design (for seals on side see table at end page):

For P	Closed design (5 - 80)	AR
	Open design (12 - 80)	AT
For B*	Self-aligning, closed design (12 - 50)	CD
	Self-aligning, open design (12 - 50)	CF
	Closed design (5 - 80)	CR
	Open design (12 - 80)	CT
	Heavy load, open design (20 - 50)	HT
For U	Self-aligning, closed design, relubricatable (12 - 50)	CD
	Self-aligning, radial adjustable, slotted design, relubricatable (12 - 50)	CE
	Self-aligning, clearance adjustable, open design, relubricatable (12 - 50)	CF
	Closed design, (relubricatable) (8 - 80)	CR
	Clearance adjustable, closed design, relubricatable (8 - 80)	CS
	Clearance adjustable, open design, relubricatable (12 - 80)	CT
	Self-aligning, clearance adjustable, closed design, relubricatable (12 - 50)	ND
	Self-aligning, clearance adjustable, slotted design, relubricatable (12 - 50)	NE
	Self-aligning, clearance adjustable, open design, relubricatable (12 - 50)	NF

Nominal diameter:
∅ in mm

New bearing series* (for linear ball bearings only) A

Option(s):

Without seals	no sign
One side sealed	-LS
Both sides sealed	-2LS
For B* Without seals, corrosion resistant (for linear ball bearings only)	/HV6
For B* One side sealed, corrosion resistant (for linear ball bearings only)	-LS/HV6
For B* Both sides sealed, corrosion resistant (for linear ball bearings only)	-2LS/HV6

Other option:

Only valid for LUCR, LUCT:	
With plain bearing, without seals	PA
Only valid for LUCT:	
With heavy-load bearing, without seals	BH
With heavy-load bearing, both sides sealed	BH-2LS
Only valid for LEAS:	
Tandem shaft block, high shaft position	A
Tandem shaft block, low shaft position	B

Lubrication option:
only preservative, no pre-lubrication (∅ 6 - 50) /VT808

Example: L | U | C | T | 30 | | BH-2LS |

Seals on ... side(s)	LPAR	LPAT	LBCD	LBCF	LBCR	LBCT	LBHT	LUCD	LUCE	LUCF	LUCR	LUCS	LUCT	LUND	LUNE	LUNF
No	×	×	×	×	×	×	×	×	×	×	×	×	×	×	×	×
One	–	–	×	×	×	×	×	×	×	×	×	×	×	×	×	×
Both	–	–	×	×	×	×	×	×	×	×	×	×	×	×	×	×
Other options	–	–	–	–	–	–	–	–	–	–	PA	–	BH or PA	–	–	–

Ordering key (Continued)



Type

Bearing, units, shaft blocks:

Linear plain bearing	P
Linear ball bearing	B
Single unit	U
Flanged unit	V
Tandem unit	T
Quadro unit	Q
Shaft block	S
Tandem shaft block	E
Shaft support	R

Design (for seals on side see table at end page):

For V	Self-aligning, closed design (12 - 50)	CD
	Closed design (12 - 80)	CR
For T	Self-aligning, closed design, relubricatable (12 - 50)	CD
	Self-aligning, open design, relubricatable (12 - 50)	CF
	Closed design, relubricatable (12 - 50)	CR
	Open design, relubricatable (12 - 50)	CT
For Q	Self-aligning, closed design, relubricatable (12 - 50)	CD
	Self-aligning, open design, relubricatable (12 - 50)	CF
	Closed design, relubricatable (8 - 50)	CR
	Open design, relubricatable (12 - 50)	CT
For S	(8 - 80)	CS
	(12 - 50)	NS
For E	(8 - 50)	AS
For R	Without bore holes (12 - 80)	CB
	With bore holes (12 - 80)	CC

Nominal diameter:
∅ in mm

Option(s):

Without seals	no sign
One side sealed	-LS
Both sides sealed	-2LS

Other option:

Only valid for LUCR, LUCT:	
With plain bearing, without seals	PA
Only valid for LUCT:	
With heavy-load bearing, without seals	BH
With heavy-load bearing, both sides sealed	BH-2LS
Only valid for LEAS:	
Tandem shaft block, high shaft position	A
Tandem shaft block, low shaft position	B

Lubrication option:
only preservative, no pre-lubrication (∅ 6 - 50) /VT808

Example: L Q C R 16 -2LS

Seals on ... side(s)	LVCD	LVCR	LTCD	LTCF	LTCR	LTCT	LQCD	LQCF	LQCR	LQCT	LSCS	LSNS	LEAS	LRCB	LRCC	LUNF
No	×	×	×	×	×	×	×	×	×	×	×	×	×	×	×	×
One	×	×	×	×	×	×	×	×	×	×	–	–	–	–	–	×
Both	×	×	×	×	×	×	×	×	×	×	–	–	–	–	–	×
Other options	–	–	–	–	–	–	–	–	–	–	–	–	B or A	–	–	–

LBCD ..

Standard series 3
Linear ball bearings self-aligning, closed type
LBCD ..A (without seals)
-LS with one seal
-2LS with two seals

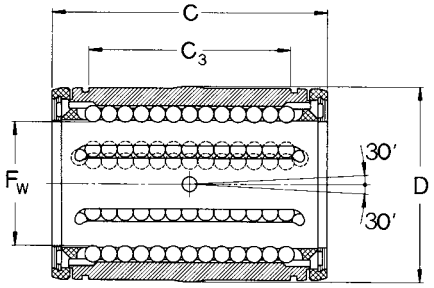

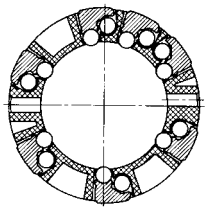

Designations	Dimensions				Basic load ratings dynamic	static
	F_w	D	C	C_3	C	C_0
	mm				N	
LBCD 12 A	12	22	32	20	1 080	815
LBCD 16 A	16	26	36	22	1 320	865
LBCD 20 A	20	32	45	28	2 000	1 370
LBCD 25 A	25	40	58	40	2 900	2 040
LBCD 30 A	30	47	68	48	4 650	3 250
LBCD 40 A	40	62	80	56	7 800	5 200
LBCD 50 A	50	75	100	72	11 200	6 950

Example:
LBCD 25 A
LBCD 16 A-LS
LBCD 40 A-2LS

LBCR ..

Standard series 3
Linear ball bearings, closed type
LBCR .. A (without seals)
-LS with one seal
-2LS with two seals

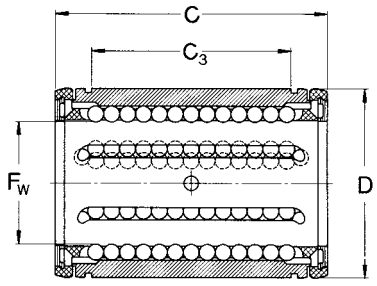

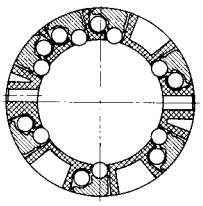

Designations	Dimensions				Basic load ratings dynamic	static
	F_w	D	C	C_3	C	C_0
	mm				N	
LBCR 5 A	5	22	22	12	280	210
LBCR 8 A	8	16	25	14	490	355
LBCR 12 A	12	22	32	20	1 160	980
LBCR 16 A	16	26	36	22	1 500	1 290
LBCR 20 A	20	32	45	28	2 240	2 040
LBCR 25 A	25	40	58	40	3 350	3 350
LBCR 30 A	30	47	68	48	5 600	5 700
LBCR 40 A	40	62	80	56	9 000	8 150
LBCR 50 A	50	75	100	72	13 400	12 200
LBCR 60 A	60	90	125	95	20 400	18 000
LBCR 80 A	80	120	165	125	37 500	32 000

Example:
LBCR 30 A
LBCR 80 A-LS
LBCR 60 A-2LS

N.B.:
All LBC.. A and LBH .. A Linear ball bearings available in corrosion resistant!

LPAR ..

Linear plain bearings without seals, closed type

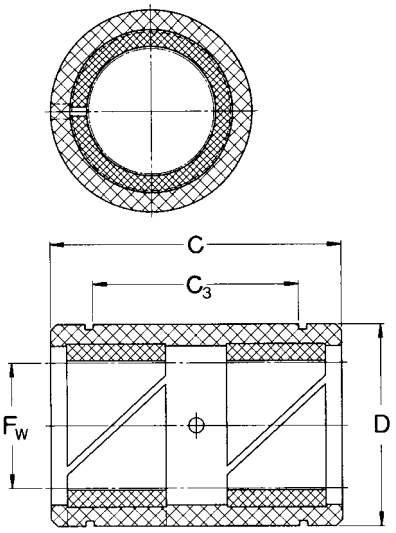

Designations	Dimensions				Basic load ratings dynamic		static
	F_w	D	C	C_3	C 0,1 m/s	C 4 m/s	C_0
	mm				N		
LPAR 5	5	22	22	12	280	7	980
LPAR 8	8	16	25	14	510	13	1 800
LPAR 12	12	22	32	20	965	24	3 350
LPAR 16	16	26	36	22	1 530	38	5 400
LPAR 20	20	32	45	28	2 400	60	8 300
LPAR 25	25	40	58	40	4 000	100	14 000
LPAR 30	30	47	68	48	5 500	137	19 300
LPAR 40	40	62	80	56	8 000	200	28 000
LPAR 50	50	75	100	72	12 000	300	41 500
LPAR 60	60	90	125	95	16 600	415	60 000
LPAR 80	80	120	165	125	290 000	720	100 000

LUCD ..

Single units, self-aligning, closed type, relubricatable
LUCD (without seals)
-2LS with two seals

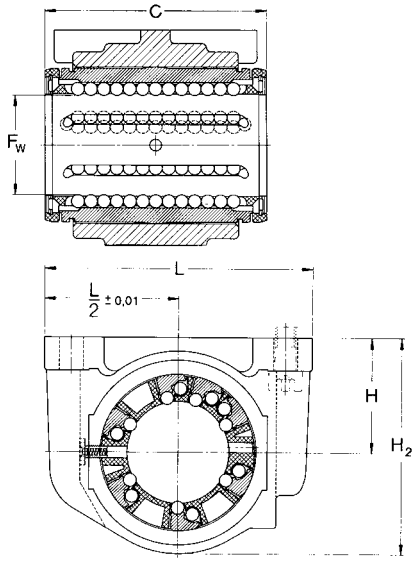

Designations	Dimensions					Basic load ratings dynamic	static
	F_w	C	H ±0,01	H_2	L	C	C_0
	mm					N	
LUCD 12	12	32	18	34.5	52	1 080	815
LUCD 16	16	36	22	40.5	56	1 320	865
LUCD 20	20	45	25	48	70	2 000	1 370
LUCD 25	25	58	30	58	80	2 900	2 040
LUCD 30	30	68	35	67	88	4 650	3 250
LUCD 40	40	80	45	85	108	7 800	5 200
LUCD 50	50	100	50	99	135	11 200	6 950

Example:
LUCD 40
LUCD 12-2LS

LUCE ..

Single units, self-aligning, clearance adjustable, closed type, relubricatable
LUCE (without seals)
-2LS with two seals

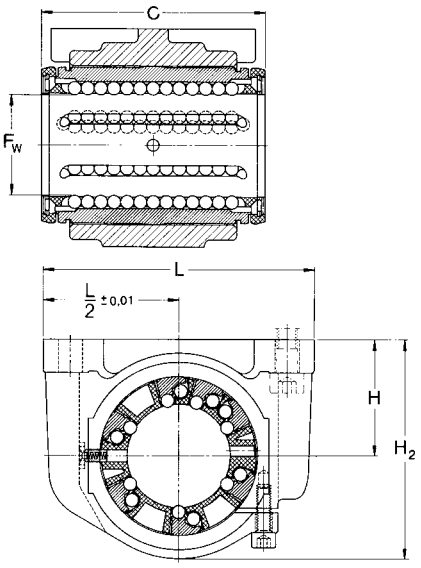

Designations	Dimensions					Basic load ratings dynamic	static
	F_w	C	H ±0,01	H_2	L	C	C_0
	mm					N	
LUCE 12	12	32	18	34,5	52	1 080	815
LUCE 16	16	36	22	40,5	56	1 320	865
LUCE 20	20	45	25	48	70	2 000	1 370
LUCE 25	25	58	30	58	80	2 900	2 040
LUCE 30	30	68	35	67	88	4 650	3 250
LUCE 40	40	80	45	85	108	7 800	5 200
LUCE 50	50	100	50	99	135	11 200	6 950

Example:
LUCE 25
LUCE 50-2LS

LUCR ..

Single units, closed type, relubricatable
LUCR (without seals)
-2LS with two seals

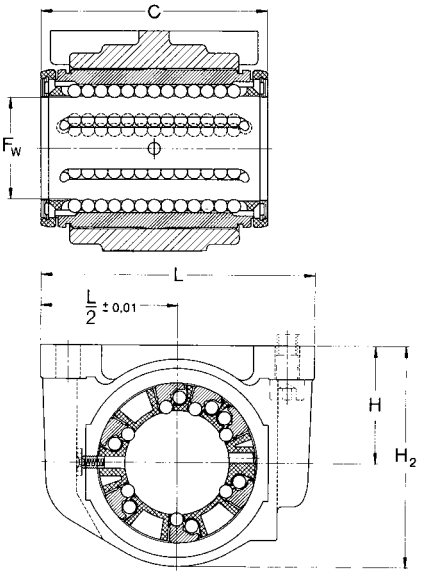

Designations	Dimensions					Basic load ratings dynamic	static
	F_w	C	H ±0,01	H_2	L	C	C_0
	mm					N	
LUCR 8*	8	25	15	28	45	365	285
LUCR 12	12	32	18	34,5	52	1 080	815
LUCR 16	16	36	22	40,5	56	1 320	865
LUCR 20	20	45	25	48	70	2 000	1 370
LUCR 25	25	58	30	58	80	2 900	2 040
LUCR 30	30	68	35	67	88	4 650	3 250
LUCR 40	40	80	45	85	108	7 800	5 200
LUCR 50	50	100	50	99	135	11 200	6 950
LUCR 60	60	125	60	118	560	20 400	18 000
LUCR 80	80	165	80	158	205	37 500	32 000

Example:
LUCR 80
LUCR 8-2LS

* Linear ball bearings fitted to these units are secured with snap rings according to DIN 471 and cannot be relubricated.

LUCR .. PA

Single plain bearing units without seals, closed type

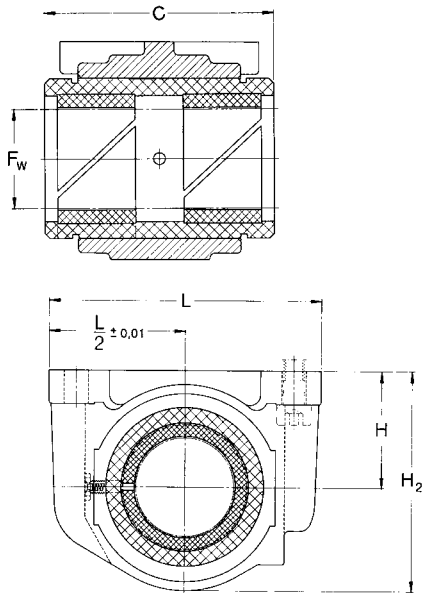

Designations	Dimensions					Basic load ratings dynamic		static
	F_w	C	H ±0,01	H_2	L	C 0,1 m/s	C 4 m/s	C_0
	mm					N		
LUCR 8 PA	8	25	15	28	45	510	13	1 800
LUCR 12 PA	12	32	18	34,5	52	965	24	3 350
LUCR 16 PA	16	36	22	40,5	56	1 530	38	5 400
LUCR 20 PA	20	45	25	48	70	2 400	60	8 300
LUCR 25 PA	25	58	30	58	80	4 000	100	14 000
LUCR 30 PA	30	68	35	67	88	5 500	137	19 300
LUCR 40 PA	40	80	45	85	108	8 000	200	28 000
LUCR 50 PA	50	100	50	99	135	12 000	300	41 500
LUCR 60 PA	60	125	60	118	160	16 600	415	60 000
LUCR 80 PA	80	165	80	158	205	29 000	720	100 000

Delivery time on request

LUCS ..

Single units, clearance adjustable, closed type, relubricatable
LUCS (without seals)
-2LS with two seals

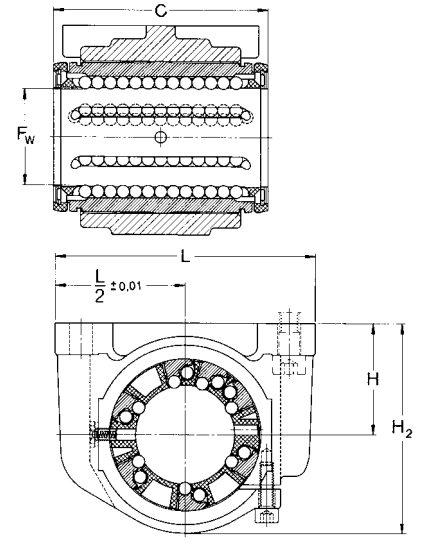

Designations	Dimensions					Basic load ratings dynamic	static
	F_w	C	H ±0,01	H_2	L	C	C_0
	mm					N	
LUCS 8*	8	25	15	28	45	490	355
LUCS 12	12	32	18	34,5	52	1 160	980
LUCS 16	16	36	22	40,5	56	1 500	1 290
LUCS 20	20	45	25	48	70	2 240	2 040
LUCS 25	25	58	30	58	80	3 350	3 350
LUCS 30	30	68	35	67	88	5 600	5 700
LUCS 40	40	80	45	85	108	9 000	8 150
LUCS 50	50	100	50	99	135	13 400	12 200
LUCS 60	60	125	60	118	160	20 400	18 000
LUCS 80	80	165	80	158	205	37 500	32 000

Example:
LUCS 50
LUCS 60-2LS

* Linear ball bearings fitted to these units are secured with snap rings according to DIN 471 and cannot be relubricated.

LUND ..

Single units, self-aligning, closed type, relubricatable
LUND (without seals)
-2LS with two seals

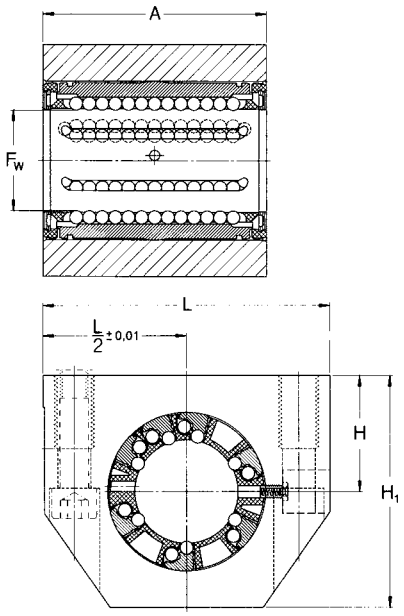

Designations	Dimensions					Basic load ratings dynamic	static
	F_w	A	H ±0,01	H_1	L	C	C_0
	mm					N	
LUND 12	12	32	18	35	43	1 080	815
LUND 16	16	37	22	42	53	1 320	865
LUND 20	20	45	25	50	60	2 000	1 370
LUND 25	25	58	30	61	78	2 900	2 040
LUND 30	30	68	35	70	87	4 650	3 250
LUND 40	40	80	45	90	108	7 800	5 200
LUND 50	50	100	50	105	132	11 200	6 950

Example:
LUND 12
LUND 30-2LS

LUNE ..

Single units, self-aligning, clearance adjustable, closed type, relubricatable
LUNE (without seals)
-2LS with two seals

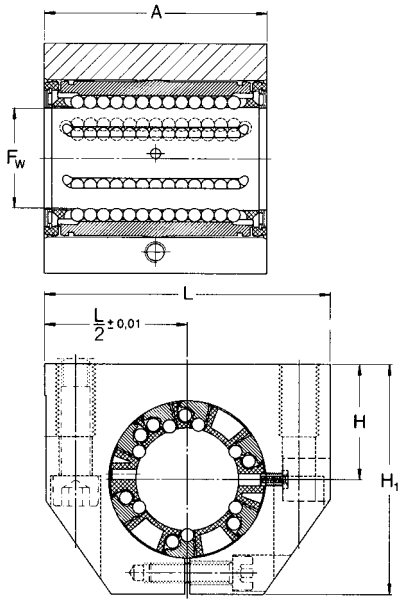

Designations	Dimensions					Basic load ratings dynamic	static
	F_w	A	H ±0,01	H_1	L	C	C_0
	mm					N	
LUNE 12	12	32	18	35	43	1 080	815
LUNE 16	16	37	22	42	53	1 320	865
LUNE 20	20	45	25	50	60	2 000	1 370
LUNE 25	25	58	30	61	78	2 900	2 040
LUNE 30	30	68	35	70	87	4 650	3 250
LUNE 40	40	80	45	90	108	7 800	5 200
LUNE 50	50	100	50	105	132	11 200	6 950

Example:
LUNE 40
LUNE 16-2LS

LVCD ..

Flanged self-aligning units
LVCD (without seals)
-2LS with two seals

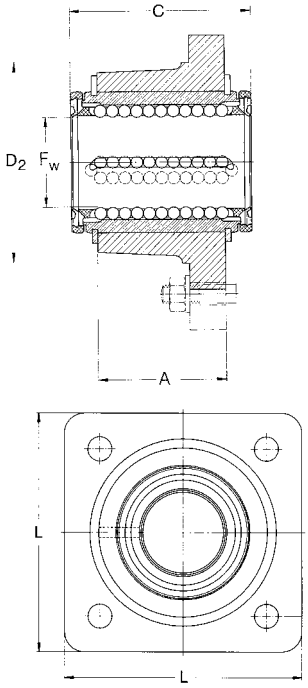

Designations	Dimensions					Basic load ratings dynamic	static
	F_w	A	C	L	D_2	C	C_0
	mm					N	
LVCD 12	12	20	32	42	32	1 080	815
LVCD 16	16	22	36	50	38	1 320	865
LVCD 20	20	28	45	60	46	2 000	1 370
LVCD 25	25	40	58	74	58	2 900	2 040
LVCD 30	30	48	68	84	66	4 650	3 250
LVCD 40	40	56	80	108	90	7 800	5 200
LVCD 50	50	72	100	130	110	11 200	6 950

Example:
LVCD 12
LVCD 30-2LS

LVCR ..

Flanged units
LVCR (without seals)
-2LS with two seals

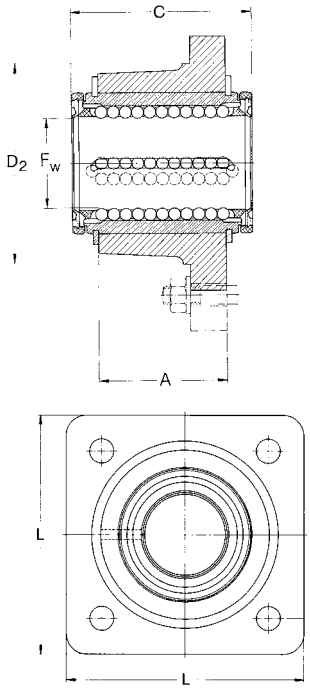

Designations	Dimensions					Basic load ratings dynamic	static
	F_w	A	C	L	D_2	C	C_0
	mm					N	
LVCR 12	12	20	32	42	32	1 160	980
LVCR 16	16	22	36	50	38	1 500	1 290
LVCR 20	20	28	45	60	46	2 240	2 040
LVCR 25	25	40	58	74	58	3 350	3 350
LVCR 30	30	48	68	84	66	5 600	5 700
LVCR 40	40	56	80	108	90	9 000	8 150
LVCR 50	50	72	100	130	110	13 400	12 200
LVCR 60	60	95	125	160	135	20 400	18 000
LVCR 80	80	125	165	200	180	37 500	32 000

Example:
LVCR 20
LVCR 60-2LS

Delivery time on request

LSCS

Shaft blocks

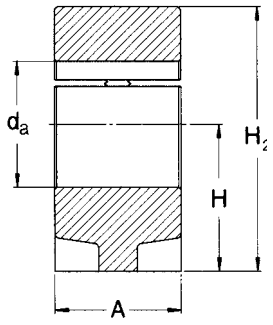

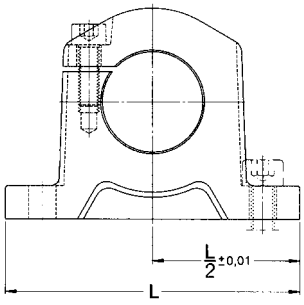

Designations	Dimensions				
	F_w	A	H ±0,01	H_2	L
	mm				
LSCS 8	8	10	15	25	45
LSCS 12	12	12	20	32,5	52
LSCS 16	16	15	20	35,5	56
LSCS 20	20	20	25	43,5	70
LSCS 25	25	28	30	53	80
LSCS 30	30	30	35	63	88
LSCS 40	40	36	45	81	108
LSCS 50	50	49	50	92,5	135
LSCS 60	60	62	60	112	160
LSCS 80	80	85	80	147,5	205

LSNS

Shaft blocks

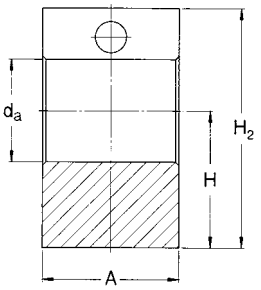

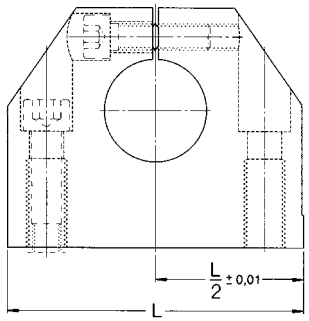

Designations	Dimensions				
	F_w	A	H ±0,01	H_2	L
	mm				
LSNS 12	12	20	20	35	43
LSNS 16	16	24	25	42	53
LSNS 20	20	30	30	50	60
LSNS 25	25	38	35	61	78
LSNS 30	30	40	40	70	87
LSNS 40	40	48	50	90	108
LSNS 50	50	58	60	105	132

LTCD ..

Tandem units, self-aligning, closed type, relubricatable
LTCD (without seals)
-2LS with two seals

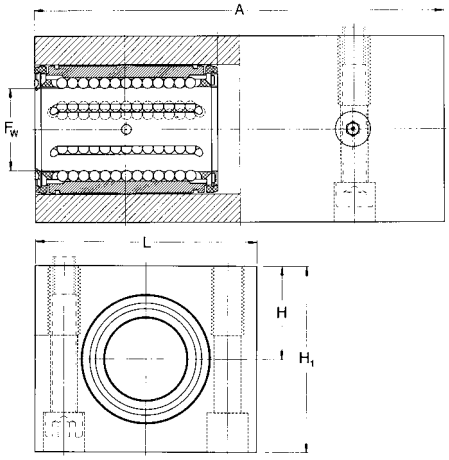

Designations	Dimensions					Basic load ratings dynamic	static
	F_w	A	H ±0,01	H_1	L	C	C_0
	mm					N	
LTCD 12	12	76	18	35	42	1 760	1 630
LTCD 16	16	84	22	41,5	50	2 160	1 730
LTCD 20	20	104	25	49,5	60	3 200	2 750
LTCD 25	25	130	30	59,5	74	4 750	4 150
LTCD 30	30	152	35	69,5	84	7 500	6 550
LTCD 40	40	176	45	89,5	108	12 700	10 400
LTCD 50	50	224	50	99,5	130	18 300	14 000

Example:
LTCD 30
LTCD 12-2LS

LTCR ..

Tandem units, closed type, relubricatable
LTCR (without seals)
-2LS with two seals

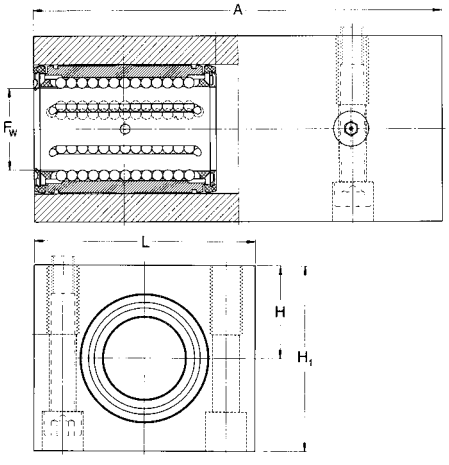

Designations	Dimensions					Basic load ratings dynamic	static
	F_w	A	H ±0,01	H_1	L	C	C_0
	mm					N	
LTCR 12	12	76	18	35	42	1 900	1 960
LTCR 16	16	84	22	41,5	50	2 450	2 600
LTCR 20	20	104	25	49,5	60	3 650	4 150
LTCR 25	25	130	30	59,5	74	5 500	6 700
LTCR 30	30	152	35	69,5	84	9 150	11 400
LTCR 40	40	176	45	89,5	108	15 000	16 300
LTCR 50	50	224	50	99,5	130	22 000	24 500

Example:
LTCR 50
LTCR 20-2LS

LQCD ..

Quadro units, self-aligning, closed type, relubricatable
LQCD (without seals)
-2LS with four seals

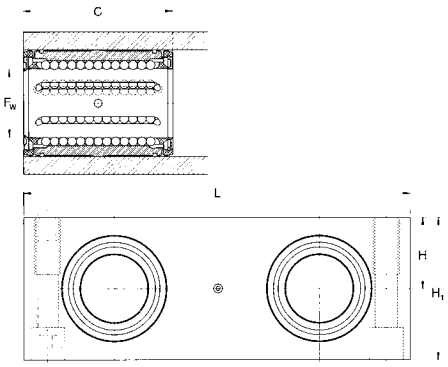

Designations	Dimensions					Basic load ratings dynamic	static
	F_w	A	H ±0,01	H_1	L	C 0,1 m/s	C_0
	mm					N	
LQCD 12	12	32	16	32	85	2 850	3 250
LQCD 16	16	36	18	36	100	3 450	3 450
LQCD 20	20	45	23	46	130	5 200	5 500
LQCD 25	25	58	28	56	160	7 650	8 150
LQCD 30	30	68	32	64	180	12 200	12 900
LQCD 40	40	80	40	80	230	20 800	20 800
LQCD 50	50	100	48	96	280	30 000	28 000

Example:
LQCD 40
LQCD 16-2LS

LQCR ..

Quadro units, closed type, relubricatable
LQCR (without seals)
-2LS with four seals

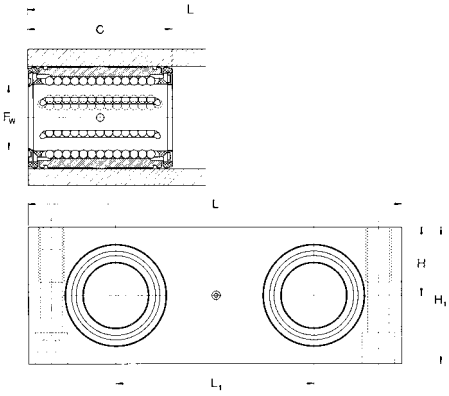

Designations	Dimensions						Basic load ratings dynamic	static
	F_w	C	H ±0,01	H_1	L	L_1	C	C_0
	mm						N	
LQCR 8	8	25	11,5	23	65	32	1 290	1 420
LQCR 12	12	32	16	32	85	42	3 100	4 000
LQCR 16	16	36	18	36	100	54	4 000	5 200
LQCR 20	20	45	23	46	130	72	6 000	8 300
LQCR 25	25	58	28	56	160	88	9 000	13 400
LQCR 30	30	68	32	64	180	96	14 800	22 800
LQCR 40	40	80	40	80	230	122	23 800	32 600
LQCR 50	50	100	48	96	280	152	35 400	48 800

Example:
LQCR 25
LQCR 12-2LS

LEAS ..

Tandem shaft blocks, closed type, suitable for LQCD / LQCR
LEAS .. A high shaft position

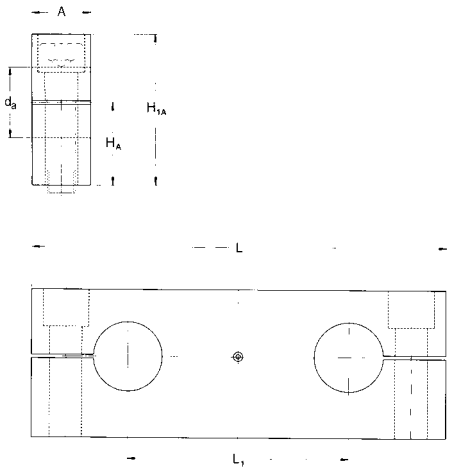

LEAS .. B low shaft position

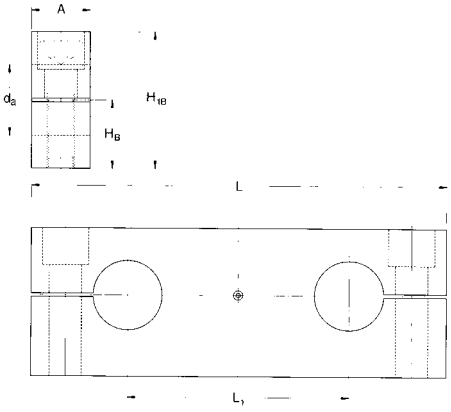

Designations	Dimensions for types A and B				for type A		for type B	
	d_a	A	L	L_1	H_A ±0,015	H_{1A}	H_B ±0,015	H_{1B}
	mm				N			
LEAS 8	8	12	65	32	12,5	23	11	22
LEAS 12	12	15	85	42	18	32	14	28
LEAS 16	16	18	100	54	20	37	17	34
LEAS 20	20	20	130	72	25	46	21	42
LEAS 25	25	25	160	88	30	56	26	52
LEAS 30	30	25	180	96	35	64	29	58
LEAS 40	40	30	230	122	44	80	36	72
LEAS 50	50	30	280	152	52	96	44	88

Example:
LEAS 50 A
LEAS 30 B

LBCF ..

Standard series 3
Linear ball bearings, self-aligning, open type
LBCF..A (without seals)
-LS with one seal
-2LS with two seals

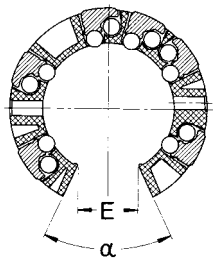

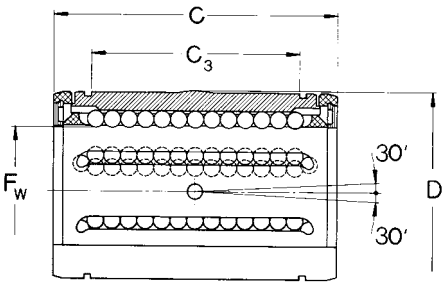

Designations	Dimensions						Basic load ratings dynamic	static
	F_w	D	C	C_3	E	α	C	C_0
	mm					deg.	N	
LBCF 12 A	12	22	32	20	7,6	78	1 080	815
LBCF 16 A	16	26	36	22	10,4	78	1 320	865
LBCF 20 A	20	32	45	28	10,8	60	2 000	1 370
LBCF 25 A	25	40	58	40	13,2	60	2 900	2 040
LBCF 30 A	30	47	68	48	14,2	50	4 650	3 250
LBCF 40 A	40	62	80	56	18,7	50	7 800	5 200
LBCF 50 A	50	75	100	72	23,6	50	11 200	6 950

Example:
LBCF40 A
LBCF 25 A-LS
LBCF 16 A-2LS

LBCT ..

Standard series 3
Linear ball bearings, open type
LBCT.. A (without seals)
-LS with one seal
-2LS with two seals

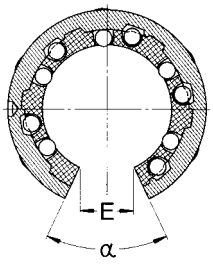

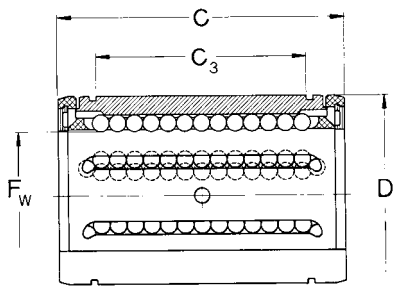

Designations	Dimensions						Basic load ratings dynamic	static
	F_w	D	C	C_3	E	α	C	C_0
	mm					deg.	N	
LBCT 12 A	12	22	32	20	7,6	78	1 160	980
LBCT 16 A	16	26	36	22	10,4	78	1 500	1 290
LBCT 20 A	20	32	45	28	10,8	60	2 240	2 040
LBCT 25 A	25	40	58	40	13,2	60	3 350	3 350
LBCT 30 A	30	47	68	48	14,2	50	5 600	5 700
LBCT 40 A	40	62	80	56	18,7	50	9 000	8 150
LBCT 50 A	50	75	100	72	23,6	50	13 400	12 220
LBCT 60 A	60	90	125	95	29,6	54	20 400	18 000
LBCT 80 A	80	120	165	125	38,4	54	37 500	32 000

Example:
LBCT 20 A
LBCT 80 A-LS
LBCT 50 A-2LS

N.B.:
All LBC.. A and LBH .. A Linear ball bearings available in corrosion resistant!

LBHT ..

Standard series 3
Heavy-load linear ball bearings, open type
LBHT.. A (without seals)
-LS with one seal
-2LS with two seals

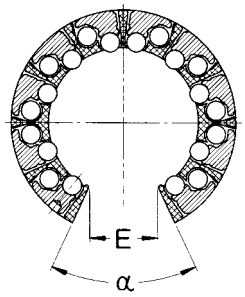

Designations	Dimensions						Basic load ratings dynamic	static
	F_w	D	C	C_3	E	α	C	C_0
	mm					deg.	N	
LBHT 20 A	20	32	45	28	10,8	60	2 650	2 650
LBHT 25 A	25	40	58	40	13,2	60	4 900	5 100
LBHT 30 A	30	47	68	48	14,2	50	7 200	8 000
LBHT 40 A	40	62	80	56	18,7	50	11 600	11 400
LBHT 50 A	50	75	100	72	23,6	50	17 300	17 000

Example:
LBHT 40 A
LBHT 25 A-LS
LBHT 20 A-2LS

LPAT ..

Linear plain bearings, without seals, open design

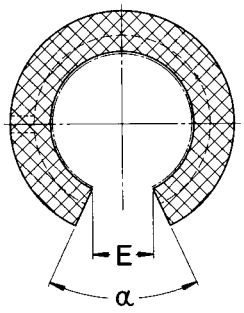

Designations	Dimensions						Basic load ratings dynamic		static
	F_w	D	C	C_3	E	α	C 0,1 m/s	C 4 m/s	C_0
	mm						N		
LPAT 12	12	22	32	20	7,6	78	965	24	3 350
LPAT 16	16	26	36	22	10,4	78	1 530	38	5 400
LPAT 20	20	32	45	28	10,8	60	2 400	60	8 300
LPAT 25	25	40	58	40	13,2	60	4 000	100	14 000
LPAT 30	30	47	68	48	14,2	50	5 500	137	19 300
LPAT 40	40	62	80	56	18,7	50	8 000	200	28 000
LPAT 50	50	75	100	72	23,6	50	12 000	300	41 500
LPAT 60	60	90	125	95	29,6	54	16 600	415	60 000
LPAT 80	80	120	165	125	38,4	54	29 000	720	100 000

N.B.:
All LBC.. A and LBH .. A Linear ball bearings available in corrosion resistant!

LUCF ..

Single units, self-aligning, clearance adjustable, open type, relubricatable
LUCF (without seals)
-2LS with two seals

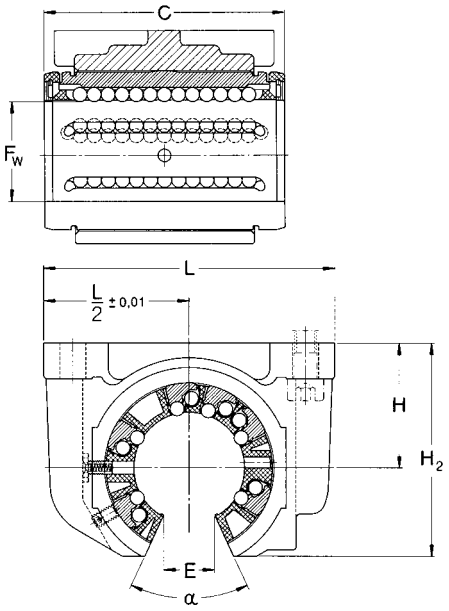

Designations	Dimensions							Basic load ratings dynamic	static
	F_w	C	H ±0,01	H_2	L	E	α	C	C_0
	mm						deg.	N	
LUCF 12	12	32	18	28	52	7,6	78	1 080	815
LUCF 16	16	36	22	35	56	10,4	78	1 320	865
LUCF 20	20	45	25	42	70	10,8	60	2 000	1 370
LUCF 25	25	58	30	51	80	13,2	60	2 900	2 040
LUCF 30	30	68	35	60	88	14,2	50	4 650	3 250
LUCF 40	40	80	45	77	108	18,7	50	7 800	5 200
LUCF 50	50	100	50	88	135	23,6	50	11 200	6 950

Example:
LUCF 16
LUCF 30-2LS

LUCT ..

Single units, clearance adjustable, open type, relubricatable
LUCT (without seals)
-2LS with two seals

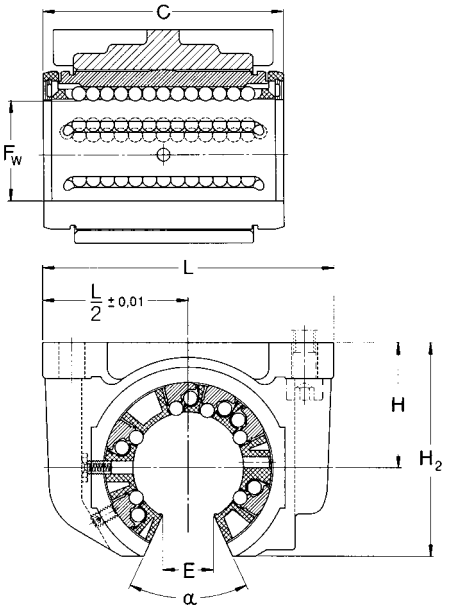

Designations	Dimensions							Basic load ratings dynamic	static
	F_w	C	H ±0,01	H_2	L	E	α	C	C_0
	mm						deg.	N	
LUCT 12	12	32	18	28	52	7,6	78	1 160	980
LUCT 16	16	36	22	35	56	10,4	78	1 500	1 290
LUCT 20	20	45	25	42	70	10,8	60	2 240	2 040
LUCT 25	25	58	30	51	80	13,2	60	3 350	3 350
LUCT 30	30	68	35	60	88	14,2	50	5 600	5 700
LUCT 40	40	80	45	77	108	18,7	50	9 000	8 150
LUCT 50	50	100	50	88	135	23,6	50	13 400	12 220
LUCT 60	60	125	60	105	160	29,6	54	20 400	18 000
LUCT 80	80	165	80	140	205	38,4	54	37 500	32 000

Example:
LUCT 60
LUCT 80-2LS

LUCT ..BH

Single heavy load units, clearance adjustable, open type, relubricatable
LUCT.. BH (without seals)
-2LS with two seals

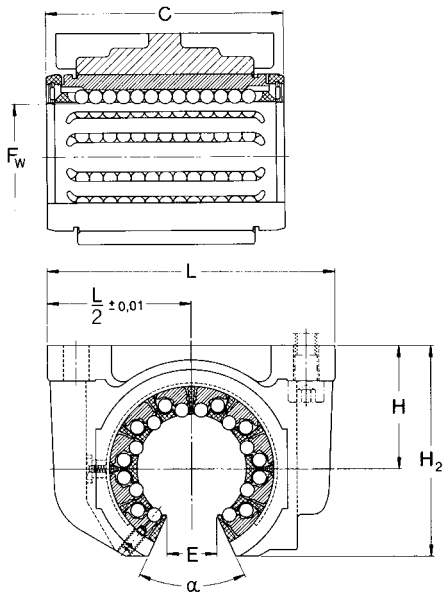

Designations	Dimensions							Basic load ratings dynamic	static
	F_w	C	H ±0,01	H_2	L	E	α	C	C_0
	mm						deg.	N	
LUCT 20 BH	20	45	25	42	70	10,8	60	2 650	2 650
LUCT 25 BH	25	58	30	51	80	13,2	60	4 900	5 100
LUCT 30 BH	30	68	35	60	88	14,2	50	7 200	8 000
LUCT 40 BH	40	80	45	77	108	18,7	50	11 600	11 400
LUCT 50 BH	50	100	50	88	135	23,6	50	17 300	17 000

Example:
LUCT BH 30
LUCT BH 20-2LS

LUCT ..PA

Single units without seals, open type

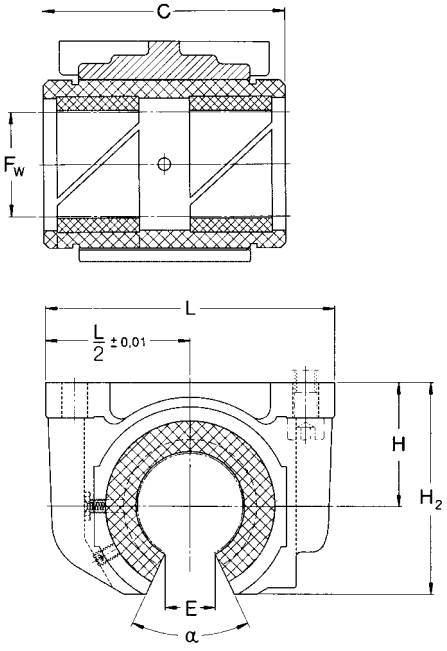

Designations	Dimensions							Basic load ratings dynamic		static
	F_w	C	H	H_2	L	E	α	C 0,1 m/s	C 4 m/s	C_0
	mm						deg.	N		
LUCT 12 PA	12	32	18	28	52	7,6	78	965	24	3 350
LUCT 16 PA	16	36	22	35	56	10,4	78	1 530	38	5 400
LUCT 20 PA	20	45	25	42	70	10,8	60	2 400	60	8 300
LUCT 25 PA	25	58	30	51	80	13,2	60	4 000	100	14 000
LUCT 30 PA	30	68	35	60	88	14,2	50	5 500	137	19 300
LUCT 40 PA	40	80	45	77	108	18,7	50	8 000	200	28 000
LUCT 50 PA	50	100	50	88	135	23,6	50	12 000	300	41 500
LUCT 60 PA	60	125	60	105	160	29,6	54	16 600	415	60 000
LUCT 80 PA	80	165	80	140	205	38,4	54	29 000	720	100 000

LUNF ..

Single units, self-aligning, clearance adjustable, open type, relubricatable
LUNF (without seals)
-2LS with two seals

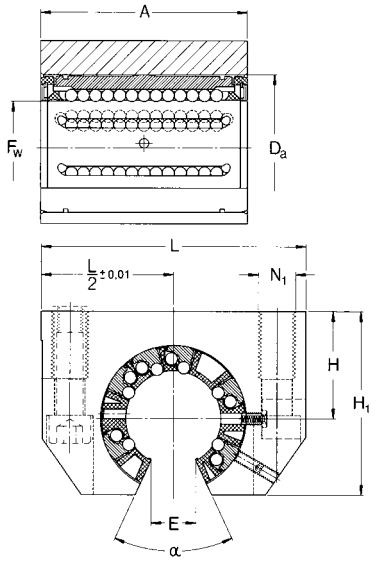

Designations	Dimensions							Basic load ratings dynamic	static
	F_w	A	H ±0,01	H_1	L	E	α	C	C_0
	mm						deg.	N	
LUNF 12	12	32	18	28	43	7,6	78	1 080	815
LUNF 16	16	37	22	35	53	10,4	78	1 320	865
LUNF 20	20	45	25	42	60	10,8	60	2 000	1 370
LUNF 25	25	58	30	51	78	13,2	60	2 900	2 040
LUNF 30	30	68	35	60	87	14,2	50	4 650	3 250
LUNF 40	40	80	45	77	108	18,7	50	7 800	5 200
LUNF 50	50	100	50	88	132	23,6	50	11 200	6 950

Example:
LUNF 20
LUNF 16-2LS

LTCF ..

Tandem units, self-aligning, open type, relubricatable
LTCF (without seals)
-2LS with two seals

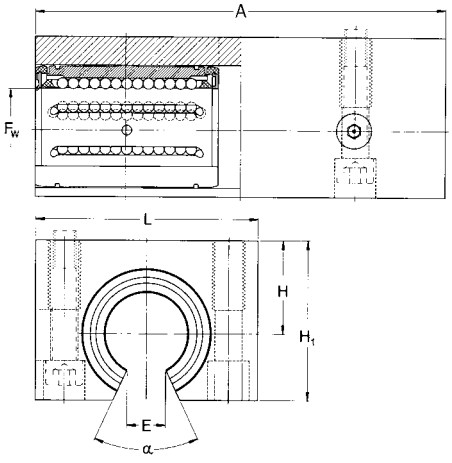

Designations	Dimensions							Basic load ratings dynamic	static
	F_w	A	H ±0,01	H_1	L	E	α	C	C_0
	mm						deg.	N	
LTCF 12	12	76	18	29	42	7,6	78	1 760	1 630
LTCF 16	16	84	22	35	50	10,4	78	2 160	1 730
LTCF 20	20	104	25	42	60	10,8	60	3 200	2 750
LTCF 25	25	130	30	51	74	13,2	60	4 750	4 150
LTCF 30	30	152	35	60	84	14,2	50	7 500	6 550
LTCF 40	40	176	45	77	108	18,7	50	12 700	10 400
LTCF 50	50	224	50	88	130	23,6	50	18 300	14 000

Example:
LTCF 50
LTCF 12-2LS

LTCT ..

Tandem units, open type, relubricatable
LTCT (without seals)
-2LS with two seals

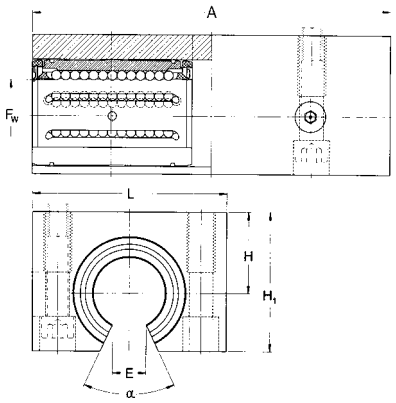

Designations	Dimensions							Basic load ratings dynamic	static
	F_w	A	H	H_1	L	E	α	C	C_0
	mm						deg.	N	
LTCT 12	12	76	18	29	42	7,6	78	1 900	1 960
LTCT 16	16	84	22	35	50	10,4	78	2 450	2 600
LTCT 20	20	104	25	42	60	10,8	60	3 650	4 150
LTCT 25	25	130	30	51	74	13,2	60	5 500	6 700
LTCT 30	30	152	35	60	84	14,2	50	9 150	11 400
LTCT 40	40	176	45	77	108	18,7	50	15 000	16 300
LTCT 50	50	224	50	88	130	23,6	50	22 000	24 500

Example:
LTCT 16
LTCT 30-2LS

LQCF ..

Quadro units, self-aligning, open type, relubricatable
LQCF (without seals)
-2LS with four seals

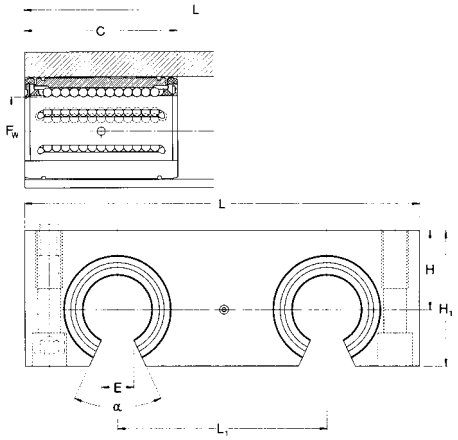

Designations	Dimensions								Basic load ratings dynamic	static
	F_w	C	H ±0,01	H_1	L	L_1	E	α	C	C_0
	mm							deg.	N	
LQCF 12	12	32	18	30	85	42	7,6	78	2 850	3 250
LQCF 16	16	36	22	35	100	54	10,4	78	3 450	3 450
LQCF 20	20	45	25	42	130	72	10,8	60	5 200	5 500
LQCF 25	25	58	30	51	160	88	13,2	60	7 650	8 150
LQCF 30	30	68	35	60	180	96	14,2	50	12 200	12 900
LQCF 40	40	80	45	77	230	122	18,7	50	20 800	20 800

Example:
LQCF 12
LQCF 40-2LS

LQCT ..

Quadro units, open type, relubricatable
LQCT (without seals)
-2LS with four seals

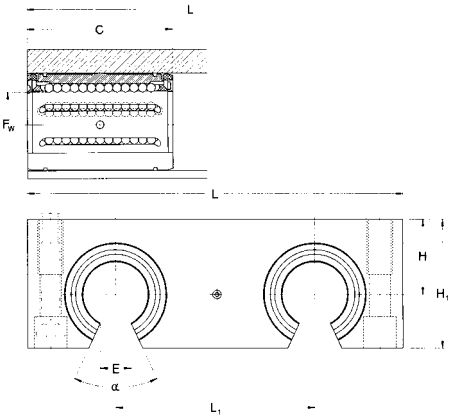

Designations	Dimensions								Basic load ratings dynamic	static
	F_w	C	H ±0,01	H_1	L	L_1	E	α	C	C_0
	mm							deg.	N	
LQCT 12	12	32	18	30	85	42	7,6	78	3 100	4 000
LQCT 16	16	36	22	35	100	54	10,4	78	4 000	5 200
LQCT 20	20	45	25	42	130	72	10,8	60	6 000	8 300
LQCT 25	25	58	30	51	160	88	13,2	60	9 000	13 400
LQCT 30	30	68	35	60	180	96	14,2	50	15 000	22 800
LQCT 40	40	80	45	77	230	122	18,7	50	24 000	33 500
LQCT 50	50	100	55	93	280	152	23,6	50	35 500	49 000

Example:
LQCT 42
LQCT 16-2LS

LRCB/LRCC

Shaft supports
LRCB with bore holes
LRCC without bore holes

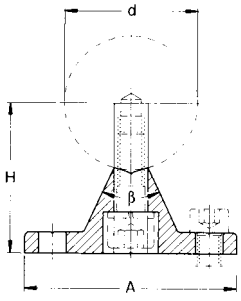

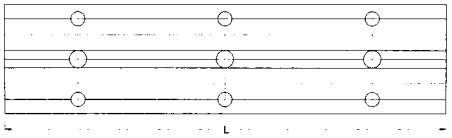

Designations		Dimensions d	A	H ±0,02	L
		mm			
LRCB 12	**LRCC 12**	12	40	22	600
LRCB 16	**LRCC 16**	16	45	26	600
LRCB 20	**LRCC 20**	20	52	32	600
LRCB 25	**LRCC 25**	25	57	36	600
LRCB 30	**LRCC 30**	30	69	42	600
LRCB 40	**LRCC 40**	40	73	50	600
LRCB 50	**LRCC 50**	50	84	60	600
LRCB 60	**LRCC 60**	60	94	68	600
LRCB 80	**LRCC 80**	80	116	86	600

Example:
LRCB 80
LRCC 80

Precision shafts

SKF precision shafts (**fig. 8**) can be supplied either as solid or hollow shafts.
The solid shafts are available in all dimensions required to fit SKF linear ball bearings; the hollow shafts have a minimum outside diameter of 16 mm.

They are induction hardened and ground (**see table on next page**). SKF shafts have exceptionally high dimensional stability and long service life.

Yet at the end of shafts of normal production length, deviations of hardness and dimensional stability can occur.

For special applications, solid shafts of stainless steel or hard chromium plated shafts having a chromium layer approximately 10 µm thick can be supplied. When using stainless steel shafts, please note that the surface is not as hard as that of shafts made of high-grade steel. The case depth may also be greater than indicated in **table 5** and this may have an influence on the machinability of the shafts.

Because of the benefits they offer, SKF precision shafts are not only used in combination with SKF linear ball bearings for linear guides, but also for other purposes, for instance axles or column sleeves.

Tolerances

SKF precision steel shafts are available as standard with a diameter machined to tolerance h6 or h7. Other tolerances are available on request. Shafts cut to special lengths have a length tolerance to DIN 7168 "medium". The relevant values are given in **table 4**.

Shafts with radial holes

For linear guides requiring support, shafts with threaded radial holes are needed. These can be supplied by SKF. The radial holes can be positioned either in a way that they accommodate SKF shaft supports or as specified in the customer drawing.

Fig. 8



Table 4

Nominal length		Deviation
over	incl.	
mm		
–	120	±0,3
120	400	±0,5
400	1 000	±0,8
1 000	2 000	±1,2
2 000	4 000	±2
4 000	8 000	±3

Length tolerances for shafts to DIN/ISO 2768 medium class

Table 5

Shaft diameter		Hardness depth
over	incl.	min.
mm		
-	10	0,5
10	18	0,8
18	30	1,2
30	50	1,5
50	80	2,2
80	100	3

Case hardening of SKF shafts

N.B.:
In addition to this catalogue, all product brochures are available on **www.skf.com** *as PDF files.*

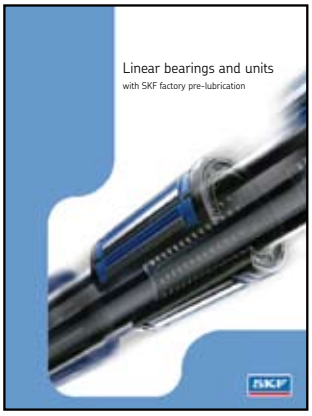

Publication nr. 4182 EN

Composite shafts

Composite shafts can be supplied to customer drawings, either with screwed joints or with "plug and socket" joints, depending on the application.

Accurately centred trunnions and sockets guarantee smooth transitions at the butt joint. To ensure correct assembly, the relative positions of the shaft sections and of the shaft ends are marked. Composite shafts should be fastened to a support at the butt joints, particularly when these are of the "plug and socket" type. The radial holes should be positioned as closely to the joint as possible and the shaft length selected in a way that bending of the shaft will not result in a gap forming at the joint.

Materials

SKF precision steel shafts are available as shown in **tables 6** and **7**.

SKF precision shafts are made from the non-alloyed high-grade steels Cf53 (Material No.1.1213), Ck53 (Material No.1.1210), Ck60 (Material No.1.1221) and 100Cr6 (Material No.12067).

The surface hardness is between approximately 60 and 64 HRC. The solid shafts of stainless steel are made from the steel X90CrMoV18 (Material No.1.4112) or X46Cr13 (Material No.1.4034). In this case the surface hardness lies between approximately 52 and 56 HRC.

Shafts made from other materials can be supplied to special order.

Table 6

Designation	Type
LJM	Precision shaft, steel Ck53/Cf53, 60-64HRC, h6
LJMH	Hard chromium plated precision shaft, steel Ck53/Cf53, min. 60HRC, h7
LJMR	Precision shaft, corrosion resistant, X90CrMoV18, 52-56HRC, h6/h7
LJMS	Precision shaft, corrosion resistant, X46Cr13, 52-56HRC, h6/h7
LJT	Hollow shaft, high-grade steel, Ck60 or 100Cr6, 60-66HRC, h6/h7

Table 7

Standard length of the shafts[1] Shaft diameter	Dimensions Maximal length[2]				
	LJM[3]	LJMH[3]	LJMS[3]	LJMR[3]	LJT[3]
mm					
3[4]				200	
4[4]				200	
5	3 900	2 000	1 000	3 800	
6	3 900	3 900	3 900	3 800	
8	3 900	3 900	3 900	3 800	
10	6 200	6 200	3 900	3 800	
12	6 200	6 200	4 900	6 200	6 200
14	6 200	6 200	4 900	6 200	6 200
16	6 200	6 200	4 900	6 200	6 200
20	6 200	6 200	4 900	6 200	6 200
25	6 200	6 200	4 900	6 200	6 200
30	6 200	6 200	4 900	6 200	6 200
40	6 200	6 200	4 900	6 200	6 200
50	6 200	6 200	4 900	6 200	6 200
60	6 200	6 200	4 900	6 200	6 200
80	6 200	6 200		6 200	6 200

[1] Different diameters and length on request
[2] Length tolerance ±10 % (based on maximum shaft length)
[3] For details see page 51/52
[4] Only available as ESSC 2

Standard shaft lengths

Ordering key

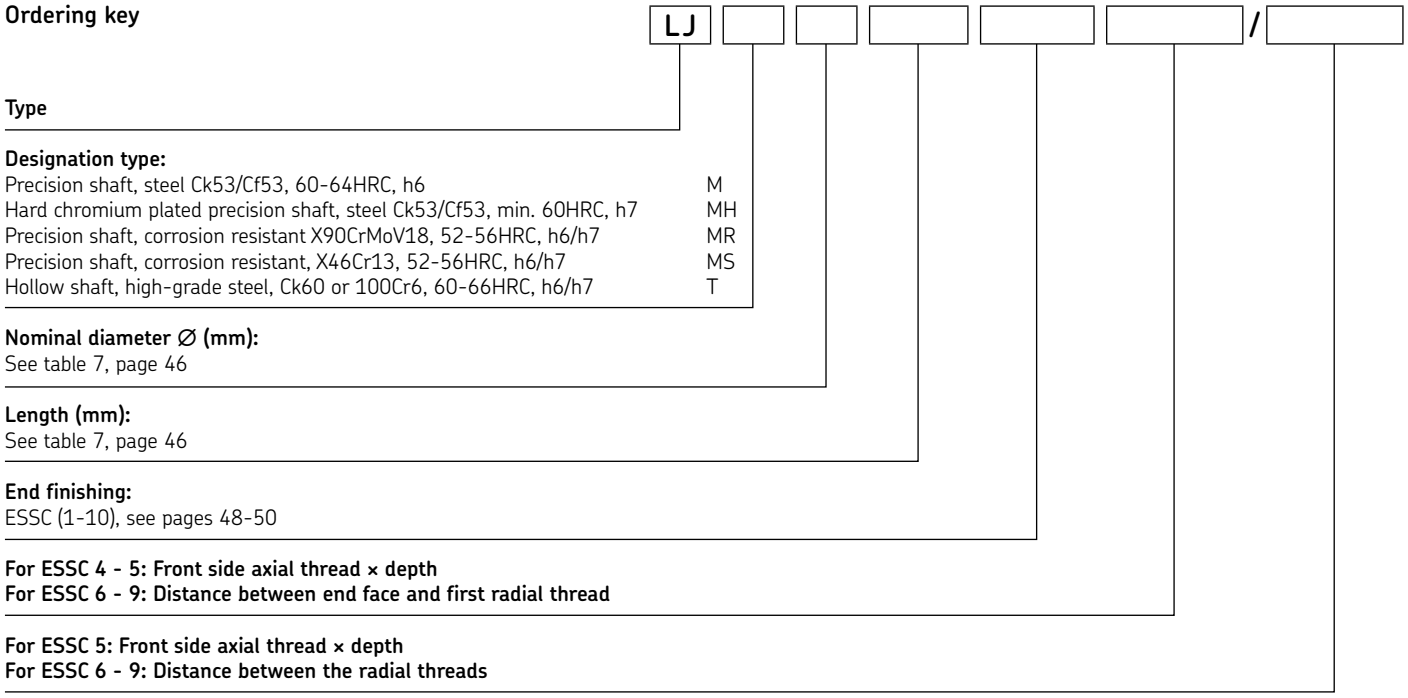

Example 1:	LJ	MR	40	1200	ESSC1			
Example 2:	LJ	MR	40	1200	ESSC2			
Example 3:	LJ	MR	40	1200	ESSC3			
Example 4:	LJ	MR	40	1200	ESSC4	M14×40		
Example 5:	LJ	MR	40	1200	ESSC5	M14×40	/	M16×50
Example 6:	LJ	MR	40	1200	ESSC6			
Example 7:	LJ	MR	40	1200	ESSC7	125	/	250
Example 8:	LJ	MR	40	1200	ESSC8			
Example 9:	LJ	MR	40	1200	ESSC9	125	/	250
Example 10:	LJ	MR	40	1200	ESSC10			

ESSC 1

Cut, without chamfer, only deburred
Length tolerance according to ISO 2768 medium class

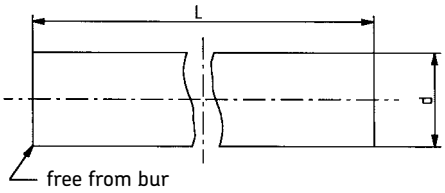

ESSC 2

Cut, with chamfer
Length tolerance as ESSC 1

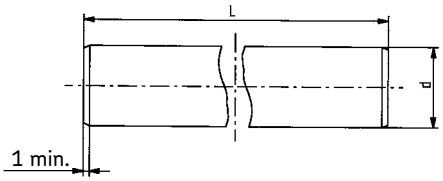

ESSC 3

Cut, 25° machined chamfer, end faces cut at right angles for limited length tolerance or chamfered according to customer specification
Length tolerance +/– 0,1 mm to a total length of 3 000 mm

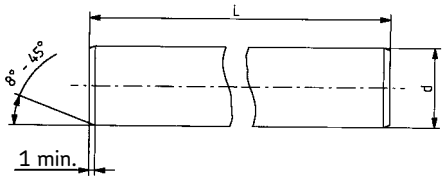

ESSC 4

Cut, 25° machined chamfer, end faces cut at right angles, one front-side (axial) hole
Length tolerance as ESSC 3
(**table 8**)

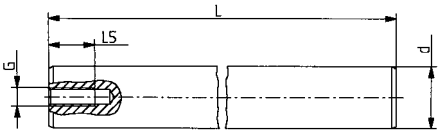

Table 8

Diameter ∅	**Thread** G	**Depth** L_5
mm		mm
5		
8	M4	10
10	M4	10
12	M5	12,5
14	M5	12,5
16	M6	15
20	M8	20
25	M10	25
30	M10	25
40	M12	30
50	M16	40
60	M20	50
80	M24	60

ESSC 5

As ESSC 4 with two front side (axial) holes (**table 9**)

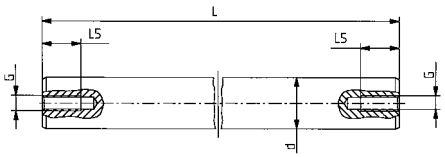

Table 9

Diameter ∅	Thread G	Depth L_5
mm		mm
5		
8	M4	10
10	M4	10
12	M5	12,5
14	M5	12,5
16	M6	15
20	M8	20
25	M10	25
30	M10	25
40	M12	30
50	M16	40
60	M20	50
80	M24	60

ESSC 6

Cut and chamfered as ESSC 2
- with radial holes for LRCB
- first radial hole at Jx = J/2
- H1 according to hardening depth

(**table 10**)

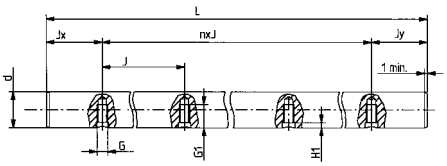

Table 10

∅	Thread	G	G_1	J	J_x
mm		mm			
5	–	–	–	–	–
8	–	–	–	–	–
12	M4	5	8	75	37,5
16	M5	6	9,5	100	50
20	M6	7	13	100	50
25	M8	9	14	120	60
30	M10	11	18	150	75
40	M10	11	20	200	100
50	M12	13	23	200	100
60	M14	15	28	300	150
80	M16	16	33	300	150

ESSC 7

As ESSC6
- radial holes with J and Jx according to customer specification

(**table 11**)

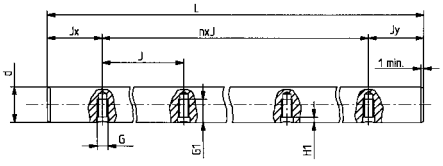

Table 11

∅	Thread	G	G_1	J	J_x
mm		mm			
5	–	–	–	–	–
8	–	–	–	–	–
12	M4	5	8	–	–
16	M5	6	9,5	–	–
20	M6	7	13	–	–
25	M8	9	14	–	–
30	M10	11	18	–	–
40	M10	11	20	–	–
50	M12	13	23	–	–
60	M14	15	28	–	–
80	M16	16	33	–	–

ESSC 8

Cut and chamfer as ESSC 2
- shaft mounted on LRCB
- first radial hole with Jx = J/2
- H1 according to hardness depth

(**table 12**)

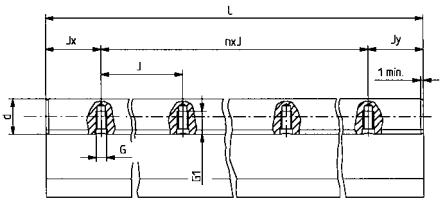

Table 12

Ø	Thread	G	G_1	J	J_x
mm		mm			
5	–	–	–	–	–
8	–	–	–	–	–
12	M4	5	8	75	37,5
16	M5	6	9,5	100	50
20	M6	7	13	100	50
25	M8	9	14	120	60
30	M10	11	18	150	75
40	M10	11	20	200	100
50	M12	13	23	200	100
60	M14	15	28	300	150
80	M16	16	33	300	150

ESSC 9

As ESSC8
- shaft mounted on LRCC
- radial holes with J and Jx according to customer specification

(**table 13**)

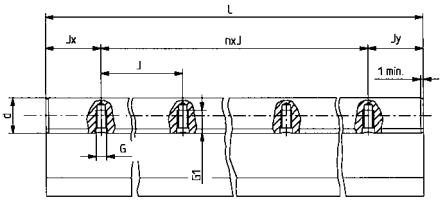

Table 13

Ø	Thread	G	G_1	J	J_x
mm		mm			
5	–	–	–	–	–
8	–	–	–	–	–
12	M4	5	8	–	–
16	M5	6	9,5	–	–
20	M6	7	13	–	–
25	M8	9	14	–	–
30	M10	11	18	–	–
40	M10	11	20	–	–
50	M12	13	23	–	–
60	M14	15	28	–	–
80	M16	16	33	–	–

ESSC 10

Shaft according to customer specification
- manufacture only according to customer drawing

Standard designs for fixed length without chamfer

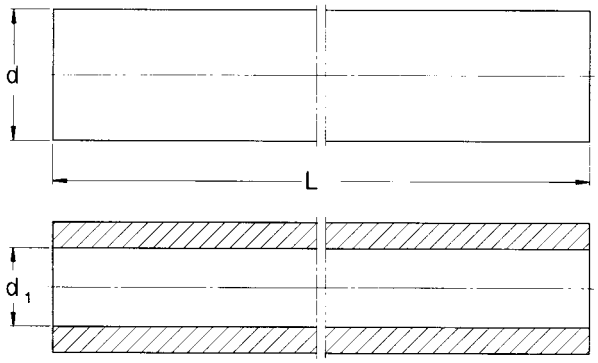

Standard designs for fixed length with chamfer

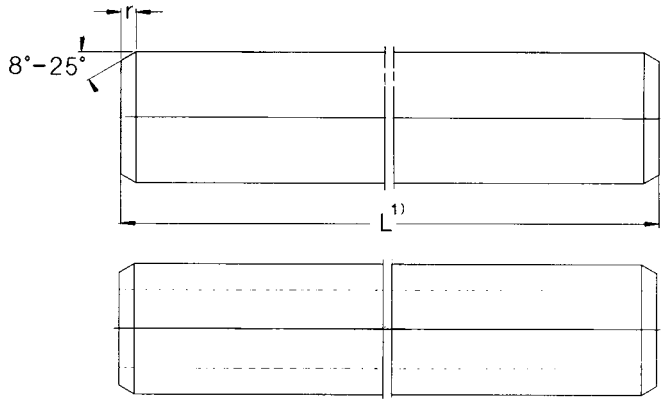

[1] **Shafts cut to special length with chamfered ends.** The length tolerance of these shafts corresponds to LJM 20×1 500 ESSC2 medium class.
The designation for a shaft with 20 mm diameter cut to a length of 1,5 m is, for example, LJM 20×1 500 ESSC2.

Basic data for the various models for the precision shafts

Dimensions			Mass		Moment of inertia		Cross sectional area		Designations				
			Solid shaft	Hollow shaft	Solid shaft	Hollow shaft	Solid shaft	Hollow shaft	Solid shaft of precision steel	Solid shaft of stainless steel		Solid shafts with high grade steel hard chromium plated	Hollow shaft high grade steel
d	d_1	r_{min}							Cf53/Ck53	X90CrMoV18	X46Cr13	Cf53/Ck53	Ck60/100Cr6
mm			kg/m		cm^4		mm^2						
3	–	0,4	0,06	–	0,0004	–	7,1	–	–	LJMR 3	–	–	–
4	–	0,4	0,1	–	0,0013	–	12,6	–	–	LJMR 4	–	–	–
5	–	0,8	0,15	–	0,0031	–	19,6	–	LJM 5	LJMR 5	LJMS 5	LJMH 5	–
6	–	0,8	0,22	–	0,0064	–	28,3	–	LJM 6	LJMR 6	LJMS 6	LJMH 6	–
8	–	0,8	0,39	–	0,02	–	50,3	–	LJM 8	LJMR 8	LJMS 8	LJMH 8	–
10	–	0,8	0,62	–	0,049	–	78,5	–	LJM 10	LJMR 10	LJMS 10	LJMH 10	–
12	4	1	0,89	0,79	0,102	–	113	–	LJM 12	LJMR 12	LJMS 12	LJMH 12	LJT 12
14	–	1	1,21	–	0,189	–	154	–	LJM 14	LJMR 14	LJMS 14	LJMH 14	–
16	7	1	1,58	1,28	0,322	0,31	201	163	LJM 16	LJMR 16	LJMS 16	LJMH 16	LJT 16
20	14	1,5	2,47	1,25	0,785	0,597	314	160	LJM 20	LJMR 20	LJMS 20	LJMH 20	LJT 20
25	16	1,5	3,86	2,35	1,92	1,64	491	305	LJM 25	LJMR 25	LJMS 25	LJMH 25	LJT 25
30	18	1,5	5,55	3,5	3,98	3,46	707	453	LJM 30	LJMR 30	LJMS 30	LJMH 30	LJT 30
40	28	2	9,86	4,99	12,6	9,96	1 260	685	LJM 40	LJMR 40	LJMS 40	LJMH 40	LJT 40
50	30	2	15,4	9,91	30,7	27,7	1 960	1 350	LJM 50	LJMR 50	LJMS 50	LJMH 50	LJT 50
60	36	2,5	22,2	14,2	63,6	57,1	2 830	1 920	LJM 60	LJMR 60	LJMS 60	LJMH 60	LJT 60
80	57	2,5	39,5	19,43	201	153	5 030	2 565	LJM 80	–	–	LJMH 80	LJT 80

Attention:
d_1 can deviate from the value quoted.
Different shaft diameters and types on request.
The static load capacity has to be decreased by 8 % and the dynamic load capacity by 18 % when using the non-rusting types (HV6) in conjunction with precision steel shafts made of stainless steel.

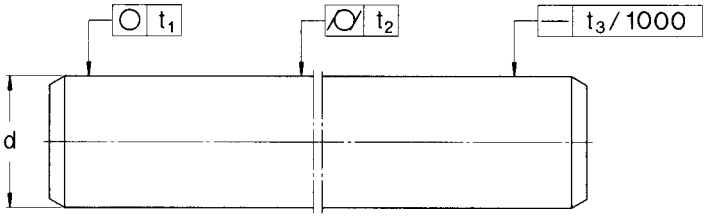

Basic data for the various models for the precision shafts of high-grade steel

Shaft	**Accuracy of dimension and form**									
	Shafts to tolerance h6					**Shafts to tolerance h7**				
Nominal diameter	Diameter deviation		Roundness	Circularity	Straightness[1)]	Diameter deviation		Roundness	Circularity	Straightness[1)]
d	high	low	t_1	t_2	t_3	high	low	t_1	t_2	t_3
mm	µm									
3	0	–6	3	4	150	0	–10	4	6	150
4	0	–8	4	5	150	0	–12	5	8	150
5	0	–8	4	5	150	0	–12	5	8	150
6	0	–8	4	5	150	0	–12	5	8	150
8	0	–9	4	6	120	0	–15	6	9	120
10	0	–9	5	7	120	0	–15	7	10	120
12	0	–11	5	8	100	0	–18	8	11	100
14	0	–11	5	8	100	0	–18	8	11	100
16	0	–11	5	8	100	0	–18	8	11	100
20	0	–13	6	9	100	0	–21	9	13	100
25	0	–13	6	9	100	0	–21	9	13	100
30	0	–13	6	9	100	0	–21	9	13	100
40	0	–16	7	11	100	0	–25	11	16	100
50	0	–16	7	11	100	0	–25	11	16	100
60	0	–19	8	13	100	0	–30	13	19	100
80	0	–19	8	13	100	0	–30	13	19	100

[1)] Shafts with straightness 50 mm/1000 mm to order.

Linear ball bearing table without drive

Fig. 9



LZBU quadro-linear tables (**fig. 9**)
The closed LZBU quadro linear table consists of a closed quadro linear bearing unit, two tandem shaft blocks and two shafts of the required length.

The bearing unit is fitted with four LBCD-LS self-aligning linear ball bearings, each sealed at one end. The LZBU-"A" design enables axial movement of the linear bearing unit, i.e. the shafts are fixed to the machine bed via LEAS-"A" shaft blocks. The LZBU-"B" design is provided with LEAS-"B" shaft blocks. This combination enables the shafts to travel with the shaft blocks in applications where the linear bearing unit is fixed. LZBU quadro linear tables can be supplied in sizes ranging from 8 to 50 mm. Size 8 tables are not self-aligning and are not designed for relubrication.

The description of the closed quadro-linear table also applies to the combination of series 1 LQBR..2LS quadro linear bearing units with twin LEBS tandem shaft blocks and shafts (on special request only). Shaft diameters range from 12 to 50 mm.

LZAU quadro-linear tables
The open LZAU quadro linear table comprises the open quadro-linear unit and two high precision shafts with shaft supports. The bearing unit is fitted with four LBCF-"A-LS" self-aligning linear ball bearings, each sealed on one end. The length of these tables is dictated by the distance between centres of the attachment holes in the LRCB shaft supports. The total length should always be a multiple of this distance. LZAU are available in sizes ranging from 12 to 50 mm.

N.B.:
In addition to this catalogue, all product brochures are available on **www.skf.com** *as PDF files.*

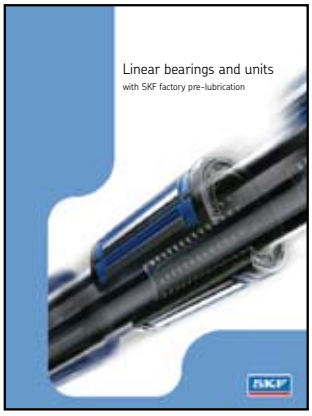

Publication nr. 4182 EN

2 Guiding systems

Linear ball bearing table without drive

Ordering key

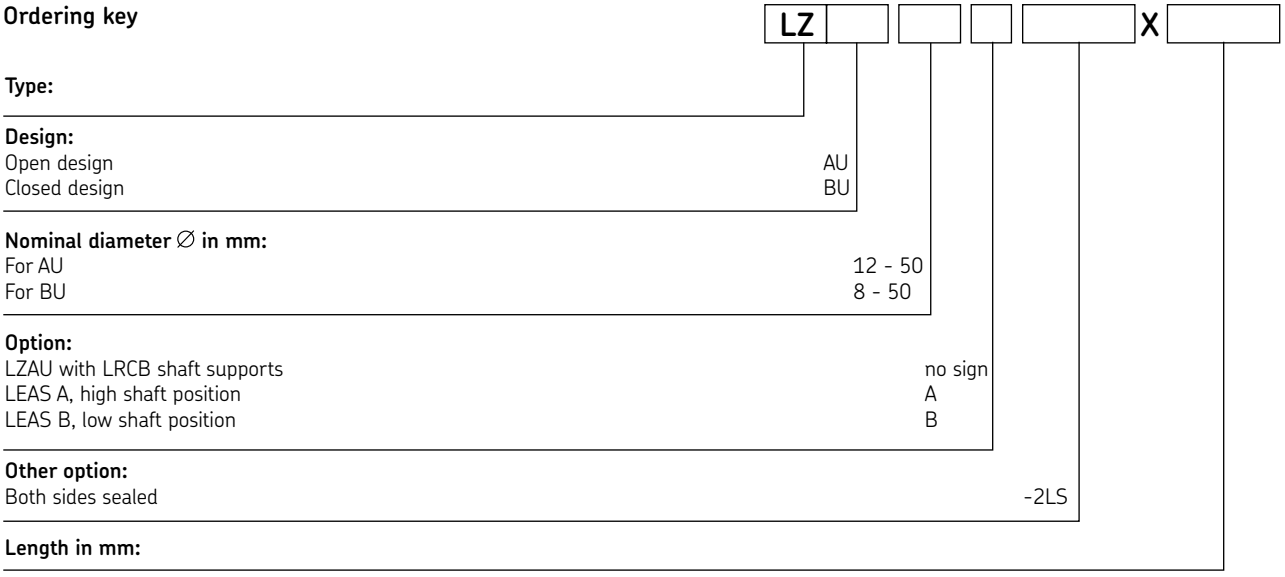

Example: L Z | BU | 40 | B | -2LS | X | 1500

LZBU .. A-2LS

Quadro linear tables, LZBU version with LQCD closed bearing units, LEAS-A* shaft blocks and shafts

* "A" design means fixed shafts and moving unit

Design LZBU ... A with closed linear bearing unit

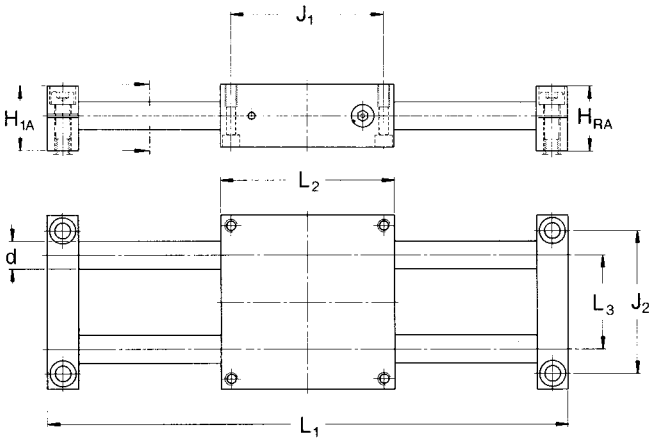

Designations[1]	Dimensions								Load ratings[3] dynamic	static
	d	H_{RA} ±0,03	H_{1A}	L_1[2]	L_2	L_3	J_1	J_2	C	C_0
	mm								N	
LZBU 8 A-2LS[4]	8	24	23	600	65	32	55	52	1 290	1 420
LZBU 12 A-2LS	12	34	32	900	85	42	73	70	2 850	3 250
LZBU 16 A-2LS	16	38	37	1 500	100	54	88	82	3 450	3 450
LZBU 20 A-2LS	20	48	46	1 800	130	72	115	108	5 200	5 500
LZBU 25 A-2LS	25	58	56	1 800	160	88	140	132	7 650	8 150
LZBU 30 A-2LS	30	67	64	2 400	180	96	158	150	12 200	12 900
LZBU 40 A-2LS	40	84	80	3 000	230	122	202	190	20 800	20 800
LZBU 50 A-2LS	50	100	96	3 000	280	152	250	240	30 000	28 000

[1] The designation for an LZBU quadro-linear table with a shaft length of, for instance, 1 200 mm LZBU ...-2LS×1 200. Delivered as a kit of parts.
[2] Recommended maximal shaft length. On demand longer shaft lengths are available. The appropiate length tolerances of these shafts are according to DIN 7168 coarse series.
[3] Valid only for even loading of all four LBC... A linear ball bearings. On delivery the deviation of the shaft must be considered and possibly the load rating revised.
[4] Units fitted with LBCR linear ball bearings are not designed for relubrication and are not self-aligning.

LZBU .. B-2LS

Quadro linear tables, LZBU version with LQCD closed bearing units, LEAS-B* shaft blocks and shafts

* "B" design means fixed unit and moving shafts

Design LZBU ... B with closed linear bearing unit

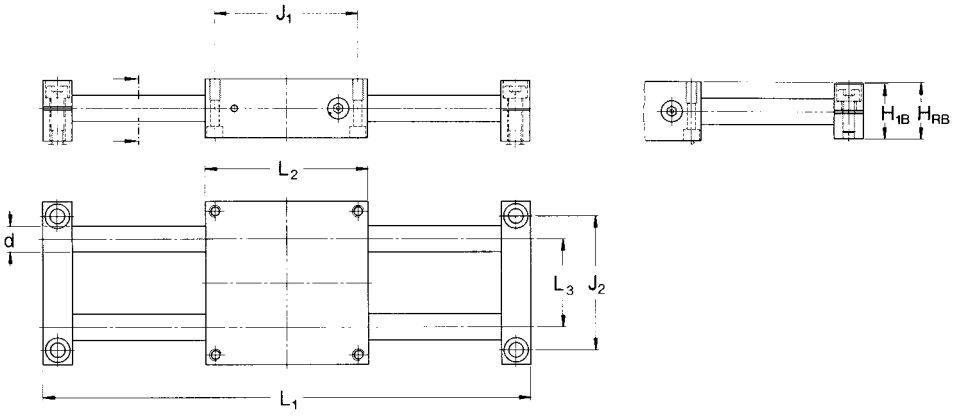

Designations[1]	Dimensions								Load ratings[3] dynamic	static
	d	H_{RB} ± 0,03	H_{1B}	L_1[2]	L_2	L_3	J_1	J_2	C	C_0
	mm								N	
LZBU 8 B-2LS[4]	8	22,5	22	600	65	32	55	52	1 290	1 420
LZBU 12 B-2LS	12	30	28	900	85	42	73	70	2 850	3 250
LZBU 16 B-2LS	16	35	34	1 500	100	54	88	82	3 450	3 450
LZBU 20 B-2LS	20	44	42	1 800	130	72	115	108	5 200	5 200
LZBU 25 B-2LS	25	54	52	1 800	160	88	140	132	7 650	8 150
LZBU 30 B-2LS	30	61	58	2 400	180	96	158	150	12 200	12 900
LZBU 40 B-2LS	40	76	72	3 000	230	122	202	190	20 800	20 800
LZBU 50 B-2LS	50	92	88	3 000	280	152	250	240	30 000	28 000

[1] The designation for an LZBU quadro-linear table with a shaft length of, for instance, 1 200 mm LZBU ...-2LS×1 200. Delivered as a kit of parts.
[2] Recommended maximal shaft length. On demand longer shaft lengths are available. The appropiate length tolerances of these shafts are according to DIN 7168 coarse series.
[3] Valid only for even loading of all four LBC... A linear ball bearings. On delivery the deviation of the shaft must be considered and possibly the load rating revised.
[4] Units fitted with LBCR linear ball bearings are not designed for relubrication and are not self-aligning.

LZAU .. -2LS

Quadro linear tables, LZAU version with LQCF open bearing units and supported shafts

Design LZAU with open linear bearing unit type LQCF

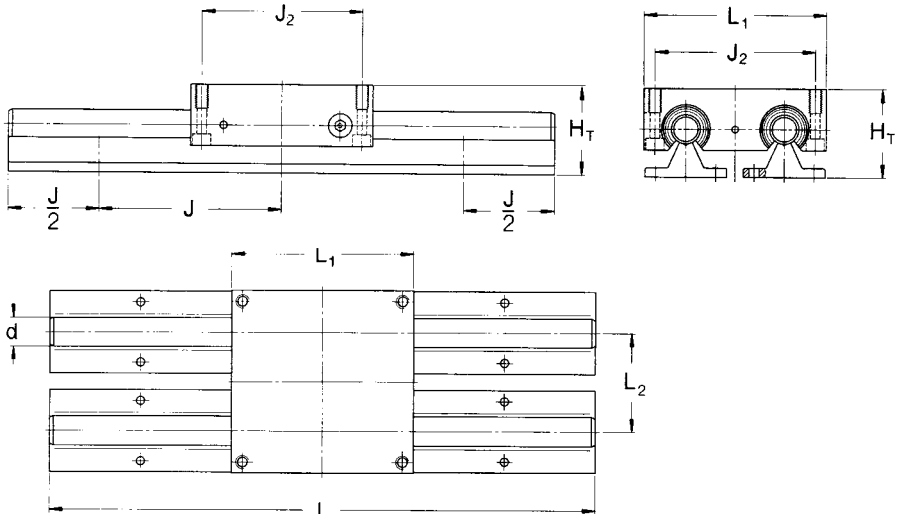

Designations[1]	Dimensions							Load ratings[3] dynamic	static
	d	H_T ± 0,03	J[2]	L	L_1	L_2	J_2	C	C_0
	mm							N	
LZAU 12-2LS	12	40	75	900	85	42	73	2 850	3 250
LZAU 16-2LS	16	48	100	1 500	100	54	88	3 450	3 450
LZAU 20-2LS	20	57	100	1 800	130	72	115	5 200	5 500
LZAU 25-2LS	25	66	120	1 800	160	88	140	7 650	8 150
LZAU 30-2LS	30	77	150	2 400	180	96	158	12 200	1 2900
LZAU 40-2LS	40	95	200	3 000	230	122	202	20 800	20 800
LZAU 50-2LS	50	115	200	3 000	280	152	250	30 000	28 000

[1] The designation for an LZAU quadro-linear table with a shaft length of, for instance, 600 mm LZAU ... –2LS × 600. Delivered with shafts and shaft supports ready assembled.
[2] The separation is always arranged symmetrically to half the table length.
[3] Valid only for even loading of all four LBC... A linear ball bearings.

Dimensions Standard length										
d	L									
mm	Length increments in mm									
12 ÷ 40	300	600	900	1 200	1 500	1 800	2 100	2 400	2 700	3 000
50	–	600	900	1 200	1 500	1 800	2 100	2 400	2 700	3 000

Applications

In response to industry's ultimate need to produce more with less, SKF has combined its knowledge and experience with the latest technology to develop solutions for your specific conditions. Whether your goal is to design equipment that provides more customer value, or to increase overall profitability, with SKF experience and expertise, you're likely to find a real solution.

Portable tool

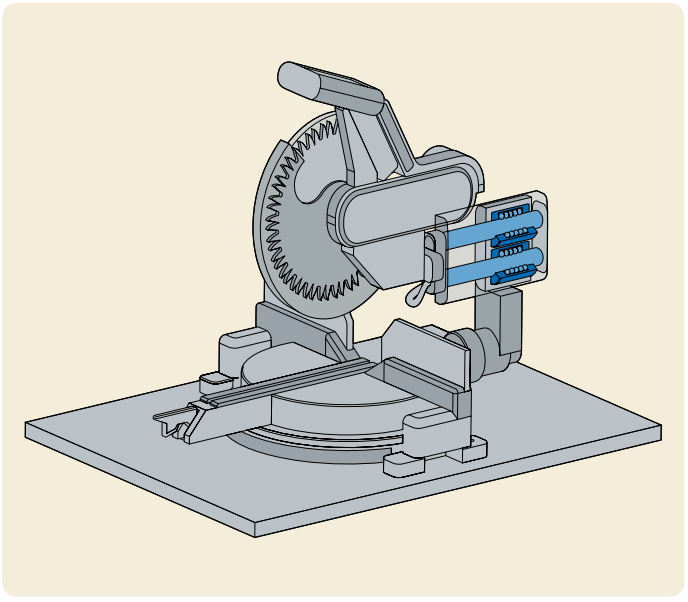

Components application
a) Linear ball bearings
b) Precision shafts

Pneumatic handling

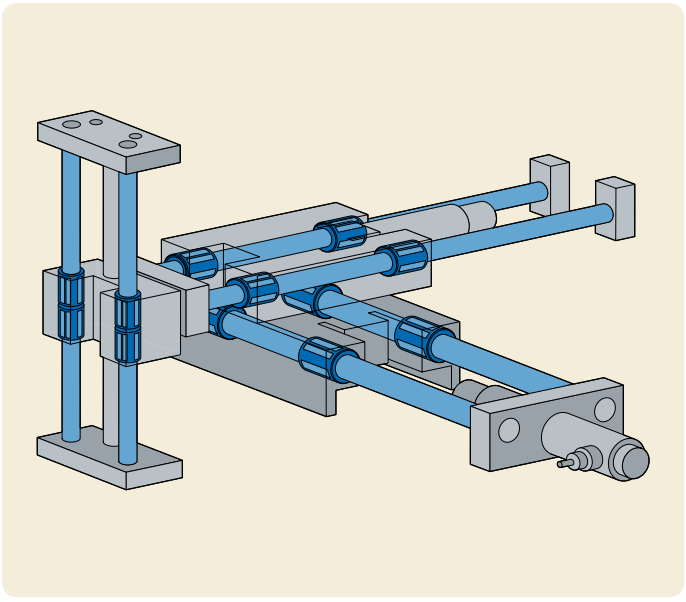

Components application
a) Linear ball bearings
b) Precision shafts

Bread slicing machine

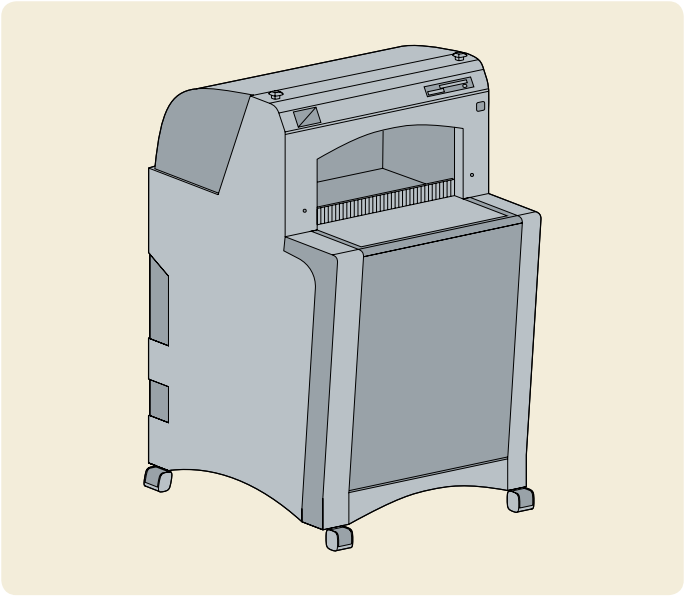

Components application
a) Linear ball bearings

Press brake

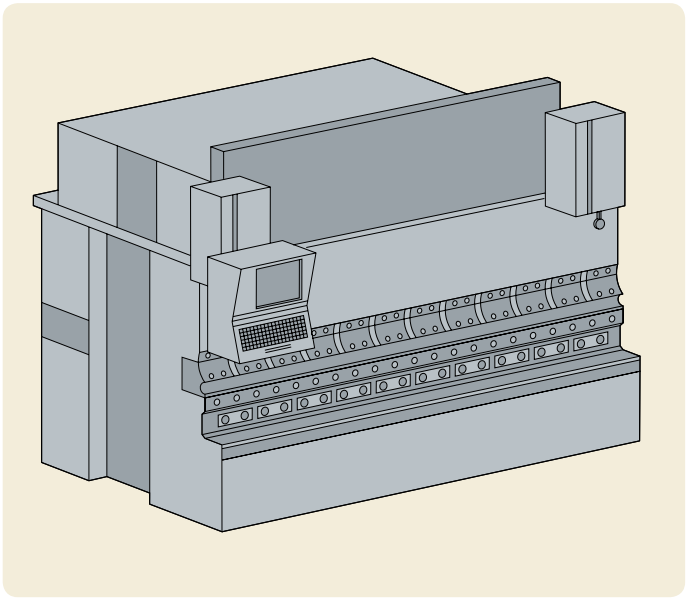

Components application
a) Linear ball bearings
b) Precision shafts
c) Precision ball screws

Profile rail guides

Profile rail guides from SKF are modern machine components used in the production of linear guiding systems with unlimited travel (**fig. 10**).

They usually consist of a profile rail with four precision-ground raceways and a slide unit with four ball circulation paths. This design offers numerous benefits. The square configuration of the raceways results in a guidance system with good rigidity, capable of withstanding moment loads in all directions.

The load-carrying capacity is equal in all four directions (**fig. 11**). Ready-to-mount units guarantee economy and simplicity of mounting. Installation and adjustment procedures are reduced to a minimum. The design of the system is such that inaccuracies of the adjacent components can be accommodated.

SKF profile rail guides are noted for their ease of maintenance and reliability. As standard, they are provided with grease nipple and seals on all sides. The two-point contact of the rolling elements with the raceways permits high operational speeds with quiet running and a low coefficient of friction. Good running accuracy is assured throughout the operational life of the system. Guides with specific preload can be supplied for special requirements. This is achieved through selection. Preload selection depends on the load and stiffness specifications.

Fig. 10



Fig. 11

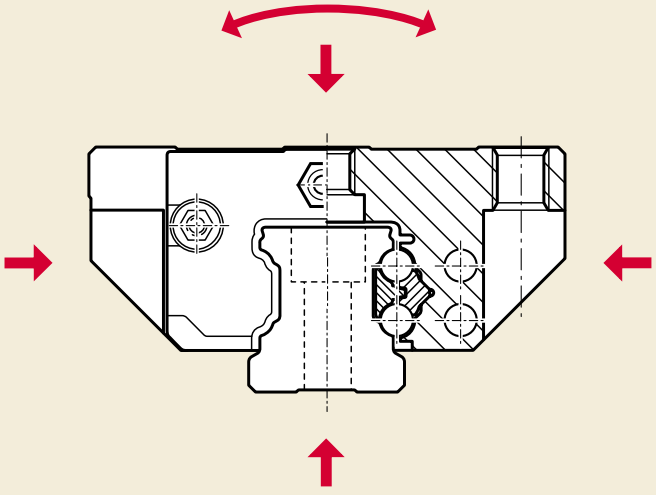



Publication nr. 6229 EN

N.B.:
In addition to this catalogue, all product brochures are available on **www.skf.com** *as PDF files.*

Ordering key

LLR [ ] [ ] [ ] [ ] [ ] [ ] - [ ] [ ] [ ] [ ]

Type

Product code:

Bellows (for bellows only)	HB
Carriage (carriage only)	HC
Rail (rail only)	HR
System (carriage and rail)	HS
Accessories, if order separately	HZ

Size:

15, 20, 25, 30, 35, 45

Carriage type:

Carriage, standard width	A
Carriage, standard width, short	SA
Carriage, standard width, long	LA
Carriage, slim line	U
Carriage, slim line, short	SU
Carriage, slim line, long	LU
Carriage, slim line, high	R
Carriage, slim line, high, long	LR

Ball retainer:

Carriage with ball retainer	B
Carriage without ball retainer	no sign

Number of carriages per rail track: 1, 2, C9, n

Preload classes:

Up to 10 µm clearance, play	T0
Preload 0,02×C, light preload	T1
Preload 0,08×C, medium preload	T2*
Preload 0,12×C, high preload	T3*

Rail length in mm

Precision class (for carriage and rail):

Standard precision	P5
Medium precision	P3
High precision	P1*
Super precision	P01*
Ultra precision	P001*

Number of parallel rail tracks:

One rail alone	W1
Two rails in parallel	W2

Accessories & Option symbols:

Jointed rail track	A
Bellows, system complete with bellows	B
Bellow Kit, type 2 (carriage thru the end of the rail)	B2
Bellow Kit, type 4 (between two carriages)	B4
Rail, customized accessories to drawing number	
Rail with cover strip and cover strip guard type 2 (aluminium)	D2
Distance between end face and the first hole (mm):	
Symmetric holes as standard	E = 0
Carriage mounted on rail	M
Scraper plates	S1
Two piece front seals	S2
Seal Kit, two piece front seals with scraper plates	S3

* On request

Example 1: LLR HB 25 - 15 Bellow only with 15 folds

Example 2: LLR HC 25 A T1 P5 Carriage only

Example 3: LLR HS 25 - 1000 P5 Rail only

Example 4: LLR HS 25 A T0 - 1000 P5 Complete system with carriage and rail

Example 5: LLR HS 25 A [ ] [ ] T0 - 1000 P5 W2 / D2 S2 Complete system ind. rail with cover strip and cover strip guard plus two piece front seal

Accessories for profile rail guides

Scraper plate

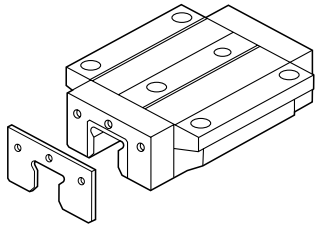

Size	Items
15	LLRHZ 15 S1
20	LLRHZ 20 S1
25	LLRHZ 25 S1
30	LLRHZ 30 S1
35	LLRHZ 35 S1
45	LLRHZ 45 S1

Accessories for profile rail guides

Two-piece front seal

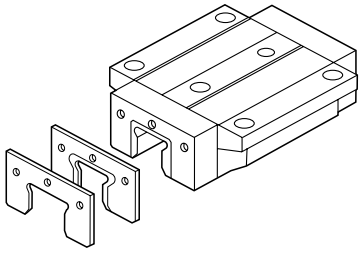

Size	Items
15	LLRHZ 15 S2
20	LLRHZ 20 S2
25	LLRHZ 25 S2
30	LLRHZ 30 S2
35	LLRHZ 35 S2
45	LLRHZ 45 S2

Accessories for profile rail guides

Seal kit

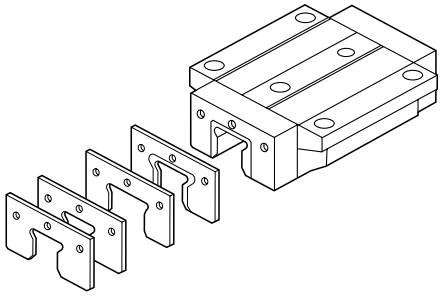

Size	Items
15	LLRHZ 15 S3
20	LLRHZ 20 S3
25	LLRHZ 25 S3
30	LLRHZ 30 S3
35	LLRHZ 35 S3
45	LLRHZ 45 S3

LLRHS .. SA
LLRHS .. A
LLRHS .. LA

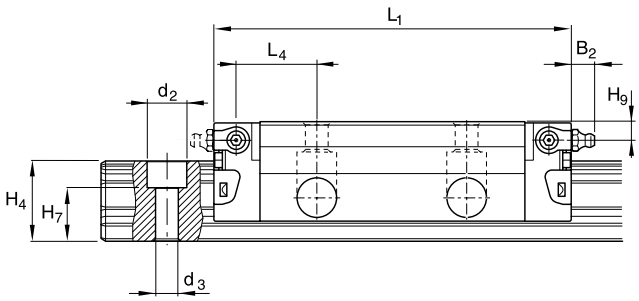

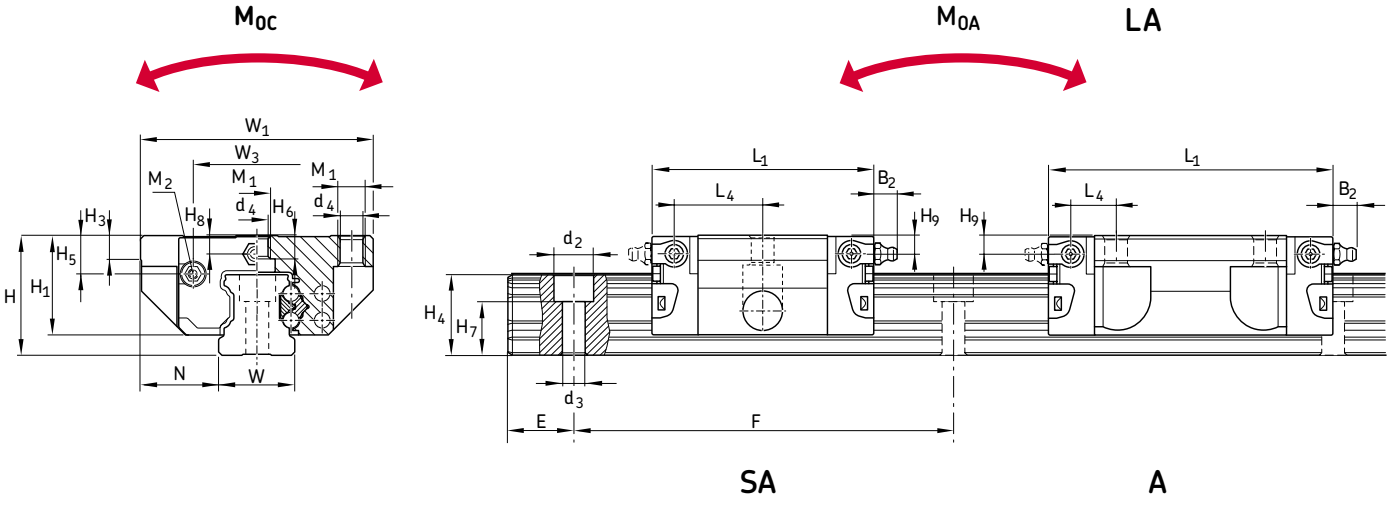

Designations	Dimensions																	
	W_1	W	N	L_1	L_2	H	H_1	H_4[1)]	H_4[2)]	H_3	W_2	L_3	L_5	W_3	H_5	L_6	L_4	H_8	H_9
	mm																		
LLRHS 15 SA	47	15	16	44,7	25,7	24	19,9	16,3	16,2	5	38	–	–	24,55	6,7	16,25	17,85	3,2	3,2
LLRHS 15 A	47	15	16	58,2	39,2	24	19,9	16,3	16,2	5	38	30	26	24,55	6,7	8	9,6	3,2	3,2
LLRHS 15 LA	47	15	16	72,6	53,6	24	19,9	16,3	16,2	5	38	30	26	24,55	6,7	15,2	16,8	3,2	3,2
LLRHS 20 SA	63	20	21,5	57,3	31,9	30	25,35	20,75	20,55	6	53	–	–	32,5	7,3	22,95	22,95	3,35	3,35
LLRHS 20 A	63	20	21,5	75	49,6	30	25,35	20,75	20,55	6	53	40	35	32,5	7,3	11,8	11,8	3,35	3,35
LLRHS 20 LA	63	20	21,5	91	65,6	30	25,35	20,75	20,55	6	53	40	35	32,5	7,3	19,8	19,8	3,35	3,35
LLRHS 25 SA	70	23	23,5	67	38,6	36	29,9	24,45	24,25	7,5	57	–	–	38,3	11,5	25,35	26,5	5,5	5,5
LLRHS 25 A	70	23	23,5	86,2	57,8	36	29,9	24,45	24,25	7,5	57	45	40	38,3	11,5	12,45	13,6	5,5	5,5
LLRHS 25 LA	70	23	23,5	107,9	79,5	36	29,9	24,45	24,25	7,5	57	45	40	38,3	11,5	23,3	24,45	5,5	5,5
LLRHS 30 SA	90	28	31	75,3	45	42	35,35	28,55	28,35	7	72	–	–	48,4	14,6	28,8	30,5	6,05	6,05
LLRHS 30 A	90	28	31	97,7	67,4	42	35,35	28,55	28,35	7	72	52	44	48,4	14,6	14	15,7	6,05	6,05
LLRHS 30 LA	90	28	31	119,7	89,4	42	35,35	28,55	28,35	7	72	52	44	48,4	14,6	25	26,7	6,05	6,05
LLRHS 35 SA	100	34	33	84,9	51,4	48	40,4	32,15	31,85	8	82	–	–	58	17,35	32,7	34,2	6,9	6,9
LLRHS 35 A	100	34	33	110,5	77	48	40,4	32,15	31,85	8	82	62	52	58	17,35	14,5	16	6,9	6,9
LLRHS 35 LA	100	34	33	139	105,5	48	40,4	32,15	31,85	8	82	62	52	58	17,35	28,75	30,25	6,9	6,9
LLRHS 45 A	120	45	37,5	137,6	97	60	50,3	40,15	39,85	10	100	80	60	69,8	20,9	17,3	19,3	8,2	8,2
LLRHS 45 LA	120	45	37,5	174,1	133,5	60	50,3	40,15	39,85	10	100	80	60	69,8	20,9	35,5	37,5	8,2	8,2

[1)] With rail cover strip
[2)] Without rail cover strip

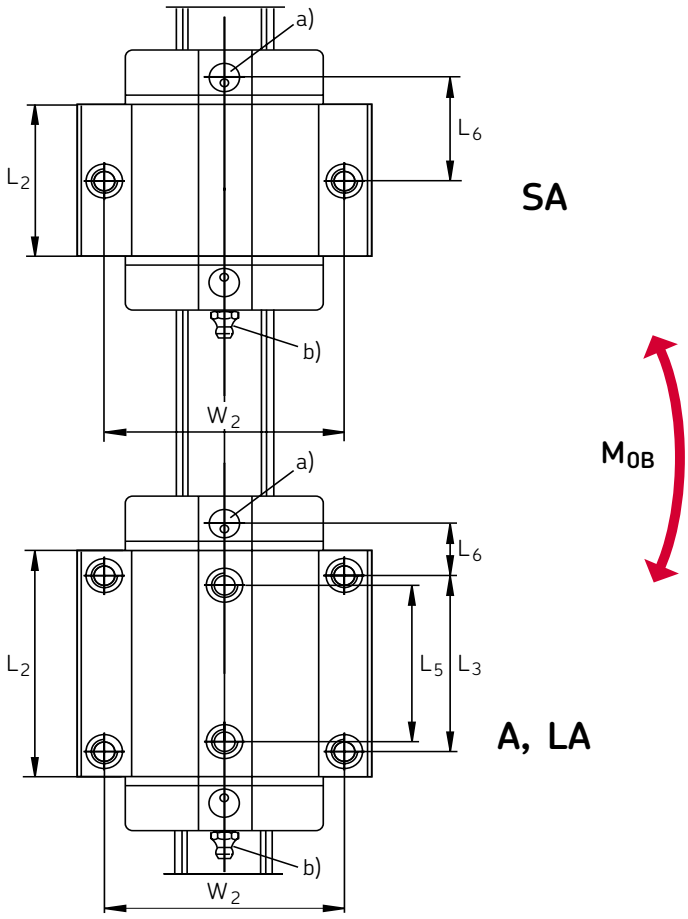

Legend:
a) For O-ring
Size 15: ∅ 4×1,0 (mm)
Size 20 - 35: ∅ 5×1,0 (mm)
Open the lube hole if required.

b) Lube nipple, size 15 and 20:
Funnel-type nipple
Type A – Thread size M3, DIN 3405
B2 = 1,6 mm
Size 25 to 35: AM 6 DIN 71412
B2 = 9,5 mm

Lubricating nipples form part of the delivery and have been included. When using other lubricating nipples, it is important to not exceed the correct screw depth of 8 mm.

Installation is possible on all sides.

Designations	Dimensions									Basic load ratings				Mass
	H_6	H_7 ±0,5	d_4	M_1	d_2	d_3	M_2	E_{min}	F	C	C_0	$M_{0A/0B}$	M_{0C}	
	mm									N		Nm		kg
LLRHS 15 SA	–	10,3	4,3	M5×5,2	7,4	4,4	M2,5–3,5 deep	10	60	5 400	8 100	28	80	0,15
LLRHS 15 A	4,4	10,3	4,3	M5×5,2	7,4	4,4	M2,5–3,5 deep	10	60	7 800	13 500	71	130	0,2
LLRHS 15 LA	4,4	10,3	4,3	M5×5,2	7,4	4,4	M2,5–3,5 deep	10	60	10 000	20 000	150	190	0,3
LLRHS 20 SA	–	13,2	5,3	M6×7,7	9,4	6	M3–5 deep	10	60	12 400	13 600	58	170	0,3
LLRHS 20 A	5,2	13,2	5,3	M6×7,7	9,4	6	M3–5 deep	10	60	18 800	24 400	165	310	0,45
LLRHS 20 LA	5,2	13,2	5,3	M6×7,7	9,4	6	M3–5 deep	10	60	24 400	35 200	330	450	0,55
LLRHS 25 SA	–	15,2	6,7	M8×9,3	11	7	M3–5 deep	10	60	15 900	18 200	94	260	0,5
LLRHS 25 A	7	15,2	6,7	M8×9,3	11	7	M3–5 deep	10	60	22 800	30 400	240	430	0,65
LLRHS 25 LA	7	15,2	6,7	M8×9,3	11	7	M3–5 deep	10	60	30 400	45 500	510	650	0,9
LLRHS 30 SA	–	17	8,5	M10×11,0	15	9	M3–5 deep	12	80	22 100	24 800	150	430	0,8
LLRHS 30 A	7,9	17	8,5	M10×11,0	15	9	M3–5 deep	12	80	31 700	41 300	380	720	1,1
LLRHS 30 LA	7,9	17	8,5	M10×11,0	15	9	M3–5 deep	12	80	40 000	57 800	715	1 000	1,5
LLRHS 35 SA	–	20,5	8,5	M10×12,0	15	9	M3–5 deep	12	80	29 300	32 400	220	700	1,2
LLRHS 35 A	10,2	20,5	8,5	M10×12,0	15	9	M3–5 deep	12	80	41 900	54 000	565	1 160	1,6
LLRHS 35 LA	10,2	20,5	8,5	M10×12,0	15	9	M3–5 deep	12	80	55 600	81 000	1 215	1 740	2,25
LLRHS 45 A	14,4	23,5	10,4	M12×15,0	20	14	M4–7 deep	16	105	68 100	85 700	1 130	2 310	3
LLRHS 45 LA	12,4	23,5	10,4	M12×15,0	20	14	M4–7 deep	16	105	90 400	128 500	2 425	3 470	4,3

LLRHS .. SU
LLRHS .. U
LLRHS .. LU

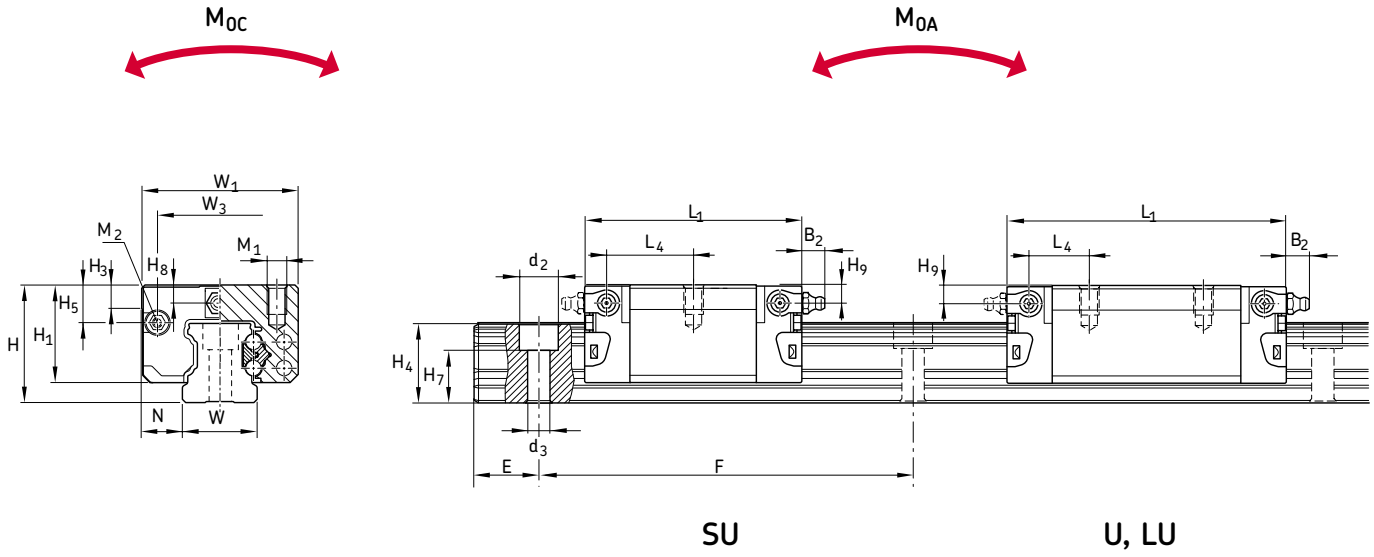

SU **U, LU**

Designations	Dimensions																	
	W_1	W	N	L_1	L_2	H	H_1	H_4 [1]	H_4 [2]	H_3	W_2	L_3	W_3	H_5	L_6	L_4	H_8	H_9
	mm																	
LLRHS 15 SU	34	15	9,5	44,7	25,7	24	19,9	16,3	16,2	5	26	–	24,55	6,7	16,25	17,85	3,2	3,2
LLRHS 15 U	34	15	9,5	58,2	39,2	24	19,9	16,3	16,2	5	26	26	24,55	6,7	10	11,6	3,2	3,2
LLRHS 15 LU	34	15	9,5	72,6	53,6	24	19,9	16,3	16,2	5	26	26	24,55	6,7	17,2	18,8	3,2	3,2
LLRHS 20 SU	44	20	12	57,3	31,9	30	25,35	20,75	20,55	6	32	–	32,5	7,3	22,95	22,95	3,35	3,35
LLRHS 20 U	44	20	12	75	49,6	30	25,35	20,75	20,55	6	32	36	32,5	7,3	13,8	13,8	3,35	3,35
LLRHS 20 LU	44	20	12	91	65,6	30	25,35	20,75	20,55	6	32	50	32,5	7,3	14,8	14,8	3,35	3,35
LLRHS 25 SU	48	23	12,5	67	38,6	36	29,9	24,45	24,25	7,5	35	–	38,3	11,5	25,35	26,5	5,5	5,5
LLRHS 25 U	48	23	12,5	86,2	57,8	36	29,9	24,45	24,25	7,5	35	35	38,3	11,5	17,45	18,6	5,5	5,5
LLRHS 25 LU	48	23	12,5	107,9	79,5	36	29,9	24,45	24,25	7,5	35	50	38,3	11,5	20,8	21,95	5,5	5,5
LLRHS 30 SU	60	28	16	75,3	45	42	35,35	28,55	28,35	7	40	–	48,4	14,6	28,8	30,5	6,05	6,05
LLRHS 30 U	60	28	16	97,7	67,4	42	35,35	28,55	28,35	7	40	40	48,4	14,6	20	21,7	6,05	6,05
LLRHS 30 LU	60	28	16	119,7	89,4	42	35,35	28,55	28,35	7	40	60	48,4	14,6	21	22,7	6,05	6,05
LLRHS 35 SU	70	34	18	84,9	51,4	48	40,4	32,15	31,85	8	50	–	58	17,35	32,7	34,2	6,9	6,9
LLRHS 35 U	70	34	18	110,5	77	48	40,4	32,15	31,85	8	50	50	58	17,35	20,5	22	6,9	6,9
LLRHS 35 LU	70	34	18	139	105,5	48	40,4	32,15	31,85	8	50	72	58	17,35	23,75	25,25	6,9	6,9
LLRHS 45 U	86	45	20,5	137,6	97	60	50,3	40,15	39,85	10	60	60	69,8	20,9	27,3	29,3	8,2	8,2
LLRHS 45 LU	86	45	20,5	174,1	133,5	60	50,3	40,15	39,85	10	60	80	69,8	20,9	35,5	37,5	8,2	8,2

[1] With rail cover strip
[2] Without rail cover strip

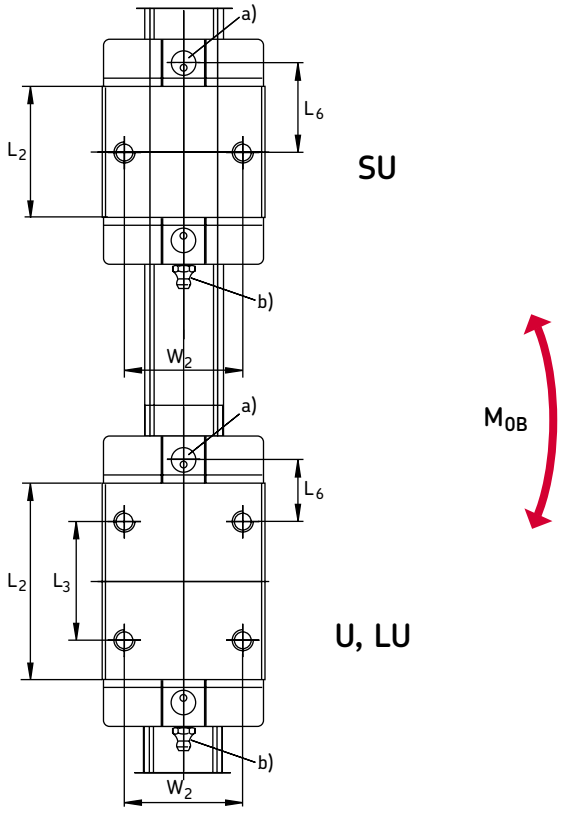

Legend:
a) For O-ring
Size 15: ∅ 4×1,0 (mm)
Size 20 - 35: ∅ 5×1,0 (mm)
Open the lube hole if required.

b) Lube nipple, size 15 and 20:
Funnel-type nipple
Type A – Thread size M3, DIN 3405
B2 = 1,6 mm
Size 25 to 35: AM 6 DIN 71412
B2 = 9,5 mm

Lubricating nipples form part of the delivery and have been included. When using other lubricating nipples, it is important to not exceed the correct screw depth of 8 mm.

Installation is possible on all sides.

Designations	Dimensions							Basic load ratings				Mass
	H_7 ±0,5	M_1	d_2	d_3	M_2	E_{min}	F	C	C_0	$M_{0A/0B}$	M_{0C}	
	mm							N		Nm		kg
LLRHS 15 SU	10,3	M4×6,0	7,4	4,4	M2,5–3,5 deep	10	60	5 400	8 100	28	80	0,1
LLRHS 15 U	10,3	M4×6,0	7,4	4,4	M2,5–3,5 deep	10	60	7 800	13 500	71	130	0,15
LLRHS 15 LU	10,3	M4×6,0	7,4	4,4	M2,5–3,5 deep	10	60	10 000	20 200	150	190	0,2
LLRHS 20 SU	13,2	M5×7,5	9,4	6	M3–5 deep	10	60	12 400	13 600	58	170	0,25
LLRHS 20 U	13,2	M5×7,5	9,4	6	M3–5 deep	10	60	18 800	24 400	165	310	0,35
LLRHS 20 LU	13,2	M5×7,5	9,4	6	M3–5 deep	10	60	24 400	35 200	330	450	0,45
LLRHS 25 SU	15,2	M6×9,0	11	7	M3–5 deep	10	60	15 900	18 200	94	260	0,35
LLRHS 25 U	15,2	M6×9,0	11	7	M3–5 deep	10	60	22 800	30 400	240	430	0,5
LLRHS 25 LU	15,2	M6×9,0	11	7	M3–5 deep	10	60	30 400	45 500	510	650	0,65
LLRHS 30 SU	17	M8×12,0	15	9	M3–5 deep	12	80	22 100	24 800	150	430	0,6
LLRHS 30 U	17	M8×12,0	15	9	M3–5 deep	12	80	31 700	41 300	380	720	0,85
LLRHS 30 LU	17	M8×12,0	15	9	M3–5 deep	12	80	40 000	57 800	715	1 000	1,1
LLRHS 35 SU	20,5	M8×13,0	15	9	M3–5 deep	12	80	29 300	32 400	220	700	0,9
LLRHS 35 U	20,5	M8×13,0	15	9	M3–5 deep	12	80	41 900	54 000	565	1 160	1,25
LLRHS 35 LU	20,5	M8×13,0	15	9	M3–5 deep	12	80	55 600	81 000	1 215	1 740	1,7
LLRHS 45 U	23,5	M10×18,0	20	14	M4–7 deep	16	105	68 100	85 700	1 130	2 310	2,4
LLRHS 45 LU	23,5	M10×18,0	20	14	M4–7 deep	16	105	90 400	128 500	2 425	3 470	3,2

LLRHS .. R
LLRHS .. LR



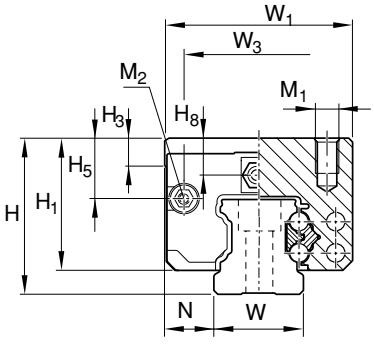

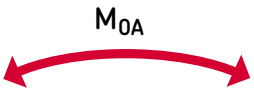

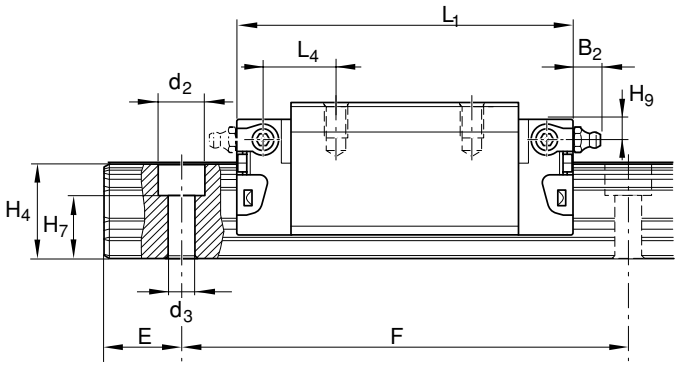

R, LR

Designations	Dimensions																	
	W_1	W	N	L_1	L_2	H	H_1	H_4[1)]	H_4[2)]	H_3	W_2	L_3	W_3	H_5	L_6	L_4	H_8	H_9
	mm																	
LLRHS 15 R	34	15	9,5	58,2	39,2	28	23,9	16,3	16,2	5	26	26	24,55	10,7	10	11,6	7,2	7,2
LLRHS 25 R	48	23	12,5	86,2	57,8	40	33,9	24,45	24,25	7,5	35	35	38,3	15,5	17,45	18,6	9,5	9,5
LLRHS 25 LR	48	23	12,5	107,9	79,5	40	33,9	24,45	24,25	7,5	35	50	38,3	15,5	20,8	21,95	9,5	9,5
LLRHS 30 R	60	28	16	97,7	67,4	45	38,35	28,55	28,35	7	40	40	48,4	17,6	20	21,7	9,05	9,05
LLRHS 30 LR	60	28	16	119,7	89,4	45	38,35	28,55	28,35	7	40	60	48,4	17,6	21	22,7	9,05	9,05
LLRHS 35 R	70	34	18	110,5	77	55	47,4	32,15	31,85	8	50	50	58	24,35	20,5	22	13,9	13,9
LLRHS 35 LR	70	34	18	139	105,5	55	47,4	32,15	31,85	8	50	72	58	24,35	23,75	25,25	13,9	13,9
LLRHS 45 R	86	45	20,5	137,6	97	70	60,3	40,15	39,85	10	50	60	69,8	30,9	27,3	29,3	18,2	18,2
LLRHS 45 LR	86	45	20,5	174,1	133,5	70	60,3	40,15	39,85	10	60	80	69,8	30,9	35,5	37,5	18,2	18,2

[1)] With rail cover strip
[2)] Without rail cover strip

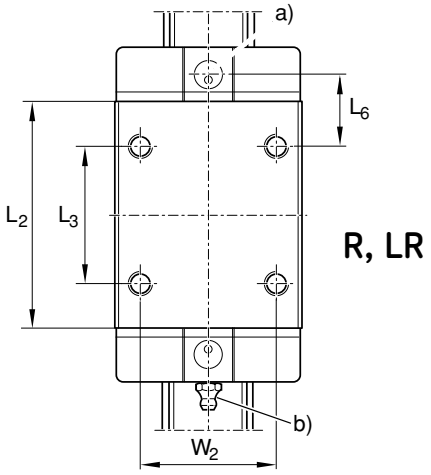

R, LR



Legend:
a) For O-ring
Size 15: ∅ 4×1,0 (mm)
Size 20 - 35: ∅ 5×1,0 (mm)
Open the lube hole if required.

b) Lube nipple, size 15 and 20:
Funnel-type nipple
Type A – Thread size M3, DIN 3405
B2 = 1,6 mm
Size 25 to 35: AM 6 DIN 71412
B2 = 9,5 mm

Lubricating nipples form part of the delivery and have been included. When using other lubricating nipples, it is important to not exceed the correct screw depth of 8 mm.

Installation is possible on all sides.

Designations	Dimensions							Basic load ratings				Mass
	H_7 ±0,5	M_1	d_2	d_3	M_2	E_{min}	F	C	C_0	$M_{0A/0B}$	M_{0C}	
	mm							N		Nm		kg
LLRHS 15 R	10,3	M4 × 6,0	7,4	4,4	M2,5 – 3,5 deep	10	60	7 800	13 500	71	130	0,2
LLRHS 25 R	15,2	M6 × 9,0	11	7	M3 – 5 deep	10	60	22 800	30 400	240	430	0,6
LLRHS 25 LR	15,2	M6 × 9,0	11	7	M3 – 5 deep	10	60	30 400	45 500	510	650	0,8
LLRHS 30 R	17	M8 × 12,0	15	9	M3 – 5 deep	12	80	31 700	41 300	380	720	0,95
LLRHS 30 LR	17	M8 × 12,0	15	9	M3 – 5 deep	12	80	40 000	57 800	715	1 000	1,2
LLRHS 35 R	20,5	M8 × 13,0	15	9	M3 – 5 deep	12	80	41 900	54 000	565	1 160	1,55
LLRHS 35 LR	20,5	M8 × 13,0	15	9	M3 – 5 deep	12	80	55 600	81 000	1 215	1 740	2,1
LLRHS 45 R	23,5	M10 × 18,0	20	14	M4 – 7 deep	16	105	68 100	85 700	1 130	2 310	3
LLRHS 45 LR	23,5	M10 × 18,0	20	14	M4 – 7 deep	16	105	90 400	128 500	2 425	3 470	4,1

Applications

In response to industry's ultimate need to produce more with less, SKF has combined its knowledge and experience with the latest technology to develop solutions for your specific conditions. Whether your goal is to design equipment that provides more customer value, or to increase overall profitability, with SKF experience and expertise, you're likely to find a real solution.

Woodworking machine

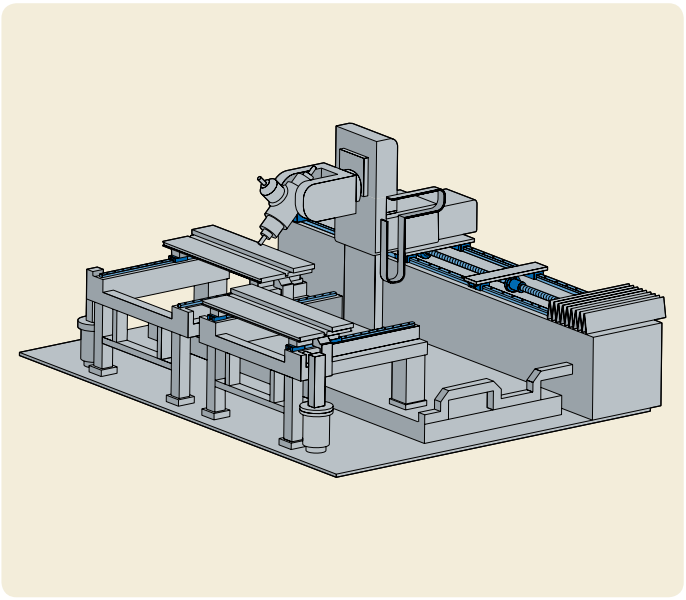

Components application
a) Profile rail guides
b) Precision ball screws

Encapsulating chips with plastic

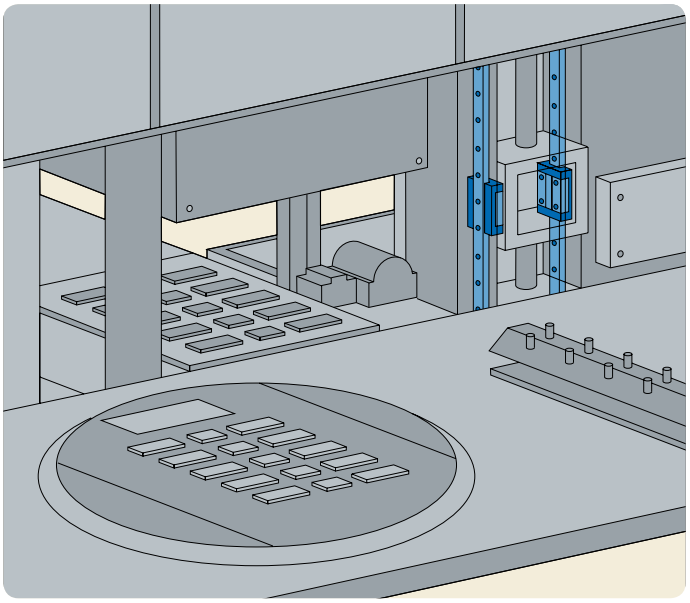

Components application
a) Profile rail guides

Handling

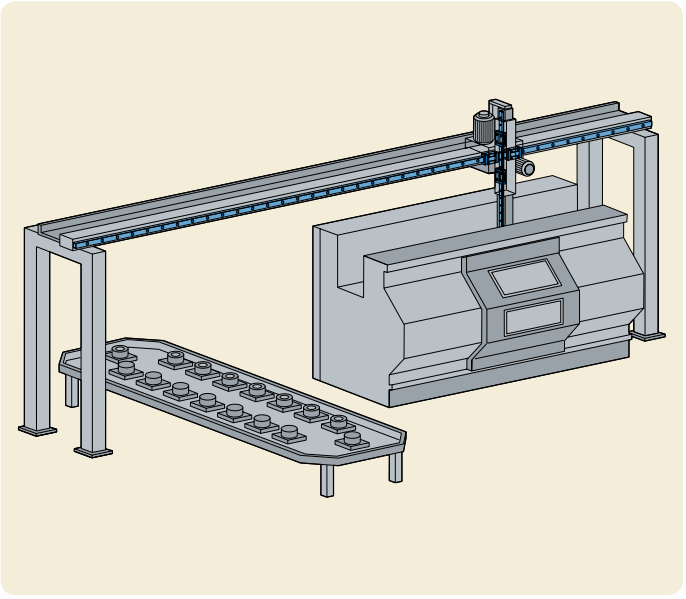

Components application
a) Profile rail guides

Packaging

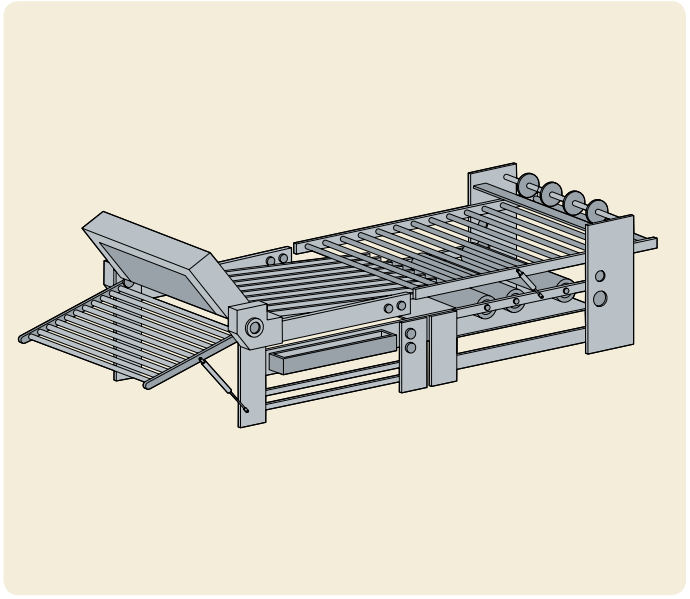

Components application
a) Profile rail guides

Miniature profile rail guides

In response to the market trend for increased performance with a minimum of mounting space, SKF has extended its product range by miniature profile rail guides (**fig. 12**).

These linear guides are designed above all for applications in precision mechanics, medical engineering, microassembly and the optics industry.

The close cooperation with numerous customers, combined with SKF's experience, has resulted in a range of miniature rail guides that sets new standards, especially when the mounting space is limited, SKF miniature profile rail guides are an excellent choice, as they have a high load-carrying capacity combined with a compact design.

SKF offers its customers an excellent technical advisory service on the spot as well as a vast modular range for the performance increase of machines and installations.

SKF offers these profile rail guides in four sizes (7, 9, 12 and 15 mm) and various slide options to cover most application requirements.

Compact design: thanks to their simple structure, miniature profile rail guides are compact and economical. This small and lightweight product is very suitable for high-speed linear motion up to 3 m/s.

Long-life: gothic arch grooves at the raceway contacts enable the slide to sustain loads and moments from any direction. The raceway shape offers a large load capacity and a long lifetime due to the contact between the raceways and the balls.

Corrosion resistant: all parts of the system are made of stainless steel or plastic material and are thus resistant to corrosion.

Easy to maintain: oil holes in the end caps of the carriage make it easy to relubricate the system.

Structure: four-point contact ball recirculation system with identical load angles and 2 ball recirculation paths per carriage for unlimited stroke.

Range: four different types (7, 9, 12, 15) comprising different widths and carriage lengths (**fig. 13**).

Fig. 12

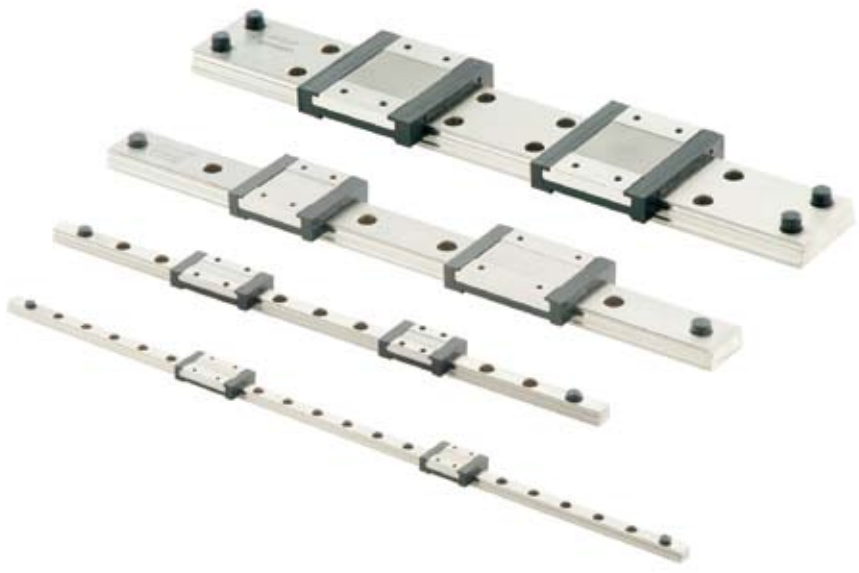

Fig. 13

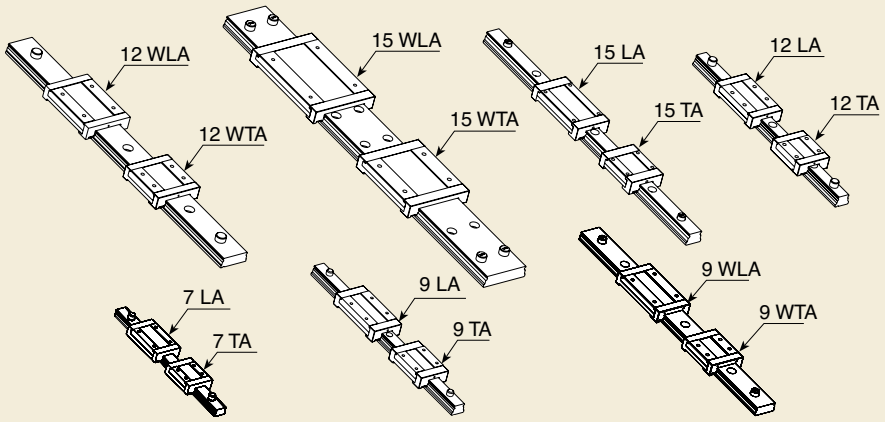

N.B.:
In addition to this catalogue, all product brochures are available on **www.skf.com** *as PDF files.*



Publication nr. 4753 EN

The preload possibilities for carriage are given in **table 14**, and the technical data in **table 15**.

Table 14

	T0*	T1*	T2*
TA	×	×	×
LA	×	×	×

* T0 = standard – light preload
* T1 = medium preload
* T2 = heavy preload

Preload possibilities for carriage

Table 15

Rail material:	Stainless steel 1.4034
Carriage material:	Stainless steel 1.4034 with return zones of POM
Ball material:	Stainless steel 1.4034
Sealing material:	Desmopan
Temperature range:	from – 20 °C up to + 80 °C
Speed:	up to 3 m/s max.
Acceleration:	up to 80 m/s^2 max.

Technical data

Fig. 14

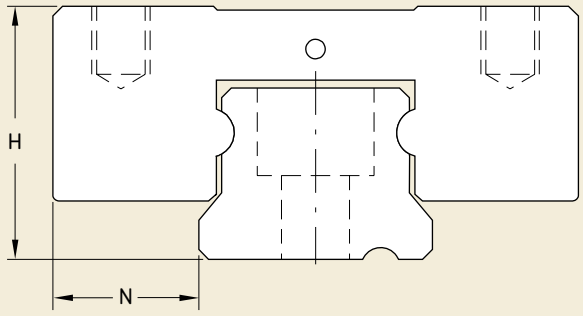

System accuracy

The system accuracy (**fig. 14**) and the system tolerance (**fig. 15**) of different guidance systems are given in **table 16**.

Fig. 15

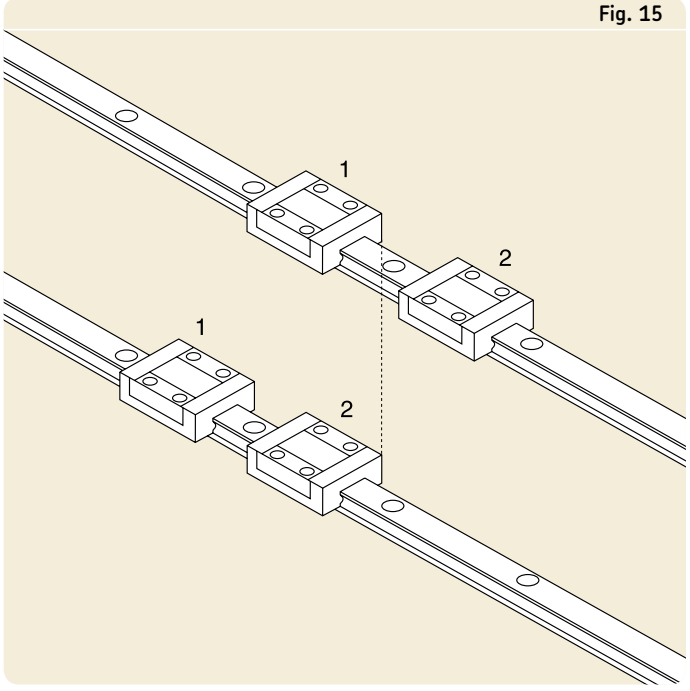

System tolerance

Table 16

Dimension		**Class** P1	P5
		µm	µm
H*	Dimension tolerance	± 10	± 20
N*	Dimension tolerance	± 15	± 25
$\Delta H_{1)}$**	Maximum tolerance for paired systems or carriages at identical rail position	± 7	± 15
ΔN**	Maximum tolerance for paired systems or carriages at identical rail position	± 7	± 15

* The tolerances apply over the entire guide length for any combination of carriage and rail.
** The dimensions ΔH and ΔN relate to the ideal centre of the carriage. Each dimension is derived from the mean value of two measured points with identical centre distance.

System accuracy and tolerance of different guidance systems

The running parallelism accuracy in operation of paired systems are given in **diagram 1** and **fig. 16**.

Diagram 1

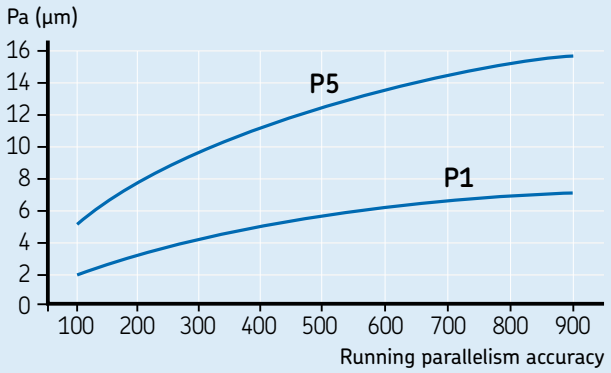

Fig. 16

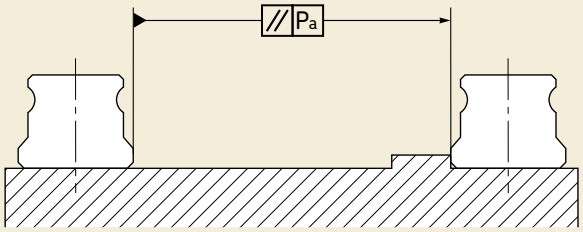

The positioning (distance) tolerance of rail attachment holes can be seen in **figure 17**.

Fig. 17

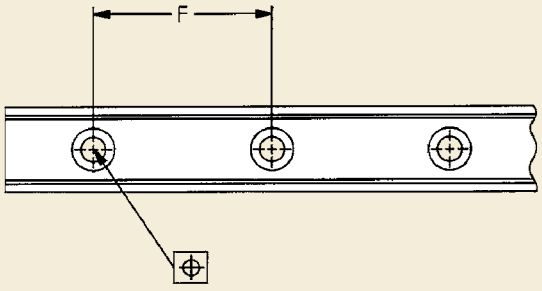

Ordering key

LLM								-					E=0

Type

Rail type:
Standard rail H
Wide rail W

Product code:
System (rail + carriage) S
Rail R
Carriage C

Size:
7, 9, 12, 15

Carriage types:
Standard carriage TA
Long carriage LA

Option:
Carriage with seals R
Carriage without seal no sign

Number of carriages:
1, 2, C9, n

Preload:
Light clearance T0
Medium preload T1
Preloaded T2

Length of rail track:
Max 1 000 mm

Precision class:
Standard precision (suitable for most applications) P5
High precision P1

Number of rail track used in parallel:
One rail alone W1
Two rails in parallel W2

Auxiliary symbols:
Plastic end-stop no sign
Steel end-stop M

Distance between end face and the first hole (mm):
Symmetric holes standard E=0

Example: LLM HS 12 TA R 2 T0 - 700 P1 W2 M E=0

LLMHR

Standard rails

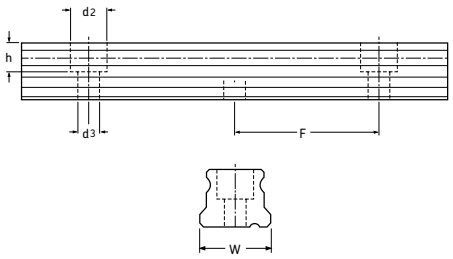

Designations	Dimensions					Max. length
	W	F	d_2	d_3	h	
	mm					
LLMHR 7	7	15	4,5	2,5	2,5	1 000
LLMHR 9	9	20	6	3,5	3,5	1 000
LLMHR 12	12	25	6	3,5	4,5	1 000
LLMHR 15	15	40	6	3,5	4,5	1 000

LLMWR

Wide rails

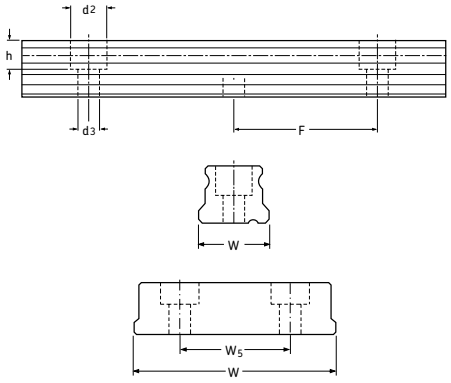

LLMWR .. 15 design

Designations	Dimensions						Max. length
	W	W_5	F	d_2	d_3	h	
	mm						
LLMWR 9	18	0	30	6	3,5	4,5	1 000
LLMWR 12	24	0	40	8	4,5	4,5	1 000
LLMWR 15	42	23	40	8	4,5	4,5	1 000

LLMHC .. TA

Standard carriages

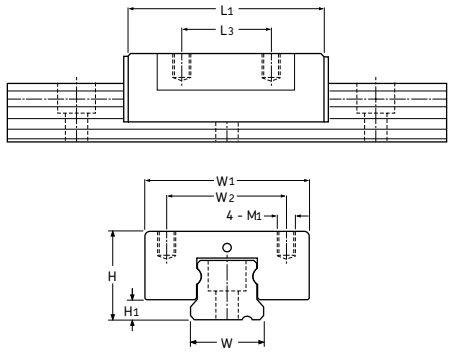

Designations	Dimensions								Load-carrying capacities dynamic	static
	W	W_1	W_2	H	L_1	L_3	M_1	H_1	C	C_0
	mm									
LLMHC 7 TA	7	17	12	8	22	8	M2×2,5	1,5	860	1 670
LLMHC 9 TA	9	20	15	10	30	10	M3×3	2	1 850	3 130
LLMHC 12 TA	12	27	20	13	33	15	M3×3,5	3	2 550	4 000
LLMHC 15 TA	15	32	25	16	41,5	20	M3×4	4	2 880	5 390

LLMWC .. TA

Carriages for wide rails

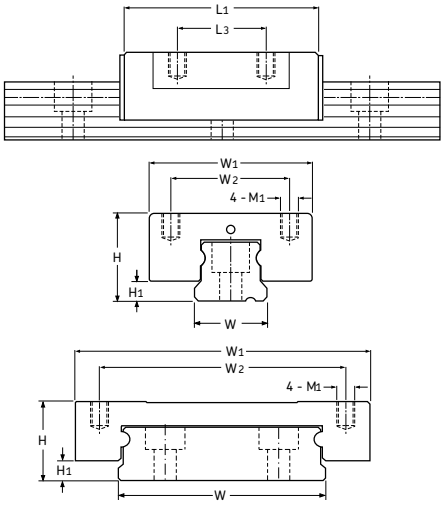

LLMWC .. 15 design

Designations	Dimensions								Load-carrying capacities	
									dynamic	static
	W	W_1	W_2	H	L_1	L_3	M_1	H_1	C	C_0
	mm									
LLMWC 9 TA	18	30	21	12	36,5	12	M3×3	2	1 785	3 330
LLMWC 12 TA	24	40	28	14	42,5	15	M3×3,5	3	3 300	5 780
LLMWC 15 TA	42	60	45	16	51,2	20	M4×4,5	4	3 890	7 060

LLMHC .. LA

Long carriages

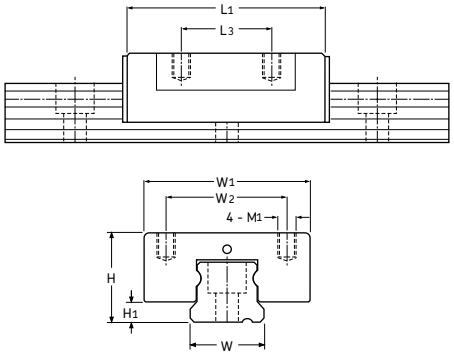

Designations	Dimensions								Load-carrying capacities	
									dynamic	static
	W	W_1	W_2	H	L_1	L_3	M_1	H_1	C	C_0
	mm									
LLMHC 7 LA	7	17	12	8	29,5	12	M2×2,5	1,5	1 400	2 700
LLMHC 9 LA	9	20	15	10	38,5	15	M3×3	2	2 295	4 270
LLMHC 12 LA	12	27	20	13	45	20	M3×3,5	3	3 470	6 225
LLMHC 15 LA	15	32	25	16	57,5	25	M3×4	4	4 670	8 720

LLMWC .. LA

Long carriages for wide rails

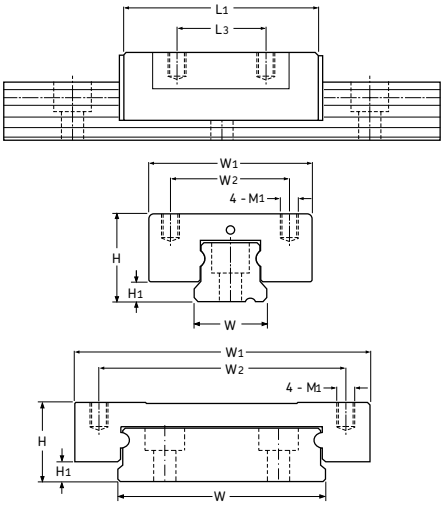

Designations	Dimensions								Load-carrying capacities	
									dynamic	static
	W	W_1	W_2	H	L_1	L_3	M_1	H_1	C	C_0
	mm									
LLMWC 9 LA	18	30	23	12	48,5	24	M3×3	2	2 640	4 900
LLMWC 12 LA	24	40	28	14	56	28	M3×3,5	3	4 150	8 000
LLMWC 15 LA	42	60	45	16	70,5	35	M4×4,5	4	5 830	10 600

Applications

In response to industry's ultimate need to produce more with less, SKF has combined its knowledge and experience with the latest technology to develop solutions for your specific conditions. Whether your goal is to design equipment that provides more customer value, or to increase overall profitability, with SKF experience and expertise, you're likely to find a real solution.

Laboratory equipment

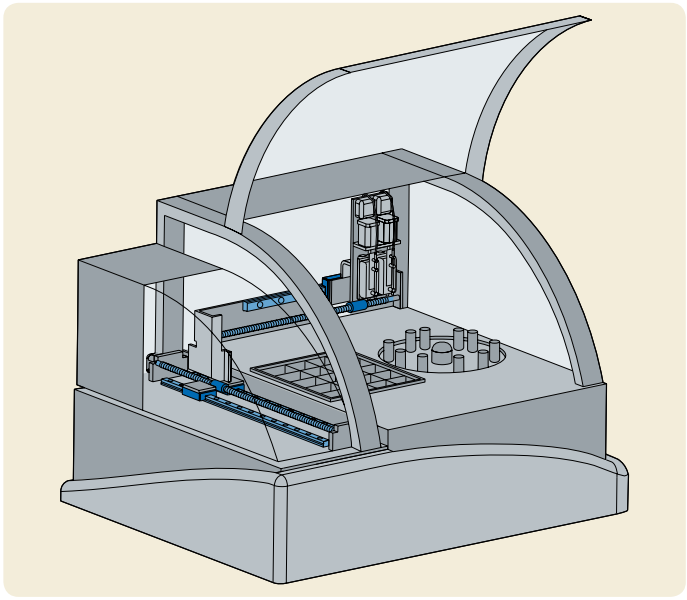

Components application
a) Miniature profile rail guides
b) Miniature ball screws
c) Miniature slides

PCB drilling and routing machine

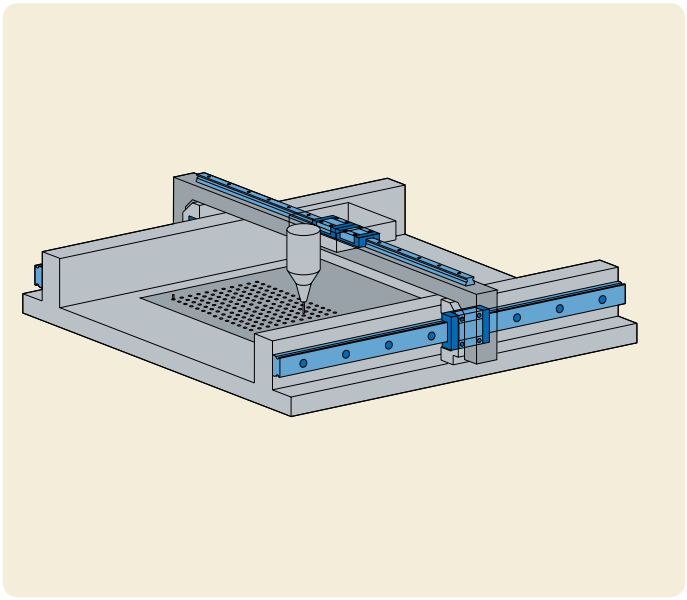

Components application
a) Miniature profile rail guides

Pick-and-place manipulators

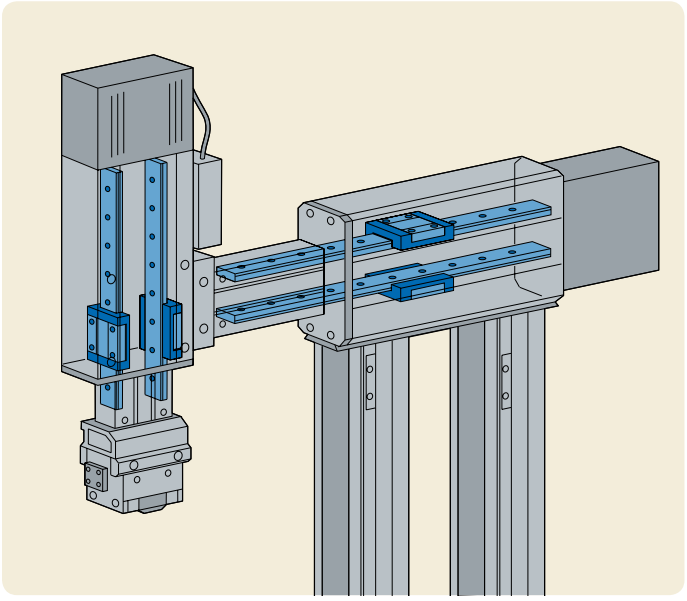

Components application
a) Miniature profile rail guides

Pneumatic industry - Compact piston rod cylinder

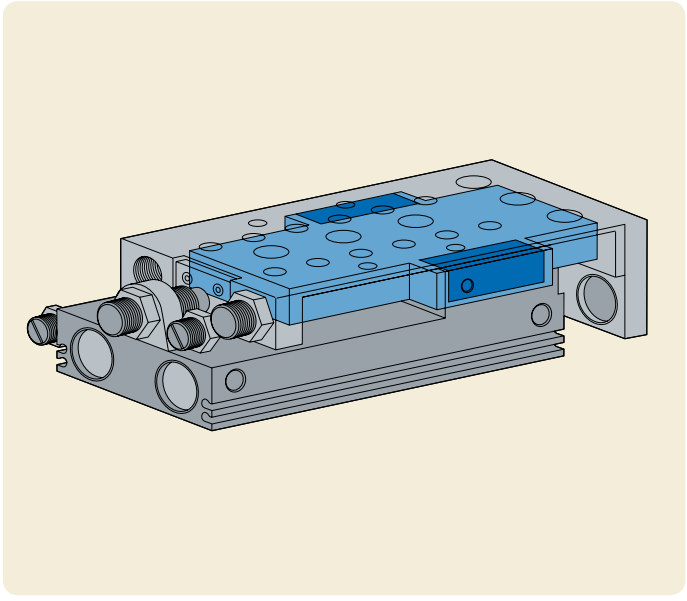

Components application
a) Integrated miniature slides

More precision for more performance

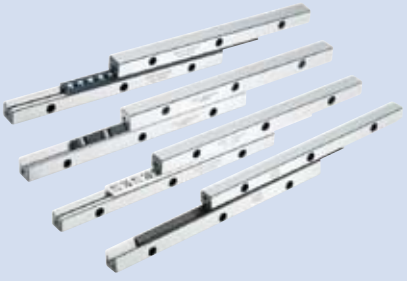

Have you ever wondered how a bird's nest, which appears to be so fragile, can withstand the heaviest rain and strong winds? Birds can weave even the smallest twigs with great precision to form the supporting structure of the nest for the protection of their eggs and new-born chicks from the weather.

This small miracle of nature has given SKF the inspiration to create solutions to satisfy a wide variety of requests for precision with micrometer accuracy products like precision rail guides, also available with a state-of-the art anti-creep system. And precision slides are high quality tools for linear motion which are, ideally suited for uses in a wide range of applications where close tolerances are demanded.

SKF products are created to build the future.

Precision rail guides

Modular range rail guides

The modular range consists of a matrix range of rail guide modules which enable an individual choice of combinations of rails and rolling element assemblies. Different requirements for the guides do not call for changes in the design or mechanical environment. Selection of the adequate rail guide is made depending on the mechanical conditions of the application.

These operating requirements are covered by six different models (**fig. 18**) that may be defined as rail guides with:

- cross roller cages for the standard LWR series
- ball cages for the LWRB series
- cross roller cages for the optimised LWRE series
- cross roller cages with anti cage-creep system (ACSM) for the LWRE series
- needle roller cages for the LWRM/LWRV series and
- slide liners as raceways for the LWRPM/LWRPV series.

Precision rail guides are suitable for applications with limited strokes requiring high stiffness and positioning accuracy.

The modular range series of rails makes it possible to select internal design and/or rolling elements to suit application requirements without changing the envelope dimensions of the rails.

The modular rail range, which is completely interchangeable, is shown in **table 17**. This range is suitable for applications with limited strokes requiring high stiffness and positioning accuracy.

Fig. 18



Table 17

Modular range: interchangeable rail programme	Basic load rating	Speed	Noise	Stiffness	Precision
Cross rollers LWR					
Cross rollers LWRE					
Needle rollers					
Slide liners					

Anti cage-creep system (ACSM)

The ACSM system prevents the cage-creep effect. It is available for any product from the LWRE range.

The non-slip effect is achieved by an involute toothed cogwheel attached to the cage which is inside the LWRE ACSM rails during operation, thus retaining the cage in its defined position. (**fig. 19**).

This system reliably prevents so-called cage-creep and is mainly used in applications characterised by high rates of acceleration and speeds of travel as well as eccentric loads.

Integration of the ACSM system does not change the mounting dimensions of the LWRE rail guides. This enables LWRE rail guides with ACSM to be used in existing applications without changing the adjacent construction and thus significantly increasing the availability of these machinery elements. Apart from the ACSM system, the former version of ACS is still available. In this version the cogwheel is made of polymer and the stroke length can be specified.

LWRE rail guides with ACS system can be produced in longer sizes.

For further information please consult the SKF catalogue «precision rail guides», publication number 4183 EN.

Fig. 19



Design of an LWRE rail guide with ACSM

N.B.:
In addition to this catalogue, all product brochures are available on **www.skf.com** *as PDF files.*

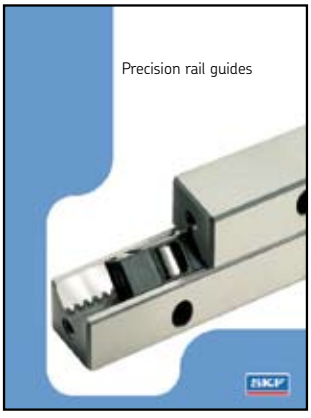

Publication nr. 4183 EN

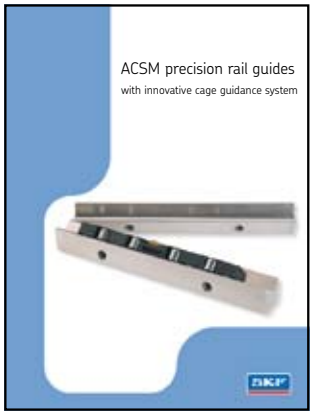

Publication nr. 6602 EN

Ordering key

LW				

Type

Designation type:

Rail guide (sizes: 3/6/9/12/15/18/24)	R
Rail guide (sizes: 1/2)	RB
Plastic ball-retaining cage (sizes: 1/2/3/6/9/12)	JK
Cross rollers in plastic cage (size: 3)	AK
Cross rollers in aluminium cage (sizes: 6/9/12)	AL
End stop for low load and horizontal mounting (sizes: 1/2/3/6/9/12/15/18/24)	ERA
Special attachment screw (sizes: 3/4/6/9/12/15/18/24)	GD
Rail guide (sizes: 3/4/6/9)	RE
Cross roller plastic cage (sizes: 3/4/6/9)	AKE
End stop for general use (sizes: 3/4/6/9/2211)	ERE
Special attachment screw (sizes: 3/4/6/9/2211)	GD
Rail guide for needle roller cage (sizes: 6/9)	RM
Rail guide for needle roller cage (sizes: 6/9)	RV
Needle rollers in aluminium cage (sizes: 6/9)	HW
Needle rollers in polymer cage (sizes: 6/9)	HV
End stop with plastic wiper for general use (sizes: 6/9)	EARM
End stop with plastic wiper for general use (sizes: 6/9)	EARV
Special attachment screw (sizes: 6/9)	GD
Rail guide (sizes: 3015/4020/5025/6030/7040/8050)	M
Rail guide (sizes: 3015/4020/5025/6030/7040/8050)	V
Needle rollers in aluminium cage (sizes: 10/15/20/25/30)	HW
Needle rollers in polymer cage (sizes: 10/15/20/25/30)	HV
End stop with wiper for general use (sizes: 3015/4020/5025/3060/7040/8050)	EAM
End stop with wiper for general use (sizes: 3015/4020/5025/3060/7040/8050)	DIN 84
Attachment screw (sizes: M3/M5/M6)	EAV

Size*:
Specific values are reported on designation type

Length rail guide (mm):

xxxx

Option:

For R	for size 3/6	KIT
	for size 3/4/6	KIT
For RE	anti cage-creep system ACSM	ACSM
	anti cage-creep system ACSM for size 3/6	ACSM-KIT
	anti cage-creep system ACS	ACS
	anti cage-creep system ACS for size 3/4/6	ACS-KIT

Example 1, rail guide:	LW	RE	6	350	ACSM
Example 2, cage:	LW	AKE	6	350	
Example 3, end stop:	LW	ERE	6	x24	
Example 4, screws:	LW	GD	6		

*

Sizes 3/4/6 = 3 digits for length of rail; example:	050
	100
	...
Size 9 = 4 digits for length of rail; example:	0300
	...
	1200
Size 3015 = 3 digits for length of rail; example:	3015100
	3015150
	...
Bigger sizes 4 digits for length of rail; example:	50250200
	...

N.B.:
For information about additional products and accessories, please contact SKF Customer Service.
- LWN / LW0 (sizes 2025-, 2535-, 3045- and 3555-) - LWML series - LWF / LWG series (sizes 412-, 612-, 624-, 1024- and 1434-)

LWR../LWRB..

LWR rail guides are well-proven, limited-travel linear guides used in numerous applications. They consist of two identical rails where cross roller cages or ball cages are inserted, depending on the application and size.

LWR rail guides with cross roller cages are robust linear bearings with high load-carrying capacity. Their special characteristics make them suitable for a large proportion of linear bearing arrangements with limited travel.

LWRB rail guides with ball cage can be used to advantage where loads are light and easy running is required.

They are available for sizes 1 and 2. Because of the large number of possible combinations, all components of LWR/LWRB rail guides must be ordered separately, for example:

4 rails LWR
2 cross roller cages LWAL
8 end stops LWERA.

LWR .. KIT

The KIT package for the modular range is a unique service provided only by SKF.

Rails

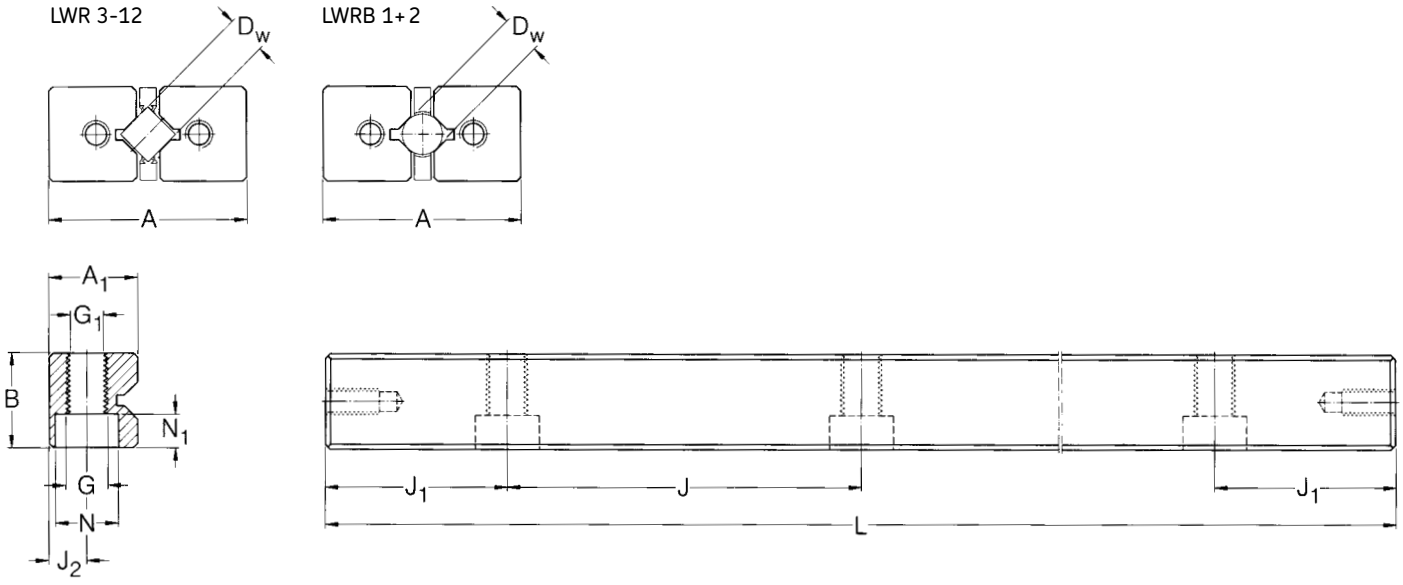

Ball and cross roller cages

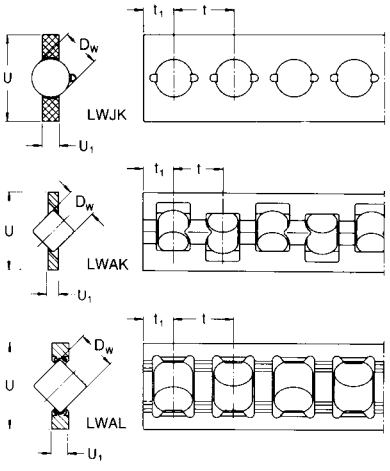

End stops

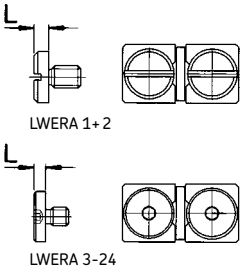

Special attachment screw

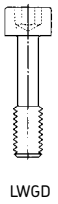

LWR 3/6 .. KIT

4 rail guides LWR
2 cross roller cages LWAL/LWAK
8 end stops LWERA

Designations	Load ratings* dynamic	static	Stroke	Rail designations	Cage designations
	C	C_0			
	N		mm		
LWR 3050 KIT	999	1 120	26	LWR 3050	LWAK 3×7
LWR 3075 KIT	1 422	1 760	36	LWR 3075	LWAK 3×11
LWR 3100 KIT	1 811	2 400	46	LWR 3100	LWAK 3×15
LWR 3125 KIT	2 088	2 880	66	LWR 3125	LWAK 3×18
LWR 3150 KIT	2 442	3 520	76	LWR 3150	LWAK 3×22
LWR 3175 KIT	2 781	4 160	86	LWR 3175	LWAK 3×26
LWR 3200 KIT	3 110	4 800	96	LWR 3200	LWAK 3×30

* Load ratings for 10 rolling elements
Including 8 end stops LWERA 3

See page 80 for drawing

Designations	Load ratings* dynamic	static	Stroke	Rail designations	Cage designations
	C	C_0			
	N		mm		
LWR 6100 KIT	4 915	5 440	50	LWR 6100	LWAL 6×8
LWR 6150 KIT	6 744	8 160	78	LWR 6150	LWAL 6×12
LWR 6200 KIT	8 441	10 880	106	LWR 6200	LWAL 6×16
LWR 6250 KIT	10 045	13 600	134	LWR 6250	LWAL 6×20
LWR 6300 KIT	11 955	17 000	144	LWR 6300	LWAL 6×25
LWR 6350 KIT	13 422	19 720	172	LWR 6350	LWAL 6×29
LWR 6400 KIT	14 846	22 440	200	LWR 6400	LWAL 6×33

* Load ratings for 10 rolling elements
Including 8 end stops LWERA 6

See page 80 for drawing

LWRB 1

Designations	Dimensions															Load ratings* dynamic	static
	A	B	L	L_1	J	J_1	G	G_1	N	N_1	A_1	D_W	U	U_1	t	C	C_0
	mm						–	mm								N	
Rails																	
LWRB 1020	8,5	4	20		10	5	M2	1,7	3	1,4	3,9						
LWRB 1030	8,5	4	30		10	5	M2	1,7	3	1,4	3,9						
LWRB 1040	8,5	4	40		10	5	M2	1,7	3	1,4	3,9						
LWRB 1050	8,5	4	50		10	5	M2	1,7	3	1,4	3,9						
LWRB 1060	8,5	4	60		10	5	M2	1,7	3	1,4	3,9						
Ball cage																	
LWJK 1,588												1,588	3,5	0,5	2,2	410	580
End stop																	
LWERA 1			1	–													

See page 80
for drawing

* Load ratings for 10 rolling elements

LWRB 2

Designations	Dimensions															Load ratings* dynamic	static
	A	B	L	L_1	J	J_1	G	G_1	N	N_1	A_1	D_W	U	U_1	t	C	C_0
	mm						–	mm								N	
Rails																	
LWRB 2030	12	6	30		15	7,5	M3	2,6	4,4	2	5,5						
LWRB 2045	12	6	45		15	7,5	M3	2,6	4,4	2	5,5						
LWRB 2060	12	6	60		15	7,5	M3	2,6	4,4	2	5,5						
LWRB 2075	12	6	75		15	7,5	M3	2,6	4,4	2	5,5						
LWRB 2090	12	6	90		15	7,5	M3	2,6	4,4	2	5,5						
LWRB 2105	12	6	105		15	7,5	M3	2,6	4,4	2	5,5						
LWRB 2120	12	6	120		15	7,5	M3	2,6	4,4	2	5,5						
Ball cage																	
LWJK 2												2	5	0,75	3	640	720
End stop																	
LWERA 2			1,5	–													

See page 80
for drawing

* Load ratings for 10 rolling elements

LWR 3

Designations	Dimensions															Load ratings* dynamic	static
	A	B	L	L_1	J	J_1	G	G_1	N	N_1	A_1	D_W	U	U_1	t	C	C_0
	mm						–	mm								N	
Rails																	
LWR 3050	18	8	50		25	12,5	M4	3,3	6	3,2	8,2						
LWR 3075	18	8	75		25	12,5	M4	3,3	6	3,2	8,2						
LWR 3100	18	8	100		25	12,5	M4	3,3	6	3,2	8,2						
LWR 3125	18	8	125		25	12,5	M4	3,3	6	3,2	8,2						
LWR 3150	18	8	150		25	12,5	M4	3,3	6	3,2	8,2						
LWR 3175	18	8	175		25	12,5	M4	3,3	6	3,2	8,2						
LWR 3200	18	8	200		25	12,5	M4	3,3	6	3,2	8,2						
LWR 3250	18	8	250		25	12,5	M4	3,3	6	3,2	8,2						
LWR 3300	18	8	300		25	12,5	M4	3,3	6	3,2	8,2						
Roller cage																	
LWAK 3												3	7,5	1	5	1 320	1 600
End stop																	
LWERA 3			2,5	–													
Special attachment screw																	
LWGD 3																	

See page 80 for drawing

* Load ratings for 10 rolling elements

LWR 6

Designations	Dimensions															Load ratings* dynamic	static
	A	B	L	L_1	J	J_1	G	G_1	N	N_1	A_1	D_W	U	U_1	t	C	C_0
	mm						–	mm								N	
Rails																	
LWR 6100	31	15	100		50	25	M6	5,2	9,5	5,2	14						
LWR 6150	31	15	150		50	25	M6	5,2	9,5	5,2	14						
LWR 6200	31	15	200		50	25	M6	5,2	9,5	5,2	14						
LWR 6250	31	15	250		50	25	M6	5,2	9,5	5,2	14						
LWR 6300	31	15	300		50	25	M6	5,2	9,5	5,2	14						
LWR 6350	31	15	350		50	25	M6	5,2	9,5	5,2	14						
LWR 6400	31	15	400		50	25	M6	5,2	9,5	5,2	14						
Roller cage																	
LWAL 6												6	14,8	2,7	9	5 850	6 800
End stop																	
LWERA 6			3	–													
Special attachment screw																	
LWGD 6																	

See page 80 for drawing

* Load ratings for 10 rolling elements

LWR 9

Designations	Dimensions											Load ratings*					
																dynamic	static
	A	B	L	L_1	J	J_1	G	G_1	N	N_1	A_1	D_W	U	U_1	t	C	C_0
	mm						–	mm								N	
Rails																	
LWR 90200	44	22	200		100	50	M8	6,8	11	6,2	20						
LWR 90300	44	22	300		100	50	M8	6,8	11	6,2	20						
LWR 90400	44	22	400		100	50	M8	6,8	11	6,2	20						
LWR 90500	44	22	500		100	50	M8	6,8	11	6,2	20						
LWR 90600	44	22	600		100	50	M8	6,8	11	6,2	20						
LWR 90700	44	22	700		100	50	M8	6,8	11	6,2	20						
Roller cage																	
LWAL 9												9	20	4	14	17 000	18 300
End stop																	
LWERA 9			4	–													
Special attachment screw																	
LWGD 9																	

See page 80
for drawing

* Load ratings for 10 rolling elements

LWRE ..

LWRE rail guides are a logical development of the proven LWR rail guides.

Within the modular range system, the LWRE rail guides offer an outstanding price/performance ratio.

Alongside the familiar characteristics of the LWR series, the new LWRE rail guides offer the advantages of a fivefold increase in load-carrying capacity and a doubling of the stiffness, achieved through optimised internal geometry in conjunction with larger roller diameters.

LWRE rail guide can be used in a given design space, maintaining the same load-carrying capacity as the LWR.

The mounting and attachment dimensions of the LWRE 3, 6, 9 rail guides conform to those of all SKF modular range rail guides presented in this catalogue.

LWRE rail guides are optimised with large rollers and improved internal geometry providing high load-carrying capacity and stiffness. They are available with ACSM. As a standard rail guides with ACSM are delivered without end face holes. LWRE rail guides of size 2 are equipped with ball cages.

Because of the large number of possible combinations, all components of LWRE rail guides must be ordered separately, for example:

4 rail guides LWRE
2 cross roller cages LWAKE
8 end stops LWERE

LWRE .. KIT

The KIT package for the modular range is a unique service provided only by SKF.

Rails

LWRE and LWRE ACS

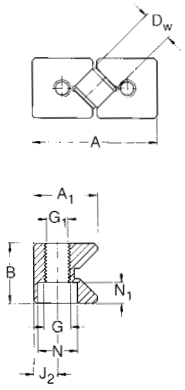

LWRE ACSM

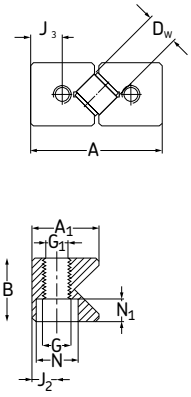

LWRB ACSM

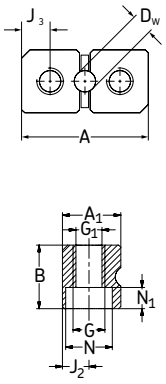

LWRE ACSM

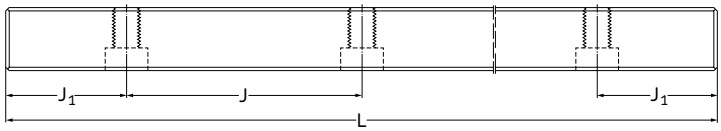

LWRE, LWRE ACSM

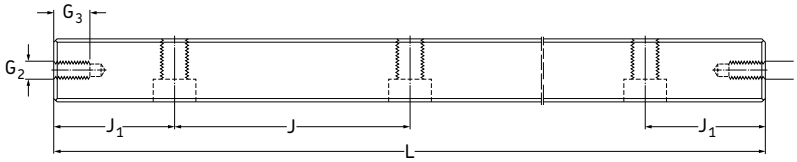

End stops

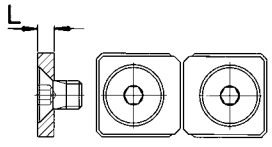

LWERE 3, 6, 9

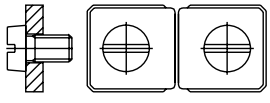

LWERE 4

Special attachment screw

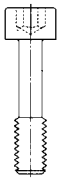

LWGD

Cross roller cages



LWAKE 3, 6, 9

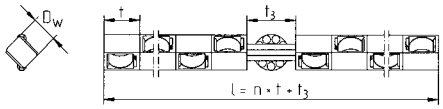

LWAKE 3, 6, 9 ACS

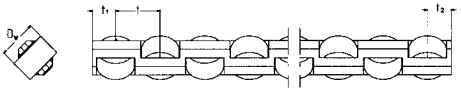

LWAKE 4

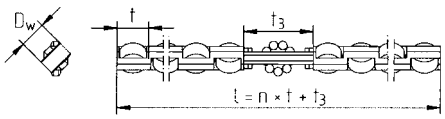

LWAKE 4 ACS

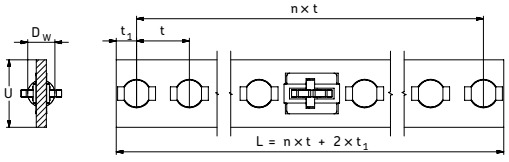

LWJK 2 ACSM

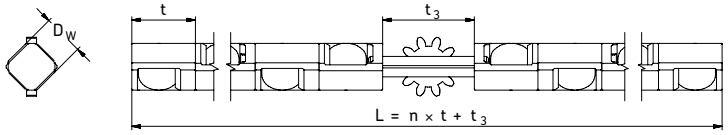

LWAKE 3, 6, 9 ACSM

LWRE 3 / 6 .. KIT

4 rail guides LWRE
2 cross roller LWAKE
8 end stops LWERE

Designations	Load ratings* dynamic	static	Stroke	Rail designations	Cage designations
	C	C_0			
	N		mm		
LWRE 3050 KIT	4 230	5 100	25	LWRE 3050	LWAKE 3×6
LWRE 3075 KIT	5 803	7 650	38	LWRE 3075	LWAKE 3×9
LWRE 3100 KIT	7 263	10 200	50	LWRE 3100	LWAKE 3×12
LWRE 3125 KIT	8 644	12 750	63	LWRE 3125	LWAKE 3×15
LWRE 3150 KIT	9 964	15 300	75	LWRE 3150	LWAKE 3×18
LWRE 3175 KIT	11 238	17 850	88	LWRE 3175	LWAKE 3×21
LWRE 3200 KIT	12 471	20 400	100	LWRE 3200	LWAKE 3×24

* Load ratings for 10 rolling elements
Including 8 end stops LWERE 3

See page 85 for drawing

Designations	Load ratings* dynamic	static	Stroke	Rail designations	Cage designations
	C	C_0			
	N		mm		
LWRE 6100 KIT	25 743	27 300	46	LWRE 6100	LWAKE 6×7
LWRE 6150 KIT	34 000	39 000	80	LWRE 6150	LWAKE 6×10
LWRE 6200 KIT	44 204	54 600	92	LWRE 6200	LWAKE 6×14
LWRE 6250 KIT	51 431	66 300	126	LWRE 6250	LWAKE 6×17
LWRE 6300 KIT	58 382	78 000	160	LWRE 6300	LWAKE 6×20
LWRE 6350 KIT	67 304	93 600	172	LWRE 6350	LWAKE 6×24
LWRE 6400 KIT	73 781	105 300	208	LWRE 6400	LWAKE 6×27

* Load ratings for 10 rolling elements
Including 8 end stops LWERE 6

See page 85 for drawing

LWRE 3/6.. ACS KIT

4 rail guides LWRE ACS
2 cross roller cages LWAKE
8 end stops LWERE

Designations	Load ratings* dynamic C	static C_0	Stroke	Rail designations	Cage designations
	N		mm		
LWRE 3050 ACS-KIT	4 230	5 100	20	LWRE 3050 ACS	LWAKE 3×6 ACS
LWRE 3075 ACS-KIT	5 294	6 800	30	LWRE 3075 ACS	LWAKE 3×6 ACS
LWRE 3100 ACS-KIT	6 300	8 500	45	LWRE 3100 ACS	LWAKE 3×10 ACS
LWRE 3125 ACS-KIT	7 731	11 050	62	LWRE 3125 ACS	LWAKE 3×13 ACS
LWRE 3150 ACS-KIT	9 090	13 600	79	LWRE 3150 ACS	LWAKE 3×16 ACS
LWRE 3175 ACS-KIT	9 964	15 300	94	LWRE 3175 ACS	LWAKE 3×18 ACS
LWRE 3200 ACS-KIT	11 653	18 700	100	LWRE 3200 ACS	LWAKE 3×22 ACS

* Load ratings for 10 rolling elements
Including 8 end stops LWERE 3

See page 85 for drawing

Designations	Load ratings* dynamic C	static C_0	Stroke	Rail designations	Cage designations
	N		mm		
LWRE 6100 ACS-KIT	22 826	23 400	37	LWRE 6100 ACS	LWAKE 6×6 ACS
LWRE 6150 ACS-KIT	31 318	35 100	71	LWRE 6150 ACS	LWAKE 6×9 ACS
LWRE 6200 ACS-KIT	39 196	46 800	105	LWRE 6200 ACS	LWAKE 6×12 ACS
LWRE 6250 ACS-KIT	49 056	62 400	117	LWRE 6250 ACS	LWAKE 6×16 ACS
LWRE 6300 ACS-KIT	56 093	74 100	151	LWRE 6300 ACS	LWAKE 6×19 ACS
LWRE 6350 ACS-KIT	65 107	89 700	163	LWRE 6350 ACS	LWAKE 6×23 ACS
LWRE 6400 ACS-KIT	71 640	101 400	197	LWRE 6400 ACS	LWAKE 6×26 ACS

* Load ratings for 10 rolling elements
Including 8 end stops LWERE 6

See page 85 for drawing

LWRE 3

Designations	Dimensions													Load ratings* dynamic	static
	A	B	L	L_1	J	J_1	G	G_1	N	N_1	A_1	D_W	t	C	C_0
	mm						–	mm						N	
Rails															
LWRE 3050	18	8	50		25	12,5	M4	3,3	6	3,2	8,7				
LWRE 3075	18	8	75		25	12,5	M4	3,3	6	3,2	8,7				
LWRE 3100	18	8	100		25	12,5	M4	3,3	6	3,2	8,7				
LWRE 3125	18	8	125		25	12,5	M4	3,3	6	3,2	8,7				
LWRE 3150	18	8	150		25	12,5	M4	3,3	6	3,2	8,7				
LWRE 3175	18	8	175		25	12,5	M4	3,3	6	3,2	8,7				
LWRE 3200	18	8	200		25	12,5	M4	3,3	6	3,2	8,7				
Cross roller cage															
LWAKE 3												4	6,25	6 300	8 500
End stop															
LWERE 3			2	–											
Special attachment screw															
LWGD 3															

See page 85
for drawing

* Load ratings for 10 rolling elements

LWRE 2211

Designations	Dimensions															Load ratings* dynamic	static
	A	B	L	L_1	J	J_1	G	G_1	N	N_1	A_1	D_W	t	t_1	t_2	C	C_0
	mm						–	mm								N	
Rails																	
LWRE 22110080	22	11	80		40	20	M5	4,3	7,5	4,1	11			2,65	3,6		
LWRE 22110120	22	11	120		40	20	M5	4,3	7,5	4,1	11			2,65	3,6		
LWRE 22110160	22	11	160		40	20	M5	4,3	7,5	4,1	11			2,65	3,6		
LWRE 22110200	22	11	200		40	20	M5	4,3	7,5	4,1	11			2,65	3,6		
LWRE 22110240	22	11	240		40	20	M5	4,3	7,5	4,1	11			2,65	3,6		
LWRE 22110280	22	11	280		40	20	M5	4,3	7,5	4,1	11			2,65	3,6		
LWRE 22110320	22	11	320		40	20	M5	4,3	7,5	4,1	11			2,65	3,6		
LWRE 22110360	22	11	360		40	20	M5	4,3	7,5	4,1	11			2,65	3,6		
LWRE 22110400	22	11	400		40	20	M5	4,3	7,5	4,1	11			2,65	3,6		
Cross roller cage																	
LWAKE 3												4	6,25			6 300	8 500
End stop																	
LWERE 3			2	–													

See page 85
for drawing

* Load ratings for 10 rolling elements

LWRE 6

Designations	Dimensions													Load ratings* dynamic	static
	A	B	L	L_1	J	J_1	G	G_1	N	N_1	A_1	D_W	t	C	C_0
	mm						–	mm						N	
Rails															
LWRE 6100	31	15	100		50	25	M6	5,2	9,5	5,2	15				
LWRE 6150	31	15	150		50	25	M6	5,2	9,5	5,2	15				
LWRE 6200	31	15	200		50	25	M6	5,2	9,5	5,2	15				
LWRE 6250	31	15	250		50	25	M6	5,2	9,5	5,2	15				
LWRE 6300	31	15	300		50	25	M6	5,2	9,5	5,2	15				
LWRE 6400	31	15	400		50	25	M6	5,2	9,5	5,2	15				
Cross roller cage															
LWAKE 6												8	11	34 000	39 000
End stop															
LWERE 6			3	–											
Special attachment screw															
LWGD 6															

See page 85 for drawing

* Load ratings for 10 rolling elements

LWRE 9

Designations	Dimensions													Load ratings* dynamic	static
	A	B	L	L_1	J	J_1	G	G_1	N	N_1	A_1	D_W	t	C	C_0
	mm						–	mm						N	
Rails															
LWRE 90200	44	22	200		100	50	M8	6,8	11	6,2	22				
LWRE 90300	44	22	300		100	50	M8	6,8	11	6,2	22				
LWRE 90400	44	22	400		100	50	M8	6,8	11	6,2	22				
LWRE 90500	44	22	500		100	50	M8	6,8	11	6,2	22				
LWRE 90600	44	22	600		100	50	M8	6,8	11	6,2	22				
LWRE 90700	44	22	700		100	50	M8	6,8	11	6,2	22				
Cross roller cage															
LWAKE 9												12	16	78 000	78 000
End stop															
LWERE 9			3	–											
Special attachment screw															
LWGD 9															

See page 85 for drawing

* Load ratings for 10 rolling elements

LWRB 2..ACSM and LWRE 3/6/9..ACSM

Designations	Dimensions			Attachment holes					End face holes					
	A	B	A_1	D_W	J	J_1	J_2	G	G_1	N	N_1	J_3	G_2	G_3
	mm							–	mm				–	mm
LWRB 2 ACSM	12	6	5,5	2	15	7,5	2,5	M3	2,55	4,4	2	2,7	M2,5	3
LWRE 3 ACSM	18	8	8,7	4	25	12,5	3,5	M4	3,3	6	3,2	4	M3	6
LWRE 6 ACSM	31	15	15,2	8	50	25	6	M6	5,2	9,5	5,2	6,75	M5	9
LWRE 9 ACSM	44	22	21,7	12	100	50	9	M8	6,8	10,5	6,2	9,75	M6	9

See page 85 for drawing

LWJK 2 and LWAKE 3/6/9 ACSM

Designations	Dimensions			Load ratings* dynamic	static	Suitable rail guide
	D_W	t	t_3	C	C_0	
	mm			N		
LWJK 2 ACSM	2	3,9	3,9	510	650	LWRB 2 ACSM
LWAKE 3 ACSM	4	6,25	9	5 040	8 160	LWRE 3 ACSM
LWAKE 6 ACSM	8	11	15,3	27 200	37 440	LWRE 6 ACSM
LWAKE 9 ACSM	12	16	22	62 400	74 880	LWRE 9 ACSM

* Load ratings for 10 rolling elements per row

See page 85 for drawing

LWRE 3 .. ACSM KIT

4 rail guides LWRE ACSM
2 cross roller LWAKE ACSM

Designations	Load ratings* dynamic	static	Stroke	Rail designations	Cage designations
	C	C_0		4 pieces	2 pieces
	N		mm		
LWRE 3050 ACSM-KIT	2 940	4 080	20	LWRE 3050 ACSM	LWAKE 3×5 ACSM
LWRE 3075 ACSM-KIT	3 380	4 900	30	LWRE 3075 ACSM	LWAKE 3×6 ACSM
LWRE 3100 ACSM-KIT	5 040	8 160	45	LWRE 3100 ACSM	LWAKE 3×10 ACSM
LWRE 3125 ACSM-KIT	6 180	10 610	62	LWRE 3125 ACSM	LWAKE 3×13 ACSM
LWRE 3150 ACSM-KIT	7 270	13 060	79	LWRE 3150 ACSM	LWAKE 3×16 ACSM
LWRE 3175 ACSM-KIT	7 970	14 690	94	LWRE 3175 ACSM	LWAKE 3×18 ACSM

* Load ratings for 10 rolling elements per row

See page 85 for drawing

LWRE 6 .. ACSM KIT

Designations	Load ratings* dynamic	static	Stroke	Rail designations	Cage designations
	C	C_0			
	N		mm		
LWRE 6100 ACSM-KIT	18 260	22 460	37	LWRE 6100 ACSM	LWAKE 6×6 ACSM
LWRE 6150 ACSM-KIT	25 050	33 700	71	LWRE 6150 ACSM	LWAKE 6×9 ACSM
LWRE 6200 ACSM-KIT	31 360	44 930	105	LWRE 6200 ACSM	LWAKE 6×12 ACSM
LWRE 6250 ACSM-KIT	39 240	59 900	117	LWRE 6250 ACSM	LWAKE 6×16 ACSM
LWRE 6300 ACSM-KIT	44 870	71 140	151	LWRE 6300 ACSM	LWAKE 6×19 ACSM
LWRE 6350 ACSM-KIT	52 090	86 110	163	LWRE 6350 ACSM	LWAKE 6×23 ACSM
LWRE 6400 ACSM-KIT	57 310	97 340	197	LWRE 6400 ACSM	LWAKE 6×26 ACSM

* Load ratings for 10 rolling elements per row

See page 85 for drawing

LWRE 3 ACS

Designations	Dimensions													Load ratings* dynamic	static
	A	B	L	L_1	J	J_1	G	G_1	N	N_1	A_1	D_W	t	t_3	C	C_0
	mm						–	mm							N	
Rails																
LWRE 3050 ACS	18	8	50		25	12,5	M4	3,3	6	3,2	8,7			9		
LWRE 3075 ACS	18	8	75		25	12,5	M4	3,3	6	3,2	8,7			9		
LWRE 3100 ACS	18	8	100		25	12,5	M4	3,3	6	3,2	8,7			9		
LWRE 3125 ACS	18	8	125		25	12,5	M4	3,3	6	3,2	8,7			9		
LWRE 3150 ACS	18	8	150		25	12,5	M4	3,3	6	3,2	8,7			9		
LWRE 3175 ACS	18	8	175		25	12,5	M4	3,3	6	3,2	8,7			9		
LWRE 3200 ACS	18	8	200		25	12,5	M4	3,3	6	3,2	8,7			9		
Cross roller cage																
LWAKE 3 ACS												4	6,25		6 300	8 500
End stop																
LWERE 3			2	–												
Special attachment screw																
LWGD 3																

See page 85
for drawing

* Load ratings for 10 rolling elements

LWRE 2211 ACS

Designations	Dimensions												Load ratings* dynamic	static
	A	B	L	J	J_1	G	G_1	N	N_1	A_1	D_W	t	t_3	C	C_0
	mm					–	mm							N	
Rails															
LWRE 22110080 ACS	22	11	80	40	20	M5	4,3	7,5	4,1	11			9		
LWRE 22110120 ACS	22	11	120	40	20	M5	4,3	7,5	4,1	11			9		
LWRE 22110160 ACS	22	11	160	40	20	M5	4,3	7,5	4,1	11			9		
LWRE 22110200 ACS	22	11	200	40	20	M5	4,3	7,5	4,1	11			9		
LWRE 22110240 ACS	22	11	240	40	20	M5	4,3	7,5	4,1	11			9		
LWRE 22110280 ACS	22	11	280	40	20	M5	4,3	7,5	4,1	11			9		
LWRE 22110320 ACS	22	11	320	40	20	M5	4,3	7,5	4,1	11			9		
LWRE 22110360 ACS	22	11	360	40	20	M5	4,3	7,5	4,1	11			9		
LWRE 22110400 ACS	22	11	400	40	20	M5	4,3	7,5	4,1	11			9		
Cross roller cage															
LWAKE 3 ACS											4	6,25		6 300	8 500
End stop															
LWERE 3															

See page 85
for drawing

* Load ratings for 10 rolling elements

LWRE 6 ACS

Designations	Dimensions														Load ratings* dynamic	static
	A	B	L	L_1	J	J_1	G	G_1	N	N_1	A_1	D_W	t	t_3	C	C_0
	mm						–	mm							N	
Rails																
LWRE 6100 ACS	31	15	100		50	25	M6	5,2	9,5	5,2	15			15,3		
LWRE 6150 ACS	31	15	150		50	25	M6	5,2	9,5	5,2	15			15,3		
LWRE 6200 ACS	31	15	200		50	25	M6	5,2	9,5	5,2	15			15,3		
LWRE 6250 ACS	31	15	250		50	25	M6	5,2	9,5	5,2	15			15,3		
LWRE 6300 ACS	31	15	300		50	25	M6	5,2	9,5	5,2	15			15,3		
LWRE 6400 ACS	31	15	400		50	25	M6	5,2	9,5	5,2	15			15,3		
Cross roller cage																
LWAKE 6 ACS												8	11		34 000	39 000
End stop																
LWERE 6			3	–												
Special attachment screw																
LWGD 6																

See page 85 for drawing

* Load ratings for 10 rolling elements

LWRE 9 ACS

Designations	Dimensions														Load ratings* dynamic	static
	A	B	L	L_1	J	J_1	G	G_1	N	N_1	A_1	D_W	t	t_3	C	C_0
	mm						–	mm							N	
Rails																
LWRE 90200 ACS	44	22	200		100	50	M8	6,8	11	6,2	22			22		
LWRE 90300 ACS	44	22	300		100	50	M8	6,8	11	6,2	22			22		
LWRE 90400 ACS	44	22	400		100	50	M8	6,8	11	6,2	22			22		
LWRE 90500 ACS	44	22	500		100	50	M8	6,8	11	6,2	22			22		
LWRE 90600 ACS	44	22	600		100	50	M8	6,8	11	6,2	22			22		
LWRE 90700 ACS	44	22	700		100	50	M8	6,8	11	6,2	22			22		
Cross roller cage																
LWAKE 9 ACS												12	16		78 000	78 000
End stop																
LWERE 9			3	–												
Special attachment screw																
LWGD 9																

See page 85 for drawing

* Load ratings for 10 rolling elements

LWRM .. / LWRV ..
Guiding systems with high load carrying capacity and maximum stiffness.

Needle roller cages for LWRM/LWRV rail guides
LWHW needle roller cages are made out of aluminium which provide retention of the needle rollers. They are available for size 6 and 9 units.

When ordering, the appropriate cage length in mm must be stated after the cage designation, e. g: LWHW 10 × 225.

End stops for LWRM/LWRV rail guides.

End stops serve to restrict the drift of the needle roller cage from the loaded zone.

LWEARM and LWEARV end stops are fitted with a plastic wiper with a sealing lip serving to reduce the risk of contamination of the raceways.

All end stops are supplied with the necessary attachment screws.

The mounting and attachment dimensions of the LWRM/LWRV rail guides conform to those of the other SKF modular range rail guides included in this catalogue.

Because of the large number of possible combinations, all components of LWRM/ LWRV rail guides must be ordered separately, for example:

2 rail guides LWRM
2 rail guides LWRV
2 needle roller assemblies LWHW
4 end stops LWEARM.

Rails

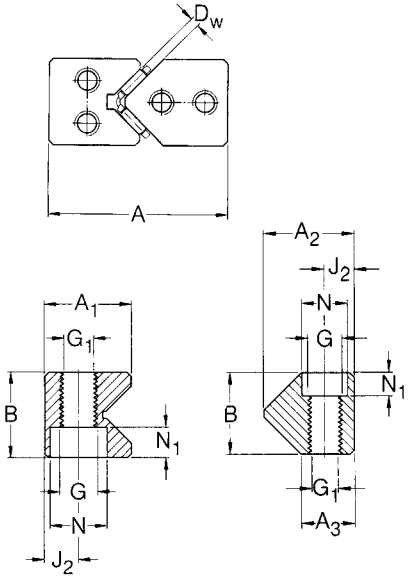

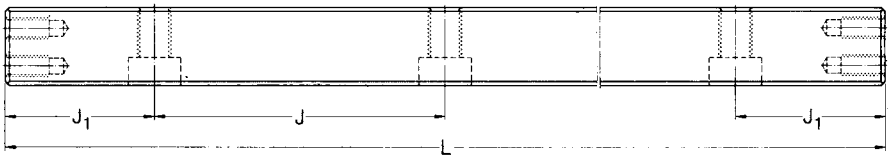

LWRM

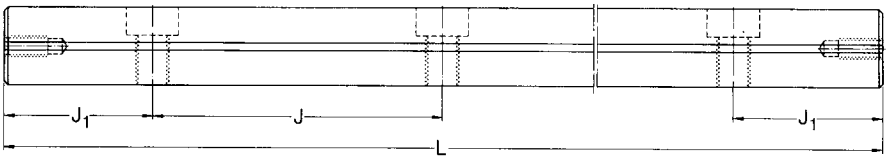

LWRV

End stops

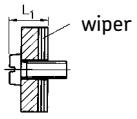

LWEARV
with wiper

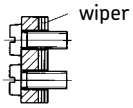

LWEARM
with wiper

Needle roller cage

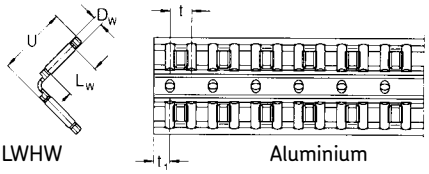

LWHW Aluminium

Special attachment screw

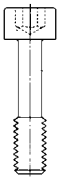

LWGD

LWRM 6 / LWRV 6

Designations	Dimensions															Load ratings* dynamic	static
	A	B	L	L_1	J	J_1	G	G_1	N	N_1	A_1	A_2	A_3	D_W	U	t	C	C_0
	mm						–	mm									N	
Rails																		
LWRM/LWRV 6100	31	15	100		50	25	M6	5,2	9,5	5,2	17	18	11					
LWRM/LWRV 6150	31	15	150		50	25	M6	5,2	9,5	5,2	17	18	11					
LWRM/LWRV 6200	31	15	200		50	25	M6	5,2	9,5	5,2	17	18	11					
LWRM/LWRV 6250	31	15	250		50	25	M6	5,2	9,5	5,2	17	18	11					
LWRM/LWRV 6300	31	15	300		50	25	M6	5,2	9,5	5,2	17	18	11					
LWRM/LWRV 6400	31	15	400		50	25	M6	5,2	9,5	5,2	17	18	11					
Needle roller cage																		
LWHW 10														2	10	3,75	10 400	25 500
End stops																		
LWEARM 6			–	6														
LWEARV 6			–	6														
Special attachment screw																		
LWGD 6																		

See page 94 for drawing

* For 10 needle rollers per row

LWRM 9 / LWRV 9

Designations	Dimensions															Load ratings* dynamic	static
	A	B	L	L_1	J	J_1	G	G_1	N	N_1	A_1	A_2	A_3	D_W	U	t	C	C_0
	mm						–	mm									N	
Rails																		
LWRM/LWRV 90200	44	22	200		100	50	M8	6,8	11	6,2	23,1	27	17					
LWRM/LWRV 90300	44	22	300		100	50	M8	6,8	11	6,2	23,1	27	17					
LWRM/LWRV 90400	44	22	400		100	50	M8	6,8	11	6,2	23,1	27	17					
LWRM/LWRV 90500	44	22	500		100	50	M8	6,8	11	6,2	23,1	27	17					
Needle roller cage																		
LWHW 15														2	15	4,5	16 300	45 000
End stops																		
LWEARM 9			–	8,3														
LWEARV 9			–	8,3														
Special attachment screw																		
LWGD 9																		

See page 94 for drawing

* For 10 needle rollers per row

LWM .. / LWV ..

These rail guides enable the design of linear guiding systems for heavy loads with maximum stiffness. The internal geometry is identical with that of the modular range rails of the LWRM/LWRV series. As the same needle roller cage is used, the load bearing characteristics are identical. The external dimensions of the LWM/LWV rail guides, however, differ slightly from those of the LWRM/LWRV modular range dimensions.

LWM/LWV rail guides are widely used in machine tools. LWM/LWV rail guides have as standard an attachment hole type 15, i.e. through hole with countersinking.

If attachment hole type 13 is ordered, corresponding threaded inserts are supplied along with the guide.

For new designs, LWRM/LWRV rail guides are recommended. These offer the advantage of being interchangeable with other rail guides of the modular range.

Needle roller cages for LWM/LWV rail guides

LWHW needle roller cages comprise an aluminium cage with needle rollers arranged at right angles to each other. The needle rollers are retained by the cage.

End stops for LWM/LWV rail guides

LWEAM and LWEAV end stops are fitted with a plastic wiper with sealing lip which serves to keep the track free from dirt.

All end pieces are supplied together with attachment screws.

Rails

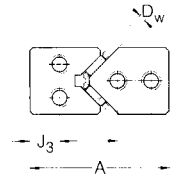

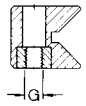

Hole type 13

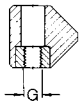

Hole type 13

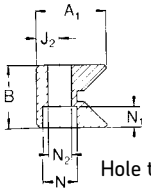

Hole type 15

LWM rail

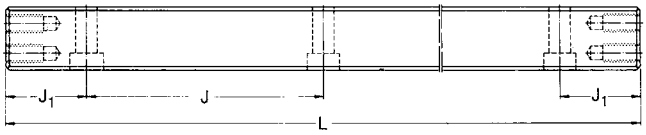

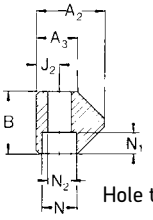

Hole type 15

LWV rail

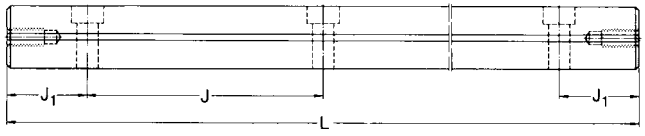

End stops

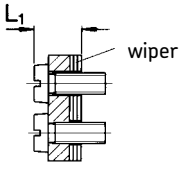

LWEAM with wiper

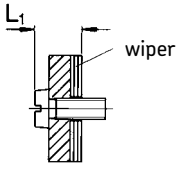

LWEAV with wiper

Needle roller cage

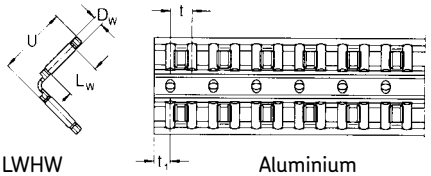

LWHW Aluminium

Special attachment screw

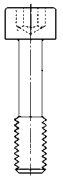

LWGD

LWM 3015 / LWV 3015

Designations	Dimensions															Load ratings* dynamic	static
	A	B	L	L_1	$J^{1)}$	$J_{1min}{}^{2)}$	G	N	N_1	N_2	A_1	A_2	A_3	D_W	U	t	C	C_0
	mm						–	mm									N	
Rails																		
LWM/LWV 3015100	30	15	100		40	15	M4	8,5	4,5	5,25	16	17,2	10,5					
LWM/LWV 3015150	30	15	150		40	15	M4	8,5	4,5	5,25	16	17,2	10,5					
LWM/LWV 3015200	30	15	200		40	15	M4	8,5	4,5	5,25	16	17,2	10,5					
LWM/LWV 3015300	30	15	300		40	15	M4	8,5	4,5	5,25	16	17,2	10,5					
LWM/LWV 3015400	30	15	400		40	15	M4	8,5	4,5	5,25	16	17,2	10,5					
Needle roller cage																		
LWHW10														2	10	3,75	10 400	25 500
End stops																		
LWEAM 3015			–	6														
LWEAV 3015			–	6														
Appropriate attachment screw																		
M4 DIN 84																		

* For 10 needle rollers per row
1) For lengths $L < J + 2 - J_{1min}$, J = 50 mm (except for LWM/LWV 3015)
2) J_1 depends upon the rail length and is of the same size at each end of the rail: $J_1 = (L - \Sigma J)/2$

See page 96 for drawing

LWM 4020 / LWV 4020

Designations	Dimensions															Load ratings* dynamic	static
	A	B	L	L_1	$J^{1)}$	$J_{1min}{}^{2)}$	G	N	N_1	N_2	A_1	A_2	A_3	D_W	U	t	C	C_0
	mm						–	mm									N	
Rails																		
LWM/LWV 4020100	40	20	100		80	15	M6	11,5	6,8	7,5	22,3	22	13,5					
LWM/LWV 4020150	40	20	150		80	15	M6	11,5	6,8	7,5	22,3	22	13,5					
LWM/LWV 4020200	40	20	200		80	15	M6	11,5	6,8	7,5	22,3	22	13,5					
LWM/LWV 4020300	40	20	300		80	15	M6	11,5	6,8	7,5	22,3	22	13,5					
LWM/LWV 4020400	40	20	400		80	15	M6	11,5	6,8	7,5	22,3	22	13,5					
Needle roller cage																		
LWHW 15														2	15	4,5	16 300	45 000
End stops																		
LWEAM 4020			–	8,3														
LWEAV 4020			–	8,3														
Appropriate attachment screw																		
M6 DIN 84																		

* For 10 needle rollers per row
1) For lengths $L < J + 2 - J_{1min}$, J = 50 mm (except for LWM/LWV 3015)
2) J_1 depends upon the rail length and is of the same size at each end of the rail: $J_1 = (L - \Sigma J)/2$

See page 96 for drawing

LWM 5025 / LWV 5025

Designations	Dimensions															Load ratings* dynamic	static
	A	B	L	L_1	$J^{1)}$	$J_{1min}{}^{2)}$	G	N	N_1	N_2	A_1	A_2	A_3	D_W	U	t	C	C_0
	mm						–	mm									N	
Rails																		
LWM/LWV 50250100	50	25	100		80	20	M6	11,5	6,8	7,5	28	28	17					
LWM/LWV 50250200	50	25	200		80	20	M6	11,5	6,8	7,5	28	28	17					
LWM/LWV 50250300	50	25	300		80	20	M6	11,5	6,8	7,5	28	28	17					
LWM/LWV 50250400	50	25	400		80	20	M6	11,5	6,8	7,5	28	28	17					
LWM/LWV 50250500	50	25	500		80	20	M6	11,5	6,8	7,5	28	28	17					
Needle roller cage																		
LWHW 15														2	15	4,5	16 300	45 000
End stops																		
LWEAM 5025			–	8,9														
LWEAV 5025			–	8,9														
Appropriate attachment screw																		
M6 DIN 84																		

* For 10 needle rollers per row
[1] For lengths L < J + 2 – J_{1min}, J = 50 mm (except for LWM/LWV 3015)
[2] J_1 depends upon the rail length and is of the same size at each end of the rail: $J_1 = (L - \Sigma J)/2$

See page 96
for drawing

LWM 6035 / LWV 6035

Designations	Dimensions															Load ratings* dynamic	static
	A	B	L	L_1	$J^{1)}$	$J_{1min}{}^{2)}$	G	N	N_1	N_2	A_1	A_2	A_3	D_W	U	t	C	C_0
	mm						–	mm									N	
Rails																		
LWM/LWV 60350200	60	35	200		100	20	M8	15	9	10	36	36	20					
LWM/LWV 60350300	60	35	300		100	20	M8	15	9	10	36	36	20					
LWM/LWV 60350400	60	35	400		100	20	M8	15	9	10	36	36	20					
LWM/LWV 60350500	60	35	500		100	20	M8	15	9	10	36	36	20					
LWM/LWV 60350600	60	35	600		100	20	M8	15	9	10	36	36	20					
LWM/LWV 60350700	60	35	700		100	20	M8	15	9	10	36	36	20					
LWM/LWV 60350800	60	35	800		100	20	M8	15	9	10	36	36	20					
LWM/LWV 60350900	60	35	900		100	20	M8	15	9	10	36	36	20					
LWM/LWV 60351000	60	35	1 000		100	20	M8	15	9	10	36	36	20					
Needle roller cage																		
LWHW 20														2,5	20	5,5	32 000	88 000
End stops																		
LWEAM 6035			–	8,9														
LWEAV 6035			–	8,9														
Appropriate attachment screw																		
M8 DIN 84																		

* For 10 needle rollers per row
[1] For lengths L < J + 2 – J_{1min}, J = 50 mm (except for LWM/LWV 3015)
[2] J_1 depends upon the rail length and is of the same size at each end of the rail: $J_1 = (L - \Sigma J)/2$

See page 96
for drawing

LWM 7040 / LWV 7040

Designations	Dimensions															Load ratings* dynamic	static
	A	B	L	L_1	$J^{1)}$	$J_{1min}^{2)}$	G	N	N_1	N_2	A_1	A_2	A_3	D_W	U	t	C	C_0
	mm						–	mm									N	
Rails																		
LWM/LWV 70400200	70	40	200		100	20	M10	18,5	11	12,5	40	42	24					
LWM/LWV 70400300	70	40	300		100	20	M10	18,5	11	12,5	40	42	24					
LWM/LWV 70400400	70	40	400		100	20	M10	18,5	11	12,5	40	42	24					
LWM/LWV 70400500	70	40	500		100	20	M10	18,5	11	12,5	40	42	24					
LWM/LWV 70400600	70	40	600		100	20	M10	18,5	11	12,5	40	42	24					
LWM/LWV 70400700	70	40	700		100	20	M10	18,5	11	12,5	40	42	24					
LWM/LWV 70400800	70	40	800		100	20	M10	18,5	11	12,5	40	42	24					
LWM/LWV 70400900	70	40	900		100	20	M10	18,5	11	12,5	40	42	24					
LWM/LWV 70401000	70	40	1 000		100	20	M10	18,5	11	12,5	40	42	24					
Needle roller cage																		
LWHW 25														3	25	6	52 000	143 000
End stops																		
LWEAM 7040			–	8,9														
LWEAV 7040			–	8,9														
Appropriate attachment screw																		
M10 DIN 84																		

* For 10 needle rollers per row
[1] For lengths $L < J + 2 - J_{1min}$, J = 50 mm (except for LWM/LWV 3015)
[2] J_1 depends upon the rail length and is of the same size at each end of the rail: $J_1 = (L - \Sigma J)/2$

See page 96 for drawing

LWM 8050 / LWV 8050

Designations	Dimensions															Load ratings* dynamic	static
	A	B	L	L_1	$J^{1)}$	$J_{1min}^{2)}$	G	N	N_1	N_2	A_1	A_2	A_3	D_W	U	t	C	C_0
	mm						–	mm									N	
Rails																		
LWM/LWV 80500200	80	50	200		100	20	M12	20	13	14	45	48,5	26					
LWM/LWV 80500300	80	50	300		100	20	M12	20	13	14	45	48,5	26					
LWM/LWV 80500400	80	50	400		100	20	M12	20	13	14	45	48,5	26					
LWM/LWV 80500500	80	50	500		100	20	M12	20	13	14	45	48,5	26					
LWM/LWV 80500600	80	50	600		100	20	M12	20	13	14	45	48,5	26					
LWM/LWV 80500700	80	50	700		100	20	M12	20	13	14	45	48,5	26					
LWM/LWV 80500800	80	50	800		100	20	M12	20	13	14	45	48,5	26					
LWM/LWV 80500900	80	50	900		100	20	M12	20	13	14	45	48,5	26					
LWM/LWV 80501000	80	50	1 000		100	20	M12	20	13	14	45	48,5	26					
Needle roller cage																		
LWHW 30														3,5	30	7	76 500	212 000
End stops																		
LWEAM 8050			–	8,9														
LWEAV 8050			–	8,9														
Appropriate attachment screw																		
M12 DIN 84																		

* For 10 needle rollers per row
[1] For lengths $L < J + 2 - J_{1min}$, J = 50 mm (except for LWM/LWV 3015)
[2] J_1 depends upon the rail length and is of the same size at each end of the rail: $J_1 = (L - \Sigma J)/2$

See page 96 for drawing

LWRPM ../LWRPV ..

LWRPM/LWRPV rail guides are linear guides for limited travel, fitted with Turcite-B® [1] slide liners. Based on PTFE, this material is self-lubricating and offers excellent sliding properties.

The slide liners are bonded to the nonhardened LWRPM rail and subsequently ground to size. The LWRPV rail is hardened and ground. In order to avoid damage to the slide surface of the LWRPM rail, the leading edges of the LWRPV rails are slightly rounded. Otherwise, the dimensions of these rails are the same as those of the LWRV series.

LWRPM/LWRPV rail guides should be used where rail guides with rolling element assemblies are unsuitable due to external influences. Such applications include those subjected to high transverse acceleration that may cause indentation of the rolling elements in the raceways, or where extremely short strokes are required. The unfavourable tribological conditions produced by such operation would give rise to race-way pitting in a rolling element rail guide.

The mounting and attachment dimensions of the LWRPM/LWRPV rail guides conform to those of all the SKF Modular Range rail guides included in this catalogue. LWRPM/LWRPV rail guides are characterised by:

- stick-slip-free operation
- smooth running
- good emergency running properties
- low wear and high reliability
- insensitivity to contamination
- excellent vibration damping properties

When ordering, the individual components of the rail guides must be specified separately, for example:

2 rails LWRPM 6300
2 rails LWRPV 6300

LWRPM rail guides are provided with the slide liners already bonded to the raceways. Due to their design rail guides of these series do not require the use of end stops. Seperate ordering of the slide liners and end stops is not required.

[1] Turcite-B® is a registered trademark of Busak & Shamban GmbH

Rails

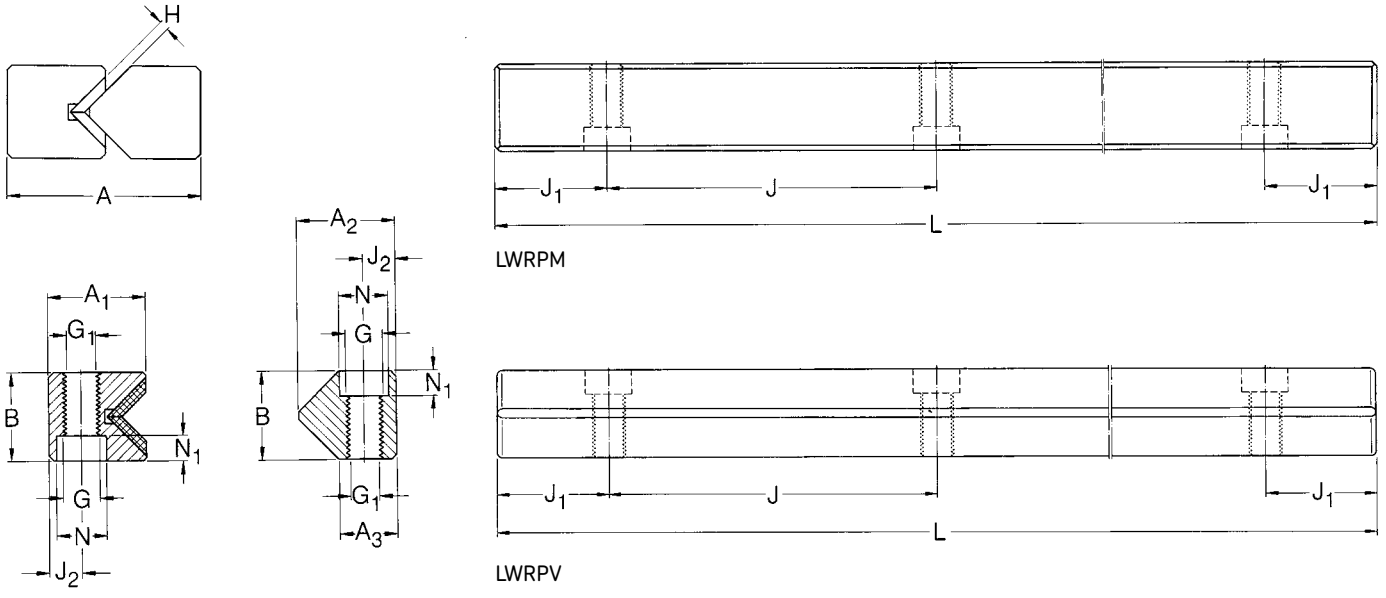

LWRPM 3/6/9

Designations	Dimensions												Load ratings* dynamic
	A	B	A_1	A_2	A_3	J	J_1	J_2	G	G_3	N	N_1	C
	mm								–	mm			N
Rails													
LWRPM 3	18	8	9,5	–	–	25	12,5	3,5	M4	3,3	6	3,2	300/100 mm
LWRPM 6	31	15	16,6	–	–	50	25	6	M6	5,2	9,5	5,2	700/100 mm
LWRPM 9	44	22	23,1	–	–	100	50	9	M8	6,8	10,5	6,2	1 200/100 mm

See page 100 for drawing

* For a surface loading of approximately 1 N/mm^2 (momentary loads of up to 6 N/mm^2 are permissible).

LWRPV 3/6/9

Designations	Dimensions												Load ratings* dynamic
	A	B	A_1	A_2	A_3	J	J_1	J_2	G	G_3	N	N_1	C
	mm								–	mm			N
Rails													
LWRPV 3	18	8	–	9,6	6,45	25	12,5	3,5	M4	3,3	6	3,2	–
LWRPV 6	31	15	–	17,8	10,8	50	25	6	M6	5,2	9,5	5,2	–
LWRPV 9	44	22	–	26,9	16,6	100	50	9	M8	6,8	10,5	6,2	–

See page 100 for drawing

* For a surface loading of approximately 1 N/mm^2 (momentary loads of up to 6 N/mm^2 are permissible).

Applications

In response to industry's ultimate need to produce more with less, SKF has combined its knowledge and experience with the latest technology to develop solutions for your specific conditions. Whether your goal is to design equipment that provides more customer value, or to increase overall profitability, with SKF experience and expertise, you're likely to find a real solution.

Linear motor table

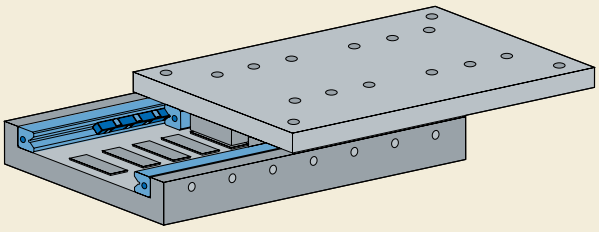

Components application
a) Precision rail guides

Gantry systems

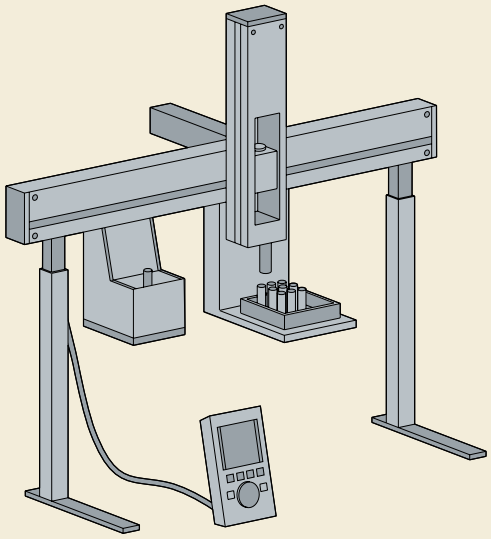

Components application
a) Precision rail guides

Machine tool

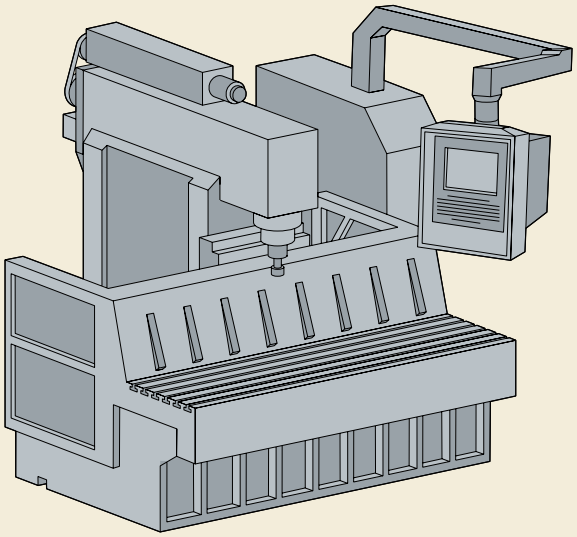

Components application
a) Precision rail guides

Stone/glass cutting

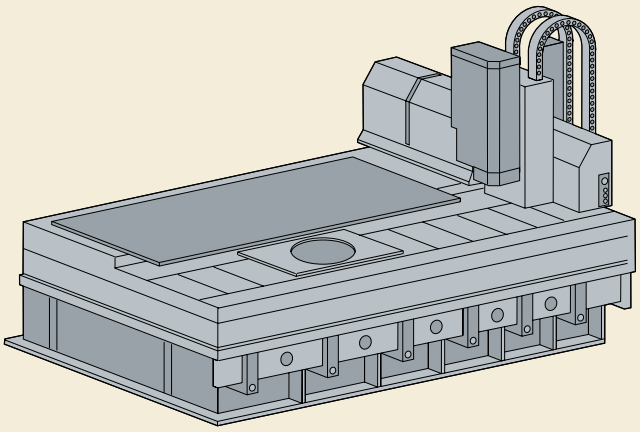

Components application
a) Precision rail guides

Notes

Some things are made to withstand the test of time



The thread of a cobweb is proportionally more resistant than any material ever invented by man – even a steel cable. Here we see just one of the wonders of nature which have inspired SKF to develop products that will last for many years to come.

Screws, guidance systems and many other components bearing the name of SKF are made from stainless steel and are designed to withstand a corrosive environment, at the same time providing the highest quality of performance with long-term reliability for all your applications.

With SKF, technology lasts.

Driving systems

Ball and roller screw

SKF ball & roller screw assemblies are high-quality products, suitable for a wide range of applications where precision driving systems are needed.

The high efficiency screw allows loads to be displaced by transforming rotary action into linear motion. The high efficiency screw has rolling elements, balls or rollers, between the nut and the screw shaft.

In all types of ball screws (**figs. 1, 2** and **3**), the load is transmitted from the screw shaft to the nut through each ball: several recirculating systems are available. To improve positioning accuracy, backlash can be reduced or eliminated.

Roller screws (**fig. 4**) are available in two non-competing designs which cover requirements beyond ball screw limitations.

Load transfer from the nut to the screw shaft through a number of threaded or grooved rollers results in a large number of strong contact points.

Operating precision (**table 1**)
Comparison of the different positioning components and systems.

Fig. 1



Fig. 2



Fig. 3



Fig. 4



Table 1

Operating precision (µm)	Guiding systems	Driving systems	Actuation systems	Positioning systems
0,1-1	Precision rail guides	Roller screws		
1-10	Linear ball bearings, Profile rail guides, Standard slides	Ball screws, Linear motors		Standard drives or linear motors with all guiding systems
10-100			Electro-mechanical actuators	
100-1 000				

How to make your choose

In our wide range of products, you are sure to find the one that exactly fits your requirements:

- The miniature ball screws (**fig. 5**), either with ball recirculation by integrated tube or with inserts, are very compact. Backdriving makes them highly efficient.
- The large ball screws (**fig. 6**) enable you to select the right level of requirements: simple transport screws, very fast screws with long lead, or preloaded screws for more precision.
- Ground ball screws (**fig. 7**) for more rigidity and precision
- Roller screws (**fig. 8**) which are far beyond the limits of any ball screws for heavy loads, ultimate precision and rigidity, high speed and acceleration and use in very difficult environments.

Table 2 will assist you in your selection.

Fig. 5



Fig. 6

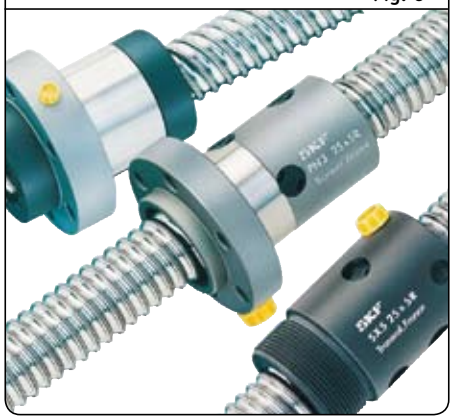

Fig. 7



Fig. 8

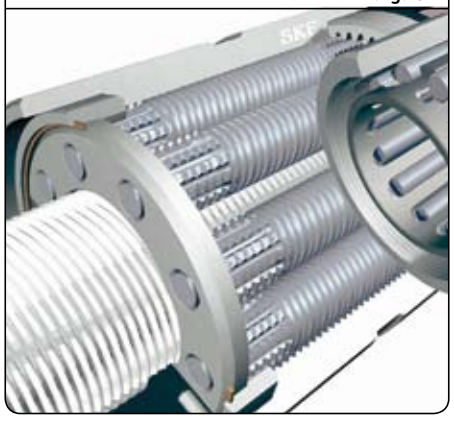

Table 2

Type	Details	Basic dynamic load rating	Precision Ep (µ) on 300 mm	High duty cycles	Adverse environment (Spec. steel, pollution)
	**SD/BD/SH** Diameter ∅ 6 to 16 mm	Up to 7,6 kN	G9 (130 µ) to G5 (23 µ)		Good
	**SX/BX, SN/BN/PN** **SND/BND/PND** **SL/BL, SLD/BLD** Din standard ∅ 16 to 63 mm	Up to 95 kN	G9 (130 µ) to G5 (23 µ)		Satisfactory
	**PGFE, PGFJ,** **PGFM, SGFE** ∅ 16 to 125 mm	Up to 680 kN	G5 (23 µ) to G1 (6 µ)		Satisfactory
	**SRC, SRF,** **TRK/PRK, SVC, PVK** ∅ 8 to 210 mm	Up to 2 235 kN	G5 (23 µ) to G1 (6 µ)		Exceptional

Ball screws

Rolled ball screws

SKF ball screw assemblies are high-quality products, suitable for a wide range of applications where precision driving systems are needed.

SKF rolled thread ball screws are available in four designs to cover most requirements.

Complete assemblies

A complete range of accessories is available and can be delivered completely assembled. Just ask when ordering (**fig. 9**).

Fig. 9



Service range

General rules

Delivery time	Delivery time from a couple of days to max. two weeks is possible for orders meeting the following conditions:
Quantity	• Max. 5 pcs. for types SX/BX - SN/BN/PN - SL/BL • Max. 15 pcs. for types SH - SD/BD
Materials	Both shafts and nuts should be made of standard steel (refer to our catalogue 4141). Neither stainless steel nor special treatments are accepted through this quick channel.
Capabilities	• Standard nuts, including DIN nuts • Screw shafts as per customer drawing (splines & special treatments excepted) • Preload by oversized balls accepted for BX - BN/BND - BL/BLD. Preload not accepted for screws with diameters equal to or less than 16 mm (BH- BD - BN - BND) • Rotating nut, SLT/BLT is excluded

Diameters	Leads	Nut types	Precision classes	Accessories
From 6 to 63 mm	From 2 to 50 mm	Cylindrical and flanged with axial play, backlash elimination and/or nuts preload, SKF & DIN standards	G5 - G7 - G9	For screw shafts and nuts

N.B.:
In addition to this catalogue, all product brochures are available on **www.skf.com** *as PDF files.*

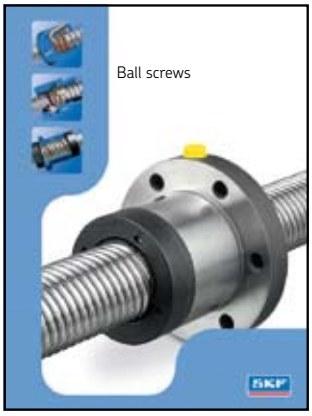

Publication nr. 4141 EN

Ordering key

[ ] [ ] [ ] [ ] / [ ] [ ] [ ] - [ ] [ ] [ ] / [ ] [ ]

Nut type:

Miniature screw, axial play, internal recirculation nut	SD
Miniature screw, backlash elimination by oversize balls	BD
Miniature screw, axial play, recirculation by integrated tube	SH
Universal screw, axial play	SX
Universal screw, backlash elimination by oversize balls	BX
Precision screw, axial play	SN
Precision screw, backlash elimination by oversize balls	BN
Precision screw, axial play, DIN nut	SND
Precision screw, backlash elimination by oversize balls, DIN nut	BND
Precision screw, with optimal rigidity	PN
Precision screw, with optimal rigidity, DIN nut	PND
Long lead screw, axial play	SL
Long lead screw, axial play, DIN nut	SLD
Long lead screw, backlash elimination by oversize balls	BL
Long lead screw, backlash elimination by oversize balls, DIN nut	BLD
Rotating nut with axial play	SLT
Rotating nut with backlash elimination	TLT

Nominal diameter × lead (mm)

Hand:

Right	R
Left (on request)	L

Threaded length / Total length (mm)

Lead precision:

G9, G7, G5

Nut orientation:
Threaded side or flange of nut towards shorter (S) or longer (L) machined end of shaft
In case of same end machining (–)

Machined end combination:
See page 118-121

Required lengths for AA - SA (both sides):
See page 118

/

Wipers:

With wipers	WPR
Without wipers	NOWPR
Safety ring (for SH - SD only)	RING

Example: PND | 32×5 | R | 330 / 445 | G7 | L - SA | +K | 25 / 20 | NOWPR

SD/BD - Miniature ball screws

Ball recirculation in composite inserts, threaded end for easy mounting.
SD: axial play
BD: backlash elimination by oversize balls

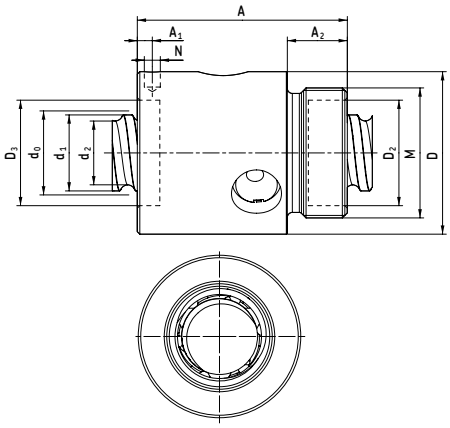

Designations	Dimensions									Basic load ratings	
	Lead									dynamic	static
	d_0	P_h	d_1	d_2	L Max	A	A_2	D h10	M g6	C	C_0
	mm									kN	
SD/BD 8×2,5R	8	2,5	7,6	6,3	1 000	23,5	7,5	17,5	M15×1	2,2	2,6
SD/BD 10×2R	10	2	9,5	8,3	1 000	22	7,5	19,5	M17×1	2,5	3,5
SD/BD 10×4R	10	4	8,9	7,4	1 000	22	8	21	M18×1	4,5	5,4
SD/BD 12×2R	12	2	11,2	9,8	2 000	20	8	20	M18×1	2,9	4,6
SD/BD 12×4R	12	4	11,3	9,4	2 000	34	10	25,5	M20×1	5	6,5
SD/BD 12×5R	12	5	11,8	9,3	2 000	36	10	23	M20×1	4,2	5,3
SD/BD 14×4R	14	4	13,7	11,9	2 000	30	8	27	M22×1,5	6	9
SD/BD 16×2R	16	2	15,5	14,3	2 000	27	12	29,5	M25×1,5	3,3	6,2
SD/BD 16×5R	16	5	15,2	12,7	2 000	42	12	32,5	M26×1,5	7,6	10,5
SD/BD 16×10R	16	10	15,2	12,6	2 000	46	12	32,5	M26×1,5	10,7	17

SH - Miniature ball screws

Ball recirculation in tube inside the nut, threaded end for easy mounting

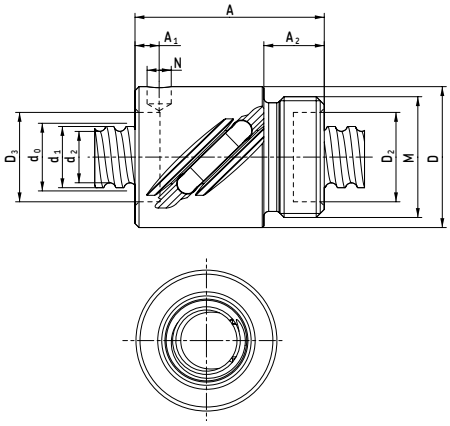

Designations	Dimensions									Basic load ratings	
	Lead									dynamic	static
	d_0	P_h	d_1	d_2	L Max	A	A_2	D h10	M g6	C	C_0
	mm									kN	
SH 6×2R	6	2	6	4,7	1 000	20	7,5	16,5	M14×1	1,2	1,5
SH 10×3R	10	3	9,9	7,9	1 000	29	9	21	M18×1	2,3	3,5
SH 12,7×12,7R	12,7	12,7	13	10,2	2 000	50	12	29,5	M25×1,5	5,3	9

Symbols, see **page 157**

SX/BX - Universal ball screws

Ball recirculation in composite inserts, threaded end for easy mounting, accessories see **pages 111 and 122–123**.
Steel inserts optional.
SX: axial play
BX: backlash elimination by oversize balls

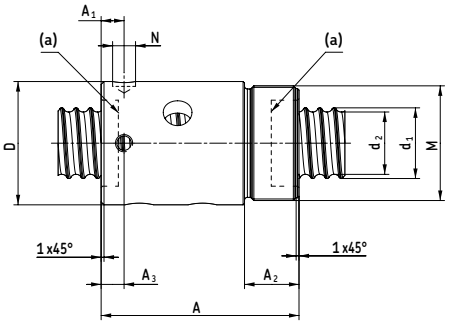

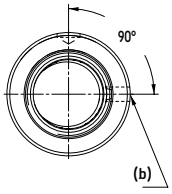

Legend:
(a) = wiper
(b) = lubrication

Designations	Dimensions									Basic load ratings	
	Lead									dynamic	static
	d_0	P_h	d_1	d_2	L Max	A	A_2	D h10	M g6	C	C_0
	mm									kN	
SX/BX 20×5R	20	5	19,4	16,7	4 700	54	14	38	M35×1,5	14,5	24,4
SX/BX 25×5R	25	5	24,6	21,7	4 700	69	19	43	M40×1,5	19,4	37,8
SX/BX 25×10R	25	10	24,6	20,5	4 700	87	19	43	M40×1,5	25,8	43,7
SX/BX 32×5R	32	5	31,6	28,7	5 700	64	19	52	M48×1,5	22,1	50,5
SX/BX 32×10R	32	10	32	27,8	5 700	95	19	54	M48×1,5	28,9	55,7
SX/BX 40×5R	40	5	39,6	36,7	5 700	65	19	60	M56×1,5	24,1	63,2
SX/BX 40×10R	40	10	39,4	34	5 700	105	24	65	M60×2	63,6	127,1
SX/BX 50×10R	50	10	49,7	44	5 700	135	29	78	M72×2	81,9	189,1
SX/BX 63×10R	63	10	62,8	57	5 700	135	29	93	M85×2	91,7	243,5

Symbols, see **page 157**

FHRF

Round flanges (for SX nuts only)

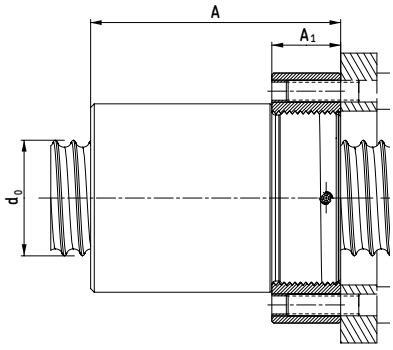

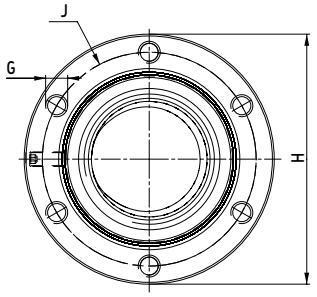

Designations	Dimensions					
	Lead					
	d_0	P_h	A h14	A_1 h14	J JS12	H h12
	mm					
FHRF 20	20	5	55	15	44	52
FHRF 25	25	5	70	20	50	60
FHRF25	25	10	88	20	50	60
FHRF 32	32	5	70	20	59	69
FHRF 32	32	10	96	20	59	69
FHRF 40×5	40	5	70	20	69	82
FHRF 40×10	40	10	111	25	76	92
FHRF 50	50	10	136	30	91	110
FHRF 63	63	10	136	30	106	125

FHSF

Square flanges (for SX nuts only)

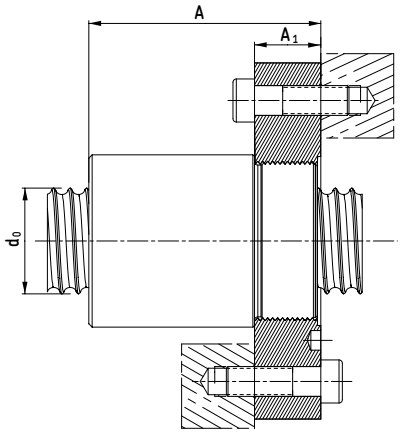

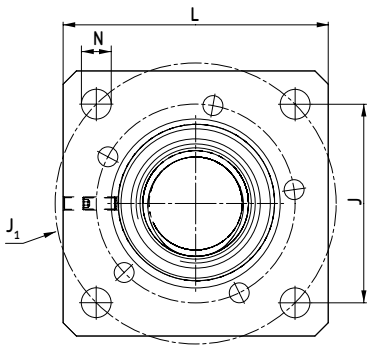

Designations	Dimensions					
	Lead					
	d_0	P_h	A h14	A_1 h14	J JS12	H h12
	mm					
FHSF 20	20	5	55	15	45	60
FHSF 25	25	5	70	20	52	70
FHSF 25	25	10	88	20	52	70
FHSF 32	32	5	70	20	60	80
FHSF 32	32	10	96	20	60	80
FHSF 40×5	40	5	70	20	70	90
FHSF 40×10	40	10	111	25	78	100
FHSF 50	50	10	136	30	94	120
FHSF 63	63	10	136	30	104	130

Symbols, see **page 157**

SN/BN - Precision ball screws

Ball recirculation in composite inserts. Steel insert optional.
SN: axial play
BN: backlash elimination by oversize balls.

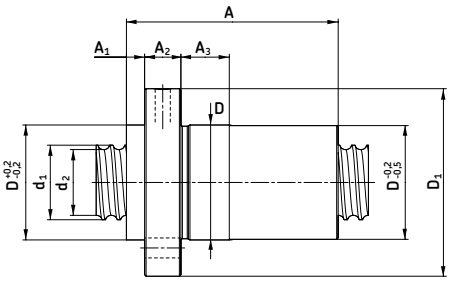

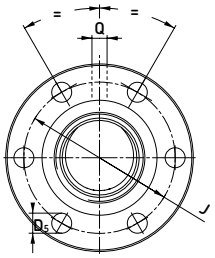

Designations	Dimensions											Basic load ratings	
	Lead											dynamic	static
	d_0	P_h	d_1	d_2	L Max	A	A_2	D g9	D_1	J JS12	G 6x	C_a	C_{oa}
	mm											kN	
SN/BN 16×5R	16	5	15,2	12,7	2 000	43,5	10	28	48	38	M5	8,1	12,4
SN/BN 20×5R	20	5	19,4	16,7	4 700	46,5	12	33	57	45	M6	11,7	18,3
SN/BN 25×5R	25	5	24,6	21,7	4 700	46,5	12	38	62	50	M6	13	22,7
SN/BN 25×10R	25	10	24,6	20,5	4 700	75	10	43	67	55	M6	25,8	43,7
SN/BN 32×5R	32	5	31,6	28,7	5 700	51,5	12	45	70	58	M6	19,1	40,4
SN/BN 32×10R	32	10	32	27,8	5 700	79	16	54	87	70	M8	22,6	41,8
SN/BN 40×5R	40	5	39,6	36,7	5 700	58,5	14	53	80	68	M6	25,4	63,2
SN/BN 40×10R	40	10	39,4	34	5 700	93	16	63	95	78	M8	63,6	127,1
SN/BN 50×10R	50	10	49,7	44	5 700	99	16	72	110	90	M10	70,6	157,6
SN/BN 63×10R	63	10	62,8	57	5 700	103	20	85	125	105	M10	78,4	202,9

SND/BND - Precision ball screws

Ball recirculation in composite inserts, Din standard. Steel insert optional.
SND: axial play
BND: backlash elimination by oversize balls.

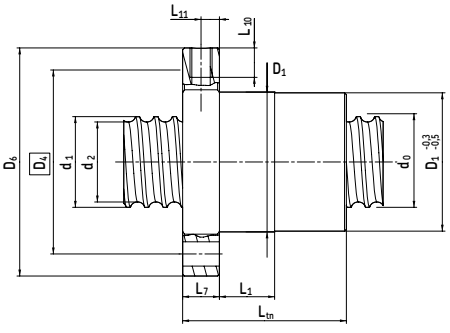

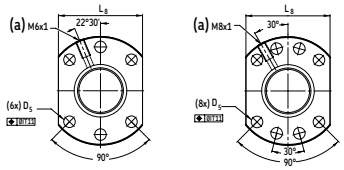

Design 1 Design 2

Designations	Dimensions							Basic load ratings		Design
	Lead							dynamic	static	
	d_0	P_h	d_1	d_2	L Max	D_1 g6	D_4	C_a	C_{oa}	
	mm							kN		
SND/BND 16×5R	16	5	15,2	12,7	2 000	28	38	8,1	12,4	1
SND/BND 16×10R	16	10	15,2	12,6	2 000	28	28	10,7	17,0	1
SND/BND 20×5R	20	5	19,4	16,7	4 700	36	47	11,7	18,3	1
SND/BND 25×5R	25	5	24,6	21,7	4 700	40	51	13	22,7	1
SND/BND 25×10R	25	10	24,6	20,5	4 700	40	51	25,8	43,7	1
SND/BND 32×5R	32	5	31,6	28,7	5 700	50	65	19,1	40,4	1
SND/BND 32×10R	32	10	32	27,8	5 700	50	65	22,6	41,8	1
SND/BND 40×5R	40	5	39,6	36,7	5 700	63	78	25,4	63,2	2
SND/BND 40×10R	40	10	39,4	34	5 700	63	78	63,6	127,1	2
SND/BND 50×10R	50	10	49,7	44	5 700	75	93	70,6	157,6	2
SND/BND 63×10R	63	10	62,8	57	5 700	90	108	78,4	202,9	2

Legend:
(a) = lubrication hole

Symbols, see **page 157**

PN - Precision ball screws

Ball recirculation in composite inserts, preloaded for optimal rigidity. Steel inserts optional

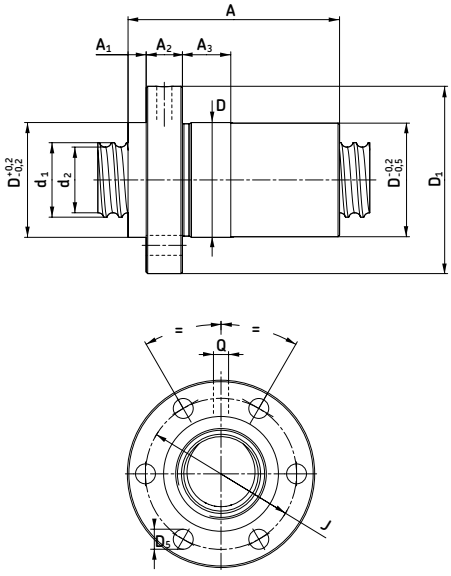

Designations	Dimensions											Basic load ratings	
	Lead											dynamic	static
	d_0	P_h	d_1	d_2	L Max	A	A_2	D g9	D_1	J JS12	G 6x	C_a	C_{oa}
	mm											kN	
PN 16×5R	16	5	15,2	12,7	2 000	48	10	28	48	38	M5	5,7	8,3
PN 20×5R	20	5	19,4	16,7	4 700	52	12	33	57	45	M6	8,2	12,2
PN 25×5R	25	5	24,6	21,7	4 700	64	12	38	62	50	M6	13	22,7
PN 25×10R	25	10	24,6	20,5	4 700	75	10	43	67	55	M6	14,2	21,8
PN 32×5R	32	5	31,6	28,7	5 700	74	12	45	70	58	M6	19,1	40,4
PN 32×10R	32	10	32	27,8	5 700	113	16	54	87	70	M8	22,6	41,8
PN 40×5R	40	5	39,6	36,7	5 700	88	14	53	80	68	M6	25,4	63,2
PN 40×10R	40	10	39,4	34	5 700	128	16	63	95	78	M8	52,5	101,7
PN 50×10R	50	10	49,7	44	5 700	157	16	72	110	90	M10	70,6	157,6
PN 63×10R	63	10	62,8	57	5 700	161	20	85	125	105	M10	78,4	202,9

PND - Precision ball screws

Ball recirculation in composite inserts, nut to DIN standard, preloaded for optimal rigidity. Steel inserts optional

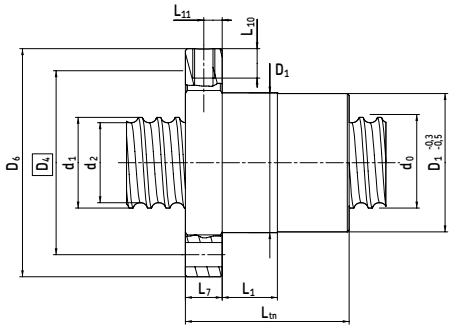

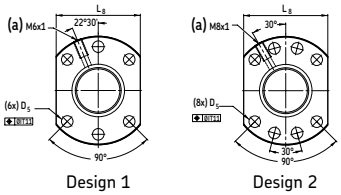

Design 1 Design 2

Designations	Dimensions									Basic load Ratings		Design
	Lead									dynamic	static	
	d_0	P_h	L Max	D_1 g6	D_4	D_5 h13	D_6 h13	L_8 h13	L_{tn}	C_a	C_{oa}	
	mm									kN		
PND 16×5R	16	5	2 000	28	38	5,5	48	40	48	5,7	8,3	1
PND 16×10R	16	10	1 000	28	38	5,5	48	40	87	10,7	17,0	1
PND 20×5R	20	5	4 700	36	47	6,6	58	44	50	8,2	12,2	1
PND 25×5R	25	5	4 700	40	51	6,6	62	48	62	13	22,7	1
PND 25×10R	25	10	4 700	40	51	6,6	62	48	75	14,2	21,8	1
PND 32×5R	32	5	5 700	50	65	9	80	62	74	19,1	40,4	1
PND 32×10R	32	10	5 700	50	65	9	80	62	102	22,6	41,8	1
PND 40×5R	40	5	5 700	63	78	9	93	70	88	25,4	63,2	2
PND 40×10R	40	10	5 700	63	78	9	93	70	130	52,5	101,7	2
PND 50×10R	50	10	5 700	75	93	11	110	85	155	70,6	157,6	2
PND 63×10R	63	10	5 700	90	108	11	110	85	157	78,4	202,9	2

Legend:
(a) = lubrication hole

Symbols, see **page 157**

SL/BL - Long lead ball screws

Ball recirculation through the face.
SL: axial play
BL: backlash elimination by oversize balls.

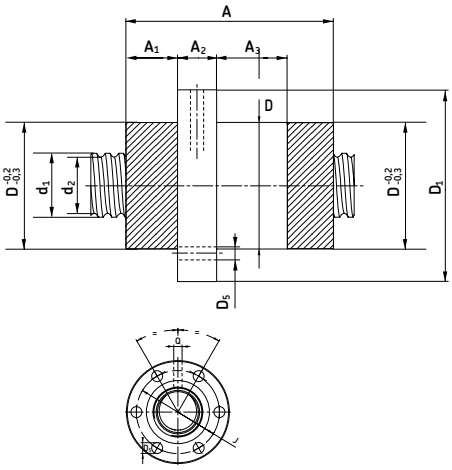

Designations	Dimensions											Basic load ratings	
	Lead											dynamic	static
	d_0	P_h	d_1	d_2	L Max	A	A_2	D g9	D_1	J JS12	G 6x	C_a	C_{oa}
	mm											kN	
SL/BL 25×20R	25	20	24,3	21,7	4 700	66,4	15	48	73	60	M6	23	51,6
SL/BL 25×25R	25	25	24,4	21,5	4 700	77,9	15	48	73	60	M6	22,6	51
SL/BL 32×20R	32	20	30	27,5	5 700	66,4	15	56	80	68	M6	25,7	65,3
SL/BL 32×32R	32	32	31,1	28,4	5 700	80,3	15	56	80	68	M8	26	68,3
SL/BL 32×40R	32	40	29,6	26,9	5 700	55	15	53*	80	68	M6	15,7	38,6
SL/BL 40×20R	40	20	37,7	35,2	5 700	86,8	15	63	95	78	M8	41,8	129,4
SL/BL 40×40R	40	40	38,3	34,2	5 700	110,3	25	72	110	90	M10	53,3	133,8
SL/BL 50×50R	50	50	49,1	43,5	5 700	134	25	85	125	105	M10	94,8	238,2

* Tolerance g6

SLD/BLD - Long lead ball screws

Ball recirculation through the face, nut to DIN standard.
SLD: axial play
BLD: backlash elimination by oversize balls

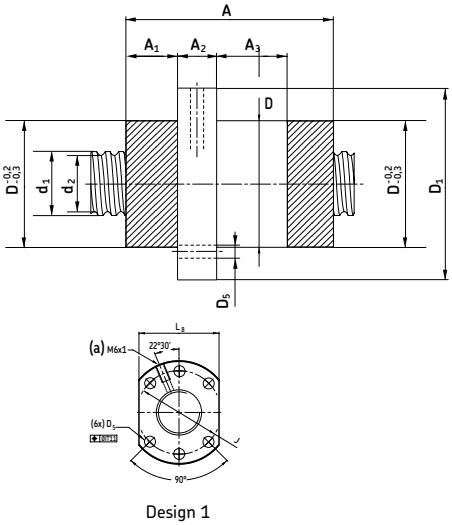

Design 1

Designations	Dimensions											Basic load ratings dynam.	static	Design
	Lead													
	d_0	P_h	d_1	d_2	L Max	A	A_2	D g6	D_1	J JS12	G 6x	C_a	C_{oa}	
	mm											kN		
SLD/BLD 32×32R	32	32	31,1	28,4	5 700	80,3	15	50	80	65	M8	26	68,3	1

Legend:
(a) = lubrication hole

Symbols, see **page 157**

Notes

Rotating nut

The nut rotates inside bearings and moves along the fixed long lead screw shaft. The drive motor moves with the nut, so inertia and critical speed problems, associated with a long rotating shaft, are minimised (**figs. 10** and **11**).

Two versions available:
SLT: rotating nut using ball screw with axial play
BLT: rotating nut using ball screw with backlash elimination.

Size	Ball screw capacities dynamic	static	Bearing axial capacities dynamic	static
	C_a	C_{oa}	C_a	C_{oa}
	kN			
25×20	39,5	96,6	61,8	56
25×25	33,5	80,5	61,8	56
32×20	49,8	141,2	78	76,5
32×32	32,1	87,3	78	76,5
32×40	30	81,7	78	76,5
40×20	54,7	176,7	93,6	91,5
40×40	53,3	133,8	114	118
50×50	94,8	238,2	156	166

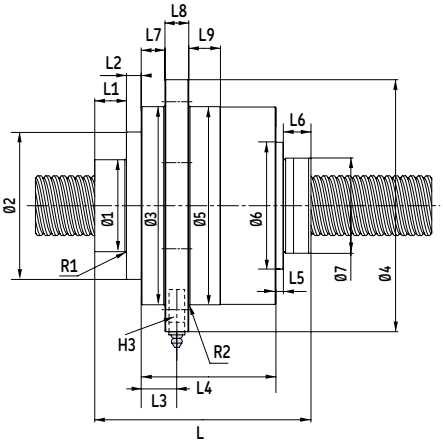

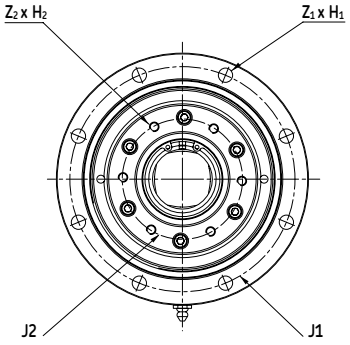

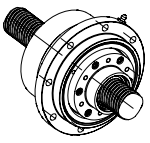

Rotating nut inertia

Size	Inertia Pulley support	Mass of rotating nut
	kgmm^2	kg
25×20	1 012	4,5
25×25	1 023	4,6
32×20	1 935	7,2
32×32	1 919	7,1
32×40	1 949	7,1
40×20	3 095	7,5
40×40	3 784	8,4
50×50	11 482	15,5

Rotating nut capacities

Size	Max transmissible torque	Max transmissible axial load
	Nm	kN
25×20	180	68,3
25×25	180	68,3
32×20	209	107
32×32	209	87,3
32×40	209	81,7
40×20	240	116
40×40	246	93,3
50×50	803	162

Symbols, see **page 157**

Fig. 10



Fig. 11



Designations	Ø1	Ø2	Ø3	Ø4	Ø5	Ø6	Ø7	L	L1	R1	R2	j1	J2	Z1 × H1	Z2 × H2 × useful length	H3
	h8				g6					max	max				mm	
SLT/BLT 25 × 20	40	72,5	100	133	100	65	48	121	15	0,8	0,8	116	55	6 × Ø9	6 × M6 × 20	M6 × 1
SLT/BLT 25 × 25	40	72,5	100	133	100	65	48	126,2	15	0,8	0,8	116	55	6 × Ø9	6 × M6 × 20	M6 × 1
SLT/BLT 32 × 20	50	82	119,5	150	120	76	56	132,4	20	0,8	0,8	135	68	6 × Ø9	6 × M6 × 20	M6 × 1
SLT/BLT 32 × 32	50	82	119,5	650	120	76	50	126,8	20	0,8	0,8	135	68	6 × Ø9	6 × M6 × 20	M6 × 1
SLT/BLT 32 × 40	50	82	119,5	150	120	76	53	125,7	20	0,8	0,8	135	68	6 × Ø9	6 × M6 × 20	M6 × 1
SLT/BLT 40 × 20	58	93	125	159	125	80	63	136,4	20	0,8	0,8	142	75	8 × Ø9	6 × M6 × 20	M8 × 1
SLT/BLT 40 × 40	60	93	137	168	137	102	72	159,3	47	1,6	1,6	153	80	8 × Ø9	6 × M6 × 20	M8 × 1
SLT/BLT 50 × 50	70	120	170	210	170	110	85	163,3	20	1,6	1,6	190	106	8 × Ø11	6 × M8 × 30	M8 × 1

All tolerances js13 if not specified

Symbols, see **page 157**

Shaft end combinations for rolled ball screws

In the order code, shaft end machining is defined by:
– one letter for ∅ < 16 mm
– two letters for ∅ ≥ 16 mm
resulting from the combination of two machined ends (see designation **page 108**).

Machined ends are represented in detail on **page 119** for ∅ < 16 mm and **pages 120–121** for ∅ ≥ 16 mm

∅ < 16 mm		∅ ≥ 16 mm	
Order code	Two machined ends	Order code	Two machined ends
A (without length indication)	cut only	AA (without length indication)	cut only
A (+ length)	cut + annealed		
B	1 + 2	BA	1A + 2A
F*	2 + 2	FA*	2A + 2A
G*	2 + 3	GA*	2A + 3A
H	2 + 4	HA	2A + 4A
J	2 + 5	JA	2A + 5A
M	3 + 5	MA	3A + 5A
S (+ length)	Ends to root diameter, any possible lengths.	SA (+ length)	Ends to root diameter d_2, any possible lengths.
		■ UA (+ length)	End machined to diameter d_3 under induction hardening, any possible lengths.
K	Keyway	K	Keyway
Z	To customer's drawing	Z	To customer's drawing

* Attention! This mounting requires the greatest precautions. Please contact us.

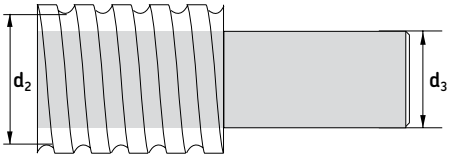

■ UA: end machined to diameter d_3 under induction hardening, any possible lengths.

Dimensions	∅ d_2	∅ d_3	Dimensions	∅ d_2	∅ d_3
	mm			mm	
16×5	12,7	9	**16×5**	12,7	9
20×5	16,7	14	**20×5**	16,7	14
25×5	21,7	19	**25×5**	21,7	19
25×10	20,5	18	**25×10**	20,5	18
25×20	21,7	19	**25×20**	21,7	19
25×25	21,5	18	**25×25**	21,5	18
32×5	28,7	26	**32×5**	28,7	26
32×10 DIN	27,8	25	**32×10 DIN**	27,8	25
32×10	26	23	**32×10**	26	23
32×20	27,5	24	**32×20**	27,5	24

Symbols, see **page 157**

Standard end machining for nominal diameter < 16 mm

Special ends are machined to customer drawing on request

Type 1

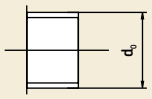

Type 2

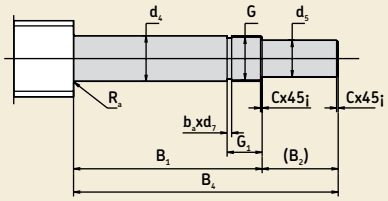

Type 3

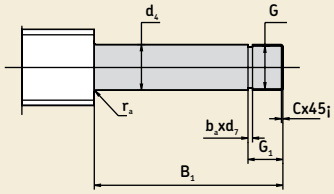

Type 4

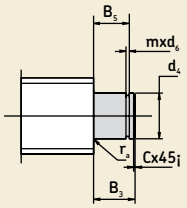

Type 5

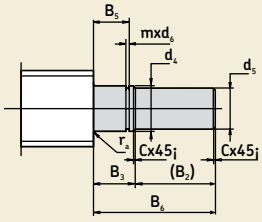

Keyway

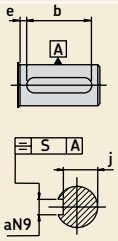

End Length

Dimensions

Size d_0	d_5	d_4	B_1	B_2	B_3	B_4	B_5	B_6	G	G_1	m	d_6	c	b_a	d_7	r_a	a	b	e	j	S	Keyway
	h_7	js_7	js_{12}		js_{12}	js_{12}	H_{11}	js_{12}	g6		+0,14 0	h_{11}/h_{12}			h_{11}	maxi	N9	+0,5 0				DIN 6885
6	3	4	22	10	7	32	5,4	17	M4×0,7	7	0,5	3,8	0,5	1,2	2,9							
8	4	5	24	12	7	36	5,6	19	M5×0,8	7,2	0,7	4,8	0,5	1,2	3,7	0,3						
10	5	6	26	12	9	38	6,7	21	M6×1	7,5	0,8	5,7	0,5	1,5	4,5	0,3						
12/12,7	6	8	38	12	10	50	7,8	22	M8×1	2,5	0,9	7,6	0,5	1,5	6,5	0,3	2	8	3	4,8	0,1	A2×2×8
14	8	10	40	16	12	56	9	28	M10×1,5	13,3	1,1	9,6	0,5	2,3	7,8	0,3	2	10	3	6,8	0,1	A2×2×10

Symbols, see **page 157**

Standard end machining for nominal diameter ≥ 16 mm

Standard shaft ends for ball screws, nominal diameter ≥ 16 mm, have been developed to suit the SKF thrust bearings FLBU, PLBU and BUF.

These standard ends are the same for all screw types.
However, for the "SL/TL" long lead screw, an additional shoulder, part of the threaded length, will be machined to protect the wiper and nut thread during assembly (both sides) Apart from this, the end itself is the same for all screw types.

End bearing ⇒	Machined end type
FLBU	2A or 3A
PLBU	2A or 3A
BUF	4A or 5A

For SD/BD, SX/BX, SN/BN/PN, SND/BND/PND

Dimensions																							Keyway to DIN 6885 aN9 xi xb	
Size d_0	d_5	d_4	d_{10}	d_{11}	d_{12}	B_1	B_2	B_3	B_4	B_5	B_6	B_7	B_9	d_8	G	G_1	m	d_6	c	c_1	b_a	d_7	r_a	fixed end (type 2A)	free end (type 5A)
	h_7	h_6		h_6	h_7	js_{12}		js_{12}	js_{12}	H_{11}	js_{12}				g6		+0,14 0	h_{11}/ h_{12}				h_{11}			
16	8	10	/	10	8	53	16	13	69	10	29	2	0	12,5	M10×0,75	17	1,1	9,6	0,5	0,5	1,2	8,8	0,4	A2×2×12	A2×2×12
20	10	12	/	10	8	58	17	13	75	10	29	2	0	14,5	M12×1	18	1,1	9,6	0,5	0,5	1,5	10,5	0,8 0,4[1]	A3×3×12	A2×2×12
25	15	17	/	17	15	66	30	16	96	13	46	4,5	0	20	M17×1	22	1,1	16,2	0,5	0,5	1,5	15,5	0,8 0,4[1]	A5×5×25	A5×5×25
32	17	20	/	17	15	69	30	16	99	13	46	4,5	0	21,7	M20×1	22	1,1	16,2	0,5	0,5	1,5	18,5	1,2 0,8[1]	A5×5×25	A5×5×25
40	25	30	/	30	25	76	45	22	121	17,5	67	4,5	0	33,5	M30×1,5	25	1,6	28,6	1	0,5	2,3	27,8	0,8 0,4[1]	A8×7×40	A8×7×40
50	30	35	/	30	25	84	55	22	139	17,5	67	4,5	0	35,5	M35×1,5	27	1,6	28,6	1	0,5	2,3	32,8	1,2 0,8[1]	A8×7×45	A8×7×40
63	40	50	/	45	40	114	65	28	179	20,75	93	3	0	54	M50×1,5	32	1,85	42,5	1,5	1	2,3	47,8	1,2 0,8[1]	A12×8×50	A12×8×50

[1] For ends 4A or 5A

For SL/BL only

Symbols, see **page 157**

Dimensions																								Keyway to DIN 6885 aN9 xi xb	
Size d_0	d_5	d_4	d_{10}	d_{11}	d_{12}	B_1	B_2	B_3	B_4	B_5	B_6	B_7	B_9	d_8	G	G_1	m	d_6	c	c_1	b_a	d_7	r_a	fixed end (type 2A)	free end (type 5A)
	h_7	h_6		h_6	h_7	js_{12}		js_{12}	js_{12}	H_{11}	js_{12}				g6		+0,14 0	h_{11}/ h_{12}				h_{11}			
25×20	15	17	/	17	15	66	30	16	96	13	46	4,5	0	21,7	M17×1	22	1,1	16,2	0,5	0,5	1,5	15,5	0,8	A5×5×25	A5×5×25
25×25	15	17	/	17	15	66	30	16	96	13	46	4,5	0	21,5	M17×1	22	1,1	16,2	0,5	0,5	1,5	15,5	0,8 1,2	A5×5×25	A5×5×25
32×20	17	20	21,5	17	15	69	30	16	99	13	46	4,5	2	27,4	M20×1	22	1,1	16,2	0,5	0,5	1,5	18,5	0,8[1] 1,2	A5×5×25	A5×5×25
32×32	17	20	21,5	17	15	69	30	16	99	13	46	4,5	2	28,4	M20×1	22	1,1	16,2	0,5	0,5	1,5	18,5	0,8[1] 1,2	A5×5×25	A5×5×25
32×40	17	20	21,5	17	15	69	30	16	99	13	46	4,5	2	26,9	M20×1	22	1,1	28,6	0,5	0,5	1,5	18,5	0,8[1]	A5×5×25	A5×5×25
40×20	25	30	/	30	25	76	45	22	121	17,5	67	6,5	0	35,2	M30×1,5	25	1,6	28,6	1	0,5	2,3	27,8	0,8	A8×7×40	A8×7×40
40×40	25	30	/	30	25	76	45	22	121	17,5	67	6,5	0	35	M40×1,5	25	1,6	28,6	1	0,5	2,3	27,8	0,8 1,2	A8×7×40	A8×7×40
50×50	30	35	37	30	25	84	55	22	139	17,5	67	4,5	3	43,4	M35×1,5	27	1,6	28,6	1	0,5	2,3	32,8	0,8[1]	A8×7×45	A8×7×40

[1] For ends 4A or 5A

Standard machining ends for nominal diameter ≥ 16 mm

Threaded length = total length - end length.

Type 1A

For SL/BL only

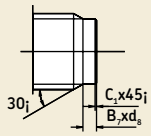

For other types

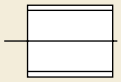

Type 2A

For SL/BL only

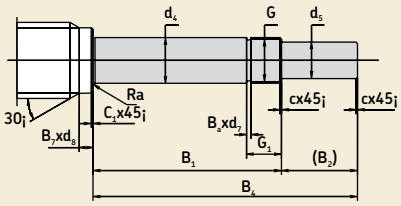

For other types

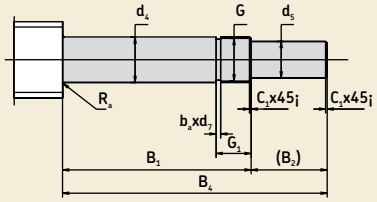

Type 3A

For SL/BL only

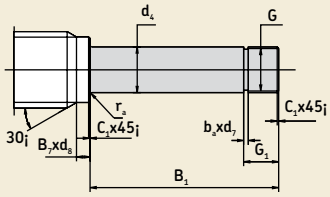

For other types

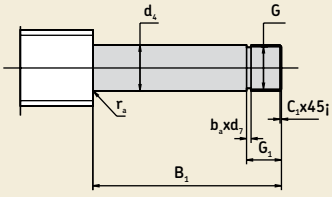

Type 4A

For SL/BL only

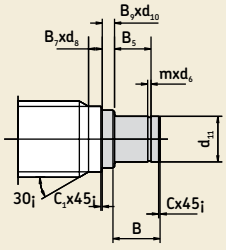

For other types

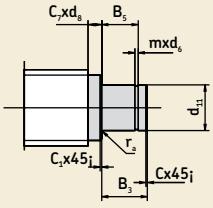

Type 5A

For SL/BL only

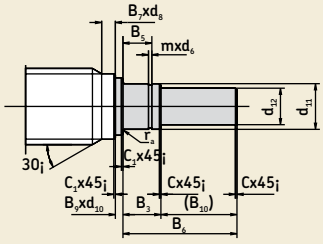

For other types

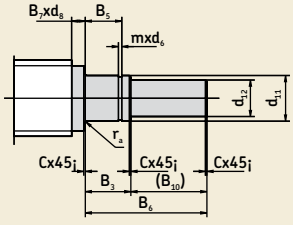

Keyway

For SL/BL only

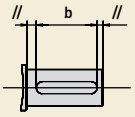

For other types

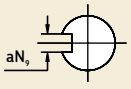

End Length

Symbols, see **page 157**

PLBU

Accessories for screw shaft, plummer bearing units: End bearings, fixed plummer housing with angular contact ball bearings (back-to-back arrangement). Designed for standard end machining 2A or3A

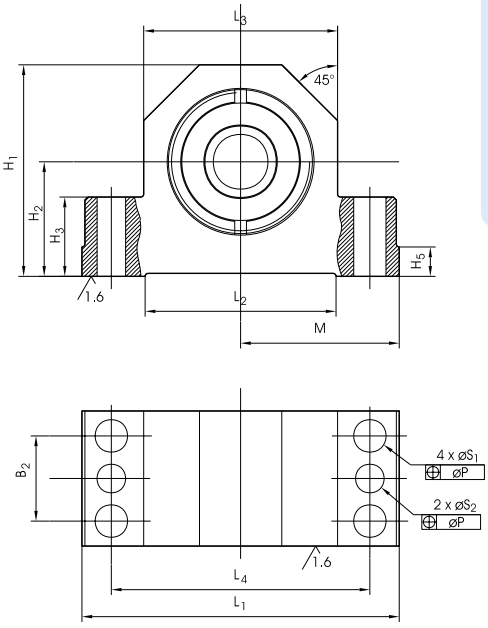

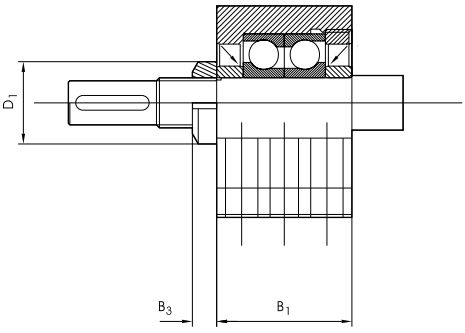

Designations	Dimensions								Basic load ratings dynamic	static
	d_0	B_1	B_2	H_1	H_2 JS7	L_1	L_4	S_1 H12	C_a	C_{oa}
	mm								kN	
PLBU 16	16	37	23	58	32	86	68	9	12,2	12,8
PLBU 20	20	42	25	64	34	94	77	9	13,3	14,7
PLBU 25	25	46	29	72	39	108	88	11	27,9	31,9
PLBU 32	32	49	29	77	45	112	92	11	24,6	31,9
PLBU 40	40	53	32	98	58	126	105	13	41,9	59,6
PLBU 50	50	59	35	112	65	144	118	13	54,5	79,8
PLBU 63	63	85	40	130	65	190	160	13	128	196,1

FLBU

Accessories for screw shaft, flanged bearing units: End bearings, axially locating flanged housing with angular contact ball bearings (back-to-back arrangement). Designed for standard end machining 2A or 3A

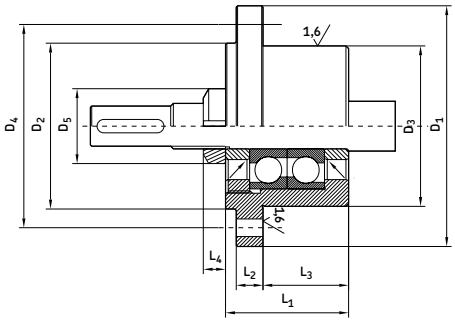

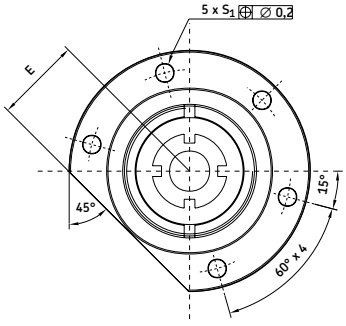

Designations	Dimensions							Basic load ratings dynamic	static
	d_0	D_1	D_3 h7	D_4	L_1	L_3	S_1 H13	C_a	C_{oa}
	mm							kN	
FLBU 16	16	76	47	63	37	22	6,6	12,2	12,8
FLBU 20	20	76	47	63	42	25	6,6	13,3	14,7
FLBU 25	25	90	60	76	46	32	6,6	27,9	31,9
FLBU 32	32	90	60	74	49	32	9	24,6	31,9
FLBU 40	40	120	80	100	53	32	11	41,9	59,6
FLBU 50	50	130	90	110	59	32	13	54,5	79,8
FLBU 63	63	165	124	146	85	43,5	13	128	196,1

Symbols, see **page 157**

BUF - Plummer bearings

End bearings, axially free plummer housing with deep-groove ball bearing. Designed for standard end machining 4A or 5A

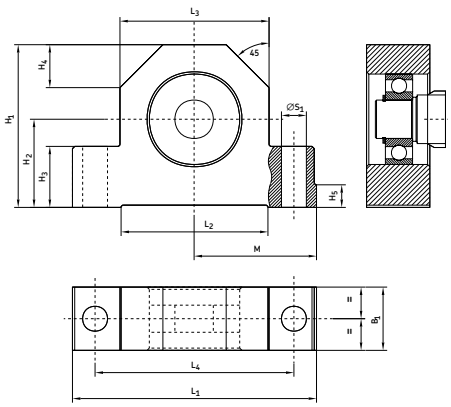

Designations	Dimensions							Basic load ratings dynamic	static
	d_0	B_1	H_1	H_2 JS7	L_1	L_4	S_1 H12	C_a	C_{oa}
	mm							kN	
BUF 16	16	24	58	32	86	68	9	5,07	2,36
BUF 20	20	26	64	34	94	77	9	5,07	2,36
BUF 25	25	28	72	39	108	88	11	9,56	4,75
BUF 32	32	34	77	45	112	92	11	9,56	4,75
BUF 40	40	38	98	58	126	105	13	19,5	11,2
BUF 50	50	39	112	65	144	118	13	19,5	11,2
BUF 63	63	38	130	65	190	160	13	33,2	21,6

FBS - Q

Accessories for ground shaft, flanged bearing units: End bearings, axially locating flanged housing with high precision angular contact ball bearings (back-to-back arrangement, 4 matched in set)

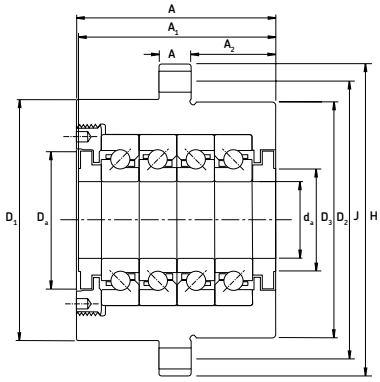

Designations	Dimensions								Basic load ratings dynamic	static
	d_0	A	A_2	A_3	D_1	D_2	H	J	C_a	C_{oa}
	mm								kN	
FBS 204/QXXX	20	77	32	13	64	60	90	76	34,5	71
FBS 25/QXXX	25	82	32	15	88	80	120	102	53	116
FBS 30/QXXX	30	82	32	15	88	80	120	102	45,5	108
FBS 35/QXXX	35	82	32	15	98	90	130	113	57	143
FBS 40/QXXX	40	106	43,5	17	128	124	165	146	100	245
FBS 45/QXXX	45	106	43,5	17	128	124	165	146	129	320
FBS 50/QXXX	50	106	43,5	17	128	124	165	146	129	320

FBS - D

Accessories for ground shaft, flanged bearing units: End bearings, axially locating flanged housing with high precision angular contact ball bearings (back-to-back arrangement, 2 matched in set)

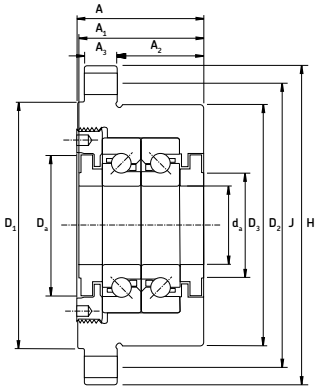

Designations	Dimensions								Basic load ratings dynamic	static
	d_0	A	A_2	A_3	D_1	D_2	H	J	C_a	C_{oa}
	mm								kN	
FBS 204/DXXX	20	47	32	13	64	60	90	76	21,2	35,5
FBS 25/DXXX	25	52	32	15	88	80	120	102	32,5	58,5
FBS 30/DXXX	30	52	32	15	88	80	120	102	28,1	54
FBS 35/DXXX	35	52	32	15	98	90	130	113	35,1	71
FBS 40/DXXX	40	66	43,5	17	128	124	165	146	61,8	122
FBS 45/DXXX	45	66	43,5	17	128	124	165	146	79,3	160
FBS 50/DXXX	50	66	43,5	17	128	124	165	146	79,3	160

Symbols, see **page 157**

Ground ball screws

SKF offers a wide range of ground ball screws (**figs. 12** and **13**) to cover all requirements

- Flanged nut with internal preload, DIN standard
- Double preloaded flanged nut, DIN standard
- Double cylindrical preloaded nut
- Single nut with axial play DIN standard
- Single nut preloaded end flange
- Double nut preloaded end flange
- Double nut preloaded center flange
- Single nut preloaded cam shaped

Fig. 12



Fig. 13



Service range (Europe only)

General rules

Delivery time	• one / two weeks without machined ends • three week with ends machined to customer drawings.
Quantity	Max. 3 pieces for standard PGFJ, PGFE, SGFE, DIN standard.
Precision classes	G3 - G5 - G7
Materials	• Standard steel only for the shafts • C53 for the screws • 18NiCrMo5 for the nuts (refer to our catalogue 4621).
Capabilities	• Screw shafts, right hand, single start, as per customer drawing (splines and hollow shafts excepted). • Neither stainless steel nor special treatments are accepted through this quick channel. • Maximum length : 1 800 mm except for 25×5 which is limited to 1 000 mm
Sizes	• 25×5 • 50×5 • 32×5 • 50×10 • 40×5 • 50×20 (except for PGFJ) • 40×10 • 63×10

Standard range (all countries)

Diameters	Leads	Nut types	Precision classes
From 12,7 to 152 mm	From 2,5 to 40 mm	Cylindrical or flanged nuts with preload or axial play	G1 - G3 - G5
From 0,5 to 6 inches	From 0,1 to 1,6 inches	Cylindrical or flanged nuts with preload or axial play	G1 - G3 - G5

N.B.:
In addition to this catalogue, all product brochures are available on **www.skf.com** *as PDF files.*

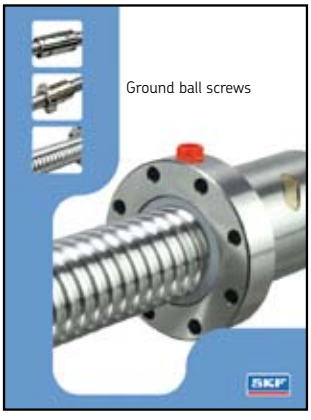

Publication nr. 4621 EN



Publication nr. 985-601

Ordering key



Nut type:
Nut with internal preload, DIN standard PGFJ
Double preloaded flanged nut, DIN PGFE
Nut with axial play, DIN SGFE
Double nut preloaded end flange PGFM

Nominal diameter × lead (mm)

Hand:
Right R
Left (on request) L

Number of circuits of balls

Threaded length / Total length (mm); (in) for PGFM

Lead precision:
G5, G3, G1

Nut orientation:
Threaded side or flange of nut towards shorter (S) or longer (L) machined end of shaft
In case of same end machining (–)

Machined end combination to customer's drawing

Wipers:
Always with wipers

Example: PGFE | 32×5 | R | 4 | 330 / 445 | G1 | L - HA | +K | WPR

PGFE - Ground ball screws

Double flanged nut, preloaded,
DIN standard

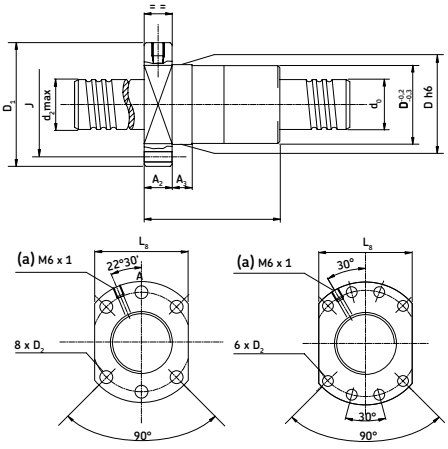

Design 1 Design 2

Legend:
(a) = lubrication hole

Designations	Dimensions								No. of circuits of balls	Basic load ratings		Design
	Lead									dynamic	static	
	d_0	P_h	D h6	D_1	J	A	A_2	L_8		C_a	C_{oa}	
	mm								No.	kN		
PGFE 16×5 R	16	5	28	48	38	79	12	40	3	9,7	14,2	1
PGFE 20×5 R	20	5	36	58	47	79	12	44	3	13,4	24,5	1
PGFE 25×5 R	25	5	40	62	51	88	14	48	3	15,6	33,6	1
PGFE 25×10 R	25	10	40	62	51	123	15	48	3	20,2	39,5	1
PGFE 32×5 R	32	5	50	80	65	89	15	62	4	17,3	42,8	1
PGFE 32×10 R	32	10	50	80	65	146	18	62	3	42,2	80	1
PGFE 40×5 R	40	5	63	93	78	100	16	70	4	24,6	73	2
PGFE 40×10 R	40	10	63	93	78	146	18	70	3	46,5	98	2
PGFE 50×10 R	50	10	75	110	93	168	20	85	4	68	170	2
PGFE 63×10 R	63	10	90	125	108	170	22	95	4	77,5	227	2

SGFE - Ground ball screws

Single Flanged nut, axial play,
DIN standard

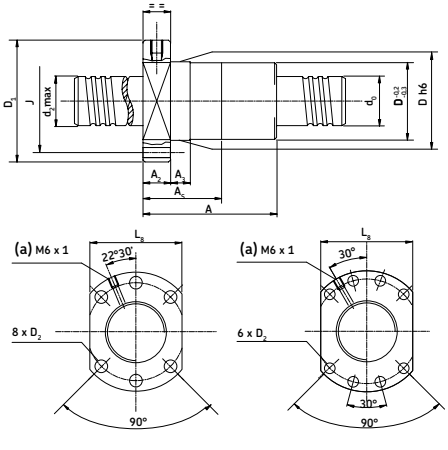

Design 1 Design 2

Legend:
(a) = lubrication hole

Designations	Dimensions								No. of circuits of balls	Basic load ratings		Design
	Lead									dynamic	static	
	d_0	P_h	D h6	D_1	J	A	A_2	L_8		C_a	C_{oa}	
	mm								No.	kN		
SGFE 16×5 R	16	5	28	48	38	45,5	12	40	3	9,7	14,2	1
SGFE 20×5 R	20	5	36	58	47	45,5	12	44	3	13,4	24,5	1
SGFE 25×5 R	25	5	40	62	51	51	14	48	3	15,6	33,6	1
SGFE 25×10 R	25	10	40	62	51	69	15	48	3	20,2	39,5	1
SGFE 32×5 R	32	5	50	80	65	52	15	62	4	17,3	42,8	1
SGFE 32×10 R	32	10	50	80	65	82	18	62	3	42,2	80	1
SGFE 40×5 R	40	5	63	93	78	58	16	70	4	24,6	73	2
SGFE 40×10 R	40	10	63	93	78	82	18	70	3	46,5	98	2
SGFE 50×10 R	50	10	75	110	93	94	20	85	4	68	170	2
SGFE 63×10 R	63	10	90	125	108	96	22	95	4	77,5	227	2

N.B.:
Thrust bearing units for ground ball screw, see ***page 123****.*

Symbols, see **page 157**

PGFJ - Ground ball screws

Flanged nut, with internal preload, DIN standard

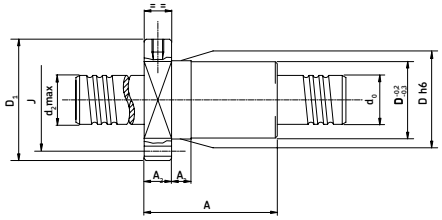

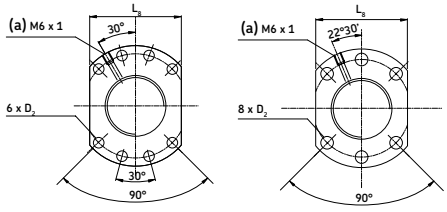

Design 1 Design 2

Legend:
(a) = lubrication hole

Designations	Dimensions								No. of circuits of balls	Basic load ratings		Design
	Lead									dynamic	static	
	d_0	P_h	D h6	D_1	J	A	A_2	L_8		C_a	C_{oa}	
	mm								No.	kN		
PGFJ 16×5 R	16	5	28	48	38	63	12	40	3	9,7	14,2	1
PGFJ 20×5 R	20	5	36	58	47	65	12	44	3	13,4	24,5	1
PGFJ 25×5 R	25	5	40	62	51	68	14	48	3	15,6	33,6	1
PGFJ 25×10 R	25	10	40	62	51	104	15	48	3	20,2	39,5	1
PGFJ 32×5 R	32	5	50	80	65	81	15	62	4	22,1	57	1
PGFJ 32×10 R	32	10	50	80	65	117	18	62	3	42,2	80	1
PGFJ 40×5 R	40	5	63	93	78	82	16	70	4	24,6	73	2
PGFJ 40×10 R	40	10	63	93	78	142	18	70	3	59,6	130	2
PGFJ 50×10 R	50	10	75	110	93	144	20	85	4	68	170	2
PGFJ 63×10 R	63	10	90	125	108	147	22	95	4	30	120	2

N.B.:
Thrust bearing units for ground ball screw, see ***page 123****.*

Symbols, see **page 157**

Precision ground screw (fig. 14)

Screw diameter from 0,5 to 6 inches. Lead from 0,1 to 1 inch. Any lead metric/inch possible. Flange position and holes pattern can be adjusted upon request. Screw bearing support units FLRBU, FLBU, PLBU or BUF.

PGFM double nut preloaded end flange
PGF single nut preloaded end flange

Fig. 14



Designations	Screw diameter	Lead	Locating diameter	Flange diameter	Bolt circle	Double nut length	Flange thickness	Single nut length	Basic load ratings	
									dynamic	static
	d_0	P_h	D	D_1	J	A	A_2	A_5	C_a	C_{oa}
	in								lbf	
PGFM 0,5×0,1	0,5	0,1	1	1,875	1,437	2,25	0,437	1,35	1 204	2 270
PGFM 0,5×0,2	0,5	0,2	1,25	2,1255	1,687	3,625	0,437	2,225	137	3 302
PGFM 0,625×0,1	0,625	0,1	1,125	2	1,562	2,25	0,437	1,35	1 327	2 867
PGFM 0,625×0,2	0,625	0,2	1,375	2,25	1,812	3,5	0,437	1,9	1 213	5 205
PGFM 0,625×0,25	0,625	0,25	1,625	2,5	2,062	3,937	0,437	2,187	1 124	6 220
PGFM 0,75×0,1	0,75	0,1	1,25	2,25	1,75	2,25	0,437	1,35	1 457	3 559
PGFM 0,75×0,2	0,75	0,2	1,562	2,562	2,062	3,5	0,437	1,9	1 573	6 416
PGFM 0,75×0,25	0,75	0,25	1,625	2,625	2,125	3,937	0,437	2,187	1 804	876
PGFM 0,875×0,2	0,875	0,2	1,687	2,687	2,187	3,5	0,437	1,9	16	89
PGFM 0,875×0,25	0,875	0,25	1,75	2,75	2,25	3,937	0,437	2,187	1 163	9 357
PGFM 1,0×0,1	1	0,1	1,625	2,625	2,125	2,312	0,5	1,412	1 626	4 752
PGFM 1,0×0,2	1	0,2	1,812	2,812	2,312	3,562	0,5	1,962	1 262	9 223
PGFM 1,0×0,25	1	0,25	2,125	3,125	2,625	4,312	0,5	2,312	1 908	12 572
PGFM 1,25×0,2	1,25	0,2	2,062	3,062	2,562	3,562	0,5	1,962	1 698	11 648
PGFM 1,25×0,25	1,25	0,25	2,125	3,125	2,625	4	0,5	2,25	1 848	14 366
PGFM 1,25×0,5	1,25	0,5	2,5	3,5	3	7,125	0,5	3,812	1 147	20 759
PGFM 1,5×0,2	1,5	0,2	2,312	3,312	2,812	3,687	0,625	2,087	166	1 472
PGFM 1,5×0,25	1,5	0,25	3,562	3,562	3,062	4,437	0,625	2,437	1 802	20 656
PGFM 1,5×0,5	1,5	0,5	3,25	4,5	3,875	7,375	0,625	3,875	163	3 624
PGFM 1,75×0,2	1,75	0,2	2,625	3,875	3,25	3,812	0,75	2,212	1 474	16 887
PGFM 1,75×0,25	1,75	0,25	2,875	4,125	3,5	4,562	0,75	2,5	1 418	24 274
PGFM 1,75×0,5	1,75	0,5	3,5	4,75	4,125	7,5	0,75	4	1 276	43 286
PGFM 1,75×0,75	1,75	0,75	3,5	4,75	4,125	10,125	0,875	4,875	1 129	4 365
PGFM 2,0×0,2	2	0,2	2,937	4,187	3,562	3,182	0,75	2,212	1 757	19 310
PGFM 2,0×0,25	2	0,25	3,125	4,375	3,75	4,562	0,75	2,562	1 964	27 890
PGFM 2,0×0,5	2	0,5	3,75	5,5	4,625	7,5	0,75	3,812	1 180	50 548
PGFM 2,0×0,75	2	0,75	3,75	5,5	4,625	10,125	0,875	4,875	24 057	50 350
PGFM 2,0×1,0	2	1,75	3,75	5,5	4,625	11	1,25	6	18 375	36 723
PGFM 2,0×0,25	2,25	0,25	3,312	5	4,187	4,562	0,75	2,562	10 456	31 504

Symbols, see **page 157**

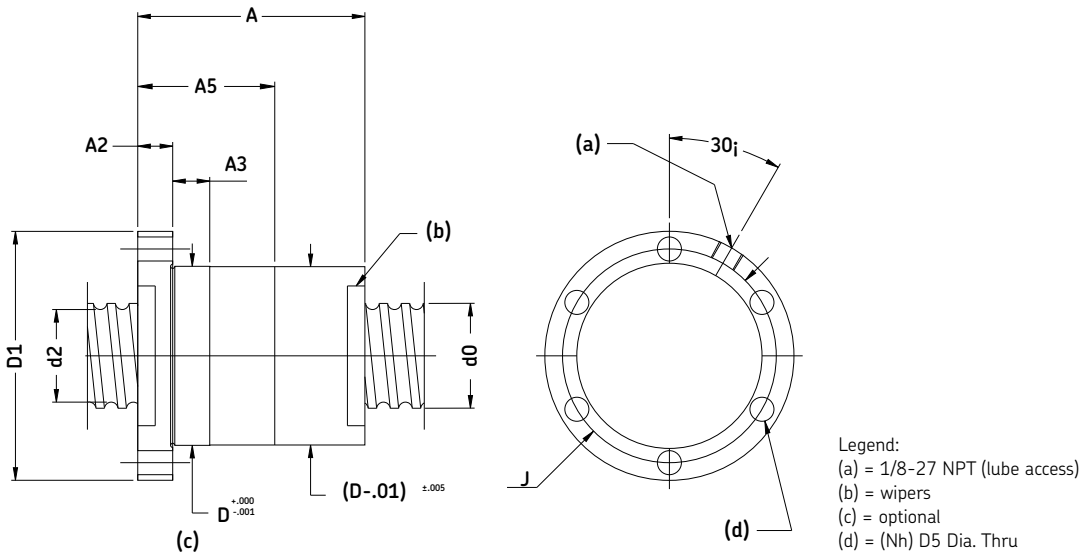

Legend:
(a) = 1/8-27 NPT (lube access)
(b) = wipers
(c) = optional
(d) = (Nh) D5 Dia. Thru

Designations	Screw diameter	Lead	Locating diameter	Flange diameter	Bolt circle	Double nut length	Flange thickness	Single nut length	Basic load ratings	
									dynamic	static
	d_0	P_h	D	D_1	J	A	A_2	A_5	C_a	C_{oa}
	in								lbf	
PGFM 2,25×0,5	2,25	0,5	4,125	5,875	5	7,5	0,75	4	25 853	57 810
PGFM 2,25×0,75	2,25	0,75	4,125	5,875	5	10,125	0,875	4,875	25 749	57 631
PGFM 2,25×1,0	2,25	1	4,125	5,875	5	13	1,25	7	26 599	60 759
PGFM 2,5×0,25	2,5	0,25	3,625	5,375	4,5	4,562	0,75	2,562	11 089	35 996
PGFM 2,5×0,5	2,5	0,5	4,375	6,375	5,375	7,5	0,75	4	27 349	65 072
PGFM 2,5×0,75	2,5	0,75	4,375	6,375	5,375	10,125	0,875	4,875	28 208	68 325
PGFM 2,5×1,0	2,5	1	5,25	7,25	6,25	14,5	1,25	7	38 815	83 037
PGFM 3,0×0,25	3	0,25	4,125	6,15	5,125	4,687	0,875	2,687	11 880	43 226
PGFM 3,0×0,5	3	0,5	4,812	6,812	5,812	7,625	0,875	4,125	30 815	83 057
PGFM 3,0×0,75	3	0,75	5,75	7,75	6,75	11,375	0,875	6,125	43 353	102 706
PGFM 3,0×1,0	3	1	5,75	7,75	6,75	14,5	1,25	7,5	43 216	102 455
PGFM 3,5×0,5	3,5	0,5	5,375	7,375	6,375	7,75	1	4,25	32 975	97 605
PGFM 3,5×0,75	3,5	0,75	5,875	7,875	6,875	11,5	1	6,25	48 593	128 184
PGFM 3,5×1,0	3,5	1	6,5	8,5	7,5	14,75	1,25	7,75	62 805	150 171
PGFM 4,0×0,5	4	0,5	5,875	7,875	6,875	8	1,25	4,5	34 886	112 145
PGFM 4,0×0,75	4	0,75	6,75	8,75	7,75	11,75	1,25	6,5	51 693	147 601
PGFM 4,0×1,0	4	1	7	9	8	14,75	1,25	7,75	69 004	180 105
PGFM 5,0×0,5	5	0,5	6,75	8,75	7,75	8	1,25	4,5	38 194	141 214
PGFM 5,0×0,75	5	0,75	7,75	9,75	8,75	11,75	1,25	6,875	56 974	186 401
PGFM 5,0×1,0	5	1	8	10	9	14,75	1,25	7,75	77 221	230 571
PGFM 6,0×0,5	6	0,5	7,75	9,75	8,75	8	1,25	4,5	41 600	173 819
PGFM 6,0×0,75	6	0,75	8,75	10,75	9,75	11,75	1,25	6,5	61 435	225 174
PGFM 6,0×1,0	6	1	9	11	10	14,75	1,25	7,75	84 043	281 022

Symbols, see **page 157**

Applications

In response to industry's ultimate need to produce more with less, SKF has combined its knowledge and experience with the latest technology to develop solutions for your specific conditions. Whether your goal is to design equipment that provides more customer value, or to increase overall profitability, with SKF experience and expertise, you're likely to find a real solution.

Machine tool

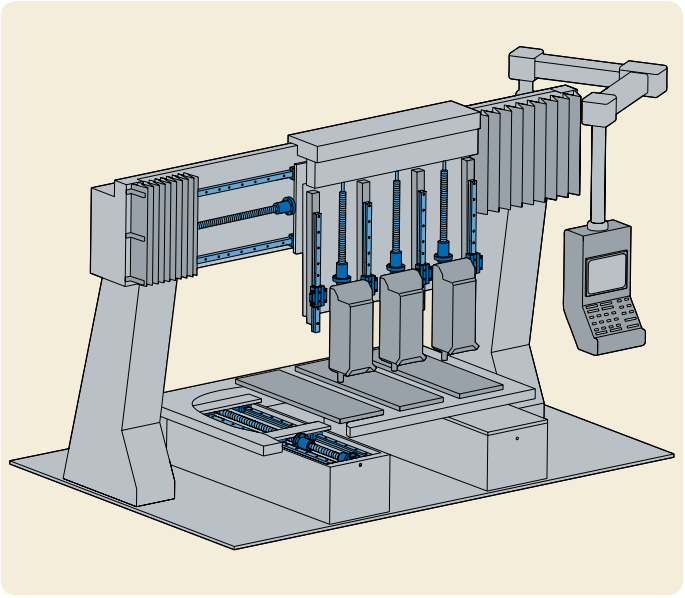

Components application
a) Ground ball screws

Textile machine

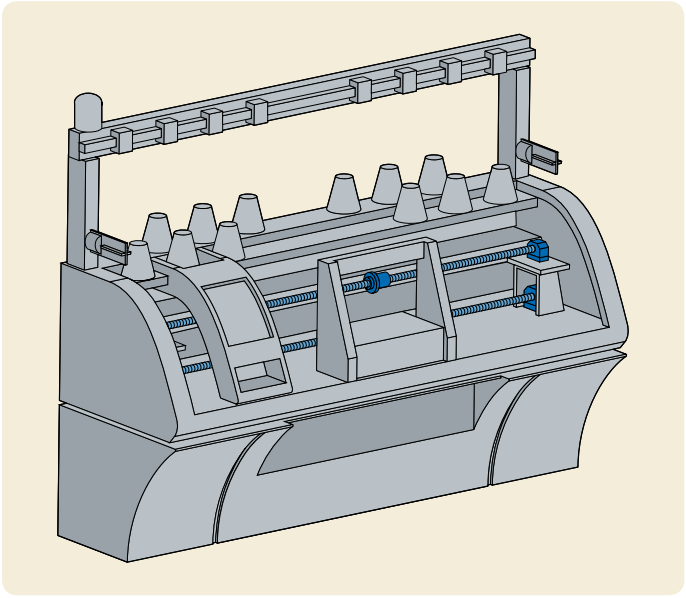

Components application
a) Precision ball screws

Electroerosion

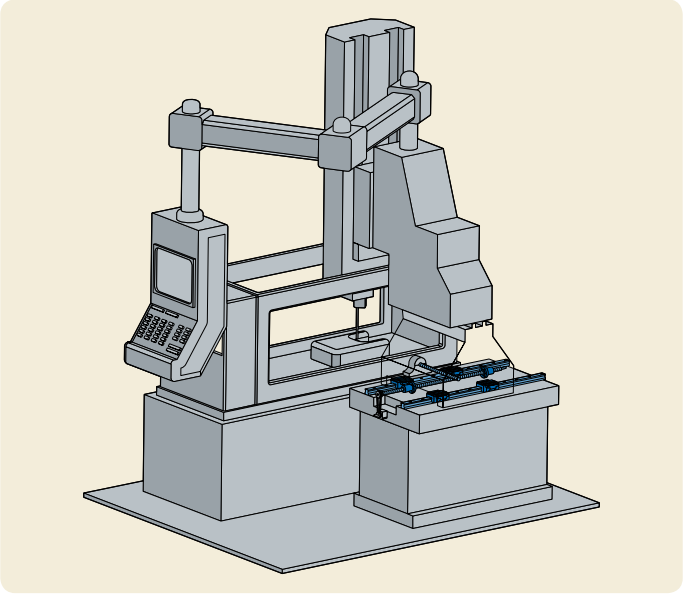

Components application
a) Precision ball screws
b) Profile rail guides

Pick and place robot for laboratory

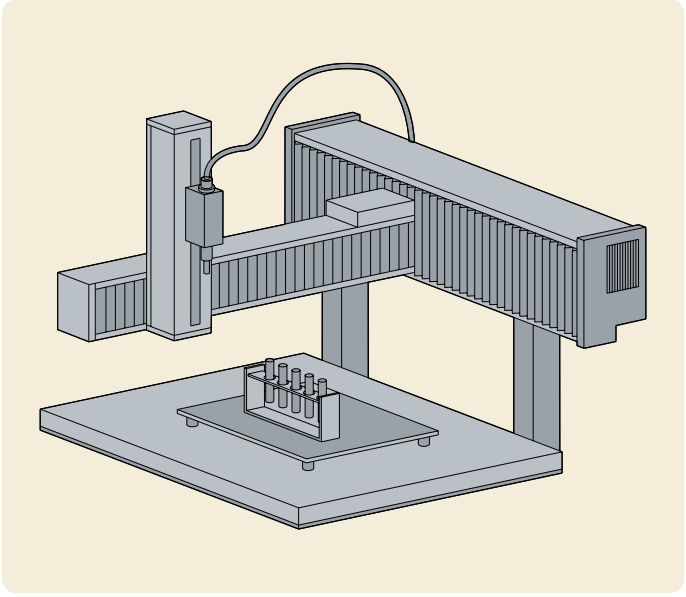

Components application
a) Precision ball screws

Roller screws

There are two non-competing designs to cover requirements beyond ball screw limitations. Load transfer from the nut to the screw shaft through a number of threaded or grooved rollers: the resulting large number of contact points ensures a much higher load carrying capacity and a much longer life than ball screws of similar size.

"SR" Planetary roller screws (**fig. 15**)

Non-recirculating rollers yield high speed and acceleration capabilities, exceptional reliability and resistance to adverse environments.

"SV" Recirculating roller screws (**fig. 16**)

Very fine lead of thread (1 mm) allows high positioning accuracy, repeatability and exceptional rigidity.

Fig. 15

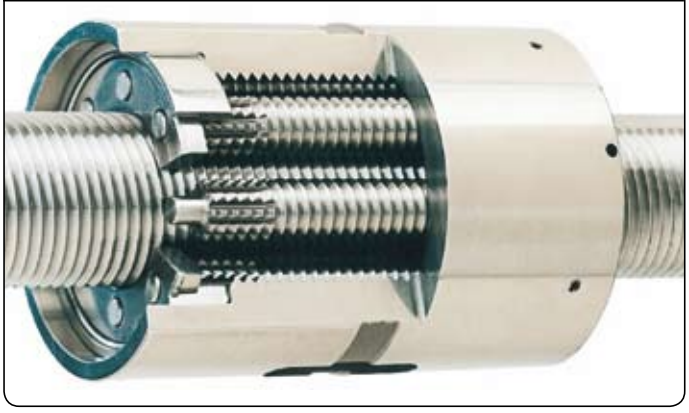

SR planetary roller screw

Fig. 16

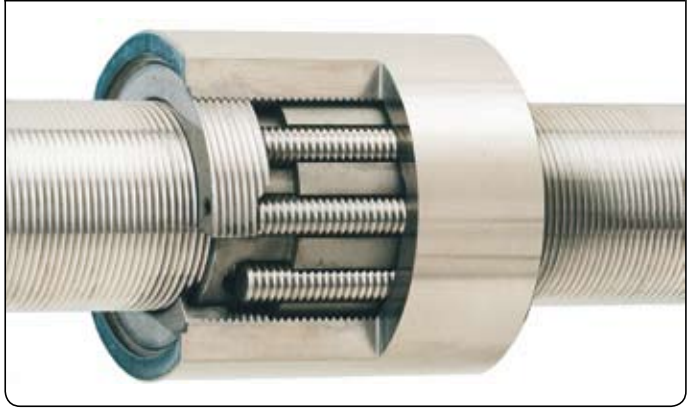

SV recirculating roller screw

Ten reasons for using roller screws

- High load ratings (SR-SV)
- Very high rotational speed (SR)
- High acceleration and deceleration rates (SR)
- Long life at high cycle rates (SR)
- High reliability (SR-SV)
- Resistance to hostile surroundings (SR)
- Ability to accommodate shock loads (SR)
- Small displacements with very good repeatability (SV)
- Nut rotation when speed becomes critical (SR)
- Frequent removal of the nut from the screw shaft (SR, most SV)

Type	Features
SR SV	Higher static load up to 12 000 kN
SR SV	Higher dynamic load up to 2 235 kN
SR	Higher rotational speed - ∅ 48 at over 3 000 rpm
SR	Higher acceleration over 12 000 rad/sec^2
SR	Shock loads
SR	Adverse environments (dust, ice, sand)
SV	1 mm lead
SR SV	Stainless steel

N.B.:
In addition to this catalogue, all product brochures are available on **www.skf.com** *as PDF files.*



Publication nr. 4351 EN

Planetary roller screws (**fig. 17**)

Fig. 17



Features
- Many strong contact surfaces
- Non-recirculating rollers
- No weak point in the nut

Benefits
- Long life: high load carrying capacity
- Robust and shock resistant
- Exceptional reliability
- High speed & acceleration capabilities

Threaded rollers are the basis of SR/BR/TR/PR planetary roller screws (**fig. 18**).

Fig. 18

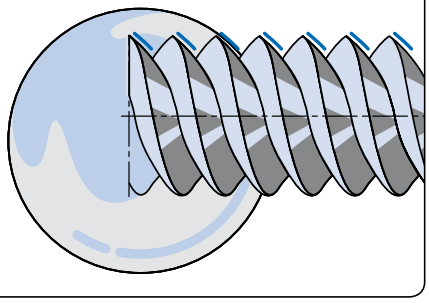

Typical applications

The capacity to carry heavy loads for thousands of hours in the most arduous conditions makes planetary roller screws suitable for the most demanding applications. The robust nut can withstand shock loads and the timing mechanism ensures reliability even in harsh environments and at high accelerations; the long lead and the symmetrical design of the nut permit high linear speeds.

Examples:
- Machine tools
- Injection moulding
- Factory automation process including spot welding, broaching, clamping, presses, guns, etc...
- Test benches
- Steel industry
- Tyre industry
- Automatic handling
- Military aircraft, tanks, rocket launchers, radar, ships and submarines
- Nuclear industry
- Transportation industry

Recirculating roller screws
(**fig. 19**)

Features
- Many strong contact points
- Very small leads (1 mm)
- No miniature parts

Benefits
- Long life: high load carrying capacity
- High positioning accuracy: fine resolution
- Exceptional reliability

Fig. 19



Grooved rollers are the basis of SV/PV recirculating roller screws (**fig. 20**).

Fig. 20

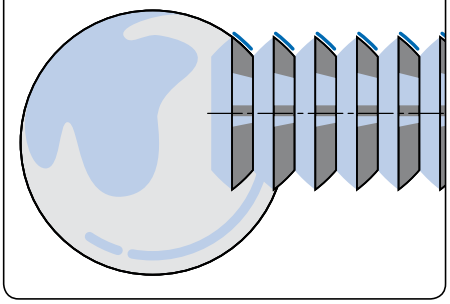

Typical applications

Ultimate positioning accuracy can be obtained using the fine lead of SV/BV/PV recirculating roller screws.
Their great mechanical advantage minimised input torque and increases resolution. They can simplify a complete transmission and improve its rigidity. They are often used in applications of advancing technology where reliable optimum performance is vital.

Examples:
- Grinding machines
- Laboratory equipment
- Hospital equipment
- Paper-making
- Printing industry
- Telescopes
- Satellites

Complete assemblies (fig. 21)

Selected roller screws, both planetary and recirculating, are available within reduced delivery times, with customised screw shafts from premachined stocked units: see **pages 138-139** for planetary and **150-161** for recirculating roller screws.

Fig. 21



Maximum speed

For screw assembly BRC + FLRBU or BVC + FLRBU, the maximum speed is defined by the product $n \times d_0$.

$n \times d_0$ < 160 000 for BRC
< 20 000 for BVC ∅ > 25
< 30 000 for BVC ∅ ≤ 25

(n = rotational speed
d_0 = outside diameter of screw shaft)

Service range

General rules

Delivery time	Delivery time from a couple of days to max. two weeks is possible for orders meeting the following conditions:
Quantity	• Max. 3 pieces for planetary and recirculating roller screw.
Materials	Both shafts and nuts should be made of standard steel (refer to our catalogue 4351). Neither stainless steel nor special treatments are accepted through this quick channel.
Capabilities	• Standard nuts (no special documents such as conformity report), with axial play, backlash elimination or preload. • Screw dimensions: see limitations on **page 138-139**. • Standard machining: no spline, no hollow shaft, no radius in grinding operations. If any such requirements, order cannot be accepted by the Service Channel. Unless specified, tolerances will be according to class 5, ISO 3408-3 (see catalogue 4351 - **page 24**). FLRBU thrust bearing units can be delivered for all sizes. • Lead precision: G5 to ISO standard. • Lubrication: screw assemblies delivered with machined ends are greased with SKF LGEP2 (temperature range: –20 °C to +120 °C); without end machining, they are only protected with rust inhibitor.
IMPORTANT	Screws for nuclear, aerospace, military or medical applications are excluded.

Planetary roller screws with bearing units

Delivery time

1 week Without end machining

2 weeks With machined ends

Nuts

With backlash elimination by oversize rollers: BRC

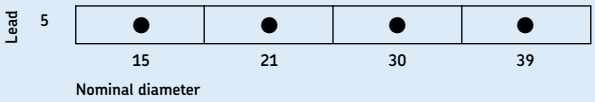

Capabilities

Machined ends:
- premachined shafts for machining by the customer
- to customer drawing (see general rules)
- suitable for FLRBU units.

Screw dimensions: see **page 138-139**

Delivery time

4 weeks With machined ends to customer drawing

Nuts

- With axial play: SRC-SRF
- With backlash elimination: TRU-TRK
- Preloaded: PRU-PRK for optimum rigidity

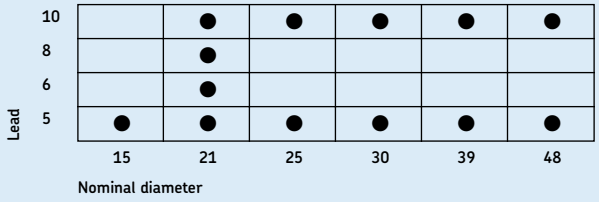

Capabilities

Machined ends:
- to customer drawing (see general rules)

Screw dimensions:
- up to 1 500 mm max. length
- up to 900 mm threaded length.

Recirculating roller screws with bearing units

Delivery time

1 week Without end machining

2 weeks With machined ends

Nuts

With backlash elimination by oversize rollers: BVC

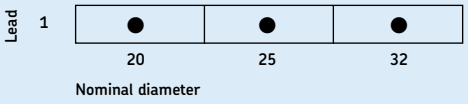

Capabilities

Machined ends:
- premachined shafts for machining by the customer
- to customer drawing (see general rules)
- suitable for FLRBU units.

Screw dimensions: see **page 150-151**

Delivery time

4 weeks With machined ends to customer drawing

Nuts

- With axial play: SVC
- Preloaded: PVU-PVK for optimum rigidity

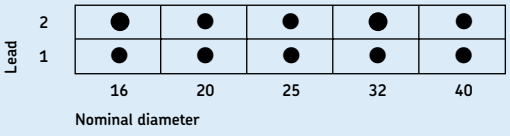

Capabilities

Machined ends:
- to customer drawing (see general rules)

Screw dimensions:
- up to 1 500 mm max. length
- up to 900 mm threaded length.

Notes

Ordering key



Play or preload:

Axial play (standard range)	S
Preload by rollers to eliminate backlash	B
Nut preloaded for backlash elimination	T
Nut preloaded for optimum rigidity	P

Product:

Planetary roller screw	R
Recirculating roller screw	V

Nut type:

Cylindrical nut with axial play	C
Nut with central flange and axial play	F
Preloaded cylindrical nut	U
Preloaded nut with central flange	K

Nominal diameter × lead (mm)

Hand:

Right	R
Left (on request)	L

Threaded length, total length (mm)

Lead precision:

G1 - G3 - G5

Nut orientation:
(this only applies to flanged nuts SRF, TRK, PRK, PVK)

For cylindrical nut	–
Shorter machined end, g6 side of nut towards	S
Longer machined end, g6 side of nut towards	L

Shaft ends:
To customer's drawing

Wipers:

Wipers in the nut: mounted for SR, delivered separately for SVC	WPR
Without wipers	NOWPR
Nut without wiper recesses (non standard SR only)	X

Example 1: S R F 39 × 20 R 425 / 590 G1 Z WPR

Example 2: S R F 39 × 20 R 425 / 590 G5 L Z NOWPR

Planetary roller screws

BRC - Range

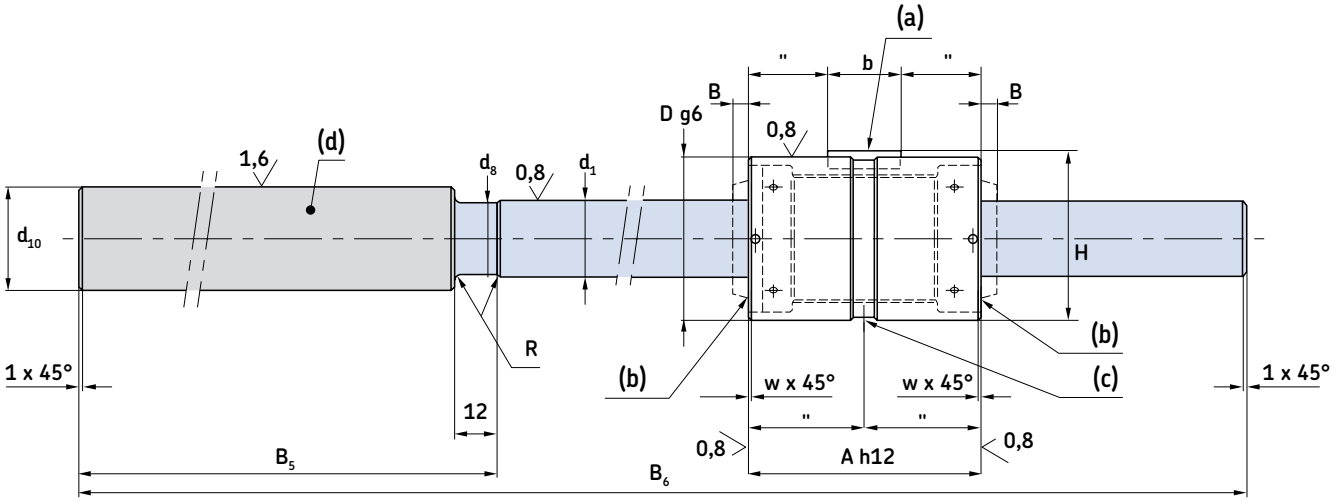

Legend:
(a) = key
(b) = wiper
(c) = lubrication Q
(d) = thrust bearing FLRBU*

Screw ends can be machined to customer requirements

Maximum threaded length: can be cut and machined to customer requirements

Planetary roller screws without end machining, lead precision G5 according to ISO standard.
Nut preloaded by rollers for backlash elimination.

Designations	Dimensions						Basic load ratings dynamic	static
	d_0	B_6	d_{10}	B_5	D	A	C_a	C_{oa}
	mm						kN	
BRC 15×5-R5	15	400	25	115	35	50	25,9	43,5
BRC 21×5-R5	21	570	40	178	45	64	50,5	81,9
BRC 30×5-R5	30	800	50	213	64	85	91,9	178,3
BRC 39×5-R5	39	1 046	70	259	80	100	129,2	268,9

N.B.:
Nut and thrust bearing unit cannot be modified. The standard version has the flange of the thrust bearing is located on the KMT side.

* Preload torque measured at 50 rpm with SKF LGEP2 as lubricant

Symbols, see **page 157**

FLRBU / BRC- Range

Planetary roller screw with thrust bearing unit

Legend:
(a) = Thrust bearing FLRBU*

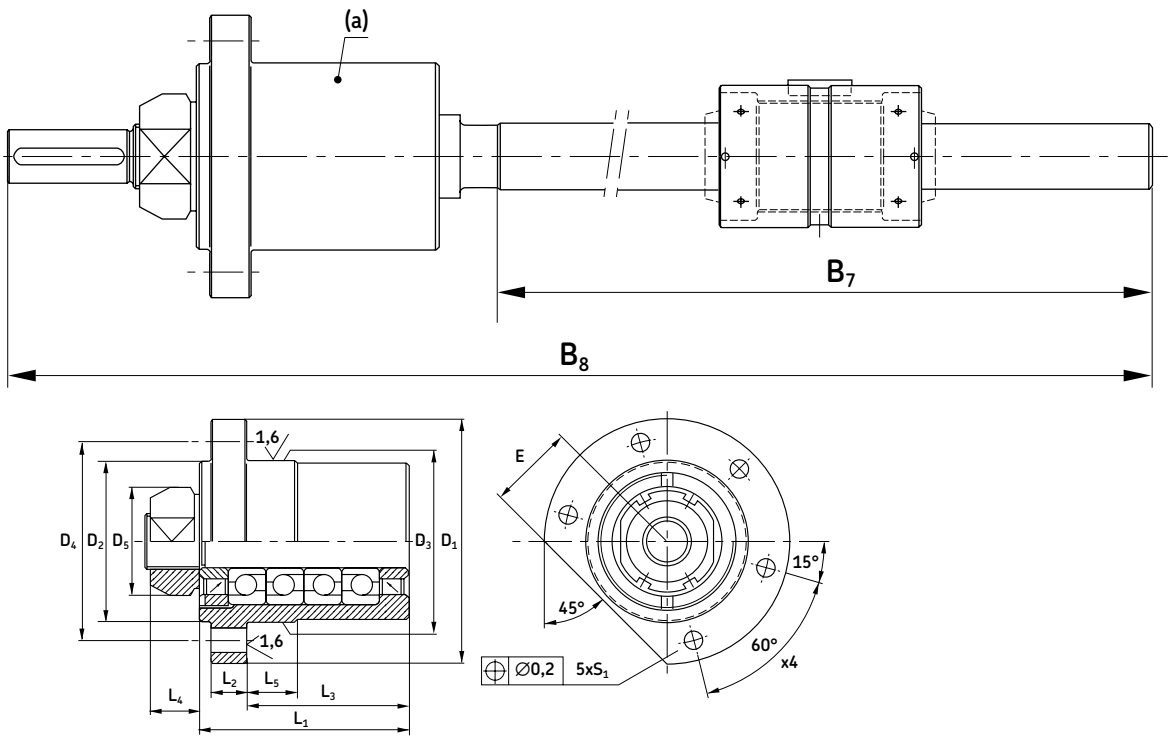

Designations	Dimensions										Basic load ratings dynamic	static
	d_0	B_7	B_8	L_1	L_2	L_3	D_1	D_3	D_4	E	C_a	C_{oa}
	mm										kN	
FLRBU2/BRC 15×5-R5	15	285	398	46	10	32	90	60	76	32	27,9	31,9
FLRBU4/BRC 21×5-R5	21	392	568	77	13	60	90	60	74	32	40,1	63,8
FLRBU5/BRC 30×5-R5	30	587	798	89	16	68	120	80	100	44	74,2	119,2
FLRBU6/BRC 39×5-R5	39	787	1 044	110	20	82	140	100	120	54	109,4	188,4

* Preload torque measured at 50 rpm with SKF LGEP2 as lubricant

Symbols, see **page 157**

SRC - Range

Cylindrical nut with axial play

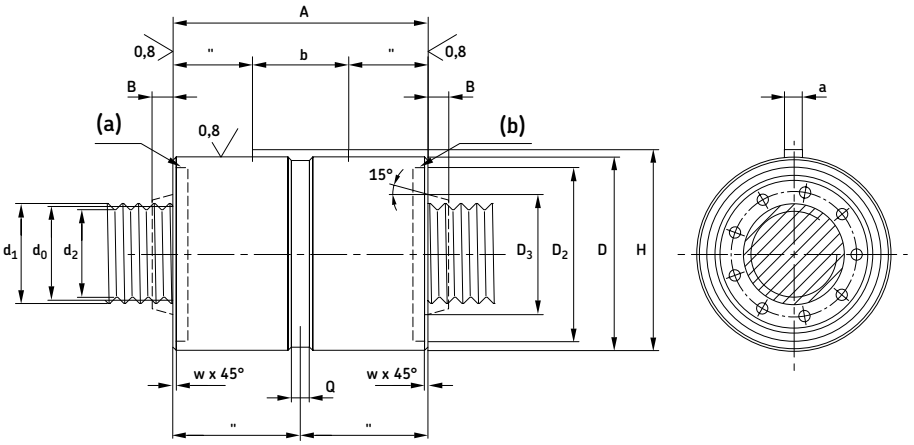

Legend:
(a) = wiper recess
(b) = wiper on request

Designations	Dimensions												Basic load ratings	
		Lead											dynamic	static
	d_0	P_h	l_{tp}	s_{ap}	d_1	d_2	D g6/H7	A h12	a h9	b	H	Q	C_a	C_{oa}
	mm												kN	
SRC 8×4	8	4	500	0,02	8,4	7,3	25	44	4	12	26,5	5	11,24	19,59
SRC 12×5	12	5	750	0,02	12,4	11,3	30	44	4	12	31,5	5	17,73	26,71
SRC 15×5	15	5	975	0,02	15,4	14,3	35	50	4	16	36,5	5	25,95	43,59
SRC 15×8	15	8	975	0,02	15,5	14	35	50	4	16	36,5	5	27,43	40,78
SRC 20×6	20	6	1 300	0,02	20,4	19,3	40	50	4	16	41,5	5	26,83	44,86
SRC 21×5	21	5	1 400	0,02	21,4	20,3	45	64	5	20	47	5	50,55	81,97
SRC 21×6	21	6	1 400	0,02	21,4	20,3	45	64	5	20	47	5	52,77	82,18
SRC 21×8	21	8	1 400	0,02	21,5	20	45	64	5	20	47	5	54,44	78,06
SRC 21×10	21	10	1 400	0,04	21,8	19,7	45	64	5	20	47	5	59,24	83,01
SRC 24×6	24	6	1 600	0,02	24,4	23,3	48	58	5	20	50	5	42,3	65,17
SRC 24×12	24	12	1 600	0,04	24,8	22,7	48	58	5	20	50	5	47,65	62,34
SRC 25×5	25	5	1 650	0,02	25,4	24,3	53	78	6	25	55,5	5	63,25	108,23
SRC 25×10	25	10	1 650	0,04	25,8	23,7	53	78	6	25	55,5	5	72,63	105,31
SRC 25×15	25	15	1 650	0,07	26,2	23,1	53	78	6	25	55,5	5	79,17	106,39
SRC 30×5	30	5	2 000	0,02	30,4	29,3	64	85	6	32	66,5	5	91,98	178,32
SRC 30×6	30	6	2 000	0,02	30,4	29,3	64	85	6	32	66,5	5	95	175,34
SRC 30×10	30	10	2 000	0,04	30,8	28,7	64	85	6	32	66,5	5	106,32	174,36
SRC 30×20	30	20	2 000	0,07	31,5	27,5	64	85	6	32	66,5	5	123,28	177,28
SRC 36×6	36	6	2 400	0,02	36,4	35,3	68	80	5	25	70	5	90,45	179,39
SRC 36×9	36	9	2 400	0,02	36,5	35,1	68	80	5	25	70	5	97,52	174,05
SRC 36×12	36	12	2 400	0,04	36,8	34,7	68	80	5	25	70	5	106,6	181,1
SRC 36×18	36	18	2 400	0,07	37,2	34,1	68	80	5	25	70	5	114,14	176,57
SRC 36×24	36	24	2 400	0,07	37,5	33,5	68	80	5	25	70	5	123,6	184,38
SRC 39×5	39	5	2 650	0,02	39,4	38,3	80	100	8	40	83	7	129,21	268,92
SRC 39×10	39	10	2 650	0,04	39,8	37,7	80	100	8	40	83	7	152,62	270,93
SRC 39×15	39	15	2 650	0,07	40,2	37,1	80	100	8	40	83	7	167,64	272,89
SRC 39×20	39	20	2 650	0,07	40,5	36,5	80	100	8	40	83	7	172,82	260,89
SRC 39×25	39	25	2 650	0,07	40,9	35,9	80	100	8	40	83	7	174,79	249
SRC 44×8	44	8	3 000	0,04	44,4	43,2	80	90	6	32	82,5	7	130,48	261,47
SRC 44×12	44	12	3 000	0,04	44,8	42,7	80	90	6	32	82,5	7	143,71	262,87
SRC 44×18	44	18	3 000	0,07	45,2	42,1	80	90	6	32	82,5	7	157,74	264,94
SRC 44×24	44	24	3 000	0,07	45,5	41,5	80	90	6	32	82,5	7	167,81	266,95
SRC 44×30	44	30	3 000	0,07	45,9	40,9	80	90	6	32	82,5	7	165,86	246,44

Continued

Symbols, see **page 157**

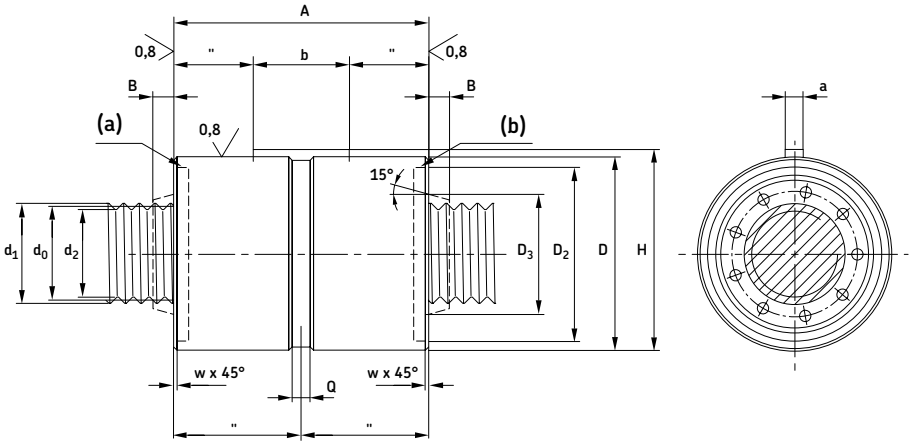

Legend:
(a) = wiper recess
(b) = wiper on request

Designations	Dimensions												Basic load ratings	
	Lead												dynamic	static
	d_0	P_h	l_{tp}	s_{ap}	d_1	d_2	D g6/H7	A h12	a h9	b	H	Q	C_a	C_{oa}
	mm												kN	
SRC 48×5	48	5	3 300	0,02	48,4	47,3	100	127	8	45	103	7	198,08	481,53
SRC 48×8	48	8	3 300	0,04	48,6	47,1	100	127	8	45	103	7	218,43	470,61
SRC 48×10	48	10	3 300	0,04	48,8	46,7	100	127	8	45	103	7	231,54	475,11
SRC 48×15	48	15	3 300	0,07	49,2	46,1	100	127	8	45	103	7	257,75	486,36
SRC 48×20	48	20	3 300	0,07	49,5	45,5	100	127	8	45	103	7	265,69	462,27
SRC 48×25	48	25	3 300	0,07	49,9	44,9	100	127	8	45	103	7	285,86	491,04
SRC 56×12	56	12	4 000	0,04	56,8	54,7	100	112	8	40	103	7	212,17	433,12
SRC 56×24	56	24	4 000	0,07	57,5	53,5	100	112	8	40	103	7	242,22	419,15
SRC 56×36	56	36	4 000	0,07	58,3	52,3	100	112	8	40	103	7	258,33	424,24
SRC 60×10	60	10	4 250	0,04	60,8	58,7	122	152	10	45	125	10,5	338,57	779,69
SRC 60×15	60	15	4 250	0,07	61,2	58,1	122	152	10	45	125	10,5	373,06	782,69
SRC 60×20	60	20	4 250	0,07	61,5	57,5	122	152	10	45	125	10,5	394,97	785,66
SRC 64×12	64	12	4 600	0,04	64,8	62,7	115	129	8	45	118	7	296,38	763,3
SRC 64×18	64	18	4 600	0,07	65,2	62,1	115	129	8	45	118	7	316,72	725,56
SRC 64×24	64	24	4 600	0,07	65,5	61,5	115	129	8	45	118	7	328,93	689,62
SRC 64×30	64	30	4 600	0,07	65,9	60,9	115	129	8	45	118	7	318,15	619,84
SRC 64×36	64	36	4 600	0,07	66,3	60,3	115	129	8	45	118	7	309,12	589,38
SRC 75×10	75	10	5 500	0,04	75,8	73,7	150	191	10	63	153	10,5	504,86	1 486,68
SRC 75×15	75	15	5 500	0,07	76,2	73,1	150	191	10	63	153	10,5	561,29	1 491,3
SRC 75×20	75	20	5 500	0,07	76,5	72,5	150	191	10	63	153	10,5	572,26	1 495,87
SRC 80×12	80	12	6 000	0,04	80,8	78,7	140	156	10	63	143	10,5	410,27	1 163,16
SRC 80×18	80	18	6 000	0,07	81,2	78,1	140	156	10	63	143	10,5	455,94	1 167,63
SRC 80×24	80	24	6 000	0,07	81,5	77,5	140	156	10	63	143	10,5	485,8	1 172,06
SRC 80×36	80	36	6 000	0,07	82,3	76,3	140	156	10	63	143	10,5	442,89	999,09
SRC 80×42	80	42	6 000	0,07	82,7	75,7	140	156	10	63	143	10,5	425,64	932,95
SRC 99×20	99	20	7 500	0,07	100,5	96,5	200	260	16	100	204	15	924,86	3 090,44
SRC 100×24	100	24	8 000	0,07	101,5	97,5	180	195	10	63	183	10,5	655,81	1 825,82
SRC 120×24	120	24	8 000	0,07	121,5	117,5	220	240	16	100	224	15	915,02	3 027,05
SRC 120×25	120	25	8 000	0,07	121,9	116,9	240	280	16	100	244	15	1 127,43	4 037,97
SRC 150×36	150	36	8 000	0,07	152,3	146,3	280	305	16	100	284	15	1 156,92	4 108,09
SRC 150×25	150	25	8 000	0,07	151,9	146,9	320	400	32	160	327	15	1 596,53	6 816,05
SRC 180×30	180	30	8 000	0,07	182,3	176,3	420	515	32	160	427	20	1 962,34	9 069,02
SRC 210×30	210	30	8 000	0,07	212,3	206,3	480	550	40	200	489	20	2 295,6	11 375,3

Symbols, see **page 157**

SRF - Range

Flanged nut with axial play

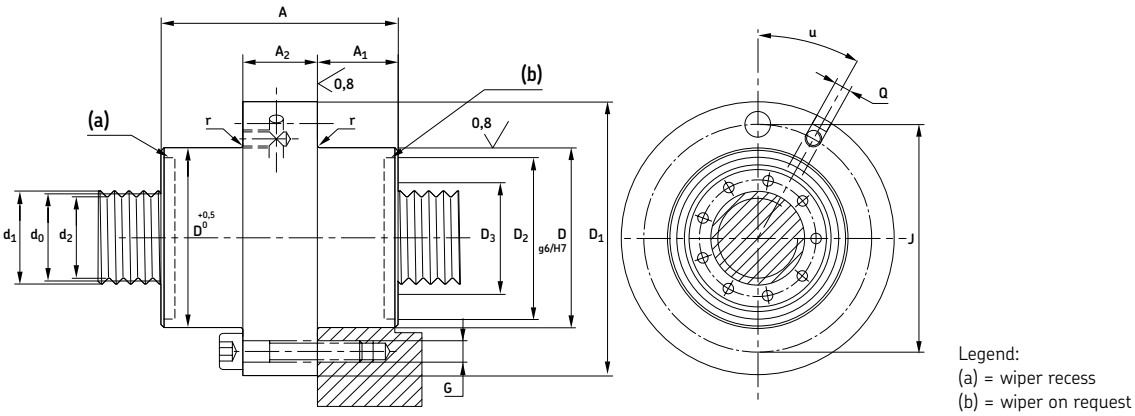

Legend:
(a) = wiper recess
(b) = wiper on request

Designations	Dimensions													Basic load ratings	
	Lead													dynamic	static
	d_0	P_h	l_{tp}	s_{ap}	d_1	d_2	D	A h12	D_1	J js12	G	Q	u	C_a	C_{oa}
	mm												[°]	kN	
SRF 8×4	8	4	500	0,02	8,4	7,3	25	44	46	36	6×M4	M6	30	11,24	19,59
SRF 12×5	12	5	750	0,02	12,4	11,3	30	44	51	41	6×M4	M6	30	17,73	26,71
SRF 15×5	15	5	975	0,02	15,4	14,3	35	50	58	46	6×M5	M6	30	25,95	43,59
SRF 15×8	15	8	975	0,02	15,5	14	35	50	58	46	6×M5	M6	30	27,43	40,78
SRF 20×6	20	6	1 300	0,02	20,4	19,3	40	50	63	51	6×M5	M6	30	26,83	44,86
SRF 21×5	21	5	1 400	0,02	21,4	20,3	45	64	68	56	6×M5	M6	30	50,55	81,97
SRF 21×6	21	6	1 400	0,02	21,4	20,3	45	64	68	56	6×M5	M6	30	52,77	82,18
SRF 21×8	21	8	1 400	0,02	21,5	20	45	64	68	56	6×M5	M6	30	54,44	78,06
SRF 21×10	21	10	1 400	0,04	21,8	19,7	45	64	68	56	6×M5	M6	30	59,24	83,01
SRF 24×6	24	6	1 600	0,02	24,4	23,3	48	58	71	59	6×M5	M6	30	42,3	65,17
SRF 24×12	24	12	1 600	0,04	24,8	22,7	48	58	71	59	6×M5	M6	30	47,65	62,34
SRF 25×5	25	5	1 650	0,02	25,4	24,3	56	78	84	70	6×M6	M6	30	63,25	108,23
SRF 25×10	25	10	1 650	0,04	25,8	23,7	56	78	84	70	6×M6	M6	30	72,63	105,31
SRF 25×15	25	15	1 650	0,07	26,2	23,1	56	78	84	70	6×M6	M6	30	79,17	106,39
SRF 30×5	30	5	2 000	0,02	30,4	29,3	64	85	97	81	6×M8	M6	30	91,98	178,32
SRF 30×6	30	6	2 000	0,02	30,4	29,3	64	85	97	81	6×M6	M6	30	95	175,34
SRF 30×10	30	10	2 000	0,04	30,8	28,7	64	85	97	81	6×M8	M6	30	106,32	174,36
SRF 30×20	30	20	2 000	0,07	31,5	27,5	64	85	97	81	6×M8	M6	30	123,28	177,28
SRF 36×6	36	6	2 400	0,02	36,4	35,3	68	80	102	85	6×M8	M6	30	90,45	179,39
SRF 36×9	36	9	2 400	0,02	36,5	35,1	68	80	102	85	6×M8	M6	30	97,52	174,05
SRF 36×12	36	12	2 400	0,04	36,8	34,7	68	80	102	85	6×M8	M6	30	106,6	181,1
SRF 36×18	36	18	2 400	0,07	37,2	34,1	68	80	102	85	6×M8	M6	30	114,14	176,57
SRF 36×24	36	24	2 400	0,07	37,5	33,5	68	80	102	85	6×M8	M6	30	123,6	184,38
SRF 39×5	39	5	2 650	0,02	39,4	38,3	82	100	124	102	6×M10	M6	30	129,21	268,92
SRF 39×10	39	10	2 650	0,04	39,8	37,7	82	100	124	102	6×M10	M6	30	152,62	270,93
SRF 39×15	39	15	2 650	0,07	40,2	37,1	82	100	124	102	6×M10	M6	30	167,64	272,89
SRF 39×20	39	20	2 650	0,07	40,5	36,5	82	100	124	102	6×M10	M6	30	172,82	260,89
SRF 39×25	39	25	2 650	0,07	40,9	35,9	82	100	124	102	6×M10	M6	30	174,79	249
SRF 44×8	44	8	3 000	0,04	44,4	43,2	82	90	124	102	6×M10	M6	30	130,48	261,47
SRF 44×12	44	12	3 000	0,04	44,8	42,7	82	90	124	102	6×M10	M6	30	143,71	262,87
SRF 44×18	44	18	3 000	0,07	45,2	42,1	82	90	124	102	6×M10	M6	30	157,74	264,94
SRF 44×24	44	24	3 000	0,07	45,5	41,5	82	90	124	102	6×M10	M6	30	167,81	266,95
SRF 44×30	44	30	3 000	0,07	45,9	40,9	82	90	124	102	6×M10	M6	30	165,86	246,44

Continued

Symbols, see **page 157**

SRF - Range
(*Continued*)

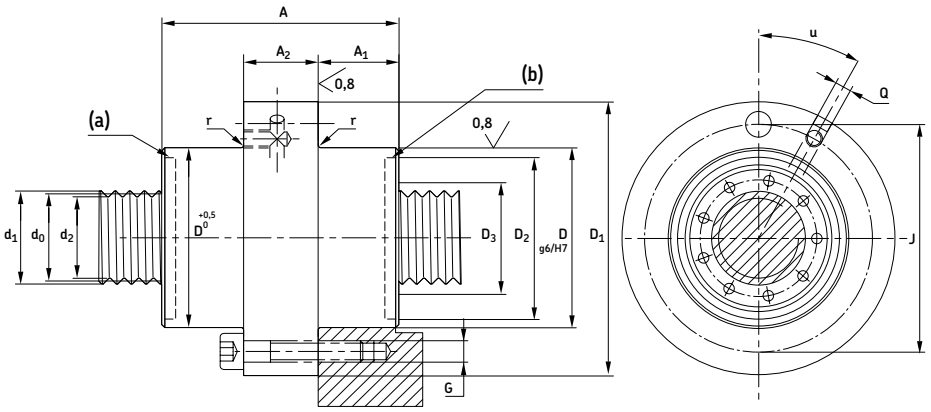

Legend:
(a) = wiper recess
(b) = wiper on request

Designations	Dimensions													Basic load ratings	
		Lead												dynamic	static
	d_0	P_h	l_{tp}	s_{ap}	d_1	d_2	D	A h12	D_1	J js12	G	Q	u	C_a	C_{oa}
	mm												[°]	kN	
SRF 48×5	48	5	3 300	0,02	48,4	47,3	105	127	150	127	6×M12	M8×1	30	198,08	481,53
SRF 48×8	48	8	3 300	0,04	48,6	47,1	105	127	150	127	6×M12	M8×1	30	218,43	470,61
SRF 48×10	48	10	3 300	0,04	48,8	46,7	105	127	150	127	6×M12	M8×1	30	231,54	475,11
SRF 48×15	48	15	3 300	0,07	49,2	46,1	105	127	150	127	6×M12	M8×1	30	257,75	486,36
SRF 48×20	48	20	3 300	0,07	49,5	45,5	105	127	150	127	6×M12	M8×1	30	265,69	462,27
SRF 48×25	48	25	3 300	0,07	49,9	44,9	105	127	150	127	6×M12	M8×1	30	285,86	491,04
SRF 56×12	56	12	4 000	0,04	56,8	54,7	105	112	150	127	6×M12	M8×1	30	212,17	433,12
SRF 56×24	56	24	4 000	0,07	57,5	53,5	105	112	150	127	6×M12	M8×1	30	242,22	419,15
SRF 56×36	56	36	4 000	0,07	58,3	52,3	105	112	150	127	6×M12	M8×1	30	258,33	424,24
SRF 60×10	60	10	4 250	0,04	60,8	58,7	122	152	180	150	6×M16	M8×1	30	338,57	779,69
SRF 60×15	60	15	4 250	0,07	61,2	58,1	122	152	180	150	6×M16	M8×1	30	373,06	782,69
SRF 60×20	60	20	4 250	0,07	61,5	57,5	122	152	180	150	6×M16	M8×1	30	394,97	785,66
SRF 64×12	64	12	4 600	0,04	64,8	62,7	120	129	180	150	6×M16	M8×1	30	296,38	763,3
SRF 64×18	64	18	4 600	0,07	65,2	62,1	120	129	180	150	6×M16	M8×1	30	316,72	725,56
SRF 64×24	64	24	4 600	0,07	65,5	61,5	120	129	180	150	6×M16	M8×1	30	328,93	689,62
SRF 64×30	64	30	4 600	0,07	65,9	60,9	120	129	180	150	6×M16	M8×1	30	318,15	619,84
SRF 64×36	64	36	4 600	0,07	66,3	60,3	120	129	180	150	6×M16	M8×1	30	309,12	589,38
SRF 75×10	75	10	5 500	0,04	75,8	73,7	150	191	210	180	8×M16	M8×1	22°30	504,86	1 486,68
SRF 75×15	75	15	5 500	0,07	76,2	73,1	150	191	210	180	8×M16	M8×1	22°30	561,29	1 491,3
SRF 75×20	75	20	5 500	0,07	76,5	72,5	150	191	210	180	8×M16	M8×1	22°30	572,26	1 495,87
SRF 80×12	80	12	6 000	0,04	80,8	78,7	150	156	210	180	8×M16	M8×1	22°30	410,27	1 163,16
SRF 80×18	80	18	6 000	0,07	81,2	78,1	150	156	210	180	8×M16	M8×1	22°30	455,94	1 167,63
SRF 80×24	80	24	6 000	0,07	81,5	77,5	150	156	210	180	8×M16	M8×1	22°30	485,8	1 172,06
SRF 80×36	80	36	6 000	0,07	82,3	76,3	150	156	210	180	8×M16	M8×1	22°30	442,89	999,09
SRF 80×42	80	42	6 000	0,07	82,7	75,7	150	156	210	180	8×M16	M8×1	22°30	425,64	932,95
SRF 99×20	99	20	7 500	0,07	100,5	96,5	200	260	275	245	12×M16	M8×1	15	924,86	3 090,44
SRF 100×24	100	24	8 000	0,07	101,5	97,5	180	195	255	220	12×M16	M8×1	15	655,81	1 825,82
SRF 120×24	120	24	8 000	0,07	121,5	117,5	220	240	295	260	12×M16	M8×1	15	915,02	3 027,05
SRF 120×25	120	25	8 000	0,07	121,9	116,9	260	280	340	305	12×M16	M12	15	1 127,43	4 037,97
SRF 150×36	150	36	8 000	0,07	152,3	146,3	280	305			Consult SKF			1 156,92	4 108,09
SRF 150×25	150	25	8 000	0,07	151,9	146,9	320	400			Consult SKF			1 596,53	6 816,05
SRF 180×30	180	30	8 000	0,07	182,3	176,3	420	515			Consult SKF			1 962,34	9 069,02
SRF 210×30	210	30	8 000	0,07	212,3	206,3	480	550			Consult SKF			2 295,6	11 375,3

Symbols, see **page 157**

TRU/PRU - Range

Cylindrical nut with backlash elimination (TRU)
or preloaded for optimum rigidity (PRU)

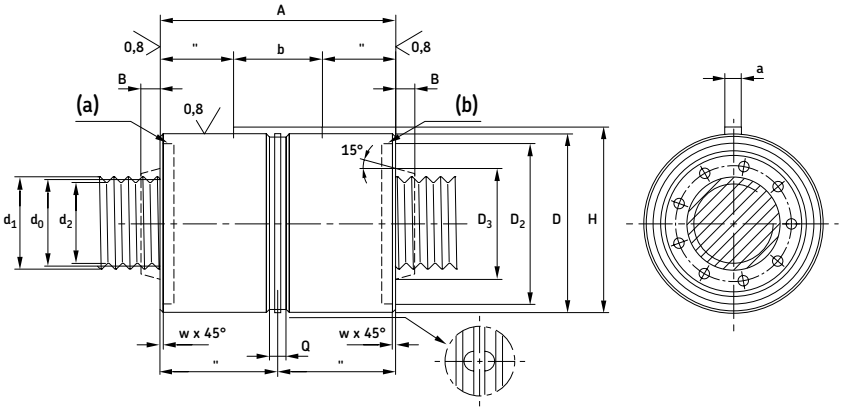

Legend:
(a) = wiper recess
(b) = wiper on request

Designations	Dimensions											Basic load ratings		Preload torque	
	Lead											dynamic	static		
	d_0	P_h	l_{tp}	d_1	d_2	D g6/H7	A h12	a h9	b	H	Q	C_a	C_{oa}	T_{pe}	T_{pr}
	mm											kN		Nm	
TRU 8×4	8	4	400	8,4	7,3	25	44	4	12	26,5	5	6,19	9,79	0,07	
PRU 8×4	8	4	400	8,4	7,3	25	44	4	12	26,5	5	6,19	9,79		0,06-0,13
TRU 12×5	12	5	600	12,4	13,3	30	44	4	12	31,5	5	9,77	13,36	0,13	
PRU 12×5	12	5	600	12,4	11,3	30	44	4	12	31,5	5	9,77	13,36		0,12-0,25
TRU 15×5	15	5	750	15,4	14,3	35	50	4	16	36,5	5	14,3	21,8	0,19	
PRU 15×5	15	5	750	15,4	14,3	35	50	4	16	36,5	5	14,3	21,8		0,18-0,36
TRU 15×8	15	8	750	15,5	14	35	50	4	16	36,5	5	15,11	20,39	0,19	
PRU 15×8	15	8	750	15,5	14	35	50	4	16	36,5	5	15,11	20,39		0,18-0,36
TRU 20×6	20	6	1 050	20,4	19,3	40	50	4	16	41,5	5	14,78	22,43	0,3	
PRU 20×6	20	6	1 050	20,4	19,3	40	50	4	16	41,5	5	14,78	22,43		0,26-0,58
TRU 21×5	21	5	1 100	21,4	20,3	45	64	5	20	47	5	27,85	40,98	0,33	
PRU 21×5	21	5	1 100	21,4	20,3	45	64	5	20	47	5	27,85	40,98		0,31-0,63
TRU 21×6	21	6	1 100	21,4	20,3	45	64	5	20	47	5	29,08	41,09	0,33	
PRU 21×6	21	6	1 100	21,4	20,3	45	64	5	20	47	5	29,08	41,09		0,31-0,63
TRU 21×8	21	8	1 100	21,5	20	45	64	5	20	47	5	30	39,03	0,33	
PRU 21×8	21	8	1 100	21,5	20	45	64	5	20	47	5	30	39,03		0,31-0,63
TRU 21×10	21	10	110	21,8	19,7	45	64	5	20	47	5	32,64	41,51	0,33	
PRU 21×10	21	10	110	21,8	19,7	45	64	5	20	47	5	32,64	41,51		0,31-0,63
TRU 24×6	24	6	1 250	24,4	23,3	48	58	5	20	50	5	23,31	32,59	0,41	
PRU 24×6	24	6	1 250	24,4	23,3	48	58	5	20	50	5	23,31	32,59		0,39-0,78
TRU 24×12	24	12	1 250	24,8	22,7	48	58	5	20	50	5	26,25	31,17	0,41	
PRU 24×12	24	12	1 250	24,8	22,7	48	58	5	20	50	5	26,25	31,17		0,39-0,78
TRU 25×5	25	5	1 300	25,4	24,3	53	78	6	25	55,5	5	34,85	54,12	0,44	
PRU 25×5	25	5	1 300	25,4	24,3	53	78	6	25	55,5	5	34,85	54,12		0,42-0,84
TRU 25×10	25	10	1 300	25,8	23,7	53	78	6	25	55,5	5	40,02	52,65	0,44	
PRU 25×10	25	10	1 300	25,8	23,7	53	78	6	25	55,5	5	40,02	52,65		0,42-0,84
TRU 25×15	25	15	1 300	26,2	23,1	53	78	6	25	55,5	5	43,62	53,2	0,44	
PRU 25×15	25	15	1 300	26,2	23,1	53	78	6	25	55,5	5	43,62	53,2		0,42-0,84
TRU 30×5	30	5	1 600	30,4	29,3	64	85	6	32	66,5	5	50,68	89,16	0,59	
PRU 30×5	30	5	1 600	30,4	29,3	64	85	6	32	66,5	5	50,68	89,16		0,57-1,13
TRU 30×6	30	6	1 600	30,4	29,3	64	85	6	32	66,5	5	52,34	87,67	0,59	
PRU 30×6	30	6	1 600	30,4	29,3	64	85	6	32	66,5	5	52,34	87,67		0,57-1,13
TRU 30×10	30	10	1 600	30,8	28,7	64	85	6	32	66,5	5	58,58	87,18	0,59	
PRU 30×10	30	10	1 600	30,8	28,7	64	85	6	32	66,5	5	58,58	87,18		0,57-1,13
TRU 30×20	30	20	1 600	31,5	27,5	64	85	6	32	66,5	5	67,92	88,64	0,59	
PRU 30×20	30	20	1 600	31,5	27,5	64	85	6	32	66,5	5	67,92	88,64		0,85-1,41

Continued

Symbols, see **page 157**

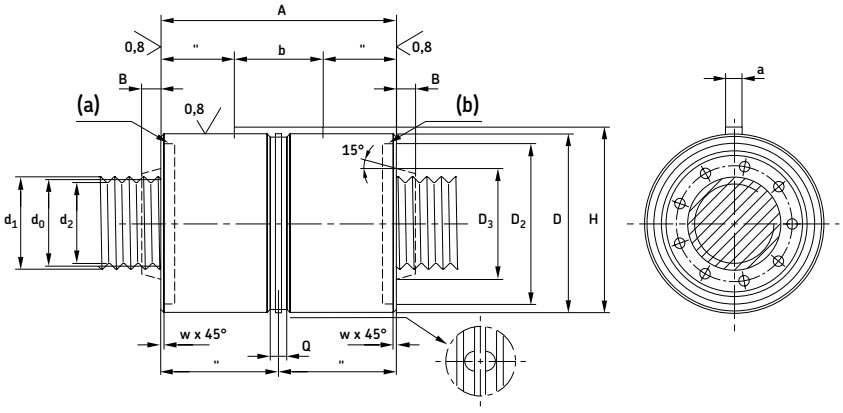

Legend:
(a) = wiper recess
(b) = wiper on request

Designations	Dimensions											Basic load ratings		Preload torque	
	Lead											dynamic	static		
	d_0	P_h	l_{tp}	d_1	d_2	D g6/H7	A h12	a h9	b	H	Q	C_a	C_{oa}	T_{pe}	T_{pr}
	mm											kN		Nm	
TRU 36×6	36	6	1 900	36,4	35,3	68	80	5	25	70	5	49,83	89,69	0,8	
PRU 36×6	36	6	1 900	36,4	35,3	68	80	5	25	70	5	49,83	89,69		0,77-1,53
TRU 36×9	36	9	1 900	36,5	35,1	68	80	5	25	70	5	53,73	87,03	0,8	
PRU 36×9	36	9	1 900	36,5	35,1	68	80	5	25	70	5	53,73	87,03		0,77-1,53
TRU 36×12	36	12	1 900	36,8	34,7	68	80	5	25	70	5	58,73	90,55	0,8	
PRU 36×12	36	12	1 900	36,8	34,7	68	80	5	25	70	5	58,73	90,55		0,77-1,53
TRU 36×18	36	18	1 900	37,2	34,1	18	80	5	25	70	5	62,89	88,29	0,8	
PRU 36×18	36	18	1 900	37,2	34,1	68	80	5	25	70	5	62,89	88,29		0,77-1,53
TRU 36×24	36	24	1 900	37,5	33,5	68	80	5	25	70	5	68,1	92,19	0,8	
PRU 36×24	36	24	1 900	37,5	33,5	68	80	5	25	70	5	68,1	92,19		1,15-1,91
TRU 39×5	39	5	2 100	39,4	38,3	80	100	8	40	83	7	71,19	134,46	0,92	
PRU 39×5	39	5	2 100	39,4	38,3	80	100	8	40	83	7	71,19	134,46		0,88-1,75
TRU 39×10	39	10	2 100	39,8	37,7	80	10	8	40	83	7	84,09	135,46	0,92	
PRU 39×10	39	10	2 100	39,8	37,7	80	10	8	40	83	7	84,09	135,46		0,88-1,75
TRU 39×15	39	15	2 100	40,2	37,1	80	100	8	40	83	7	92,36	136,45	0,92	
PRU 39×15	39	15	2 100	40,2	37,1	80	100	8	40	83	7	92,36	136,45		0,88-1,75
TRU 39×20	39	20	2 100	40,5	36,5	80	100	8	40	83	7	95,22	130,45	0,92	
PRU 39×20	39	20	2 100	40,5	36,5	80	100	8	40	83	7	95,22	130,45		0,88-1,75
TRU 39×25	39	25	2 100	40,9	35,9	80	100	8	40	83	7	96,3	124,5	0,92	
PRU 39×25	39	25	2 100	40,9	35,9	80	100	8	40	83	7	96,3	124,5		1,31-2,19
TRU 44×8	44	8	2 400	44,4	43,2	80	90	6	32	82,5	7	71,89	130,73	1,12	
PRU 44×8	44	8	2 400	44,4	43,2	80	90	6	32	82,5	7	71,89	130,73		1,07-2,14
TRU 44×12	44	12	2 400	44,8	42,7	80	90	6	32	82,5	7	79,18	131,44	1,12	
PRU 44×12	44	12	2 400	44,8	42,7	80	90	6	32	82,5	7	79,18	131,44		1,07-2,14
TRU 44×18	44	18	2 400	45,2	42,1	80	90	6	32	82,5	7	86,91	132,47	1,12	
PRU 44×18	44	18	2 400	45,2	42,1	80	90	6	32	82,5	7	86,91	132,47		1,07-2,14
TRU 44×24	44	24	2 400	45,5	41,5	80	90	6	32	82,5	7	92,46	133,48	1,12	
PRU 44×24	44	24	2 400	45,5	41,5	80	90	6	32	82,5	7	92,46	133,48		1,07-21,4
TRU 44×30	44	30	2 400	45,9	40,9	80	90	6	32	82,5	7	91,38	123,22	1,12	
PRU 44×30	44	30	2 400	45,9	40,9	80	90	6	32	82,5	7	91,38	123,22		1,60-2,68

Continued

Symbols, see **page 157**

TRU/PRU - Range
(*Continued*)

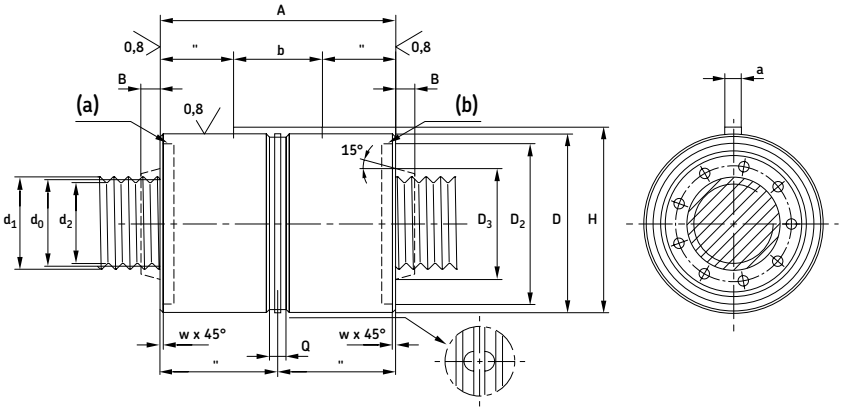

Legend:
(a) = wiper recess
(b) = wiper on request

Designations	Dimensions											Basic load ratings		Preload torque	
	Lead											dynamic	static		
	d_0	P_h	l_{tp}	d_1	d_2	D g6/H7	A h12	a h9	b	H	Q	C_a	C_{oa}	T_{pe}	T_{pr}
	mm											kN		Nm	
TRU 48×5	48	5	2 600	48,4	47,3	100	127	8	45	103	7	109,13	240,77	1,3	
PRU 48×5	48	5	2 600	48,4	47,3	100	127	8	45	103	7	109,13	240,77		1,24-2,47
TRU 48×8	48	8	2 600	48,6	47,1	100	127	8	45	103	7	120,34	235,3	1,3	
PRU 48×8	48	8	2 600	48,6	47,1	100	127	8	45	103	7	120,34	235,3		1,24-2,47
TRU 48×10	48	10	2 600	48,8	46,7	100	127	8	45	103	7	127,57	237,56	1,3	
PRU 48×10	48	10	2 600	48,8	46,7	100	127	8	45	103	7	127,57	237,56		1,24-2,47
TRU 48×15	48	15	2 600	49,2	46,1	103	127	8	45	103	7	142,01	243,18	1,3	
PRU 48×15	48	15	2 600	49,2	46,1	100	127	8	45	103	7	142,01	243,18		1,24-2,47
TRU 48×20	48	20	2 600	49,5	45,5	100	127	8	45	103	7	146,38	231,14	1,3	
PRU 48×20	48	20	2 600	49,5	45,5	100	127	8	45	103	7	146,38	231,14		1,24-2,47
TRU 48×25	48	25	2 600	49,9	44,9	100	127	8	45	103	7	157,5	245,52	1,3	
PRU 48×25	48	25	2 600	49,9	44,9	100	127	8	45	103	7	157,5	245,52		1,24-2,47
TRU 56×12	56	12	3 100	56,8	54,7	100	112	8	40	103	7	116,9	216,56	1,68	
PRU 56×12	56	12	3 100	56,8	54,7	100	112	8	40	103	7	116,9	216,56		1,60-3,19
TRU 56×24	56	24	3 100	57,5	53,5	100	112	8	40	103	7	133,45	209,58	1,68	
PRU 56×24	56	24	3 100	57,5	53,5	100	112	8	40	103	7	133,45	209,58		1,60-3,19
TRU 56×36	56	36	3 100	58,3	52,3	100	112	8	40	103	7	142,33	212,12	1,68	
PRU 56×36	56	36	3 100	58,3	52,3	100	0,12	8	40	103	7	142,33	212,12		2,39-3,99
TRU 60×10	60	10	3 400	60,8	58,7	122	152	10	45	125	10,5	186,53	389,85	1,88	
PRU 60×10	60	10	3 400	60,8	58,7	122	152	10	45	125	10,5	186,53	389,85		1,79-3,58
TRU 60×15	60	15	3 400	61,2	58,1	122	152	10	45	125	10,5	205,54	391,35	1,88	
PRU 60×15	60	15	3 400	61,2	58,1	122	152	10	45	125	10,5	205,54	391,35		1,79-3,58
TRU 60×20	60	20	3 400	61,5	57,5	122	152	10	45	125	10,5	217,61	392,83	1,88	
PRU 60×20	60	20	3 400	61,5	57,5	122	152	10	45	125	10,5	217,61	392,83		1,79-3,58
TRU 64×12	64	12	3 650	64,8	62,7	115	129	8	45	118	7	165,57	381,65	2,09	
PRU 64×12	64	12	3 650	64,8	62,7	115	129	8	45	118	7	165,57	381,65		1,99-3,98
TRU 64×18	64	18	3 650	65,2	62,1	115	129	8	45	118	7	176,93	362,78	2,09	
PRU 64×18	64	18	3 650	65,2	62,1	115	129	8	45	118	7	176,93	362,78		1,99-3,98
TRU 64×24	64	24	3 650	65,5	61,5	115	129	8	45	118	7	183,76	344,81	2,09	
PRU 64×24	64	24	3 650	65,5	61,5	115	129	8	45	118	7	183,76	344,81		1,99-3,98
TRU 64×30	64	30	3 650	65,9	60,9	115	129	8	45	118	7	177,73	309,92	2,09	
PRU 64×30	64	30	3 650	65,9	60,9	115	129	8	45	118	7	177,73	309,92		1,99-3,98
TRU 64×36	64	36	3 650	66,3	60,3	115	129	8	45	118	7	172,69	294,69	2,09	
PRU 64×36	64	36	3 650	66,3	60,3	115	129	8	45	118	7	172,69	294,69		1,99-3,98

Symbols, see **page 157**

TRK/PRK - Range

Flanged nut with backlash elimination (TRK)
or preloaded for optimum rigidity (PRK)

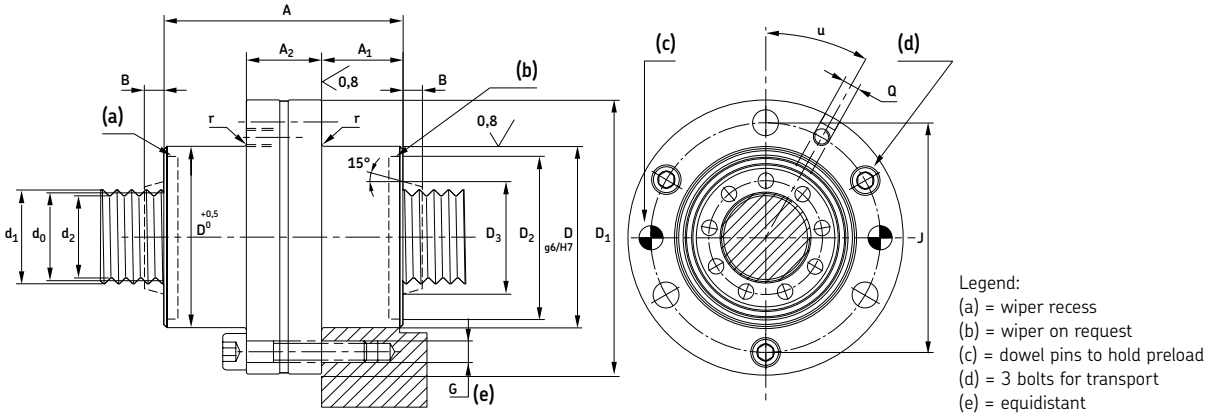

Legend:
(a) = wiper recess
(b) = wiper on request
(c) = dowel pins to hold preload
(d) = 3 bolts for transport
(e) = equidistant

Designations	Dimensions												Basic load ratings		Preload torque	
	Lead												dynamic	static		
	d_0	P_h	l_{tp}	d_1	d_2	D	A h12	D_1	J js12	G	Q	u	C_a	C_{oa}	T_{pe}	T_{pr}
	mm											[°]	kN		Nm	
TRK 8×4	8	4	400	8,4	7,3	25	44	46	36	6×M4	M6	30	6,19	9,79	0,07	
PRK 8×4	8	4	400	8,4	7,3	25	44	46	36	6×M4	M6	30	6,19	9,79		0,06-0,13
TRK 12×5	12	5	600	12,4	11,3	30	44	51	41	6×M4	M6	30	9,77	13,36	0,13	
PRK 12×5	12	5	600	12,4	11,3	30	44	51	41	6×M4	M6	30	9,77	13,36		0,12-0,25
TRK 15×5	15	5	750	15,4	14,3	35	50	58	46	6×M5	M6	30	14,3	21,8	0,19	
PRK 15×5	15	5	750	15,4	14,3	35	50	58	46	6×M5	M6	30	14,3	21,8		0,18-0,36
TRK 15×8	15	8	750	15,5	14	35	50	58	46	6×M5	M6	30	15,11	20,39	0,19	
PRK 15×8	15	8	750	15,5	14	35	50	58	46	6×M5	M6	30	15,11	20,39		0,18-0,36
TRK 20×6	20	6	1 050	20,4	19,3	40	50	63	51	6×M5	M6	30	14,78	22,43	0,3	
PRK 20×6	20	6	1 050	20,4	19,3	40	50	63	51	6×M5	M6	30	14,78	22,43		0,26-0,58
TRK 21×5	21	5	1 100	21	20,3	45	64	68	56	6×M5	M6	30	27,85	40,98	0,33	
PRK 21×5	21	5	1 100	21	20,3	45	64	68	56	6×M5	M6	30	27,85	40,98		0,31-0,63
TRK 21×6	21	6	1 100	21	20,3	45	64	68	56	6×M5	M6	30	29,08	41,09	0,33	
PRK 21×6	21	6	1 100	21	20,3	45	64	68	56	6×M5	M6	30	29,08	41,09		0,31-0,63
TRK 21×8	21	8	1 100	21	20	45	64	68	56	6×M5	M6	30	30	39,03	0,33	
PRK 21×8	21	8	1 100	21	20	45	64	68	56	6×M5	M6	30	30	39,03		0,31-0,63
TRK 21×10	21	10	1 100	21,8	19,7	45	64	68	56	6×M5	M6	30	32,64	41,51	0,33	
PRK 21×10	21	10	1 100	21,8	19,7	45	64	68	56	6×M5	M6	30	32,64	41,51		0,31-0,63
TRK 24×6	24	6	1 250	24,4	23,3	48	58	71	59	6×M5	M6	30	23,31	32,59	0,41	
PRK 24×6	24	6	1 250	24,4	23,3	48	58	71	59	6×M5	M6	30	23,31	32,59		0,39-0,78
TRK 24×12	24	12	1 250	24,8	22,7	48	58	71	59	6×M5	M6	30	26,25	31,17	0,41	
PRK 24×12	24	12	1 250	24,8	22,7	48	58	71	59	6×M5	M6	30	26,25	31,17		0,39-0,78
TRK 25×5	25	5	1 300	25,4	24,3	56	78	84	70	6×M6	M6	30	34,85	54,12	0,44	
PRK 25×5	25	5	1 300	25,4	24,3	56	78	84	70	6×M6	M6	30	34,85	54,12		0,42-0,84
TRK 25×10	25	10	1 300	25,8	23,7	56	78	84	70	6×M6	M6	30	40,02	52,65	0,44	
PRK 25×10	25	10	1 300	25,8	23,7	56	78	84	70	6×M6	M6	30	40,02	52,65		0,42-0,84
TRK 25×15	25	15	1 300	26,2	23,1	56	78	84	70	6×M6	M6	30	43,62	53,2	0,44	
PRK 25×15	25	15	1 300	26,2	23,1	56	78	84	70	6×M6	M6	30	43,62	53,2		0,42-0,84
TRK 30×5	30	5	1 600	30,8	29,3	64	85	98	81	6×M8	M6	30	50,68	89,16	0,59	
PRK 30×5	30	5	1 600	30,8	29,3	64	85	98	81	6×M8	M6	30	50,68	89,16		0,57-1,13
TRK 30×6	30	6	1 600	30,4	29,3	64	85	98	81	6×M8	M6	30	52,34	87,67	0,59	
PRK 30×6	30	6	1 600	30,4	29,3	64	85	98	81	6×M8	M6	30	52,34	87,67		0,57-1,13
TRK 30×10	30	10	1 600	31,8	28,7	64	85	98	81	6×M8	M6	30	58,58	87,18	0,59	
PRK 30×10	30	10	1 600	31,8	28,7	64	85	98	81	6×M8	M6	30	58,58	87,18		0,57-1,13
TRK 30×20	30	20	1 600	31,5	27,5	64	85	98	81	6×M8	M6	30	67,92	88,64	0,59	
PRK 30×20	30	20	1 600	31,5	27,5	64	85	98	81	6×M8	M6	30	67,92	88,64		0,85-1,41

Continued

Symbols, see **page 157**

TRK/PRK - Range
(*Continued*)

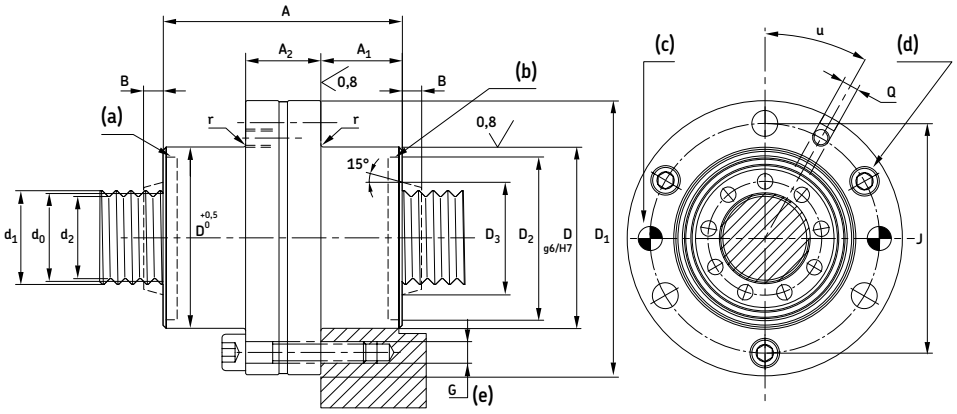

Legend:
(a) = wiper recess
(b) = wiper on request
(c) = dowel pins to hold preload
(d) = 3 bolts for transport
(e) = equidistant

Designations	Dimensions Lead												Basic load ratings dynamic	static	Preload torque	
	d_0	P_h	l_{tp}	d_1	d_2	D	A h12	D_1	J js12	G	Q	u	C_a	C_{oa}	T_{pe}	T_{pr}
	mm											[°]	kN		Nm	
TRK 36×6	36	6	1 900	36,4	35,3	68	80	102	85	6×M8	M6	30	49,83	89,69	0,8	
PRK 36×6	36	6	1 900	36,4	35,3	68	80	102	85	6×M8	M6	30	49,83	89,69		0,77-1,53
TRK 36×9	36	9	1 900	36,5	35,1	68	80	102	85	6×M8	M6	30	53,73	87,03	0,8	
PRK 36×9	36	9	1 900	36,5	35,1	68	80	102	85	6×M8	M6	30	53,73	87,03		0,77-1,53
TRK 36×12	36	12	1 900	36,8	34,7	68	80	102	85	6×M8	M6	30	58,73	90,55	0,8	
PRK 36×12	36	12	1 900	36,8	34,7	68	80	102	85	6×M8	M6	30	58,73	90,55		0,77-1,53
TRK 36×18	36	18	1 900	37,2	34,1	68	80	102	85	6×M8	M6	30	62,89	88,29	0,8	
PRK 36×18	36	18	1 900	37,2	34,1	68	80	102	85	6×M8	M6	30	62,89	88,29		0,77-1,53
TRK 36×24	36	24	1 900	37,5	33,5	68	80	102	85	6×M8	M6	30	68,1	92,19	0,8	
PRK 36×24	36	24	1 900	37,5	33,5	68	80	102	85	6×M8	M6	30	68,1	92,19		1,15-1,91
TRK 39×5	39	5	2 100	39,4	38,3	82	100	124	102	6×M10	M6	30	71,19	134,46	0,92	
PRK 39×5	39	5	2 100	39,4	38,3	82	100	124	102	6×M10	M6	30	71,19	134,46		0,88-1,75
TRK 39×10	39	10	2 100	39,8	37,7	82	100	124	102	6×M10	M6	30	84,09	135,46	0,92	
PRK 39×10	39	10	2 100	39,8	37,7	82	100	124	102	6×M10	M6	30	84,09	135,46		0,88-1,75
TRK 39×15	39	15	2 100	40,2	37,1	82	100	124	102	6×M10	M6	30	92,36	136,45	0,92	
PRK 39×15	39	15	2 100	40,2	37,1	82	100	124	102	6×M10	M6	30	92,36	136,45		0,88-1,75
TRK 39×20	39	20	2 100	40,5	36,5	82	100	124	102	6×M10	M6	30	95,22	130,45	0,92	
PRK 39×20	39	20	2 100	40,5	36,5	82	100	124	102	6×M10	M6	30	95,22	130,45		0,88-1,75
TRK 39×25	39	25	2 100	40,9	35,9	82	100	124	102	6×M10	M6	30	96,3	124,5	0,92	
PRK 39×25	39	25	2 100	40,9	35,9	82	100	124	102	6×M10	M6	30	96,3	124,5		1,31-2,19
TRK 44×8	44	8	2 400	44,4	43,2	82	90	124	102	6×M10	M6	30	71,89	130,73	1,12	
PRK 44×8	44	8	2 400	44,4	43,2	82	90	124	102	6×M10	M6	30	71,89	130,73		1,07-2,14
TRK 44×12	44	12	2 400	44,8	42,7	82	90	124	102	6×M10	M6	30	79,18	131,44	1,12	
PRK 44×12	44	12	2 400	44,8	42,7	82	90	124	102	6×M10	M6	30	79,18	131,44		1,07-2,14
TRK 44×18	44	18	2 400	45,2	42,1	82	90	124	102	6×M10	M6	30	86,91	132,47	1,12	
PRK 44×18	44	18	2 400	45,2	42,1	82	90	124	102	6×M10	M6	30	86,91	132,47		1,07-2,14
TRK 44×24	44	24	2 400	45,5	41,5	82	90	124	102	6×M10	M6	30	92,46	133,48	1,12	
PRK 44×24	44	24	2 400	45,5	41,5	82	90	124	102	6×M10	M6	30	92,46	133,48		1,07-2,14
TRK 44×30	44	30	2 400	45,9	40,9	82	90	124	102	6×M10	M6	30	91,38	123,22	1,12	
PRK 44×30	44	30	2 400	45,9	40,9	82	90	124	102	6×M10	M6	30	91,38	123,22		1,60-2,68

Continued

Symbols, see **page 157**

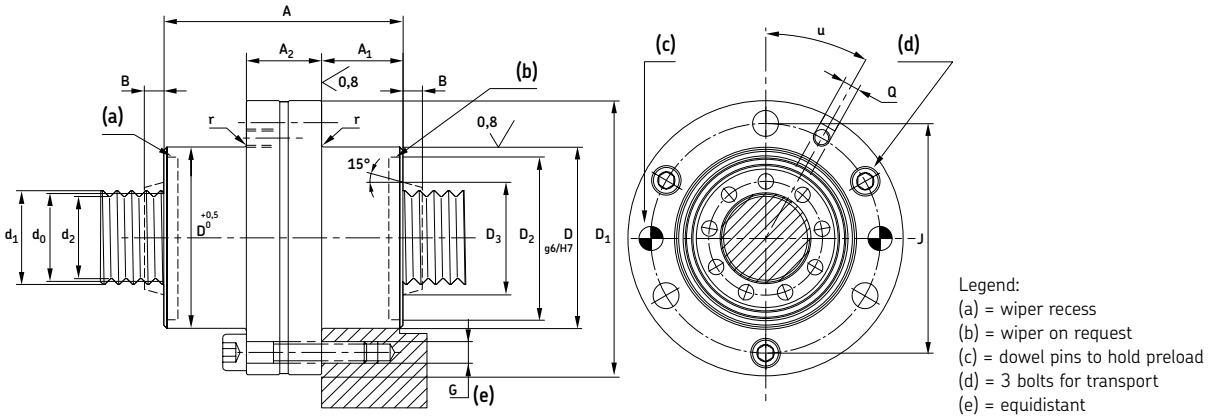

Legend:
(a) = wiper recess
(b) = wiper on request
(c) = dowel pins to hold preload
(d) = 3 bolts for transport
(e) = equidistant

Designations	Dimensions												Basic load ratings		Preload torque	
	Lead												dynamic	static		
	d_0	P_h	l_{tp}	d_1	d_2	D	A h12	D_1	J js12	G	Q	u	C_a	C_{oa}	T_{pe}	T_{pr}
	mm											[°]	kN		Nm	
TRK 48×5	48	5	2 600	48,4	47,3	105	127	150	127	6×M12	M8×1	30	109,13	240,77	1,3	
PRK 48×5	48	5	2 600	48,4	47,3	105	127	150	127	6×M12	M8×1	30	109,13	240,77		1,24-2,47
TRK 48×8	48	8	2 600	48,6	47,1	105	127	150	127	6×M12	M8×1	30	120,34	235,3	1,3	
PRK 48×8	48	8	2 600	48,6	47,1	105	127	150	127	6×M12	M8×1	30	120,34	235,3		1,24-2,47
TRK 48×10	48	10	2 600	48,8	46,7	105	127	150	127	6×M12	M8×1	30	127,57	237,56	1,3	
PRK 48×10	48	10	2 600	48,8	46,7	105	127	150	127	6×M12	M8×1	30	127,57	237,56		1,24-2,47
TRK 48×15	48	15	2 600	49,2	46,1	105	127	150	127	6×M12	M8×1	30	142,01	243,18	1,3	
PRK 48×15	48	15	2 600	49,2	46,1	105	127	150	127	6×M12	M8×1	30	142,01	243,18		1,24-2,47
TRK 48×20	48	20	2 600	49,5	45,5	105	127	150	127	6×M12	M8×1	30	146,38	231,14	1,3	
PRK 48×20	48	20	2 600	49,5	45,5	105	127	150	127	6×M12	M8×1	30	146,38	231,14		1,24-2,47
TRK 48×25	48	25	2 600	49,9	44,9	105	127	150	127	6×M12	M8×1	30	157,5	245,52	1,3	
PRK 48×25	48	25	2 600	49,9	44,9	105	127	150	127	6×M12	M8×1	30	157,5	245,52		1,24-2,47
TRK 56×12	56	12	3 100	56,8	54,7	105	112	150	127	6×M12	M8×1	30	116,9	216,56	1,68	
PRK 56×12	56	12	3 100	56,8	54,7	105	112	150	127	6×M12	M8×1	30	116,9	216,56		1,60-3,19
TRK 56×24	56	24	3 100	57,5	53,5	105	112	150	127	6×M12	M8×1	30	133,45	209,58	1,68	
PRK 56×24	56	24	3 100	57,5	53,5	105	112	150	127	6×M12	M8×1	30	133,45	209,58		1,60-3,19
TRK 56×36	56	36	3 100	58,3	52,3	105	112	150	127	6×M12	M8×1	30	142,33	212,12	1,68	
PRK 56×36	56	36	3 100	58,3	52,3	105	112	150	127	6×M12	M8×1	30	142,33	212,12		2,39-3,99
TRK 60×10	60	10	3 400	60,8	58,7	122	152	180	150	6×M16	M8×1	30	186,53	389,85	1,88	
PRK 60×10	60	10	3 400	60,8	58,7	122	152	180	150	6×M16	M8×1	30	186,53	389,85		1,79-3,58
TRK 60×15	60	15	3 400	61,2	58,1	122	152	180	150	6×M16	M8×1	30	205,54	391,35	1,88	
PRK 60×15	60	15	3 400	61,2	58,1	122	152	180	150	6×M16	M8×1	30	205,54	391,35		1,79-3,58
TRK 60×20	60	20	3 400	61,5	57,5	122	152	180	150	6×M16	M8×1	30	217,61	392,83	1,88	
PRK 60×20	60	20	3 400	61,5	57,5	122	152	180	150	6×M16	M8×1	30	217,61	392,83		1,79-3,58
TRK 64×12	64	12	3 650	64,8	62,7	120	129	180	150	6×M16	M8×1	30	165,57	381,65	2,09	
PRK 64×12	64	12	3 650	64,8	62,7	120	129	180	150	6×M16	M8×1	30	165,57	381,65		1,99-3,98
TRK 64×18	64	18	3 650	65,2	62,1	120	129	180	150	6×M16	M8×1	30	176,93	362,78	2,09	
PRK 64×18	64	18	3 650	65,2	62,1	120	129	180	150	6×M16	M8×1	30	176,93	362,78		1,99-3,98
TRK 64×24	64	24	3 650	65,5	61,5	120	129	180	150	6×M16	M8×1	30	183,76	344,81	2,09	
PRK 64×24	64	24	3 650	65,5	61,5	120	129	180	150	6×M16	M8×1	30	183,76	344,81		1,99-3,98
TRK 64×30	64	30	3 650	65,9	60,9	120	129	180	150	6×M16	M8×1	30	177,73	309,92	2,09	
PRK 64×30	64	30	3 650	65,9	60,9	120	129	180	150	6×M16	M8×1	30	177,73	309,92		1,99-3,98
TRK 64×36	64	36	3 650	66,3	60,3	120	129	180	150	6×M16	M8×1	30	172,69	294,69	2,09	
PRK 64×36	64	36	3 650	66,3	60,3	120	129	180	150	6×M16	M8×1	30	172,69	294,69		1,99-3,98

Symbols, see **page 157**

Recirculating roller screws

BVC - Range

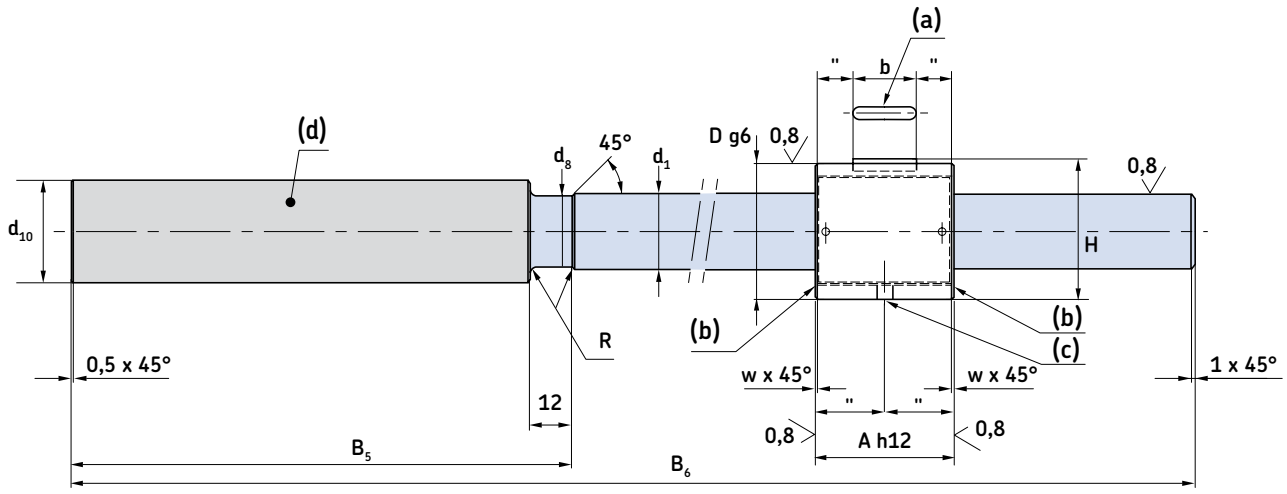

Legend:
(a) = key
(b) = no wiper
(c) = lubrication Q
(d) = thrust bearing FLRBU*

Screw ends can be machined to customer requirements

Maximum threaded length: can be cut and machined to customer requirements

Recirculating roller screws without end machining, lead precision G5 according to ISO standard.
Nut preloaded by rollers for backlash elimination.

Designations	Dimensions						Basic load ratings dynamic	static
	d_0	B_6	d_{10}	B_5	D	A	C_a	C_{oa}
	mm						kN	
BVC 20×1-R1	20	400	28	116	34	37	18,5	36,6
BVC 25×1-R1	25	500	33	159	42	44	32,9	68,4
BVC 32×1-R1	32	500	40	179	54	57	64,3	159,2

N.B.:
Nut and thrust bearing unit cannot be modified. The standard version has the flange of the thrust bearing is located on the KMT side.

* Preload torque measured at 50 rpm with SKF LGEP2 as lubricant

Symbols, see **page 157**

FLRBU / BVC

Recirculating roller screw with thrust bearing unit

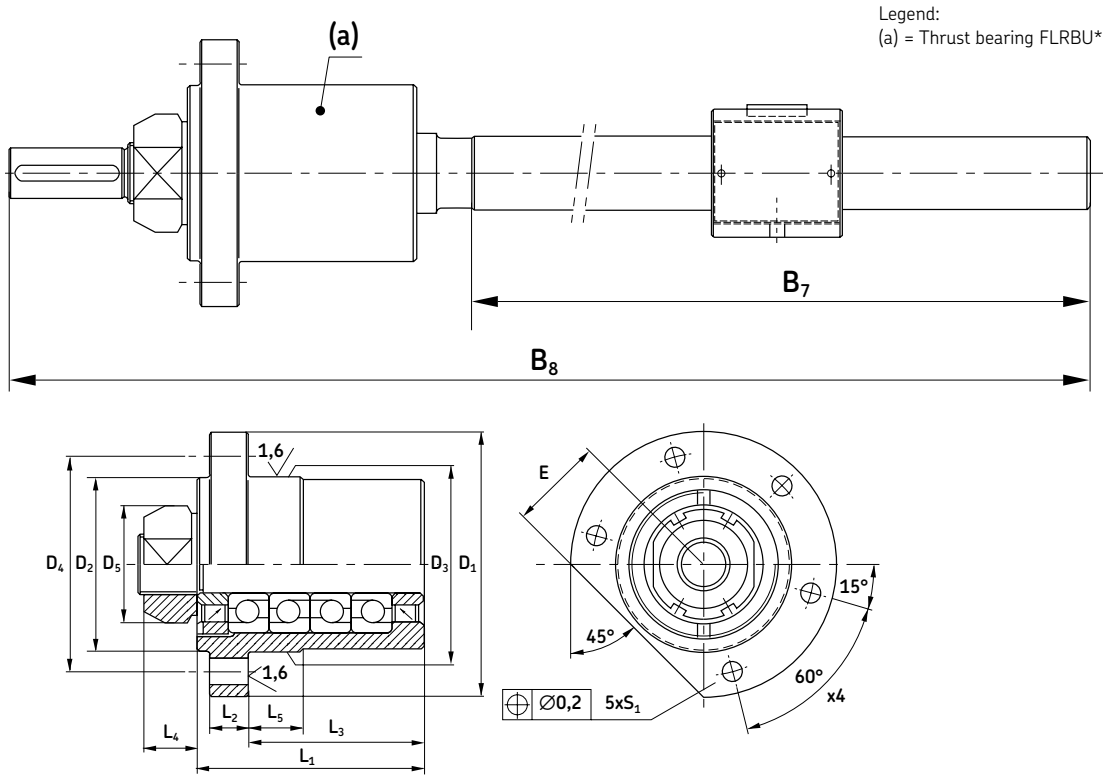

Designations	Dimensions										Basic load ratings dynamic	static
	d_0	B_7	B_8	L_1	L_2	L_3	D_1	D_3	D_4	E	C_a	C_{oa}
	mm										kN	
FLRBU2/BVC 20×1-R1	20	284	397	46	10	32	90	60	76	32	27,9	31,9
FLRBU3/BVC 25×1-R1	25	341	497	77	13	60	90	60	74	32	40,1	63,8
FLRBU4/BVC 32×1-R1	32	321	497	89	16	68	120	80	100	44	74,2	119,2

* Preload torque measured at 50 rpm with SKF LGEP2 as lubricant

Symbols, see **page 157**

SVC - Range

Cylindrical nut with axial play, nut without wiper recesses

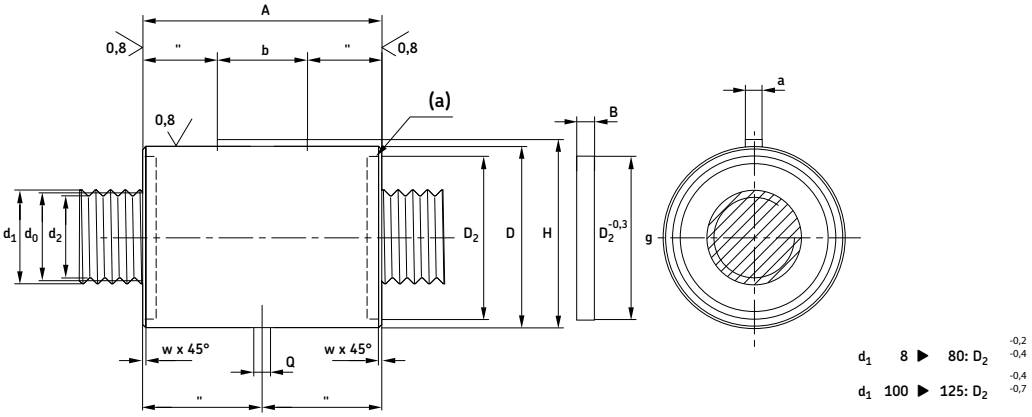

d_1 8 ▶ 80: D_2 $^{-0,2}_{-0,4}$

d_1 100 ▶ 125: D_2 $^{-0,4}_{-0,7}$

Legend:
(a) = wiper on request

Designations	Dimensions												Basic load ratings	
	Lead												dynamic	static
	d_1	P_h	l_{tp}	s_{ap}	d_0	d_2	D g6/H7	A h12	a h9	b	H	Q	C_a	C_{oa}
	mm												kN	
SVC 8×1	8	1	500	0,02	7,7	7,1	20	31	2	12	20,8	5	8,4	11
SVC 10×1	10	1	650	0,02	9,7	9,1	22	31	2	12	22,8	5	8,9	11,4
SVC 10×2	10	2	650	0,02	9,7	9,1	22	31	2	12	22,8	5	8,9	11,4
SVC 12×1	12	1	750	0,02	11,7	11,1	24	31	2	12	24,8	5	10,3	14
SVC 12×2	12	2	750	0,02	11,7	11,1	24	31	2	12	24,8	5	10,3	14
SVC 16×1	16	1	1 050	0,02	15,7	15,1	29	31	3	12	30,2	5	11,5	16,8
SVC 16×2	16	2	1 050	0,02	15,7	15,1	29	31	3	12	30,2	5	11,5	16,8
SVC 20×1	20	1	1 300	0,02	19,7	19,1	34	37	3	16	35,2	5	18,5	36,6
SVC 20×2	20	2	1 300	0,02	19,7	19,1	34	37	3	16	35,2	5	18,5	36,6
SVC 25×1	25	1	1 650	0,02	24,7	24,1	42	44	4	20	43,5	5	32,9	68,4
SVC 25×2	25	2	1 650	0,02	24,7	24,1	42	44	4	20	43,5	5	32,9	68,4
SVC 32×1	32	1	2 150	0,02	31,7	31,1	54	57	4	25	55,5	5	64,3	159,2
SVC 32×2	32	2	2 150	0,02	31,7	31,1	54	57	4	25	55,5	5	64,3	159,2
SVC 40×1	40	1	2 700	0,02	39,7	39,1	68	63	5	32	70	5	79,1	231,6
SVC 40×2	40	2	2 700	0,04	39,3	38,2	68	72	5	32	70	5	49,9	117,2
SVC 50×1	50	1	3 500	0,02	49,7	49,1	82	85	6	32	84,5	8	189,8	544,3
SVC 50×2	50	2	3 500	0,04	49,3	48,7	82	85	6	32	84,5	8	98,1	249,4
SVC 50×3	50	3	3 500	0,04	49,5	48,6	82	92	6	32	84,5	8	153	443,3
SVC 50×4	50	4	3 500	0,04	49,3	48,2	82	85	6	32	84,5	8	98,1	249,4
SVC 63×2	63	2	4 500	0,04	62,3	61,2	103	104	6	40	105,5	8	185,8	533,5
SVC 63×4	63	4	4 500	0,04	62,3	61,2	103	104	6	40	105,5	8	185,8	533,5
SVC 80×4	80	4	6 000	0,07	78,6	76,4	141	175	8	63	144	10	324,9	887,7
SVC 100×5	100	5	8 000	0,07	98,3	95,5	175	205	10	80	178	10	468,5	1 376,3
SVC 125×5	125	5	8 000	0,07	123,3	120,5	220	250	12	800	223	12	756	2 270

Symbols, see **page 157**

PVU - Range

Cylindrical nut, preloaded for optimum rigidity, nut without wiper recesses

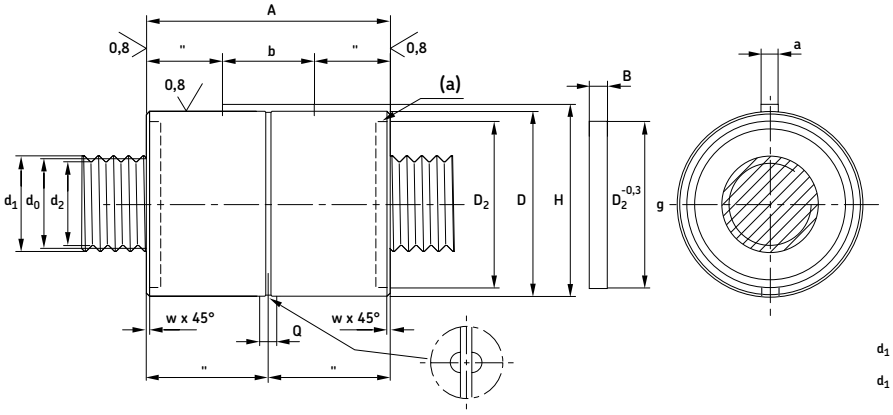

d_1 8 ▶ 80: D_2 $^{-0,2}_{-0,4}$

d_1 100 ▶ 125: D_2 $^{-0,4}_{-0,7}$

Legend:
(a) = wiper on request

Designations	Dimensions												
	d_0	d_1	d_2	D g6/H7	A with wiper recess h12	A without wiper recess h12	B	W	a h9	b	H	Q	D_2
	mm												
PVU 8×1	7,7	8	7,1	20	40	40	4	0,2	2	12	20,8	5	16,5
PVU 10×1	9,7	10	9,1	22	40	40	4	0,2	2	12	22,8	5	18,5
PVU 10×2	9,7	10	9,1	22	40	40	4	0,2	2	12	22,8	5	18,5
PVU 12×1	11,7	12	11,1	24	40	40	4	0,2	2	12	24,8	5	20,5
PVU 12×2	11,7	12	11,1	24	40	40	4	0,2	2	12	24,8	5	20,5
PVU 16×1	15,7	16	15,71	29	40	40	4	0,5	3	12	30,2	5	25
PVU 16×2	15,7	16	15,71	29	40	40	4	0,5	3	12	30,2	5	25
PVU 20×1	19,7	20	19,71	34	45	45	4	0,5	3	16	35,2	5	28,5
PVU 20×2	19,7	20	19,71	34	45	45	4	0,5	3	16	35,2	5	28,5
PVU 25×1	24,7	25	24,1	42	54	54	5	0,5	4	20	43,5	5	36
PVU 25×2	24,7	25	24,1	42	54	54	5	0,5	4	20	43,5	5	36
PVU 32×1	31,7	32	31,1	54	67	67	5	1	4	25	55,5	5	45
PVU 32×2	31,7	32	31,1	54	67	67	5	1	4	25	55,5	5	45
PVU 40×1	39,7	40	39,1	68	75	75	5	1	5	32	40	5	55
PVU 40×2	39,3	40	38,2	68	84	84	5	1	5	32	70	5	57
PVU 50×1	49,7	50	49,1	82	101	101	7	1	6	32	84,5	8	70
PVU 50×2	49,3	50	48,7	82	101	101	7	1	6	32	84,5	8	70
PVU 50×3	49,5	50	48,6	82	108	108	7	1,5	6	35	84,5	8	70
PVU 50×4	49,3	50	48,2	82	101	101	7	1	6	32	84,5	8	70
PVU 63×2	62,3	63	61,2	103	120	120	7	1	6	40	105,5	8	94
PVU 63×4	62,3	63	61,2	103	120	120	7	1	6	40	105,5	8	94
PVU 80×4	78,6	80	76,4	141	197	197	10	1,5	8	63	144	10	120
PVU 100×5	98,4	100	95,5	175	237	237	15	2	10	80	178	10	150
PVU 125×5	123,3	125	120,5	120	282	282	15	3	12	100	223	12	185

Symbols, see **page 157**

PVK - Range

Flanged nut, preloaded for optimum rigidity,
nut without wiper recesses

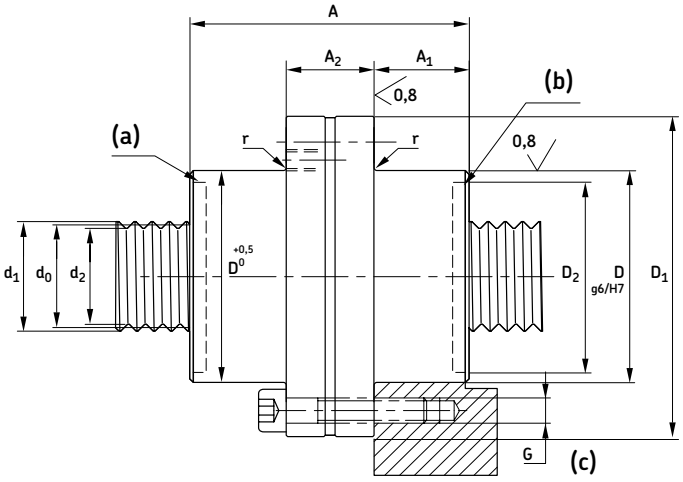

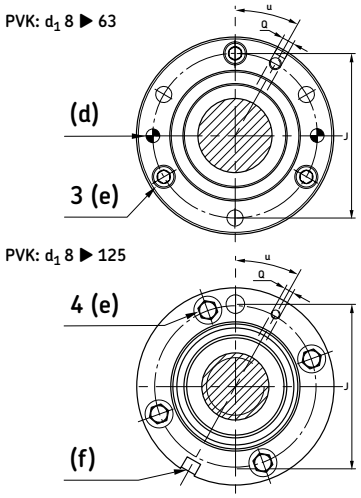

Legend:
(a) = wiper recess
(b) = wiper on request
(c) = equidistant
(d) = dowel pins to hold preload
(e) = bolts for transport
(f) = key to hold preload

Designations	Dimensions												Basic load ratings		Preload torque
	Lead												dynamic	static	
	d_1	P_h	l_{tp}	d_0	d_2	D	A h12	D_1	J js12	G	Q	u	C_a	C_{oa}	T_{pr}
	mm											[°]	kN		Nm
PVK 8×1	8	1	400	7,7	7,1	22	40	43	33	6×M4	M6	30	4,8	5,5	0,02 - 0,08
PVK 10×1	10	1	500	9,7	9,1	22	40	43	33	6×M4	M6	30	5,1	5,7	0,03 - 0,10
PVK 10×2	10	2	500	9,7	9,1	22	40	43	33	6×M4	M6	30	5,1	5,7	0,03 - 0,10
PVK 12×1	12	1	600	11,7	11,1	25	40	46	36	6×M4	M6	30	5,9	7	0,05 - 0,15
PVK 12×2	12	2	600	11,7	11,1	25	40	46	36	6×M4	M6	30	5,9	7	0,05 - 0,15
PVK 16×1	16	1	825	15,7	15,1	30	40	51	41	6×M4	M6	30	6,6	8,4	0,10 - 0,20
PVK 16×2	16	2	825	15,7	15,1	30	40	51	41	6×M4	M6	30	6,6	8,4	0,10 - 0,20
PVK 20×1	20	1	1 050	19,7	19,1	35	45	58	46	6×M5	M6	30	10,6	18,3	0,18 - 0,32
PVK 20×2	20	2	1 050	19,7	19,1	35	45	58	46	6×M5	M6	30	10,6	18,3	0,20 - 0,35
PVK 25×1	25	1	1 300	24,7	24,1	45	54	68	56	6×M5	M6	30	18,9	34,2	0,35 - 0,65
PVK 25×2	25	2	1 300	24,7	24,1	45	54	68	56	6×M5	M6	30	18,9	34,2	0,40 - 0,70
PVK 32×1	32	1	1 700	31,7	31,1	56	67	84	70	6×M6	M6	30	36,9	79,6	0,50 - 0,95
PVK 32×2	32	2	1 700	31,7	31,1	56	67	84	70	6×M6	M6	30	36,9	79,6	0,50 - 0,95
PVK 40×1	40	1	2 150	39,7	39,1	68	75	102	85	6×M8	M6	30	45,4	115,8	0,70 - 1,40
PVK 40×2	40	2	2 150	39,3	38,2	68	84	102	85	6×M8	M6	30	28,7	58,6	0,70 - 1,40
PVK 50×1	50	1	2 800	49,7	49,1	82	101	124	102	6×M10	M6	30	109	272,2	1,20 - 2,50
PVK 50×2	50	2	2 800	49,3	48,7	82	101	124	102	6×M10	M6	30	56,3	124,7	1,20 - 2,50
PVK 50×3	50	3	2 800	49,5	48,6	82	108	124	102	6×M10	M6	30	88	221,7	1,20 - 2,50
PVK 50×4	50	4	2 800	49,3	48,2	82	101	124	102	6×M10	M6	30	56,3	124,7	1,20 - 2,50
PVK 63×2	63	2	3 600	62,3	61,2	105	120	150	127	6×M12	M8×1	30	106,7	266,8	1,80 - 3,20
PVK 63×4	63	4	3 600	62,3	61,2	105	120	150	127	6×M12	M8×1	30	106,7	266,8	2,00 - 3,50
PVK 80×4	80	4	4 000	78,6	76,4	140	197	200	170	8×M16	M8×1	22°30	186,6	443,9	3,00 - 5,50
PVK 100×5	100	5	4 000	98,4	95,5	180	237	240	210	10×M16	M8×1	15	269,1	688,2	4,50 - 7,50
PVK 125×5	125	5	4 000	123,3	120,5	220	282	310	270	12×M18	M8×1	15	434	1 385	7,00 - 10,0

Symbols, see **page 157**

FLRBU - Accessories for roller screws

Accessories for screw shaft, flanged thrust bearing units: FLRBU

In standard version, the “FLRBU” thrust bearing unit is assembled according to drawing pages 138, 139, 150 and 151. If you require a different assembly, please indicate it when ordering. Greased for life with SKF LGEP2.

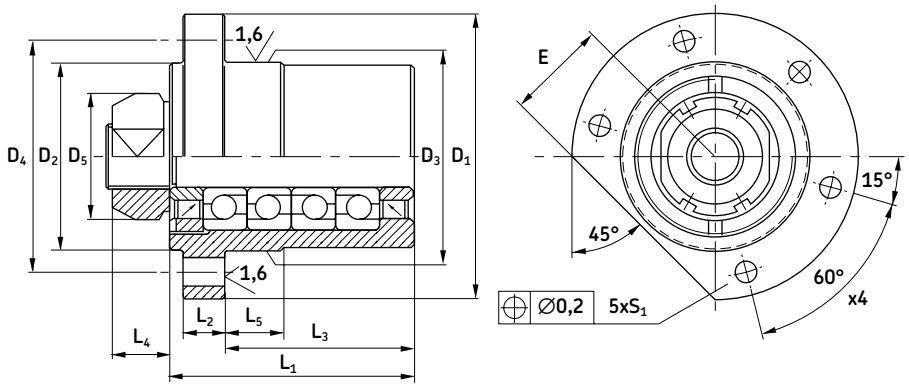

Designations	Dimensions										Attachment screw	Angular contact	Basic load ratings		Max preload torque at 50 rpm*	Axial rigidity	Tilt rigidity
	L_1	L_2	L_3	L_4	D_1	D_2	D_3 h7	D_4	D_5	S_1 H13		E	C_a	C_{oa}			
	mm												kN		Nm	N/µm	Nm/mrad
FLRBU1	42	10	25	14	76	50	47	63	30	6,6	M6×25	27	13,3	14,7	0,10	150	40
FLRBU2	46	10	32	18	90	62	60	76	37	6,6	M6×25	32	27,9	31,9	0,25	190	51
FLRBU3	77	13	60	18	90	59	60	74	40	9	M8×25	32	40,1	63,8	0,25	400	140
FLRBU4	89	16	68	20	120	80	80	100	44	11	M10×30	44	74,2	119,2	1,10	450	160
FLRBU5	110	20	82	22	140	99	100	120	54	13	M12×40	54	109,4	188,4	1,10	600	715
FLRBU6	140	25	98,5	25	171	130	130	152	75	13	M12×40	67	208,8	392,3	1,50	750	1 000
FLRBU7	180	30	133,5	28	225	170	170	198	95	17,5	M16×55	87	305,3	615,4	2,00	1 250	3 200
FLRBU8	235	35	179	32	285	219	220	252	125	22	M20	115	473,1	1123	2,30	1 500	7 500

* Preload torque measured at 50 rpm with SKF LGEP2 as lubricant

Flanged bearing unit designations	Bearing designations	Quantity of bearings
FLRBU1	7201 BEGBP	2
FLRBU2	7303 BEGBP	2
FLRBU3	7204 BEGBP	4
FLRBU4	7305 BEGBP	4
FLRBU5	7307 BEGBP	4
FLRBU6	7310 BEGBP	4
FLRBU7	7313 BEGBP	4
FLRBU8	7318 BEGBP	4

Symbols, see **page 157**

Thrust bearing units for the standard roller screw range

Flanged thrust bearing	Suitable for SRC & SRF	Suitable for PRU & PRK
FLRBU1	SR 8×4-R4	PR 8×4-R4 PR 12×5-R5 PR 15×5-R5 – PR 15×8-R5
FLRBU2	SR 12×5-R5 SR 15×5-R5 – SR 15×8-R5 SR 20×6-R6	PR 20×6-R6 PR 21×5-R5 – PR 21×6-R5 – PR21×8-R5 PR 24×6-R6 – PR 24×12-R6
FLRBU3	SR 24×6-R6	PR 21×10-R5 PR 25×5-R5 – PR 25×10-R5 – PR 25×15-R5
FLRBU4	SR 21×5-R5 – SR 21×6-R5 – SR 21×8-R5 SR 21×10-R5 SR 24×12-R6 SR 25×5-R5 – SR 25×10-R5 – SR 25×15-R5	PR 30×5-R5 – PR 30×6-R5 – PR 30×10-R5 PR 30×20-R5 PR 36×6-R6 – PR 36×9-R6 – PR 36×12-R6 PR 36×18-R6 – PR 36×24-R6 PR 39×5-R5 PR 44×8-R6 – PR 44×12-R6
FLRBU5	SR 30×5-R5 – SR 30×6-R5 – SR 30×10-R5 SR 36×6-R6 – SR 36×9-R6 – SR 36×12-R6 SR 36×18-R6	PR 39×10-R5 – PR 39×15-R5 – PR 39×20-R5 PR 39×25-R5 PR 44×18-R6 – PR 44×24-R6 – PR 44×30-R6 PR 48×5-R5 – PR 48×8-R5 PR 56×12-R6
FLRBU6	SR 30×20-R5 SR 36×24-R6 SR 39×5-R5 – SR 39×10-R5 – SR 39×15-R5 SR 39×20-R5 – SR 39×25-R5 SR 44×8-R6 – SR 44×12-R6 – SR 44×18-R6 SR 44×24-R6 – SR 44×30-R6 SR 48×5-R5 – SR 48×8-R5 – SR 48×10-R5 SR 48×15-R5 SR 56×12-R6	PR 48×10-R5 – PR 48×15-R5 – PR 48×20-R5 PR 48×25-R5 PR 56×24-R6 – PR 56×36-R6 PR 60×10-R5 – PR 60×15-R5 – PR 60×20-R5 PR 64×12-R6 – PR 64×18-R6 – PR 64×24-R6 PR 64×30-R6 – PR 64×36-R6
FLRBU7	SR 48×15-R5 – SR 48×20-R5 – SR 48×25-R5 SR 56×24-R6 – SR 56×36-R6 SR 64×12-R6 – SR 64×18-R6 – SR 64×24-R6	
FLRBU8	SR 60×10-R5 – SR 60×15-R5 – SR 60×20-R5 SR 75×10-R5 SR 80×12-R6 – SR 80×18-R6 – SR 80×24-R6 SR 80×36-R6 – SR 80×42-R6	

Flanged thrust bearing	Suitable for SVC	Suitable for PVU & PVK
FLRBU1	SV 8×1-R1 – SV 8×2-R2 SV10×1-R1 – SV 10×2-R2 SV12×1-R1 – SV12×2-R2 SV16×1-R1 – SV16×2-R2	PV 8×1-R1-PV10×1-R1 PV12×1-R1-PV16×1-R1 PV16×2-R1-PV20×1-R1
FLRBU2	SV20×1-R1 and SV20×2-R2	PV25×1-R1-PV25×2-R2
FLRBU3	SV25×1-R1 – SV25×2-R2	PV32×1-R1-PV32×2-R2 PV40×2-R1
FLRBU4	SV32×1-R1 – SV32×2-R2 SV40×2-R1	PV40×1-R1 PV50×2-R1-PV50×4-R2
FLRBU5	SV40×1-R1 SV50×2-R1 – SV 50×4-R2	PV50×1 -R1-PV50×3-R2 PV63×2-R1-PV63×4-R2
FLRBU6	SV50×1-R1 – SV50×3-R2 SV63×2-R1 – SV63×4-R2	PV80×4-R1
FLRBU7	SV 80×4-R1	PV100×5-R1
FLRBU8	SV 100×5-R1	

Symbols, see **page 157**

Symbols

C_{req}	N	Required load rating
C_a	kN	The dynamic load rating (L10 life) is such that 90 % of a sufficiently large sample of identical screws can be expected to attain or exceed 1 million revolutions under this constant centrally acting pure axial load without fatigue (flaking).
C_{oa}	kN	The static load rating is that axial constant centrally acting load which produces a total permanent deformation of one raceway and roller of 0,0001 of the diameter of the curved surface of the roller.
F	N	Axial load
F_c	N	Compression load
F_m	N	Constant mean axial load
F_{pr}	N	The preload force between a nut half (or nut) and the shaft
F_q	N	The squeeze load applied to two nut halves (or nuts) by the housing or fixing bolts
Hv	-	Vickers hardness
I	kgm^2	Inertia
I_L	kgm^2	Inertia of load
I_M	kgm^2	Inertia of motor
I_{nn}	kgm^2	Inertia of nut when turning nut
I_{ns}	kgm^2	Inertia of rollers when turning shaft
I_s	$kgmm^2/m$	Inertia of screw shaft per metre
L	10^6 revs	Life
L_{10}	10^6 revs	Basic life rating, millions of revolutions
L_{10h}	hours	Basic life rating, operating hours
M	µm	Maximum difference between mean travels of screws in a matched set
N	-	Number of thread starts on the screw shaft
N_r	-	Standard number of rollers
N_{max}	-	Maximum number of rollers
P	W	Power
P_h	mm	Lead
R	N/µm	Rigidity
R_n	N/µm	Nut rigidity
R_{ng}	N/µm	Minimum guaranteed nut rigidity
R_{nr}	N/µm	Reference nut rigidity

including deflection of:
- the nut body
- rollers/nut contact
- rollers/screw shaft contact
- length of screw shaft in contact with rollers

R_s	N/µm	Screw shaft rigidity
R_t	N/µm	Total rigidity
T	Nm	Torque
T_B	Nm	Brake torque
T_{dt}	Nm	Total torque at constant speed
T_f	Nm	Torque from friction in support bearings, motor, seals, etc
T_{pe}	Nm	Torque for play elimination
T_{pr}	Nm	Preload torque
T_{st}	Nm	Starting torque
T_t	Nm	Total torque
U	mm	Stroke length
V	h^{-1}	Strokes per hour
W	h/day	Hours per day
X	days/year	Days per year
Y	years	Years
Z_s	cc	Grease quantity for screw shaft
Z_n	cc	Grease quantity for nut

life calculation

c	µm	Travel compensation - the difference between the specified travel and the nominal travel. Its value is always defined by the customer: if not specified it will be assumed to be zero. (The specified travel can also be defined by the specified lead multiplied by the number of revolutions)
d_o	mm	Nominal
d_1	mm	Outside
d_2	mm	Root
d_b	mm	Bore

diameter of screw shaft

e_p	µm	Tolerance of actual mean travel, l_m relative to specified travel l_s
f	-	Factors
g	m/s^2	Acceleration of gravity: 9,8
l	mm	Length
l_o	mm	Nominal travel - the nominal lead multiplied by the number of revolutions
l_1	mm	Threaded length
l_e	mm	Excess travel - at each end of the threaded length a distance le is subtracted to leave l_u the useful travel. The specified lead precision does not apply to the lengths l_e. $l_u = l_1 - 2\ l_e$
l_m	mm	Actual mean travel. The curve is the result of measurements at 20 °C of the screw shaft. l_m is the line which fits the curve by the method of least squares
l_s	mm	Specified travel
l_{tp}	mm	Maximum total length
l_u	mm	Useful travel - the length of thread which is subject to the specifi ed lead precision
m	kg	Mass
m_L	kg	Mass of the load
m_n	kg	Mass of the nut
m_s	kg/m	Mass of the screw shaft per metre
n	rpm	Rotational speed
n_{cr}	rpm	Critical speed
n_p	rpm	Maximum permissible speed
s_{ap}	mm	Maximum axial play
t	µm	Manufacturing tolerance
v	µm	Travel variation - the band width or the distance between the two straight lines parallel to the actual mean travel which enclose the curve
v_{300}	µm	The bandwidth over any 300 mm section of the useful travel. v_{300a} and v_{300p} are actual and permissible values
v_u	µm	The bandwidth over the useful travel. v_{ua} and v_{up} are actual and permissible values
δ	µm	Deflection
α	°	Helix angle of the screw shaft thread
λ	°	Friction angle
µ	–	Coefficient of friction

$\tan \lambda = \mu$

μ_{st}	–	Coefficient of friction when starting
μ_F	–	Coefficient of friction for bearing
σ	MPa	Nominal axial stress
σ_p	MPa	Real axial stress
σ_t	MPa	Total stress
τ	MPa	Nominal shear stress
τ_p	MPa	Real shear stress
η	–	Theoretical direct efficiency
η'	–	Theoretical indirect efficiency
η_p	–	Real direct effi ciency
η'_p	–	Real indirect effi ciency
θ	°	Angle of twist
$\dot{\omega}$	rad/s^2	Angular acceleration
Ω	mm × rpm	Speed quotient, $n_p \times d_o$

Applications

In response to industry's ultimate need to produce more with less, SKF has combined its knowledge and experience with the latest technology to develop solutions for your specific conditions. Whether your goal is to design equipment that provides more customer value, or to increase overall profitability, with SKF experience and expertise, you're likely to find a real solution.

Plastic injection molding

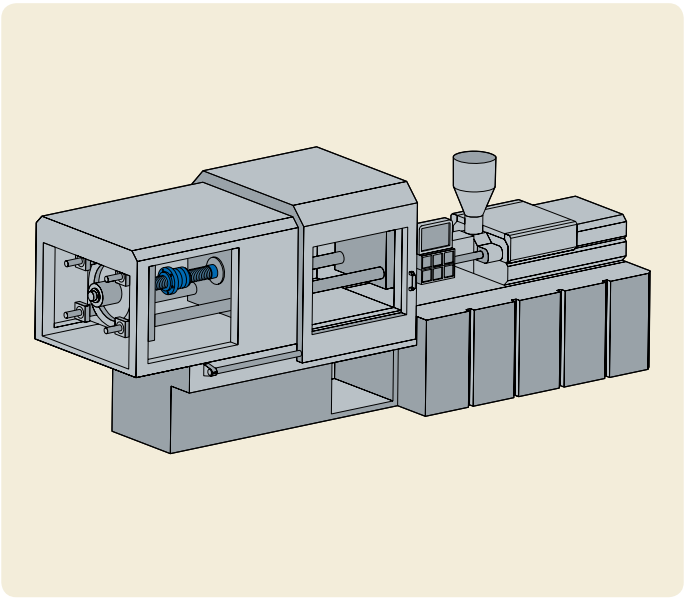

Components application
a) Planetary roller screws

Metals industry

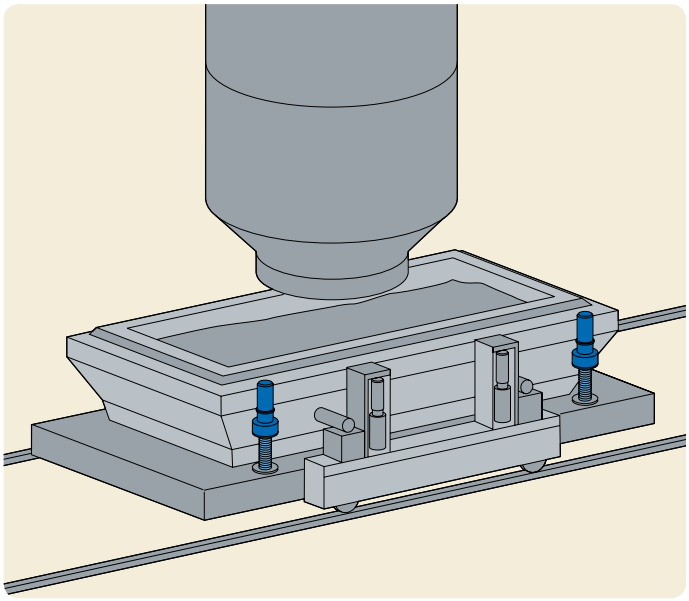

Components application
a) Planetary roller screws

Electric presses

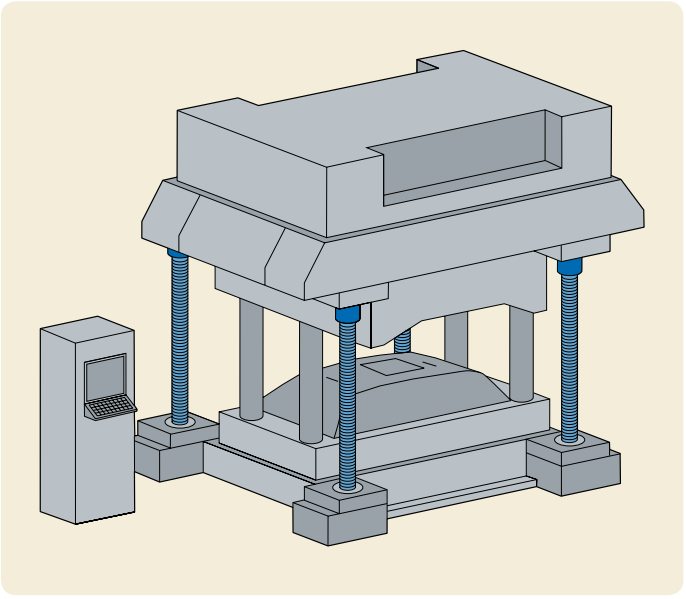

Components application
a) Recirculating roller scerws

Tilting train

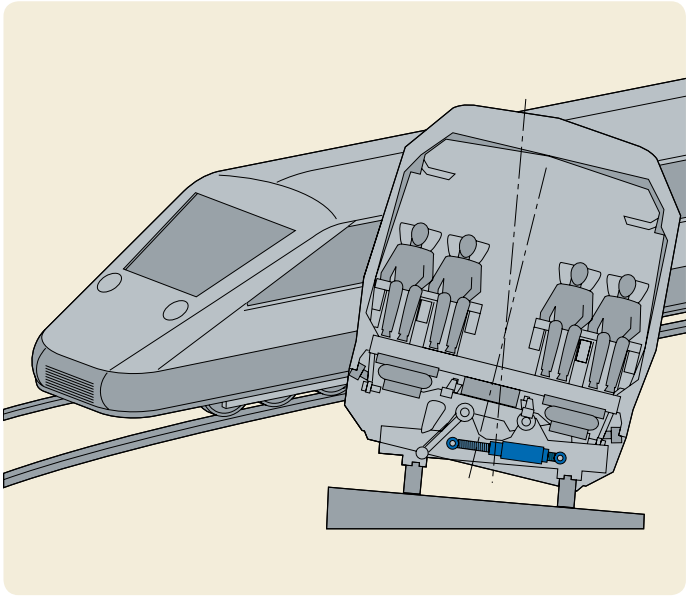

Components application
a) Planetary roller screws

Notes

The right solution under all conditions



According to its own survival mode or defence demands, the chameleon can quickly change its own skin colour in order to reduce its visibility to any predator.

This ability of a species to adapt to the surrounding environment has served as an inspiration for SKF to create customised solutions which are totally in line with individual requirements.

Beyond the standard product range, SKF designs and manufactures the ideal solutions to render each application faster and more efficient.

Ask SKF. Your customised solution is close at hand.

Actuation systems

About Actuation Systems

Linear drive applications often require superior performance from the actuator in speed, temperature stability, accuracy and noise levels. SKF produces a large range of actuator products designed to satisfy the most demanding requirements. The assortment includes telescopic pillars (**fig. 1**), linear actuators (**fig. 2**) and control units (**fig. 3**), providing a total system solution for various applications. SKF leads in the industrial field where actuators are used in many different applications. SKF supplies a wide range of actuators but also offers extensive knowledge and experience in application engineering. This background has developed through long standing cooperation with leading companies in many industrial sectors.

Fig. 1



Fig. 2



Fig. 3



Operating precision (**table 1**)
Comparison of the different positioning components and systems.

Table 1

Operating precision (µm)	Guiding systems	Driving systems	Actuation systems	Positioning systems
0,1-1	Precision rail guides	Roller screws		
1-10	Linear ball bearings, Standard slides	Linear motors		Standard drives or linear motors with all guiding systems
10-100	Profile rail guides	Ball screws	Electro-mechanical actuators	
100-1 000				

Selection guide

Selecting actuators, made easy

Finding the right electric actuator for an application usually requires knowing many application details and making several calculations. However, there are ways to first narrow the selection to one or two safe choices. Using the selection guide on **pages 162-164,** you may easily find those actuators that meet your first criteria of load and speed as well as basic information about available controls and operating devices. This is normally the most important first step to carry out. On **pages 165-223,** you will find detailed information and type keys of the individual product(s). In case you need more explanation on technical terminology (glossary) and important considerations in selecting the right actuator for your applications, **pages 230-232** may be useful.

N.B.:
In addition to this catalogue, all product brochures are available on **www.skf.com** *as PDF files.*

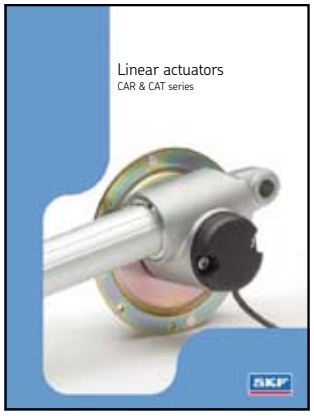

Publication nr. 6162 EN

Telescopic pillars	Type	Max. force push	Max. force pull	Max. speed no load	Max. speed full load	Stroke (S)	Features	Page
		N		mm/s		mm		No.
TELEMAG 								**165**
	TFG	2 500	2 500	19	15	200 - 700	Compact	**166**
	TLG	4 000	0	33	25	200 - 700	Robust	**168**
TELESMART 								**169**
	TXG	1 500	0	23	17	200 - 600	Plug & play	**170**

Linear actuators	Type	Max. force push	Max. force pull	Max. speed no load	Max. speed full load	Stroke (S)	Features	Page
		N		mm/s		mm		No.
CAT								**171**
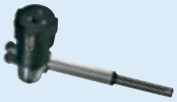	CAT 33H	1 200	1 200	174	150	100 - 400	Flexible, modular	**172**
	CAT 33	3 000	3 000	48	38	100 - 400	Flexible, modular	**174**
	CAT 32B	4 000	4 000	67	50	50 - 700	Flexible, modular	**176**
CAR								**179**
	CAR 22	1 500	1 500	30	20	50 - 300	High duty factor	**180**
	CAR 32	3 500	3 500	60	40	50 - 700	High duty factor	**181**
	CAR 40	6 000	6 000	60	40	100 - 700	High duty factor	**182**
MAGFORCE								**183**
	WSP	2 600	2 600	50	50	100 - 600	Powerful	**184**
	ASM	4 000	4 000	50	50	100 - 600	Powerful	**185**
	DSP	4 500	4 500	40	40	100 - 600	Powerful	**186**
	SKG	15 000	15 000	55	55	100 - 600	Powerful	**187**
	SKD	15 000	15 000	25	25	100 - 600	Powerful	**188**
	STW	15 000	15 000	12	12	100 - 600	Powerful	**189**
	STG	15 000	15 000	14	14	100 - 600	Powerful	**190**
	STD	15 000	15 000	10	10	100 - 600	Powerful	**191**
	SKS/SKA	30 000	30 000	45	45	100 - 600	Powerful	**192**
	SLS	50 000	50 000	70	70	100 - 600	Powerful	**193**
CALA 36								
	CALA 36A	600	600	23	12	50 - 200	In-line	**194**
MATRIX								**196**
	MAX1	4 000	4 000	18	13	50 - 700	Silent operation	**197**
	MAX3	8 000	6 000	18	13	50 - 700	Silent operation	**198**
	MAX6	8 000	6 000	18	15	50 - 700	Plug & play	**199**
CARE								
	CARE 33H	800	800	45	32	50 - 500	Silent operation	**200**
	CARE 33M	1 400	1 400	22	16	50 - 500	Silent operation	**200**
	CARE 33A	2 000	2 000	12	8	50 - 300	Silent operation	**200**
IMD3								
	IMD3-05	120	120	57	45	50 - 300	Silent operation	**202**
	IMD3-10	240	240	30	24	50 - 300	Silent operation	**202**
	IMD3-20	500	500	16	13	50 - 300	Silent operation	**202**
	IMD3-30	750	750	10	8	50 - 300	Silent operation	**202**
	IMD3-40	1 000	1 000	8	6	50 - 300	Silent operation	**202**
ID8								
	ID8A-10	1 500	1 500	38	25	102 - 610	Robust	**204**
	ID8A-20	2 500	2 500	20	13	102 - 610	Robust	**204**
	ID8B-05	2 300	2 300	65	45	102 - 610	Robust	**206**
	ID8B-10	3 500	3 500	36	22	102 - 610	Robust	**206**
	ID8B-20	4 500	4 500	22	13	102 - 610	Robust	**206**
IA4								
	IA4A-10	1 500	1 500	29	25	102 - 610	Robust	**208**
	IA4A-20	2 300	2 300	16	14	102 - 610	Robust	**208**
	IA4B-05	2 300	2 300	57	46	102 - 610	Robust	**210**
	IA4B-10	4 500	4 500	29	25	102 - 610	Robust	**210**
	IA4B-20	6 000	6 000	22	13	102 - 610	Robust	**210**

Control units	Type	Control	Max. motor connections	Input	Output	Page
			n°	V	V/A	No.
BCU 	BCU 4/5/8/9	Basic functions	3	230/120 AC	24/7	**213**
SCU 	SCU	Synchronous	6	22-40 DC 120 AC 230 AC	24/23 or 30 24/18	**216**

Hand switches	Type	Operating power	Max. operating motors	Prot. class	Colour	Page
		VDC/mA	n°	IP		No.
EHA 	EHA 3	12/50	4	67	Grey	**218**

Foot switches	Type	Operating power	Max. operating motors	Prot. class	Colour	Page
		VDC/mA	n°	IP		No.
ST 	STJ	12/50	3	X5	Blue/anthracite	**220**

Desk switches	Type	Operating power	Max. operating motors	Prot. class	Colour	Page
		VDC/mA	n°	IP		No.
ST 	STE	12/50	3	X0	Black	**222**

Telescopic pillars

TELEMAG

The Telemag line of telescopic pillars features the best combination of minimum retracted length and large stroke length (**fig. 4**). They are used wherever robust and safe guiding systems are needed. The attractive design allows the Telemag to often become part of the overall design of the equipment.

Benefits
- High offset load
- Silent operation
- Robust
- Long life time

Fig. 4



4

Type	**Force** push	pull	**Max. speed** no load	full load	**Stroke** (S)	**Retr. Length** (L)	**Voltage**	**Protection class**	**Weight**
	N		mm/s		mm	mm	V	IP	kg
TFG	2 500	2 500	19	15	200–700	S+130	24 DC - 120/230 AC	30	8–19
TLG 10/11-A	4 000	0	14	10	200–700	S+180	24 DC	30	15–30
TLG 10/11-B	2 500	0	17	13	200–700	S+180	24 DC	30	15–30
TLG 10/11-C	1 500	0	33	25	200–700	S+180	24 DC	30	15–30

TELEMAG TFG

Telemag TFG (**fig. 5**) is a very compact, fast and powerful lifting pillar for loads of up to 2 500 N. The TFG can be used for push or pull applications. Thanks to the rigid aluminium profiles and the precision glide pads, the TFG can lift offset loads without distorting. The pillar consists of three designed aluminium profiles inside each other which are extended and retracted by means of an integrated linear actuator. TFG integrates a DC-motor with worm gear, whose rotary motion is converted into a linear motion by means of a spindle nut system.
The pillars run very quietly and with minimum vibration at a maximum speed of 19 mm/s. Maximum stroke length is 700 mm. The TFG is self-locking for both push and pull. The stroke is limited by integrated end limit switches. For additional safety, the TFG has cut-off switches at the end positions as well as a back up nut.

The TFG is compatible with all the other actuators from SKF and can be utilized in a full system of actuators and controls.

Benefits
- Push or pull force
- Compact design
- Fast movement
- Powerful

Options
- Encoder
- Cable feed-through

Accessories
- Control boxes
- Hand switches
- Foot switches

Standards
- EN/IEC 60601-1
- UL 60601-1

Fig. 5



Technical data	Type	24 VDC	120/230 VAC
Max. force* (push or pull)	N	2 500	2 500
Speed	mm/s	15 to 19	15 to 19
Stroke	mm	200 to 700	200 to 700
Retracted length (3 sections)	mm	S+130	S+130
Voltage input	V	24	120/230
Current consumption	A	5	1,8/1
Duty cycle intermittent operation		1/9 min	1/9 min
Duty cycle short-time operation		3 min	3 min
Ambient temperature	°C	+10 to +40	+10 to +40
Protection class	IP	30	30
Isolation class		SELV	I
Weight	kg	8 to 19	8 to 19

* See offset load diagram on next page.

Type code for accessories

Mains cable		Order number
Top mounting plate	Bore 72×72 mm	333360
Bottom mounting plate	Bore 102,5×102,5 mm	264363
Screw for top mounting plate	M10×25 (1 screw required)	510978
Screw for top mounting plate	M6×30 (4 screws required)	510709
Screw for bottom mounting plate	M6×30 (4 screws required)	510709
Mains cable SEV	3 000 mm, black, 3×0,75 mm^2	304345
Mains cable Schuko	3 000 mm, black, 3×0,75 mm^2	304346
Mains cable US	3 000 mm, black, 3×0,75 mm^2	304347
Mains cable British Standard	3 000 mm, black, 3×0,75 mm^2	304355

TELEMAG TFG

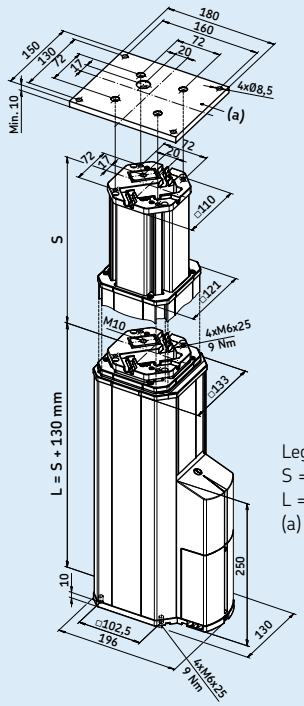

Legend:
S = stroke
L = retracted length
(a) = Option fastening plate Magnetic no 333360

Performance diagram

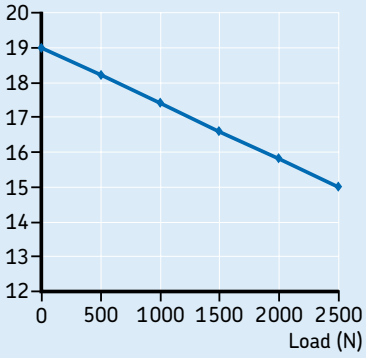

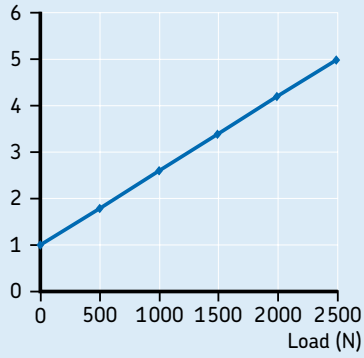

Offset load diagram - 200 mm stroke

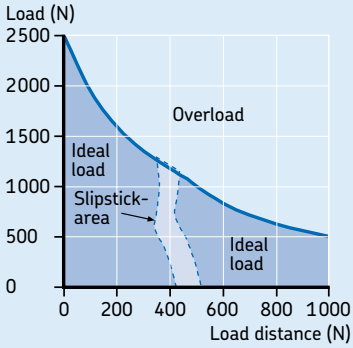

Offset load diagram - 300 mm stroke

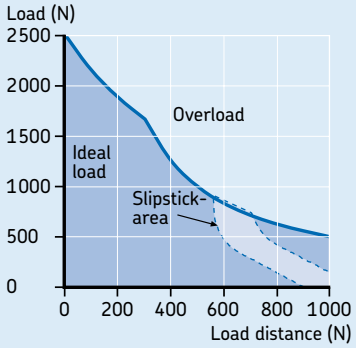

Offset load diagram - 400 mm stroke

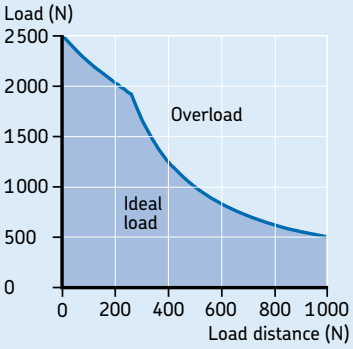

Offset load diagram - 500 mm stroke

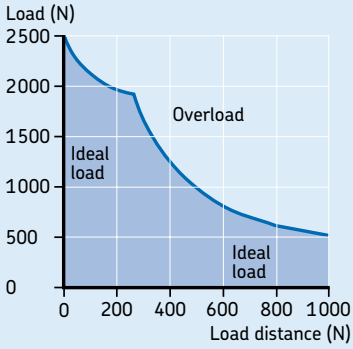

Offset load diagram - 700 mm stroke

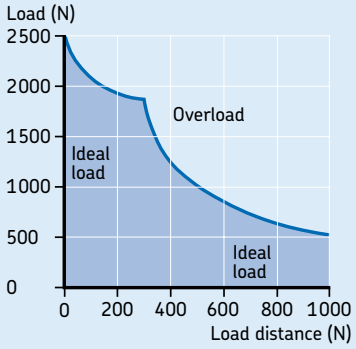

Ordering key

T F G | | 0 - 2 3 | | | - | | | - 0 0 0

Type

Voltage:

24 VDC	1
120 VAC (50/60 Hz)	5
230 VAC (50 Hz)	9

Stroke (S):

200 mm	200
250 mm	250
300 mm	300
350 mm	350
400 mm	400
500 mm	500
700 mm	700

Option:

No option	000
With dual encoder, (14 pulses per 9 mm travel)	E
With mains cable feedthrough (3×AWG16)	C
With control cable feedthrough (10×AWG28)	H

TELEMAG TLG

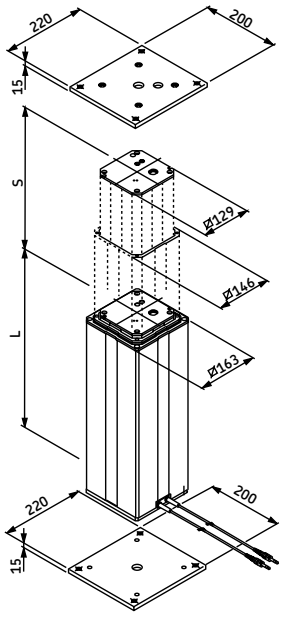

Legend:
S = stroke
L = retracted length

Type	Force push	pull	Max. speed no load	full load	Stroke (S)	Retr. Length (L)	Voltage	Protection class	Weight
	N		mm/s		mm	mm	VDC	IP	kg
TLG 10/11-A	4 000	0	14	10	200–700	S+180	24	30	15 - 30
TLG 10/11-B	2 500	0	17	13	200–700	S+180	24	30	15 - 30
TLG 10/11-C	1 500	0	33	25	200–700	S+180	24	30	15 - 30

Duty cycle 1 min/9 min.

Type code for accessories

Accessories	Order number
Top mounting plate for 2× tube set	290268
Bottom mounting plate for 2× tube set	290351
Top mounting plate for 3× tube set	290268
Bottom mounting plate for 3× tube set	290265
Screw (4/plate) for mounting plate	510707

Ordering key

T L G 1 [ ] [ ] [ ] [ ] [ ] [ ] - 0 0 0

Type

Motor voltage:
24 VDC — 0

Load:
4 000 N — A
2 500 N — B
1 500 N — C

Tube set:
Tube set 2× — A
Tube set 3× — D

Stroke (S):
200 mm — 2
300 mm — 3
400 mm — 4
500 mm — 5
600 mm — 6
700 mm — 7

Cable/connecting plug:
Straight, 2,3 m, jack plug — 2
Straight, 1,0 m, DIN8 plug — 3
Straight, 2,3 m, DIN8 plug — 4
Coiled, 0,6 m, DIN8 plug — B

Option:
No option — 0
Single encoder, 8 pulses, cable with jack plug — A
Dual encoder, cable with DIN8 plug — F

TELESMART

This cost effective telescopic pillar offers an attractive design for height adjustable desks, tables, chairs and lightweight industrial workstations (**fig. 6**).

The TXG series has an integrated control unit and combines the advantages of AC and DC power.

The pillars can be controlled by using desk, hand or foot switches.

Benefits
- Easy plug and play system
- Powerful and fast lifting
- Aesthetic design
- Cost effective
- Duty cycle 1 min./9 min.

Fig. 6



4

Type	Force push	pull	Max. speed no load	full load	Stroke (S)	Retr. Length (L)	Voltage	Protection class	Weight
	N		mm/s		mm	mm	V	IP	kg
TXG 1	1 500	0	23	17	200–600	S+160/180	24 DC	30	8–13
TXG 4/5	1 500	0	23	17	200–600	S+160/180	120 AC	30	9–14
TXG 8/9	1 500	0	23	17	200–600	S+160/180	230 AC	30	9–14

TELESMART TXG

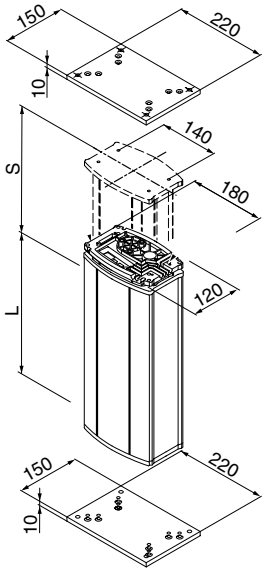

Legend:
S = stroke
L = retracted length

Type	Force push	pull	Max. speed no load	full load	Stroke (S)	Retr. Length (L)	Voltage	Protection class	Weight
	N		mm/s		mm	mm	V	IP	kg
TXG 1	1 500	0	23	17	200–600	S+160/180	24 DC	30	8–13
TXG 4/5	1 500	0	23	17	200–600	S+160/180	120 AC	30	9–14
TXG 8/9	1 500	0	23	17	200–600	S+160/180	230 AC	30	9–14

Type code for accessories

Mains cable	Plug	Country	Order number	Comment
Straight cable 3,5	Euro	General	304330/304345	2-pole/3-pole
Straight cable 3,5	Schuko	DE	304331/304346	2-pole/3-pole
Straight cable 3,5	UL	USA	304332/304347	2-pole/3-pole
Straight cable 3,5	British standard	UK	304333/304355	2-pole/3-pole
Top or bottom mounting plate			304338	

Ordering key

T X G [ ][ ] - 00 [ ] [ ] - [ ] 00

Type

Motor voltage:

24 VDC (slave actuator)	1
120 VAC, 50/60 Hz, class II	4
120 VAC, 50/60 Hz, class I (mandatory for cable feedthrough)	5
230 VAC, 50 Hz, class II	8
230 VAC, 50 Hz, class I (mandatory for cable feedthrough)	9

Output for an additional DC Motor:

Not used (Stand alone)	0
24 VDC (Master, not available for TXG1)	1

Colour:

Natural anodized coating	5

Options (*24 VDC, **230/120 VAC with anti-pinching protection):

None	000
Control connection feedthrough	EYX
Maints cable feedthrough	EYF
Encoder for LD*/slave use*	EYS
Encoder for other controls* (e.g. BCU, VCU, SCU)	EXG
Retract**, memory	2CA
Control connection feedthrough**, mains cable feedthrough**	2AA
Retract**, memory, mains cable feedthrough	3AW
Control connection feedthrough, retract**, memory	3AY
Control connection feedthrough, retract**, memory, mains cable feedthrough	4AG
Extend**, retract**, memory, parallel operation of 2 actuators, min. configuration for master/slave use	4AL
Extend**, retract**, memory, parallel operation of 2 actuators, mains cable feedthroug	5AA
Extend**, retract**, memory, parallel operation of 2 actuators, control connection feedthrough	5AC
Extend**, retract**, memory, parallel operation of 2 actuators, control/mains cable feedthrough	6AA

Stroke (S) / Retr. length (L=S+180):

200 mm	200
300 mm	300
400 mm	400
500 mm	500
600 mm	600

Linear actuators

CAT

The CAT (**fig. 7**) modular design concept makes it easy to interchange critical components such as motors, gears, screws, attachments, etc. Custom built actuators are easily and cost efficiently built from standard parts. The CAT range flexibility makes it suitable for a high number of applications.

Benefits:
- Small
- Robust
- Highly efficient
- Lubricated for service life

Fig. 7



Duty factor diagram

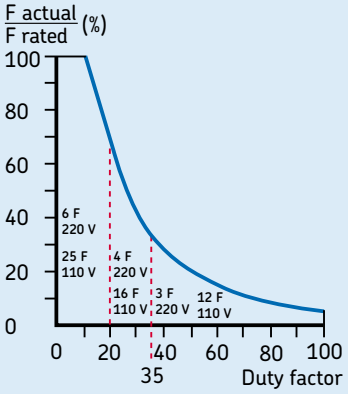

$$\text{Duty factor \%} = \frac{N}{N+R} \times 100$$

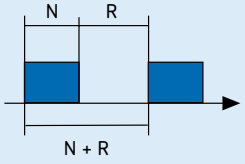

N = running time
R = rest period
N + R = total cycle time

Type	Force push	Force pull	Max. speed no load	Max. speed full load	Stroke (S)	Retr. Length* (L)	Voltage	Protection class	Weight
	N		mm/s		mm	mm	V	IP	kg
CAT 33H	1 200	1 200	174	150	100–400	S + 150/158/189	12/24 DC 120/230/400 AC	20/44/54/65	2–2,7
CAT 33	3 000	3 000	48	38	100–400	S + 150/158/189	12/24 DC 120/230/400 AC	20/44/54/65	2–2,7
CAT 32B	4 000	4 000	67	50	50–700	S + 167/175/206	12/24 DC 120/230/400 AC	20/44/54/65	2–3,5

* Dimension depends on selected front attachment

CAT 33H

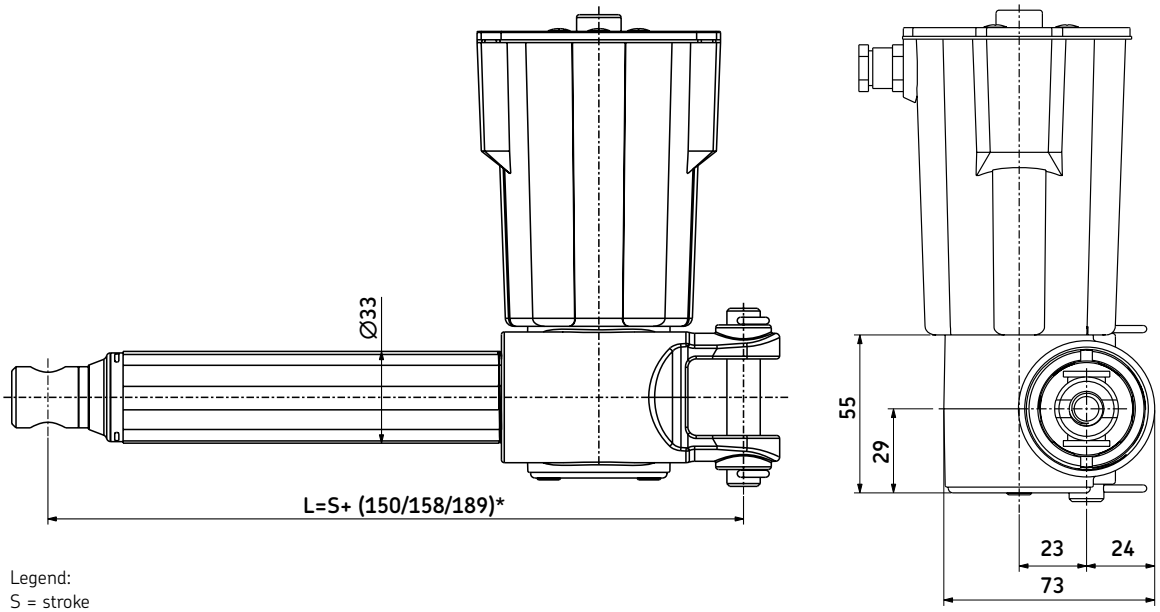

Legend:
S = stroke
L = retracted length

See drawings of front and rear attachments and motor options on page 178

Type	Force push	Force pull	Max. speed no load	Max. speed full load	Stroke (S)	Retr. Length* (L)	Voltage	Protection class	Weight
	N		mm/s		mm	mm	V	IP	kg
CAT 33H	1 200	1 200	174	150	100–400	S+150/158/189	12/24 DC 120/230/400 AC	20/44/65 20/54/55	2–2,7

* Dimension depends on selected front attachment

Ordering key

Dynamic load (N)/Speed (mm/s)			Motor options	
1 200/xx	900/xx	600/xx	No motor	0000
1 000/50-38	600/100-80	400/174-150	12 VDC, IP44 (65)	C12C
1 000/50-38	600/100-80	400/174-150	12 VDC, flat motor, IP44	D12C
1 200/56-36	900/113-79	500/174-140	24 VDC, IP44 (65)	C24C
1 200/27-17	800/60-35	500/100-69	24 VDC, low speed, IP44 (65)	C24CW
1 200/56-36	900/113-79	500/174-140	24 VDC, flat motor, IP44	D24C
1 200/56-36	900/113-79	500/174-140	24 VDC, flat motor, brake, IP20	D24CB
1 200/56-36	900/113-79	500/174-140	24 VDC, flat motor, ext. shaft, IP44	D24CS
1 200/27-17	800/60-35	500/100-69	24 VDC, flat motor, low speed, IP44	D24CW
1 200/20	900/37	500/90	120 VAC/60 Hz, 1-phase, IP54	E110C
1 200/20	900/37	500/90	120 VAC/60 Hz, 1-phase, brake, IP20	E110CB
1 200/20	900/37	500/90	230 VAC/50 Hz, 1-phase, IP54	E220C
1 200/20	900/37	500/90	230 VAC/50 Hz, 1-phase, brake, IP20	E220CB
1 200/20	900/37	500/90	400 VAC/50 Hz, 3-phase, IP55	E380C
1	2	4		

C A T [ ] 33H × [ ] × [ ] [ ] [ ] [ ] [ ] / [ ] [ ]

Type

Motor assembly:
Right R
Left L

Stroke (S):
100 mm 100
200 mm 200
300 mm 300
400 mm 400

Rear attachment (see page 178):
Fork ear, ∅=12,0 mm A1
Fork ear, ∅=12,7 mm A2
Single ear, ∅=12,0 mm K1
Single ear, ∅=12,7 mm K2

Front attachment (see page 178):
Hole, ∅=12,0 mm G1
Hole, ∅=12,7 mm G2
Male thread, M12 G3
Female thread, M12 G4
Fork ear, ∅=10,1 mm G5

Feed back:
No encoder (no code)
Encoder (ony for CxxC motors) E
Encoder (for all standard motors) E2

Options:
Friction clutch F
No friction clutch Z

Options for CxxC motors:
No cable U
EMC filter M
Motor without cover N
IP65 (mandatory to state type of cable T2 or T2P) I
Straight cable, 2,0 m, no plug T2
Straight cable, 2,0 m, jack plug T2P

CAT 33

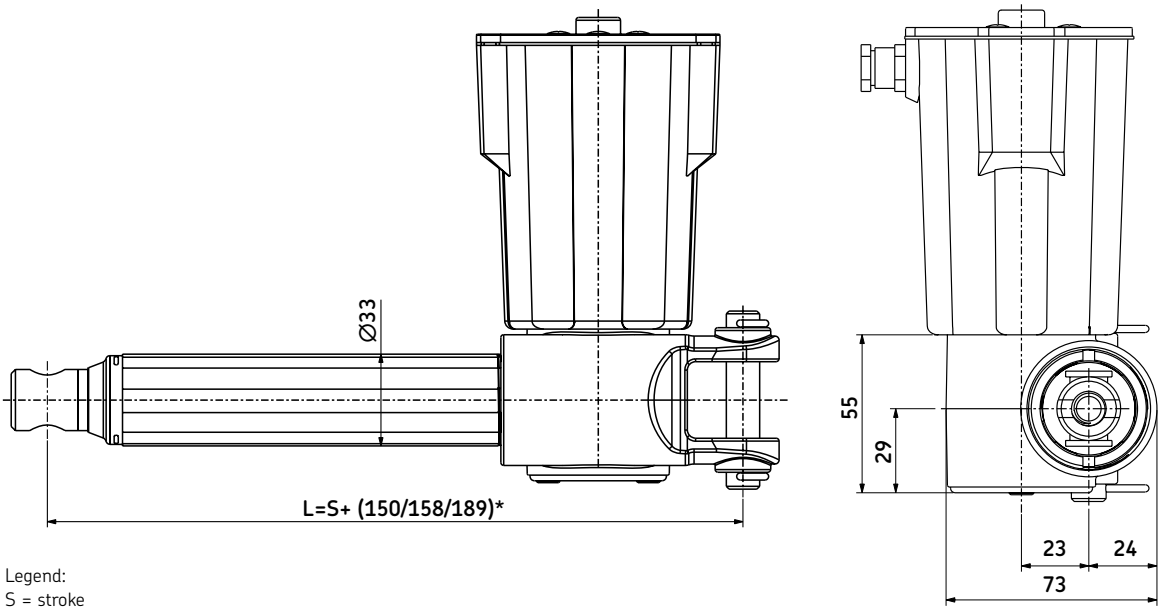

Legend:
S = stroke
L = retracted length

See drawings of front and rear attachments and motor options on page 178

Type	**Force** push	pull	**Max. speed** no load	full load	**Stroke** (S)	**Retr. Length*** (L)	**Voltage**	**Protection class**	**Weight**
	N		mm/s		mm	mm	V	IP	kg
CAT 33	3 000	3 000	48	38	100–400	S + 150/158/189	12/24 DC 120/230/400 AC	20/44/65 20/54/55	2–2,7

* Dimension depends on selected front attachment

Ordering key

Dynamic load (N)/Speed (mm/s)			Motor options	
3 000/xx	2 000/xx	1 000/xx	No motor	0000
3 000/13-10	2 000/24-20	1 000/48-38	12 VDC, IP44 (65)	C12C
2 400/11-7	1 600/21-15	800/39-21	12 VDC, flat motor, IP44	D12C
3 000/13-10	2 000/26-20	1 000/48-35	24 VDC, IP44 (65)	C24C
3 000/7-5	2 000/13-8	1 000/26-19	24 VDC, low speed, IP44 (65)	C24CW
3 000/13-10	2 000/26-20	1 000/48-35	24 VDC, flat motor, IP44	D24C
3 000/13-10	2 000/26-20	1 000/48-35	24 VDC, flat motor, IP44, ext. shaft	D24CS
3 000/7-5	2 000/13-8	1 000/26-19	24 VDC, flat motor, low speed, IP44	D24CW
2 400/6	1 600/12	800/24	120 VAC/60 Hz, 1-phase, IP54	E110C
2 400/6	1 600/12	800/24	120 VAC/60 Hz, 1-phase, brake, IP20	E110CB
3 000/5	2 000/10	1 000/20	230 VAC/50 Hz, 1-phase, IP54	E220C
3 000/5	2 000/10	1 000/20	230 VAC/50 Hz, 1-phase, brake, IP20	E220CB
3 000/5	2 000/10	1 000/20	400 VAC/50 Hz, 3-phase, IP55	E380C
1	2	4		

C A T 33 × × /

Type

Motor assembly:
Right R
Left L

Stroke (S):
100 mm 100
200 mm 200
300 mm 300
400 mm 400

Rear attachment (see page 178):
Fork ear, ∅=12,0 mm A1
Fork ear, ∅=12,7 mm A2
Single ear, ∅=12,0 mm K1
Single ear, ∅=12,7 mm K2

Front attachment (see page 178):
Hole, ∅=12,0 mm G1
Hole, ∅=12,7 mm G2
Male thread, M12 G3
Female thread, M12 G4
Fork ear, ∅=10,1 mm G5

Feed back:
No encoder (no code)
Encoder (ony for CxxC motors) E
Encoder (for all standard motors) E2

Options:
Friction clutch F
No friction clutch Z

Options for CxxC motors:
No cable U
EMC filter M
Motor without cover N
IP65 (mandatory to state type of cable T2 or T2P) I
Straight cable, 2,0 m, no plug T2
Straight cable, 2,0 m, jack plug T2P

CAT 32B

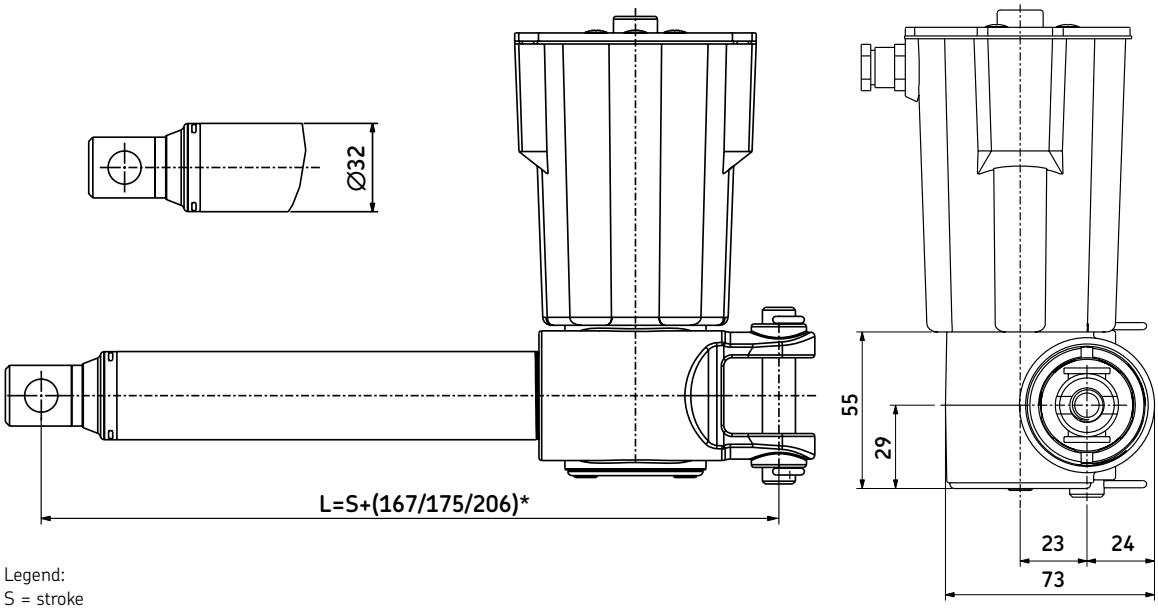

Legend:
S = stroke
L = retracted length

See drawings of front and rear attachments and motor options on page 178

Type	Force push	Force pull	Max. speed no load	Max. speed full load	Stroke (S)	Retr. Length* (L)	Voltage	Protection class	Weight
	N		mm/s		mm	mm	V	IP	kg
CAT 32B	4 000	4 000	67	50	50–700	S + 167/175/206	12/24 DC 120/230/400 AC	20/44/65 20/54/55	2–3,5

* Dimension depends on selected front attachment

Ordering key

Dynamic load (N)/Speed (mm/s)			Motor options	
4 000/xx	2 500/xx	1 500/xx	No motor	0000
4 000/17-12	2 500/32-25	1 500/63-48	12 VDC, IP44 (65)	C12C
3 000/17-11	2 000/34-19	1 000/67-43	12 VDC, flat motor, IP44	D12C
4 000/17-13	2 500/33-24	1 500/65-50	24 VDC, IP44 (65)	C24C
4 000/9-5	2 500/18-10	1 500/34-24	24 VDC, low speed motor, IP44	C24CW
4 000/17-13	2 500/33-24	1 500/65-50	24 VDC, flat motor, IP44	D24C
4 000/17-13	2 500/33-24	1 500/65-50	24 VDC, flat motor, brake, IP20	D24CB
4 000/17-13	2 500/33-24	1 500/65-50	24 VDC, flat motor, ext.shaft, IP44	D24CS
4 000/9-5	2 500/18-10	1 500/34-24	24 VDC, flat motor, low speed, IP44	D24CW
3 500/8	2 500/16	1 500/32	120 VAC/60 Hz, 1-phase, IP54	E110C
3 500/8	2 500/16	1 500/32	120 VAC/60 Hz, 1-phase, brake, IP20	E110CB
3 500/6,5	2 500/13	1 500/26	230 VAC/50 Hz, 1-phase, IP54	E220C
3 500/6,5	2 500/13	1 500/26	230 VAC/50 Hz, 1-phase, brake, IP20	E220CB
3 500/6,5	2 500/13	1 500/26	400 VAC/50 Hz, 3-phase, IP55	E380C
1	2	4		

C A T 32B × × /

Type

Motor assembly:

Right	R
Left	L

Stroke (S):

50 mm	50
100 mm	100
200 mm	200
300 mm	300
400 mm	400
500 mm	500
700 mm	700

Rear attachment (see page 178):

Fork ear, ∅=12,0 mm	A1
Fork ear, ∅=12,7 mm	A2
Single ear, ∅=12,0 mm	K1
Single ear, ∅=12,7 mm	K2

Front attachment (see page 178):

Hole, ∅=12,0 mm	G1
Hole, ∅=12,7 mm	G2
Male thread, M12	G3
Female thread, M12	G4
Fork ear, ∅=10,1 mm	G5

Feed back:

No encoder (no code)	
Encoder (ony for CxxC motors)	E
Encoder (for all standard motors)	E2

Options:

Friction clutch	F
No friction clutch	Z
Back-up ball nut	S

Options for CxxC motors:

No cable	U
EMC filter	M
Motor without cover	N
IP65 (mandatory to state type of cable)	I
Straight cable, 2,0 m, no plug	T2
Straight cable, 2,0 m, jack plug	T2P

Front attachments and retracted length

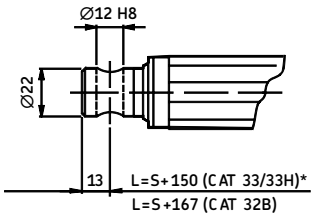

G1

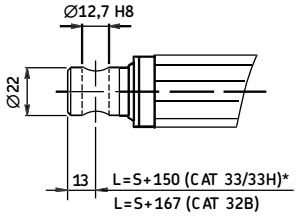

G2

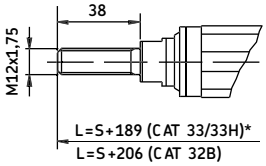

G3

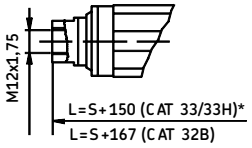

G4

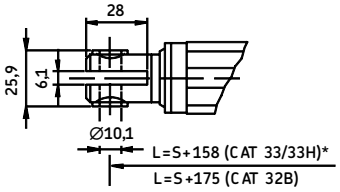

G5

Motors

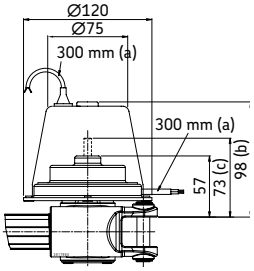

D12C, D24C, D24CB, D24CS, D24CW

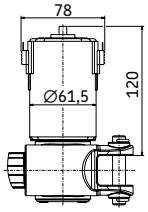

C12CN, C24CN, C24CWN

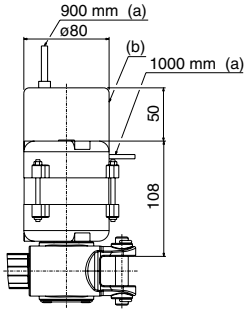

E110C, E110CB, E220C, E220CB

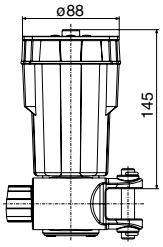

C12CM, C12CME, C24CM, C24CME, C24CWM, C24CWME

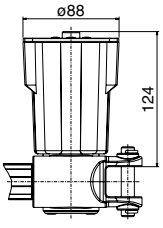

C12C, C24C, C24CW

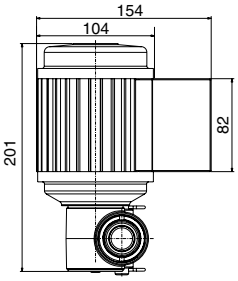

E380C

Rear attachments

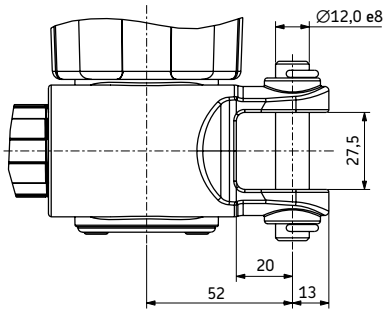

A1

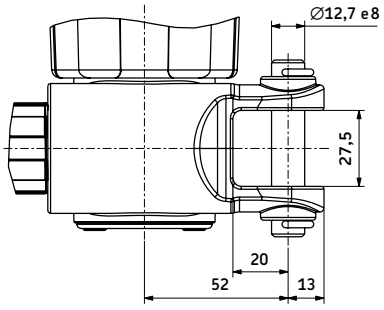

A2

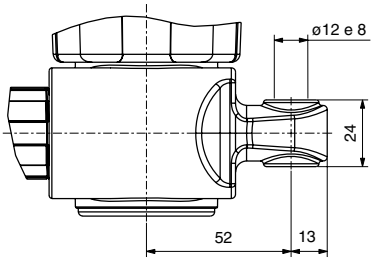

K1

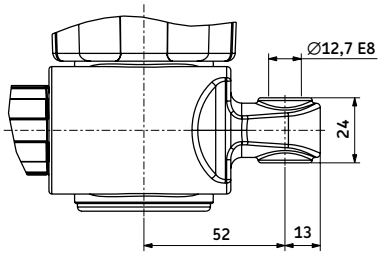

K2

Legend:
(a) = cable length
(b) = cover for brake
(c) = D24CS version
S = stroke
L = retracted length

*If S =400, add 50 mm to retracted length.

CAR

The CAR (**fig. 8**) range of industrial type actuators offers a unique standard of performance, durability, and reliability. The compact design incorporates well-proven parts like the SKF high efficiency ball screw, a sturdy gearbox assembly, and high quality DC and AC-motors. These provide the best performance possible with an extended operational life. Individual application requirements can easily be matched thanks to the modular design concept.

Benefits:
- Robust and reliable
- Long life time
- Wide component range
- Left and right hand versions

Fig. 8



CAR 22, 32, 40 ... 24/12 VDC

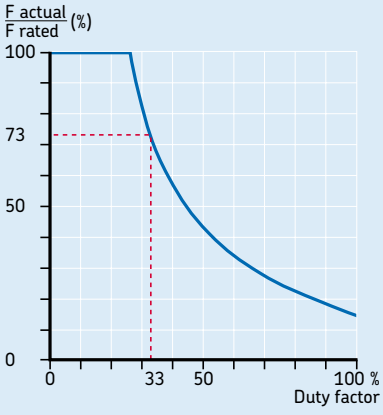

CAR32 ... 230/120 VAC

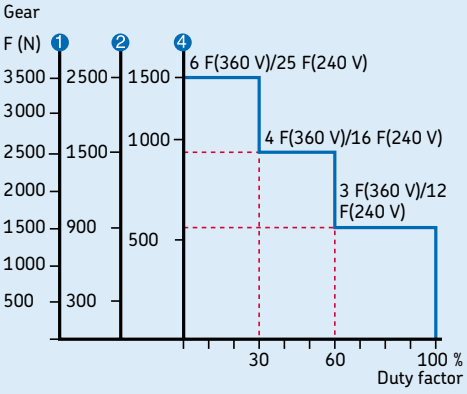

CAR40 ...230/120 VAC

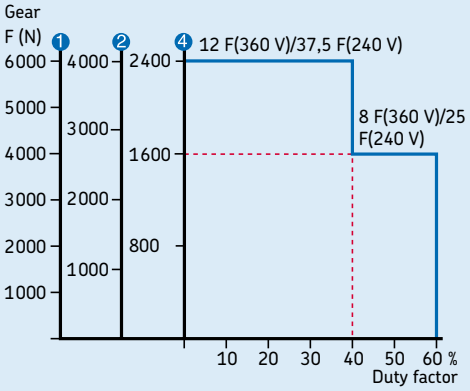

Type	Force push	Force pull	Max. speed no load	Max. speed full load	Stroke (S)	Retr. Length* (L)	Voltage	Protection class	Weight
	N		mm/s		mm	mm	V	IP	kg
CAR 22	1 500	1 500	30	20	50–300	S+205	12/24 DC	44	1,2–1,6
CAR 32	3 500	3 500	60	40	50–700	S+218	12/24 DC 120/230 AC	20/44/54	2,1–3,7
CAR 40	6 000	6 000	60	40	100–700	S+263	12/24 DC 120/230 AC	20/44/54	5,8–8,4

* Dimension depends on selected front attachment

CAR 22

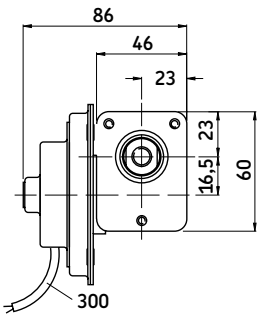

Legend:
S = stroke
L = retracted length

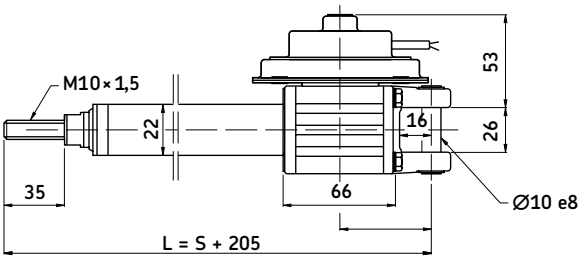

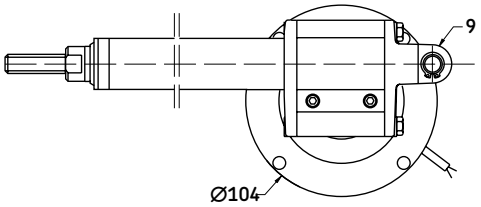

Type	Force push	Force pull	Max. speed no load	Max. speed full load	Stroke (S)	Retr. Length (L)	Voltage	Protection class	Weight
	N		mm/s		mm	mm	V	IP	kg
CAR 22	1 500	1 500	30	20	50–300	S+205	12/24 DC	44	1,2–1,6

Ordering key

Dynamic load (N)/Speed (mm/s)		Motor options	
1 500/xx	1 000/xx	No motor	0000
1 500/15-10	1 000/30-20	12 VDC, flat motor, IP44	D12B
1 500/15-10	1 000/30-20	24 VDC, flat motor, IP44	D24B
1	2		

C A R [ ] 22 × [ ] × [ ] / [ ]

Type

Motor assembly:

Right	R
Left	L

Stroke (S):

50 mm	050
100 mm	100
150 mm	150
200 mm	200
300 mm	300

CAR 32

Legend:
S = stroke
L = retracted length
(a) = cable length
(b) = cover for brake (D24CB)
(c) = D24CS version

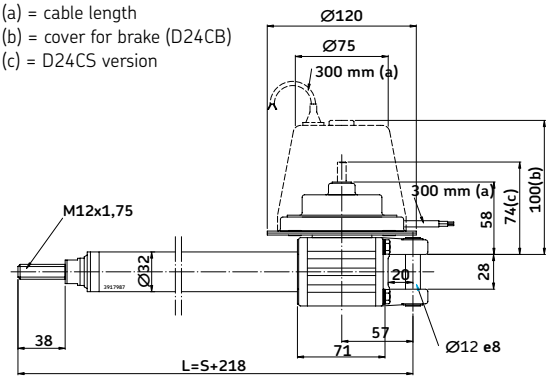

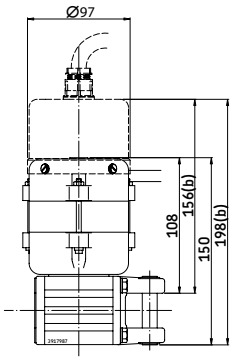

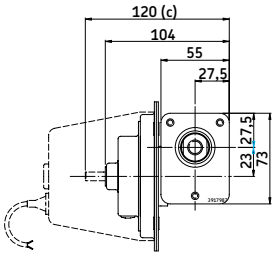

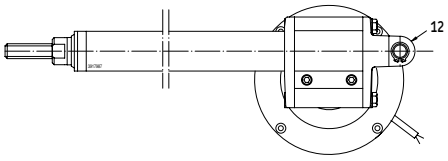

Type	Force push	Force pull	Max. speed no load	Max. speed full load	Stroke (S)	Retr. Length (L)	Voltage	Protection class	Weight
	N		mm/s		mm	mm	V	IP	kg
CAR 32	3 500	3 500	60	40	50–700	S + 218	12/24 DC 120/230 AC	20/44/54	2,1–3,7

Ordering key

Dynamic load (N)/Speed (mm/s)			Motor options	
3 500/xx	2 500/xx	1 500/xx	No motor	0000
2 500/15-10	2 000/30-20	1 000/60-40	12 VDC, flat motor, IP44	D12C
3 500/15-10	2 500/30-20	1 500/60-40	24 VDC, flat motor, IP44	D24C
3 500/9-5	2 500/18-10	1 500/34-24	24 VDC, flat motor, low speed, IP44	D24CW
3 500/15-10	2 500/30-20	1 500/60-40	24 VDC, flat motor, extended shaft, IP44	D24CS
3 500/15-10	2 500/30-20	1 500/60-40	24 VDC, flat motor, brake, IP20	D24CB
3 500/8	2 500/16	1 500/32	120 VAC/60 Hz, 1-phase, IP54	E110C
3 500/8	2 500/16	1 500/32	120 VAC/60 Hz, 1-phase, brake, IP20	E110CB
3 500/6	2 500/13	1 500/26	230 VAC/50 Hz, 1-phase, IP54	E220C
3 500/6	2 500/13	1 500/26	230 VAC/50 Hz, 1- phase, brake, IP20	E220CB
1	2	4		

C A R [ ] 32 × [ ] × [ ] [ ] / [ ]

Type

Motor assembly:
Right R
Left L

Stroke (S):
50 mm 50
100 mm 100
200 mm 200
300 mm 300
500 mm 500
700 mm 700

Options:
Friction clutch F
Back-up nut S

CAR 40

Legend:
S = stroke
L = retracted length

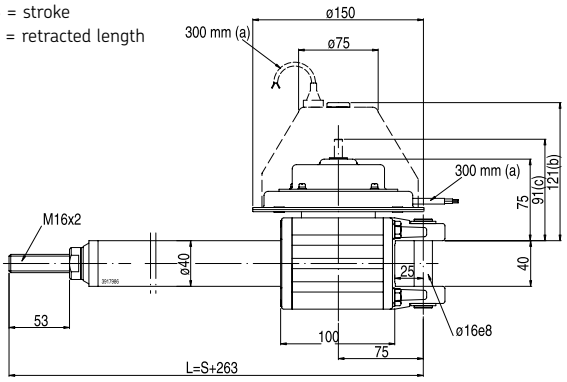

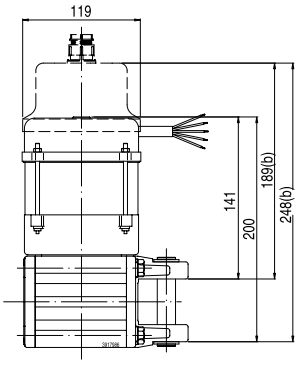

AC motor

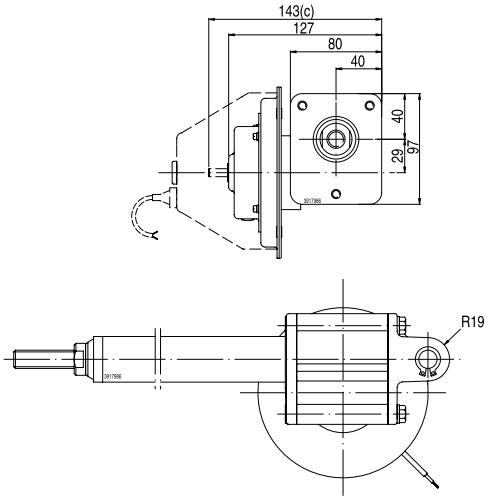

DC motor

Type	Force push	Force pull	Max. speed no load	Max. speed full load	Stroke (S)	Retr. Length (L)	Voltage	Protection class	Weight
	N		mm/s		mm	mm	V	IP	kg
CAR 40	6 000	6 000	60	40	100–700	S + 263	12/24 DC 120/230 AC	20/44/54	5,8–8,4

Ordering key

Dynamic load (N)/Speed (mm/s)			Motor options	
6 000/xx	4 000/xx	2 000/xx	No motor	0000
6 000/15-10	4 000/30-20	2 000/60-40	24 VDC, flat motor, IP44	D24D
6 000/15-10	4 000/30-20	2 000/60-40	24 VDC, flat motor, extended shaft, IP44	D24DS
6 000/15-10	4 000/30-20	2 000/60-40	24 VDC, flat motor, brake, IP20	D24DB
6 000/10	4 000/20	2 000/40	120 VAC/60 Hz, 1-phase, IP54	E110D
6 000/10	4 000/20	2 000/40	120 VAC/60 Hz, 1-phase, brake, IP20	E110DB
6 000/9	4 000/17	2 000/34	230 VAC/50 Hz, 1-phase, IP54	E220D
6 000/9	4 000/17	2 000/34	230 VAC/50 Hz, 1-phase, brake, IP20	E220DB
1	2	4		

C A R [ ] 40 × [ ] × [ ] [ ] / [ ]

Type

Motor assembly:
Right R
Left L

Stroke (S):
100 mm 100
300 mm 300
500 mm 500
700 mm 700

Options:
Friction clutch F
Back-up nut S

MAGFORCE

The MAGFORCE (**fig. 9**) line consists of spindle lifting drives with worm gears. They fulfill the highest demands for industrial and other applications. The drives are available in several different motor versions.

MAGFORCE offers strong, fast and quiet movements with high duty cycle. The drives include many interface options as hall encoder, end switch, extended shaft etc.

Benefits:

- Ideal for heavy load applications
- Wide speed/force range
- Robust design

Fig. 9



Type	Force		Max. speed		Stroke	Retr. Length	Voltage	Protection class	Weight
	push	pull	no load	full load	(S)	(L)			
	N		mm/s		mm	mm	V	IP	kg
WSP 0510	500	500	50	50	100–600	S+230	230 AC	54	5,5
WSP 1030	1 000	1 000	18	18	100–600	S+230	230 AC	54	5,5
WSP 1550	1 500	1 500	10	10	100–600	S+230	230 AC	54	5,5
WSP 2650	2 600	2 600	5	5	100–600	S+230	230 AC	54	5,5
STW 5007	5 000	5 000	12	12	100–600	S+273	230 AC	54	14,6
STW 7010	7 000	7 000	8	8	100–600	S+273	230 AC	54	14,6
STW 10020	10 000	10 000	4	4	100–600	S+273	230 AC	54	14,6
STW 15040	15 000	15 000	2	2	100–600	S+273	230 AC	54	14,6
DSP 1010	1 000	1 000	40	40	100–600	S+230	3×400 AC	54	5,5
DSP 2530	2 500	2 500	15	15	100–600	S+230	3×400 AC	54	5,5
DSP 3250	3 200	3 200	10	10	100–600	S+230	3×400 AC	54	5,5
DSP 4550	4 500	4 500	5	5	100–600	S+230	3×400 AC	54	5,5
STD 10007	10 000	10 000	10	10	100–600	S+273	3×400 AC	54	14,6
SKD 10007	10 000	10 000	25	25	100–600	S+406	3×400 AC	54	14,6
SKD 12010	12 000	12 000	21	21	100–600	S+406	3×400 AC	54	14,6
STD 12010	12 000	12 000	7	7	100–600	S+273	3×400 AC	54	14,6
SKD 15020	15 000	15 000	11	11	100–600	S+406	3×400 AC	54	14,6
SKD 15040	15 000	15 000	5	5	100–600	S+406	3×400 AC	54	14,6
STD 15040	15 000	15 000	2	2	100–600	S+273	3×400 AC	54	14,6
STD 15020	15 000	15 000	4	4	100–600	S+273	3×400 AC	54	14,6
SK(S/A) 15404	15 000	15 000	45	45	100–600	S+465	3×400 AC	54	30,0
SLS 18006	29 000	29 000	70	70	100–600	S+446	3×400 AC	54	48,0
SK(S/A) 20406	20 000	20 000	33	33	100–600	S+465	3×400 AC	54	30,0
SK(S/A) 25412	25 000	25 000	17	17	100–600	S+465	3×400 AC	54	30,0
SK(S/A) 30423	30 000	30 000	9	9	100–600	S+465	3×400 AC	54	30,0
SLS 34013	40 000	40 000	35	35	100–600	S+446	3×400 AC	54	40,0
SLS 50020	50 000	50 000	23	23	100–600	S+446	3×400 AC	54	40,0
SLS 50028	50 000	50 000	16	16	100–600	S+446	3×400 AC	54	40,0
SLS 50050	50 000	50 000	9	9	100–600	S+446	3×400 AC	54	40,0
ASM 1010	1 000	1 000	50	50	100–600	S+230	12/24 DC	44	5,0
ASM 2030	2 000	2 000	17	17	100–600	S+230	12/24 DC	44	5,0
ASM 3030	3 000	3 000	8	8	100–600	S+230	12/24 DC	44	5,0
ASM 4050	4 000	4 000	5	5	100–600	S+230	12/24 DC	44	5,0
SKG 6005	6 000	6 000	55	55	100–600	S+406	24 DC	54	14,6
STG 10007	10 000	10 000	14	14	100–600	S+273	24 DC	54	14,6
SKG 10010	10 000	10 000	30	30	100–600	S+406	24 DC	54	14,6
STG 12010	12 000	12 000	11	11	100–600	S+273	24 DC	54	14,6
SKG 13020	13 000	13 000	15	15	100–600	S+406	24 DC	54	14,6
SKG 15040	15 000	15 000	8	8	100–600	S+406	24 DC	54	14,6
STG 15040	15 000	15 000	3	3	100–600	S+273	24 DC	54	14,6
STG 15020	15 000	15 000	5	5	100–600	S+273	24 DC	54	14,6

Magforce WSP

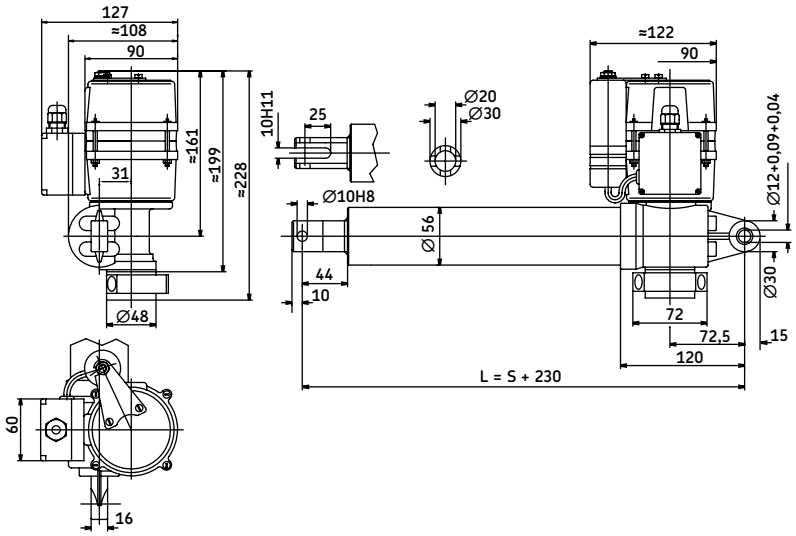

Legend:
S = stroke
L = retracted length

Type	Force push	Force pull	Max. speed no load	Max. speed full load	Stroke (S)	Retr. Length (L)	Voltage	Protection class	Weight
	N		mm/s		mm	mm	V	IP	kg
WSP 0510	500	500	50	50	100–600	S+230	230 AC	54	5,5
WSP 1030	1 000	1 000	18	18	100–600	S+230	230 AC	54	5,5
WSP 1550	1 500	1 500	10	10	100–600	S+230	230 AC	54	5,5
WSP 2650	2 600	2 600	5	5	100–600	S+230	230 AC	54	5,5

Duty cycle 25 %

Accessories	Order number
Free wheel brake on push force	1028,6226
Free wheel brake on pull force	1028,0002
Friction brake for pull/push force	1028,7851
Limit switch	1043,0209

Ordering key

W S P [ ] - [ ] - [ ]

Type

Load:

500 N	0510
1 000 N	1030
1 500 N	1550
2 600 N	2650

Stroke (S):

100 mm	100
200 mm	200
300 mm	300
400 mm	400
500 mm	500
600 mm	600

Customer options:

Standard	01
Additional bushing (L=S+280 mm)	15
Extended shaft	16
Protection tube made out of stainless steel	30
Bronze nut, special grease for –30 °C	91

Magforce ASM

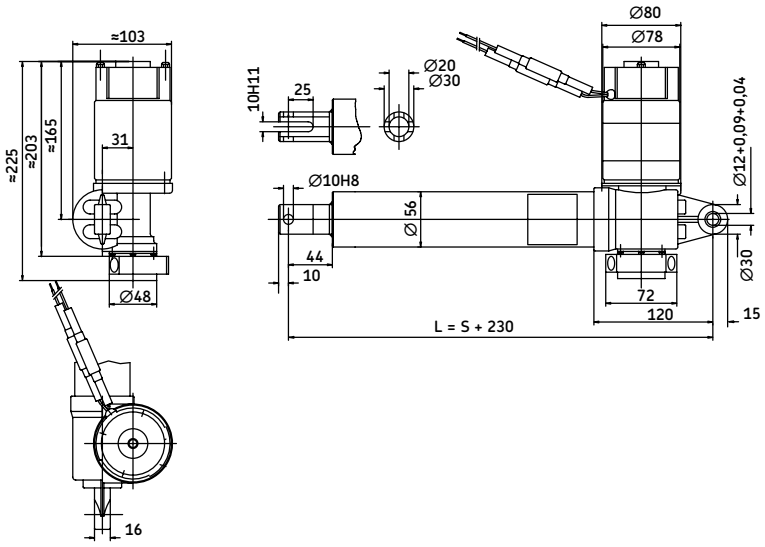

Legend:
S = stroke
L = retracted length

Type	Force push	Force pull	Max. speed no load	Max. speed full load	Stroke (S)	Retr. Length (L)	Voltage	Protection class	Weight
	N		mm/s		mm	mm	V	IP	kg
ASM 1010	1 000	1 000	50	50	100–600	S+230	12/24 DC	44	5
ASM 2030	2 000	2 000	17	17	100–600	S+230	12/24 DC	44	5
ASM 3030	3 000	3 000	8	8	100–600	S+230	12/24 DC	44	5
ASM 4050	4 000	4 000	5	5	100–600	S+230	12/24 DC	44	5

Duty cycle 10 %

Accessories	Order number
Free wheel brake on push force	1028,6226
Free wheel brake on pull force	1028,0002
Friction brake for pull/push force	1028,7851
Limit switch	1043,0210

Ordering key

A S M [ ] - [ ] - [ ]

Type

Load:

1 000 N	1010
2 000 N	2030
3 000 N	3030
4 000 N	4050

Stroke (S):

100 mm	100
200 mm	200
300 mm	300
400 mm	400
500 mm	500
600 mm	600

Customer options:

12 VDC, standard	01
24 VDC, standard	02
24 VDC, additional bushing (L=S+280 mm)	05
24 VDC, bronze nut, special grease for –30 °C	07
24 VDC, protection tube made out of stainless steel	12
24 VDC, extended shaft	16
12 VDC, additional bushing (L=S+280 mm)	19

Magforce DSP

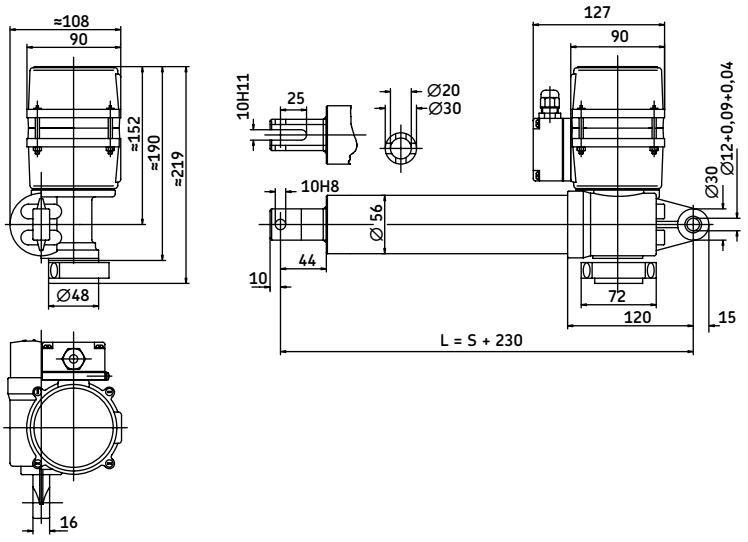

Legend:
S = stroke
L = retracted length

Type	Force push	Force pull	Max. speed no load	Max. speed full load	Stroke (S)	Retr. Length (L)	Voltage	Protection class	Weight
	N		mm/s		mm	mm	V	IP	kg
DSP 1010	1 000	1 000	40	40	100–600	S+230	3×400 AC	54	5,5
DSP 2530	2 500	2 500	15	15	100–600	S+230	3×400 AC	54	5,5
DSP 3250	3 200	3 200	10	10	100–600	S+230	3×400 AC	54	5,5
DSP 4550	4 500	4 500	5	5	100–600	S+230	3×400 AC	54	5,5

Duty cycle 40 %

Accessories	Order number
Free wheel brake on push force	1028,6226
Free wheel brake on pull force	1028,0002
Friction brake for pull/push force	1028,7851
Limit switch	1043,0021

Ordering key

D S P ☐ - ☐ - ☐

Type

Load:

1 000 N	1010
2 500 N	2530
3 200 N	3250
4 500 N	4550

Stroke (S):

100 mm	100
200 mm	200
300 mm	300
400 mm	400
500 mm	500
600 mm	600

Customer options:

Standard	01
Bronze nut, special grease for –30 °C	08
Additional bushing (L=S+280 mm)	09
Protection tube made out of stainless steel	14
Extended shaft	122
ATEX zone 22 (II 3 D T 150 °C)	131

Magforce SKG

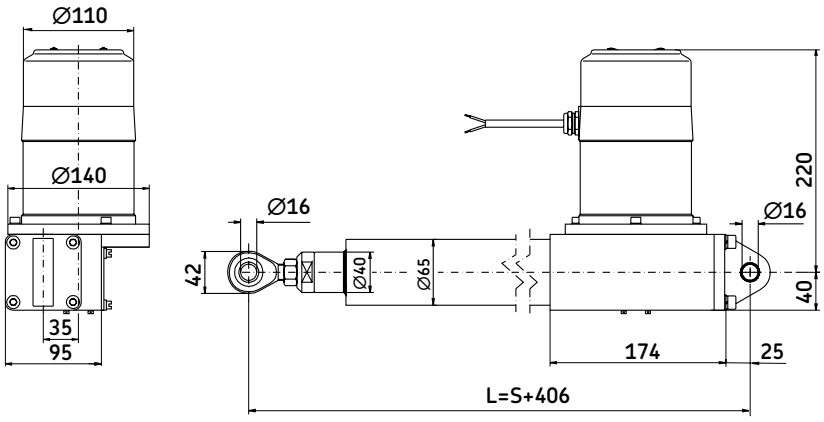

Legend:
S = stroke
L = retracted length

Type	Force push	pull	Max. speed no load	full load	Stroke (S)	Retr. Length (L)	Voltage	Protection class	Weight
	N		mm/s		mm	mm	V	IP	kg
SKG 6005*	6 000	6 000	55	55	100–600	S+406	24 DC	54	14,6
SKG 10010**	10 000	10 000	30	30	100–600	S+406	24 DC	54	14,6
SKG 13020**	13 000	13 000	15	15	100–600	S+406	24 DC	54	14,6
SKG 15040**	15 000	15 000	8	8	100–600	S+406	24 DC	54	14,6

* Duty cycle 30 %
** Duty cycle 10 %

Ordering key

S K G [ ] - [ ] - [ ]

Type

Load:

6 000 N	06005
10 000 N	10010
13 000 N	13020
15 000 N	15040

Stroke (S):

100 mm	100
200 mm	200
300 mm	300
400 mm	400
500 mm	500
600 mm	600

Customer options:

Standard	01

Magforce SKD

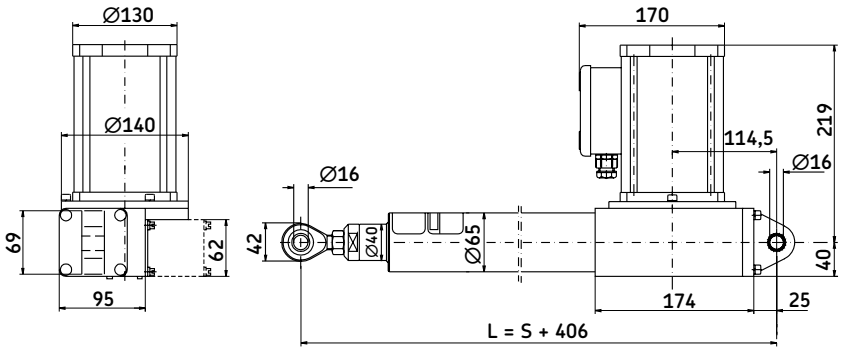

Legend:
S = stroke
L = retracted length

Type	Force push	Force pull	Max. speed no load	Max. speed full load	Stroke (S)	Retr. Length (L)	Voltage	Protection class	Weight
	N		mm/s		mm	mm	V	IP	kg
SKD 10007*	10 000	10 000	25	25	100–600	S+406	3×400 AC	54	14,6
SKD 12010**	12 000	12 000	21	21	100–600	S+406	3×400 AC	54	14,6
SKD 15020**	15 000	15 000	11	11	100–600	S+406	3×400 AC	54	14,6
SKD 15040**	15 000	15 000	5	5	100–600	S+406	3×400 AC	54	14,6

* Duty cycle 25 %
** Duty cycle 10 %

Ordering key

S K D [ ] - [ ] - [ ]

Type

Load / Speed:

10 000 N	10007
12 000 N	12010
15 000 N / 11 mm/s	15020
15 000 N / 5 mm/s	15040

Stroke (S):

100 mm	100
200 mm	200
300 mm	300
400 mm	400
500 mm	500
600 mm	600

Customer options:

Standard	01

Magforce STW

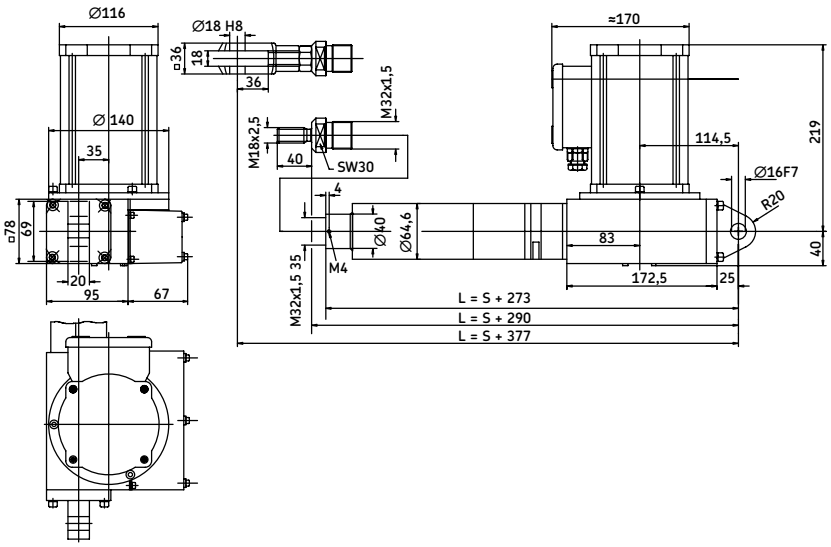

Legend:
S = stroke
L = retracted length

4

Type	Force push	Force pull	Max. speed no load	Max. speed full load	Stroke (S)	Retr. Length (L)	Voltage	Protection class	Weight
	N		mm/s		mm	mm	V	IP	kg
STW 5007*	5 000	5 000	12	12	100–600	S+273	230 AC	54	14,6
STW 7010**	7 000	7 000	8	8	100–600	S+273	230 AC	54	14,6
STW 10020**	10 000	10 000	4	4	100–600	S+273	230 AC	54	14,6
STW 15040**	15 000	15 000	2	2	100–600	S+273	230 AC	54	14,6

* Duty cycle 15 %
** Duty cycle 10 %

Ordering key

S T W [ ] - [ ] - [ ]

Type

Load:

5 000 N	05007
7 000 N	07010
10 000 N	10020
15 000 N	15040

Stroke (S):

100 mm	100
200 mm	200
300 mm	300
400 mm	400
500 mm	500
600 mm	600

Customer options:

Standard	01
Limit switch	05
Low temperature grease	08

Magforce STG

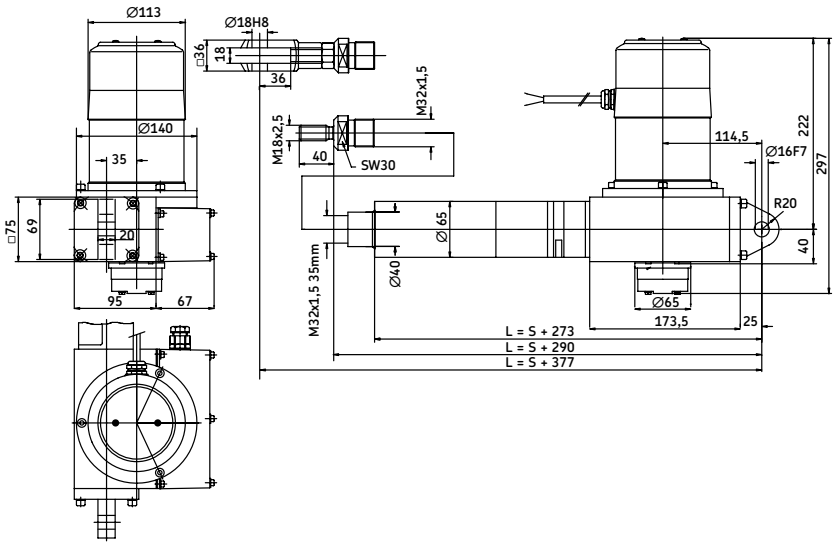

Legend:
S = stroke
L = retracted length

Type	Force push	Force pull	Max. speed no load	Max. speed full load	Stroke (S)	Retr. Length (L)	Voltage	Protection class	Weight
	N		mm/s		mm	mm	V	IP	kg
STG 10007	10 000	10 000	14	14	100–600	S+273	24 DC	54	14,6
STG 12010	12 000	12 000	11	11	100–600	S+273	24 DC	54	14,6
STG 15040	15 000	15 000	3	3	100–600	S+273	24 DC	54	14,6
STG 15020	15 000	15 000	5	5	100–600	S+273	24 DC	54	14,6

Duty cycle 10 %

Ordering key

S T G [ ] - [ ] - [ ]

Type

Load / Speed:

10 000 N	10007
12 000 N	12010
15 000 N / 5 mm/s	15020
15 000 N / 3 mm/s	15040

Stroke (S):

100 mm	100
200 mm	200
300 mm	300
400 mm	400
500 mm	500
600 mm	600

Customer options:

Standard	01

Magforce STD

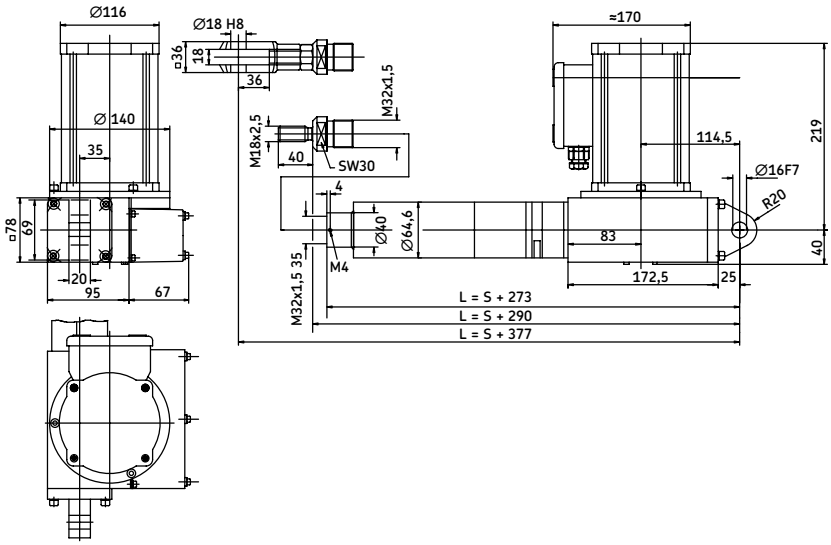

Legend:
S = stroke
L = retracted length

Type	Force push	Force pull	Max. speed no load	Max. speed full load	Stroke (S)	Retr. Length (L)	Voltage	Protection class	Weight
	N		mm/s		mm	mm	V	IP	kg
STD 10007*	10 000	10 000	10	10	100–600	S+273	3×400 AC	54	14,6
STD 12010**	12 000	12 000	7	7	100–600	S+273	3×400 AC	54	14,6
STD 15040**	15 000	15 000	4	4	100–600	S+273	3×400 AC	54	14,6
STD 15020**	15 000	15 000	2	2	100–600	S+273	3×400 AC	54	14,6

* Duty cycle 25 %
** Duty cycle 10 %

Ordering key

S T D [ ] - [ ] - [ ]

Type

Load / Speed:

10 000 N	10007
12 000 N	12010
15 000 N / 4 mm/s	15020
15 000 N / 2 mm/s	15040

Stroke (S):

100 mm	100
200 mm	200
300 mm	300
400 mm	400
500 mm	500
600 mm	600

Customer options:

Standard	01
Extended shaft	11
Back-up nut on push	13
Low temperature grease	19
Back-up nut on push and pull	34

Magforce SKS/SKA

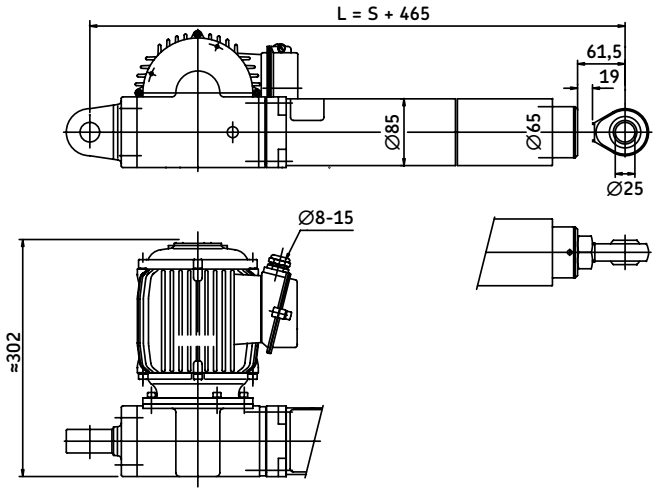

Legend:
S = stroke
L = retracted length

Type	Force push	Force pull	Max. speed no load	Max. speed full load	Stroke (S)	Retr. Length (L)	Voltage	Protection class	Weight
	N		mm/s		mm	mm	V	IP	kg
SK(S/A) 15404	15 000	15 000	45	45	100–600	S+465	3×400 AC	54	30
SK(S/A) 20406	20 000	20 000	33	33	100–600	S+465	3×400 AC	54	30
SK(S/A) 25412	25 000	25 000	17	17	100–600	S+465	3×400 AC	54	30
SK(S/A) 30423	30 000	30 000	10	10	100–600	S+465	3×400 AC	54	30

Duty cycle 10 %

Ordering key

S K [ ] [ ] - [ ] - [ ]

Type

Option:
No option — S
With limit switches and/or potentiometer — A

Load:
15 000 N — 15404
20 000 N — 20406
25 000 N — 25412
30 000 N — 30423

Stroke (S):
100 mm — 100
200 mm — 200
300 mm — 300
400 mm — 400
500 mm — 500
600 mm — 600

Customer options:
Standard — 01

Magforce SLS

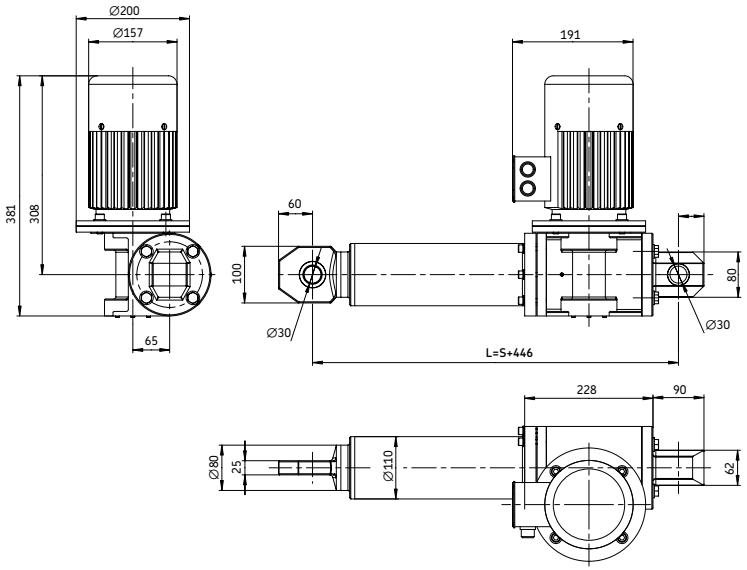

Legend:
S = stroke
L = retracted length

Type	Force push	Force pull	Max. speed no load	Max. speed full load	Stroke (S)	Retr. Length (L)	Voltage	Protection class	Weight
	N		mm/s		mm	mm	V	IP	kg
SLS 18006	18 000	18 000	70	70	100–600	S+446	3×400 AC	54	40,0
SLS 34013	34 000	34 000	35	35	100–600	S+446	3×400 AC	54	40,0
SLS 50020	50 000	50 000	23	23	100–600	S+446	3×400 AC	54	40,0
SLS 50028	50 000	50 000	16	16	100–600	S+446	3×400 AC	54	40,0
SLS 50050	50 000	50 000	9	9	100–600	S+446	3×400 AC	54	40,0

Duty cycle 10 %

Ordering key

S	L	S				

Type

Load:

18 000 N	180
34 000 N	340
50 000 N	500

Speed at no load:

70 mm/s, only for load version 180	06
35 mm/s, only for load version 340	13
23 mm/s, only for load version 500	20
16 mm/s, only for load version 500	28
9 mm/s, only for load version 500	50

Stroke (S):

100 mm	100
200 mm	200
300 mm	300
400 mm	400
500 mm	500
600 mm	600

Customer options:

Standard	01

CALA 36A

CALA 36A (**fig. 10**) is a compact 12/24 V DC actuator, intended for industrial use. The motor and drive spindle are connected in-line through a planetary gear assembly. This makes the compact design suitable in applications where space is restricted. A comprehensive range of suitable SKF control systems is available.

Benefits:
- 600 N load capacity
- 12 or 24 VDC
- Compact design
- Lubricated for service life
- Corrosion-resistant design
- High operating reliability
- Selection of front attachments
- Limit switches as accessories

Fig. 10



Technical data	Unit
Max. dynamic load:	600 N
Static load:	1 000 N
Speed:	23–12 mm/s
Supply voltage:	12 or 24 VDC
Current consumption:	0,5 to 4,4 A (12 V DC) 0,25 to 2,2 A (24 V DC)
Duty factor:	5 % at max. dynamic load
Protection class:	IP44
Standard:	EN 50 081–1
Temperature range:	0 °C to + 50 °C
Weight:	0,9 to 1,4 kg

Performance diagram

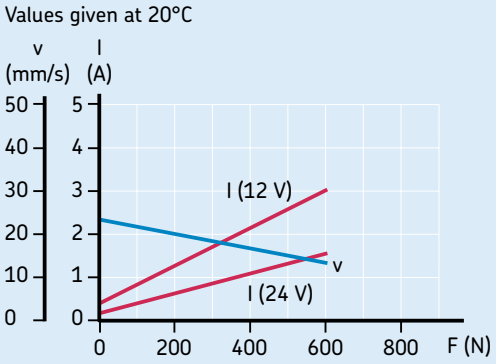

Type	Force push	Force pull	Max. speed no load	Max. speed full load	Stroke (S)	Retr. Length* (L)	Voltage	Protection class	Weight
	N		mm/s		mm	mm	V DC	IP	kg
CALA 36A	600	600	23	12	50–200	S + 215/226/257	12/24	44	0,9–1,4

* Dimension depends on selected front attachment

CALA 36A

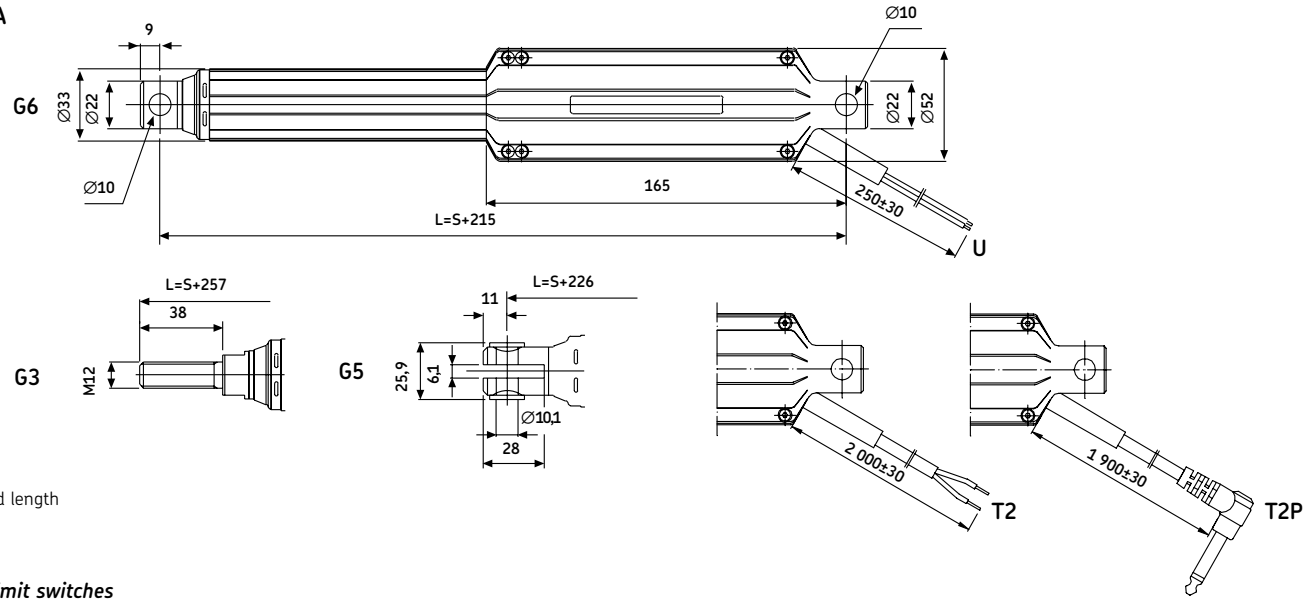

Legend:
S = stroke
L = retracted length

CAXC 33 limit switches

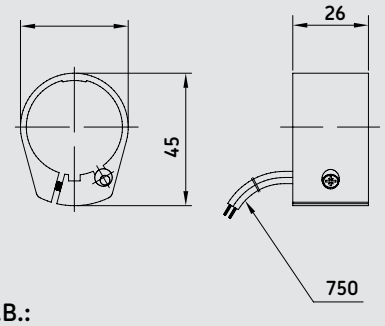

N.B.:
Reduces the effective stroke length by approx. 20 mm. To be ordered separately.
*More information on **page 228***

Ordering key

C	A	L	A	3	6	A	×		×	4		/		

Type

Stroke (S):

50 mm	050
100 mm	100
150 mm	150
200 mm	200
50 mm<S<200 mm	---

Front attachment:

Male thread, M12	G3
Fork end, Ø=10,1 mm	G5
Hole, Ø=10,0 mm	G6

Motor voltage:

12 VDC	D12
24 VDC	D24

Cable:

Straight 0,25 m, no plug	U
Straight 1,9 m, jack plug	T2
Straight 1,9 m, no plug	T2P

MATRIX

The MATRIX (**fig. 11**) series includes powerful AC and DC actuators. They run very quietly, take up little space and can be installed at virtually every angle in vertical or horizontal position.

Benefits
- Long service life
- Silent operation
- Full system with control, operating units and accessories
- Synchronization possible
- Compact and aesthetic
- Back-up nut in standard
- Duty cycle 1 min./9 min.

Fig. 11



Type	Force		Max. speed		Stroke	Retr. Length*	Voltage	Protection class***	Weight
	push	pull	no load	full load	(S)	(L)			
	N		mm/s		mm	mm	V	IP	kg
MAX1.-A	4 000	4 000	7	5	50 – 700	S + 195*	24 DC	66S	4,0
MAX1.-B	2 000	2 000	9	6	50 – 700	S + 195*	24 DC	66S	3,7
MAX1.-C	1 500	1 500	18	13	50 – 700	S + 195*	24 DC	66S	3,6
MAX3.-A	8 000	6 000	7	5	50 – 700	S + 215**	24/12 DC	66S	4,5
MAX3.-B	4 000	4 000	9	6	50 – 700	S + 215**	24/12 DC	66S	4,2
MAX3.-C	3 000	3 000	18	13	50 – 700	S + 215**	24/12 DC	66S	4,0
MAX6.-A	8 000	6 000	8	6	50 – 700	S + 215**	120/230 AC	66S	4,8
MAX6.-B	4 000	4 000	10	8	50 – 700	S + 215**	120/230 AC	66S	4,5
MAX6.-C	3 000	3 000	18	15	50 – 700	S + 215**	120/230 AC	66S	4,2

* If stroke < 350 mm: L=S+260 mm
** If stroke > 350 mm: L=S+280 mm
*** Protection class is valid for static conditions. For outdoor applications please contact SKF

Type code for accessories

Mains cable	Plug	Country	Order N°	Comment
Straight cable 3,5 m	Schuko	DE	ZKA-140306–3500	
Straight cable 3,5 m	SEV	CH	ZKA-140316–3500	
Straight cable 3,5 m	UL	USA	ZKA-140355–3500	
Straight cable 3,5 m	Hospital grade	USA	ZKA-140360–3500	
Straight cable 3,5 m	British standard	UK	ZKA-140350–3500	
Coiled cable 1,2 m /2,2 m	Schuko	DE	ZKA-140342–1500	
Coiled cable 1,2 m /2,2 m	SEV	CH	ZKA-140378–1200	
Straight cable 3,5 m	SEV	CH	ZKA-140426–3500	Polyurethane cable
Straight cable 3,5 m	Schuko	DE	ZKA-140426–3500	Polyurethane cable
Strain relief for mains cable			ZUB–952253	
Tool for plugs (Jack/D-Sub/Mains)			140375	
Operating device adaptor (D-Sub 9-pole)			140420	

MAX1

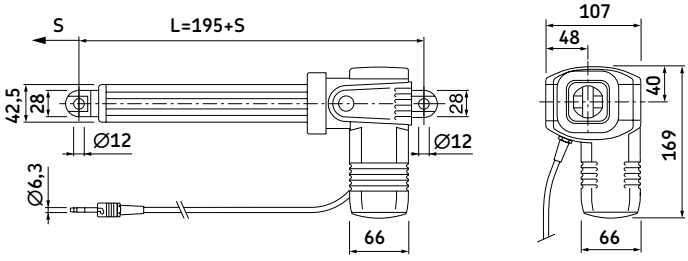

Legend:
S = stroke
L = retracted length

Ordering key

M	A	X	1		-				A						000

Type

Motor voltage:

24 VDC	0
24 VDC with integrated current cut-off	1

Load:

4 000 N	A
2 000 N	B
1 500 N	C

Stroke (S):

50 mm	050 245
100 mm	100 295
150 mm	150 345
200 mm	200 395
250 mm	250 445
300 mm	300 495
350 mm	350 545
400 mm	400 660
450 mm	450 710
500 mm	500 760
550 mm	550 810
600 mm	600 860
650 mm	650 910
700 mm	700 960

Colour:

Grey	A

Cable/Connecting plug:

Straight, 2,5 m, DIN8 plug	C5

Orientation of rear attachment:

No fork head (customized option)	0
Standard (as drawing)	1
Turned 90°	2

Options 1:

No option, only valid for actuator "A"	0
Quick-release +EKZm, push, fork head bore parallel to button (for actuator design "C" is L=+115 mm)*	E
Quick-release +EKZm , push, fork head bore parallel to Bowden cable (for actuator design "C" is L=+115 mm)*	G
Mechanical anti-pinching protection, pull, no fixing in term. position (for actuator design "A" is L=+45 mm, "B" and "C" is L=+30 mm)	I
Mechanical anti-pinching protection, push, no fixing in term. position (for actuator design "A" is L=+45 mm, "B" and "C" is L=+30 mm)	J
Push force, for actuator version "B" and "C"	M
Pull force, for actuator version "B" and "C"	N

*Min. stroke: 150 mm up to 300 mm; EKZm: mechanical anti-pinching

Options 2:

No option	0
Single encoder, 8 pulses (not possible with electrical anti-pinching protection), jack plug	A
Dual encoder, DIN8 plug	F

Options 3:

No option	-
Emergency lowering, fork head bore parallel to clamping lever (for actuator design "A", L+30 mm)	V

MAX3

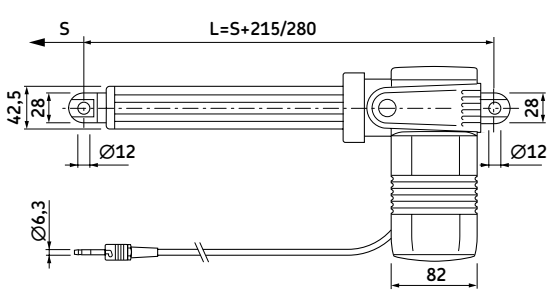

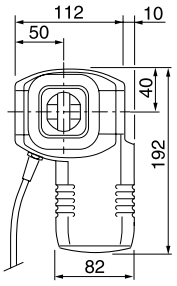

Legend:
S = stroke
L = retracted length

Ordering key

M	A	X	3		-				A						000

Type

Motor voltage:

24 VDC	0
12 VDC	2

Load:

8 000 N	A
4 000 N	B
3 000 N	C

Stroke (S):

50 mm	050 265
100 mm	100 315
150 mm	150 365
200 mm	200 415
250 mm	250 465
300 mm	300 515
350 mm	350 565
400 mm	400 680
450 mm	450 730
500 mm	500 780
550 mm	550 830
600 mm	600 880
650 mm	650 930
700 mm	700 980

Colour:

Grey	A

Cable/Connecting plug:

Straight, 2,5 m, DIN8 plug	C5

Orientation of rear attachment:

No fork head (customized option)	0
Standard (as drawing)	1
Turned 90°	2

Options 1:

No option, only valid for actuator “A”	0
Quick-release +EKZm, push, fork head bore parallel to button (for actuator design “C” is L=+115 mm)*	E
Quick-release +EKZm, push, fork head bore parallel to Bowden cable (for actuator design “C” is L=+115 mm)*	G
Mechanical anti-pinching protection, pull, no fixing in term. position (for actuator design “A” is L=+45 mm, “B” and “C” is L=+30 mm)	I
Mechanical anti-pinching protection, push, no fixing in term. position (for actuator design “A” is L=+45 mm, “B” and “C” is L=+30 mm)	J
Electrical anti-pinching protection (safety switch device), pull	K
Electrical anti-pinching protection (safety switch device), push	L
Push force, for actuator version “B” and “C”	M
Pull force, for actuator version “B” and “C”	N

*Min. stroke: 150 mm up to 300 mm; EKZm: mechanical anti-pinching

Options 2:

No option	0
Single encoder, 8 pulses (not possible with electrical anti-pinching protection), jack plug	A
Dual encoder, DIN8 plug	F

Options 3:

No option	-
Emergency lowering, fork head bore parallel to clamping lever (for actuator design “A”, L+30 mm)	V

MAX6

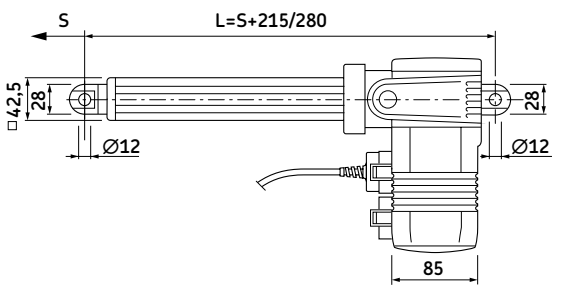

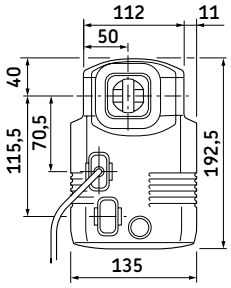

Legend:
S = stroke
L = retracted length

Ordering key

M	A	X	6		-				A				0		000

Type

Motor voltage:

230 VAC/50 Hz, integrated pneumatic control	0
120 VAC/60 Hz, integrated pneumatic control	1
230 VAC/50 Hz, integrated low voltage control with additional 24 V output	2
120 VAC/60 Hz, control +1 channel with additional 24 V output	3
230 VAC/50 Hz, integrated low voltage	4
120 VAC/60 Hz, control	5

Load:

8 000 N	A
4 000 N	B
3 000 N	C

Stroke (S):

50 mm	050 265
100 mm	100 315
150 mm	150 365
200 mm	200 415
250 mm	250 465
300 mm	300 515
350 mm	350 565
400 mm	400 680
450 mm	450 730
500 mm	500 780
550 mm	550 830
600 mm	600 880
650 mm	650 930
700 mm	700 980

Colour:

Grey	A

Cable/Connecting plug:

No cable	0

Orientation of rear attachment:

Standard (as drawing)	1

Options 1:

No option, only valid for actuator “A”	0
Quick-release +EKZm, push, fork head bore parallel to button (for actuator design “C” is L=+115 mm)*	E
Quick-release +EKZm, push, fork head bore 90° to button (for actuator design “C” is L=+115 mm)*	F
Quick-release +EKZm, push, fork head bore parallel to Bowden cable (for actuator design “C” is L=+115 mm)*	G
Quick-release +EKZm, push, fork head bore 90° to Bowden cable (for actuator design “C” is L=+115 mm)*	H
Mechanical anti-pinching protection, pull, no fixing in term. position (for actuator design “A” is L=+45 mm, “B” and “C” is L=+30 mm)	I
Mechanical anti-pinching protection, push, no fixing in term. position (for actuator design “A” is L=+45 mm, “B” and “C” is L=+30 mm)	J
Electrical anti-pinching protection (safety switch device), pull	K
Electrical anti-pinching protection (safety switch device), push	L
Push force, for actuator version “B” and “C”	M
Pull force, for actuator version “B” and “C”	N

*Min. stroke: 150 mm up to 300 mm; EKZm: mechanical anti-pinching

Options 2:

No option	0

Options 3:

No option	-
Emergency lowering, fork head bore parallel to clamping lever (for actuator design “A”, L+30 mm)	V

CARE 33

Efficient design allows the CARE 33 (**fig. 12**) actuators a high dynamic load capacity, silent operation and low current consumption. The gearbox is allowed to float so that the load path passes directly through a support bearing located in the rear attachment. This design offers long operational life and minimizes the transmitted noise level. The CARE 33 actuator system offers a wide range of extra features such as power saving, overload protection, transformer cut-off, infrared remote control and CAXC limit switches.

Since the motor is capable of generating greater torque than required to produce the rated thrust, our selected control units are configured to ensure proper function.

Benefits
- Silent operation
- Multiple speed/load variants
- Easy to adjust limit switches
- Different attachment options

Fig. 12



Legend:
S = stroke
L = retracted length

* Dimension depends on selected front attachment

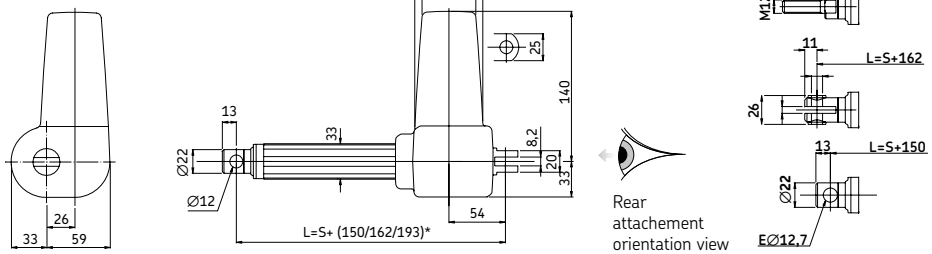

Technical data	CARE 33A	CARE 33M	CARE 33H
Max. dynamic load:	2 000 N	1 400 N	800 N
Max. static load:	6 000 N	3 000 N	3 000 N
Stroke length:	50–300 mm	50–500 mm	50–500 mm
Speed:	8–12 mm/s	16–22 mm/s	32–45 mm/s
Mains supply voltage:	12 VDC or 24 VDC	12 VDC or 24 VDC	12 VDC or 24 VDC
Max. power consumption:	12 VDC/8 A, 24VDC/3,5 A	12 VDC/8 A, 24 VDC/3,5 A	12 VDC/8 A, 24 VDC/3,5 A
Duty factor:	20 % at 2 000 N	20 % at 1 400 N	20 % at 800 N
Cable:	Coiled or straight, 2,0 m	Coiled or straight, 2,0 m	Coiled or straight, 2,0 m
Connection plug:	DIN 8-pole	DIN 8-pole	DIN 8-pole
	Jack plug	Jack plug	Jack plug
No connector:	6 lead cable for encoder	6 lead cable for encoder	6 lead cable for encoder
	2 lead cable	2 lead cable	2 lead cable
Encoder:	Hall-effect element	Hall-effect element	Hall-effect element
Protection class:	IP44 or IP65	IP44 or IP65	IP44 or IP65
Housing material:	Polyamide PA–6	Polyamide PA–6	Polyamide PA–6
Manufactured acc. to:	EN 55 014, EN 55 011	EN 55 014, EN 55 011	EN 55 014, EN 55 011

Type	Force push	Force pull	Max. speed no load	Max. speed full load	Stroke (S)	Retr. Length* (L)	Voltage	Protection class	Weight
	N		mm/s		mm	mm	V DC	IP	kg
CARE 33H	800	800	45	32	50 – 500	S+150/162/193	12 – 24	44/65	1,5 – 2,4
CARE 33M	1 400	1 400	22	16	50 – 500	S+150/162/193	12 – 24	44/65	1,5 – 2,4
CARE 33A	2 000	2 000	12	8	50 – 300	S+150/162/193	12 – 24	44/65	1,5 – 2,0

* Dimension depends on selected front attachment

Ordering key

C A R E 3 3 [ ] [ ] [ ] [ ] [ ] [ ] [ ] [ ] [ ]

Type

Load:

2 000 N	A
1 400 N	M
800 N	H

Stroke (S):

50 mm	050
100 mm	100
150 mm	150
200 mm	200
300 mm	300
400 mm (not possible for CARE 33A)	400
500 mm (not possible for CARE 33A)	500

Front attachment:

Hole, ∅=12,0 mm	1
Hole, ∅=12,7 mm	2
Hole 10 mm, slot 6,1 mm (retracted length, L=S+162 mm)	3
Male thread M12 (retracted length, L=S+193 mm)	4

Rear attachment:

Hole, ∅=12,0 mm	1
Hole, ∅=12,7 mm	2
Hole, ∅=8,0 mm	3
Hole, ∅=10,0 mm	4

Protection class:

IP65	1
IP44	2

Feedback:

No option	0
Dual encoder	1

Cable/Connection plug:

Straight, 2,0 m, no connector	1
Coiled, 2,0 m, jack plug	2
Straight, 2,0 m, DIN 8 plug (for 2-channel encoder)	3
Straight, 2,0 m, jack plug	5

Orientation of rear attachment:

0°	000
15° clockwise	015
30° clockwise	030
45° clockwise	045
60° clockwise	060
75° clockwise	075
90° clockwise	090
105° clockwise	105
120° clockwise	120
130° clockwise	130
150° clockwise	150
165° clockwise	165

Motor voltage:

24 VDC	24
12 VDC	12

Self locking feature (mandatory when selecting load/speed version “H” or “M”):

No self locking required	0
Self locking for pull force	1
Self locking for push force	2

IMD3 series (fig. 13)

Features / Benefits
- Ambient temperature –15 °C to +65 °C
- Lubrication for longer lifetime
- Extension tube (aluminium)
- Protection tube (aluminium)
- Zinc alloy housing
- Powder metal gears
- Integrated limit switches
- Duty cycle 25 %
- Protection class IP65
- ACME screw drive
- Self-locking

Options
- Potentiometer (10 KΩ/10 turns)
- Thermal protector in motor

Fig. 13



Performance diagram: (load versions; "05", "10", "20" "30" and "40" - see ordering key on next page)

Speed vs Load (force)

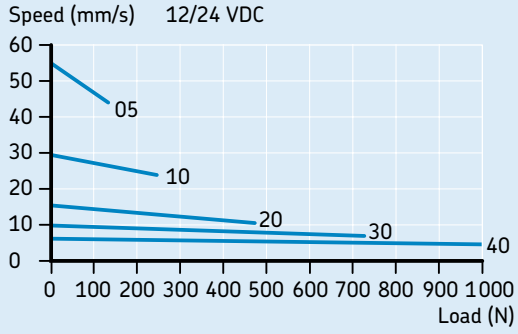

Current vs Load (force)

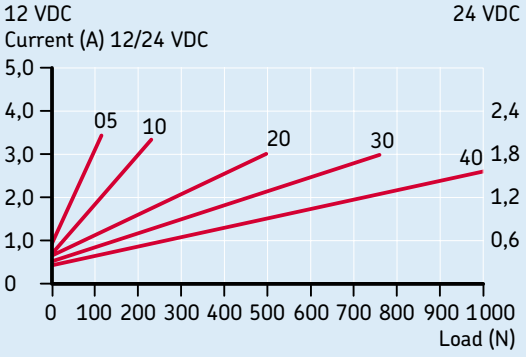

Type	Force** push	Force** pull	Max. speed no load	Max. speed full load	Stroke (S)	Retr. Length* (L)	Voltage	Protection class	Weight
	N		mm/s		mm	mm	V DC	IP	kg
IMD3 05	120	120	57	45	50 – 300	–*	12 – 24	65	1,5
IMD3 10	240	240	30	24	50 – 300	–*	12 – 24	65	1,5
IMD3 20	500	500	16	13	50 – 300	–*	12 – 24	65	1,5
IMD3 30	750	750	10	8	50 – 300	–*	12 – 24	65	1,5
IMD3 40	1 000	1 000	8	6	50 – 300	–*	12 – 24	65	1,5

* See table on below
** Max. static load is 2 500 N

Dimensions in mm*

Stroke	50	100	150	200	250	300
Retracted length (L_1)	158	209	260	311	362	413
Retracted length (L_2)	192	243	294	345	396	447

* Tolerance: S, L_1 and L_2: ± 2,0 mm

IMD3 series

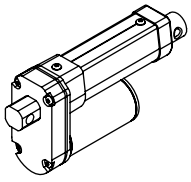

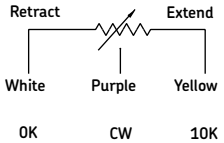

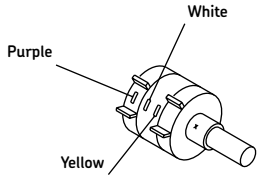

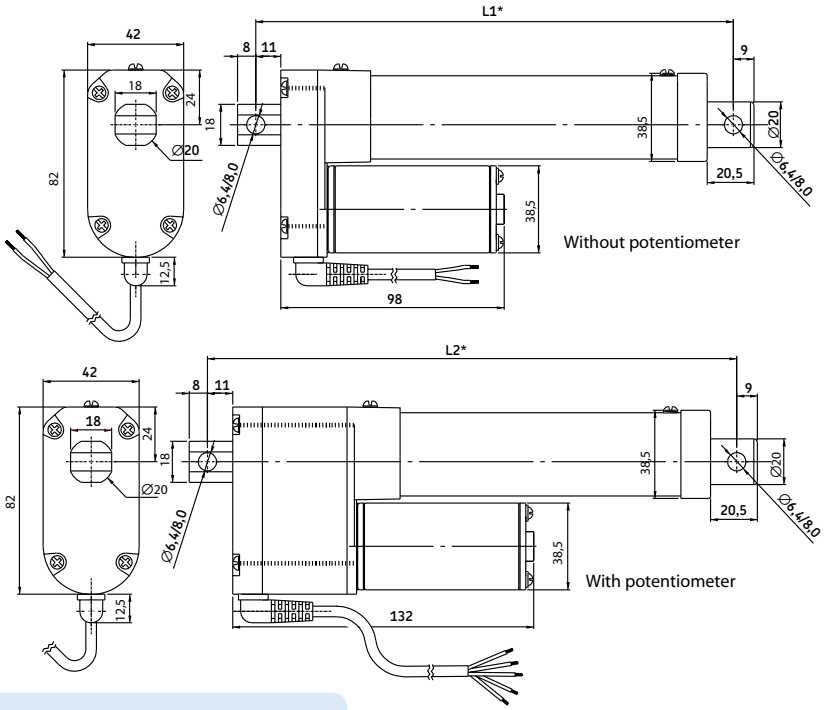

Potentiometer resolution						
Stroke	50	100	150	200	250	300
Ohm/mm	94,4	94,4	47,2	47,2	15,72	15,72

Ordering key

IMD3 - □□ - □□ - A - □□□ - □ - 65 - □ 06

Type

Voltage:
12 VDC 12
24 VDC 24

Load:
120 N 05
240 N 10
500 N 20
750 N 30
1 000 N 40

Stroke:
50 mm 050
100 mm 100
150 mm 150
200 mm 200
250 mm 250
300 mm 300

Option 1:
Potentiometer (10 kΩ) P
None 0
Thermal protector T
Potentiometer + Thermal protector Z

Protection class:
IP65 65

Attachments:
Hole ∅=6,4 mm 1

Cable length:
600 mm 06

ID8A series (fig. 14)

Fig. 14

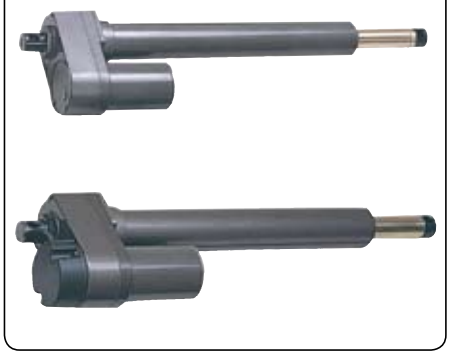

Features / Benefits
- Ambient temperature – 26 °C to + 65 °C
- ACME screw drive
- Extension tube (steel), powder coated
- Protection tube (steel), powder coated
- Powder coated aluminium alloy housing
- Powder metal gears
- Enhanced corrosion resistance
- Mechanical overload protection (clutch)
- Lubricated for service life
- Robust, designed for tough environment
- Static load capacity 4 500 N
- Self-locking
- Duty cycle 25 %
- Certified (CE 55011)

Options
- Thermo protection
- Potentiometer (10 KΩ/10 turns)

Performance diagram: (load versions; "10" and "20" - see ordering key on next page)

Speed vs Load (force)

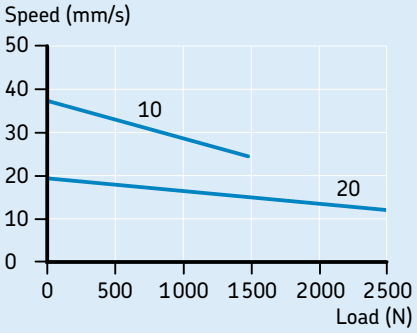

Current vs Load (force)

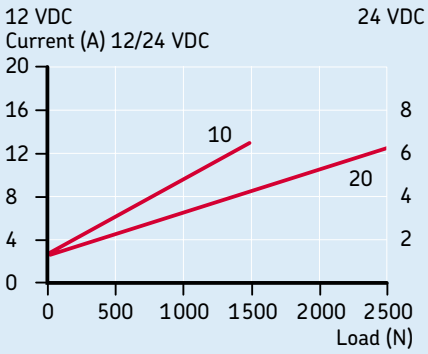

Type	Force push	Force pull	Max. speed no load	Max. speed full load	Stroke (S)	Retr. Length* (L)	Voltage	Protection class	Weight
	N		mm/s		mm	mm	V DC	IP	kg
ID8A 10	1 500	1 500	38	25	102 – 610	–*	12 – 24	65	6
ID8A 20	2 500	2 500	20	13	102 – 610	–*	12 – 24	65	6

With limit switch*							Without limit switch**					
Stroke (mm)	102	153	204	305	457	610	102	153	204	305	457	610
L1 (Retracted length in mm)*	338	389	440	592	744	897	262	313	364	465	668	821
L2 (Retracted length in mm)*	376	427	478	630	782	935	300	351	402	503	706	859

* Tolerance; S, L_1 and L_2: ± 5,0 mm (If S > 300 mm, S ± 7,5 mm)
** Tolerance; L_1 and L_2 = ± 3,8 mm, S = ± 2,5 mm

Potentiometer						
Stroke	102	153	204	305	457	610
Ohm/mm	59	59	29,5	29,5	9,84	9,84

ID8A series

Different rear clevis mounting: C0-C5

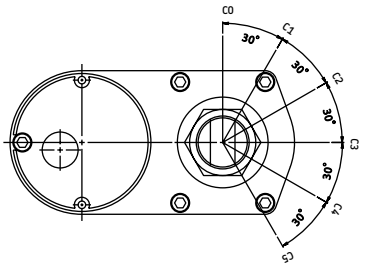

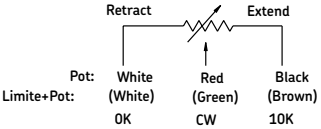

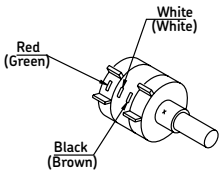

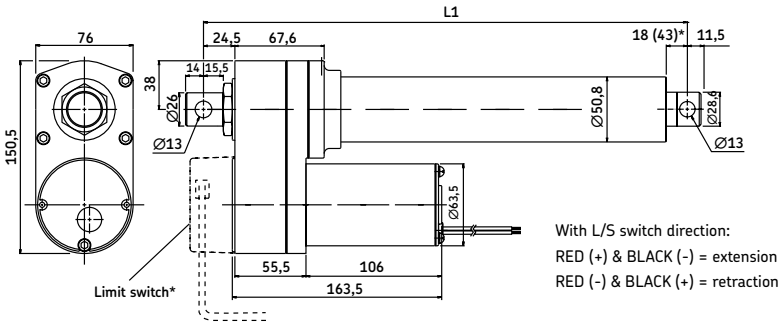

With L/S switch direction:
RED (+) & BLACK (-) = extension
RED (-) & BLACK (+) = retraction

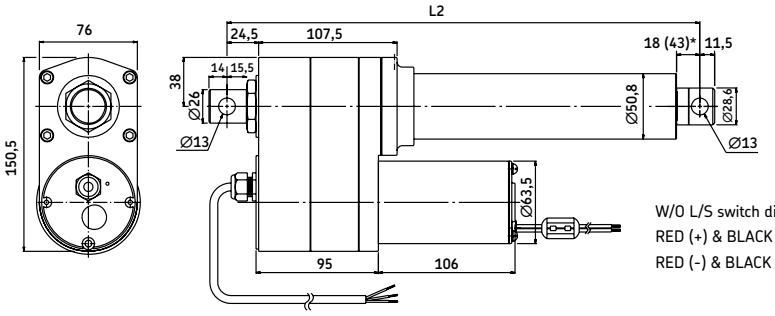

W/O L/S switch direction:
RED (+) & BLACK (-) = retraction
RED (-) & BLACK (+) = extension

Ordering key

I	D	8	A	-			-			-				-		-	6	5	-		-			13

Type

Voltage:
12 VDC 12
24 VDC 24

Load (N):
1 500 10
2 500 20

Stroke:
102 mm 100
153 mm 150
204 mm 200
305 mm 300
457 mm 450
610 mm 600

Option 1:
Limit switches (only for load version 20) L

Option 2:
Potentiometer P

Protection class:
IP65 65

Option 4:
Thermo protection T

Orientation rear attachment:
0° C0
30° C1
60° C2
90° C3
120° C4
150° C5

Cable length:
130 mm 13

ID8B series (fig. 15)

Fig. 15



Features / Benefits
- Ambient temperature –26 °C to +65 °C
- High efficiency ball screw
- High efficiency ball screw drive
- Extension tube (stainless steel)
- Protection tube (steel), powder coated
- Powder coated aluminium alloy housing
- Powder metal gears
- Enhanced corrosion resistance
- Overload protection (clutch)
- Lubrication for service life
- Robust, designed for tough environment
- Static load capacity 13 600 N
- No back driving
- Duty cycle 25 %
- Certified (CE 55011)

Option
- Thermo protection
- Potentiometer (10 KΩ/10 turns)

Performance diagram: (load versions; "05", "10" and "20" - see ordering key on next page)

Speed vs Load (force)

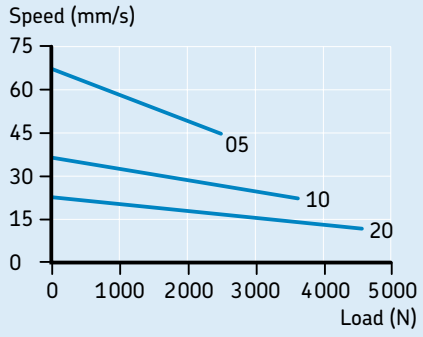

Current vs Load (force)

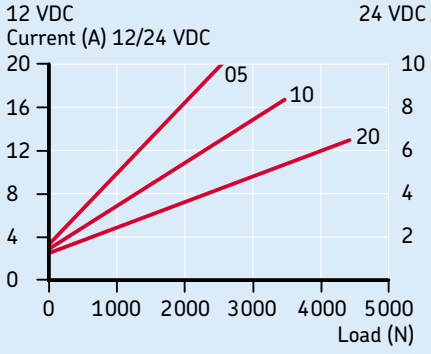

Type	Force push	Force pull	Max. speed no load	Max. speed full load	Stroke (S)	Retr. Length* (L)	Voltage	Protection class	Weight
	N		mm/s		mm	mm	V DC	IP	kg
ID8B 05	2 300	2 300	65	45	102 – 610	–*	12/24	65	6
ID8B 10	3 500	3 500	36	22	102 – 610	–*	12/24	65	6
ID8B 20	4 500	4 500	22	13	102 – 610	–*	12/24	65	6

With limit switch*							**Without limit switch****					
Stroke (mm)	102	153	204	305	457	610	102	153	204	305	457	610
L1 (Retracted length in mm)*	378	429	480	659	811	964	302	353	404	506	735	888
L2 (Retracted length in mm)*	416	467	518	697	849	1 002	340	391	442	544	773	926

* Tolerance; S, L_1 and L_2: ± 5,0 mm (If S > 300 mm, S ± 7,5 mm)
** Tolerance; L_1 and L_2 = ± 3,8 mm, S = ± 2,5 mm

Potentiometer						
Stroke	102	153	204	305	457	610
Ohm/mm	59	59	29,5	29,5	9,84	9,84

ID8B series

Different rear clevis mounting: C0-C5

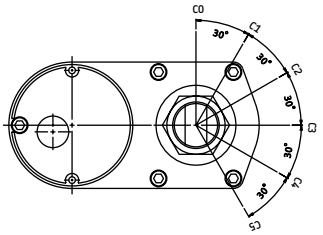

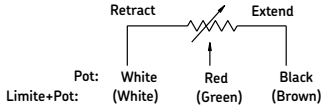

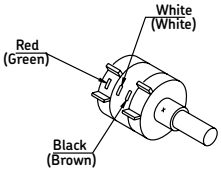

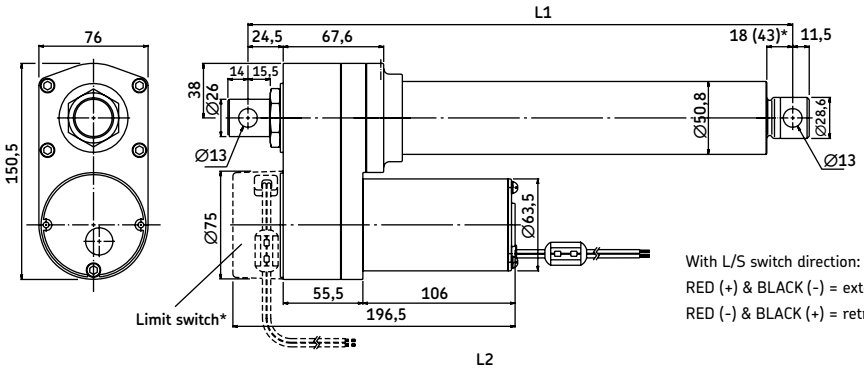

With L/S switch direction:
RED (+) & BLACK (-) = extension
RED (-) & BLACK (+) = retraction

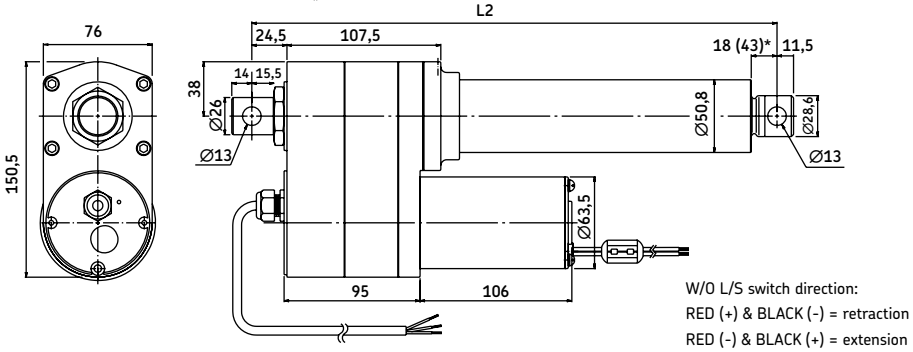

W/O L/S switch direction:
RED (+) & BLACK (-) = retraction
RED (-) & BLACK (+) = extension

Ordering key

I D 8 B - □□ - □□ - □□□ - □ - □ - 6 5 - □ - □□ 13

Type

Voltage:
12 VDC 12
24 VDC 24

Load (N):
2 300 05
3 500 10
4 500 20

Stroke:
102 mm 100
153 mm 150
204 mm 200
305 mm 300
457 mm 450
610 mm 600

Option 1:
Limit switches (only for load version 20) L

Option 2:
Potentiometer P

Protection class:
IP65 65

Option 4:
Thermo protection T

Orientation rear attachment:
0° C0
30° C1
60° C2
90° C3
120° C4
150° C5

Cable length:
130 mm 13

IA4A series (fig. 16)

Fig. 16



Features / Benefits
- Ambient temperature –26 °C to +65 °C
- Thermo protector
- ACME screw drive
- Extension tube (stainless steel)
- Protection tube (steel), powder coated
- Powder coated aluminium alloy housing
- Powder metal gears
- Enhanced corrosion resistance
- Mechanical overload protection (clutch)
- Lubricated for service life
- Robust, designed for tough environment
- Static load capacity 4 500 N
- Self-locking
- Duty cycle 25 %

Option
- Potentiometer (10 KΩ/10 turns)

Performance diagram: (load versions; "10" and "20" - see ordering key on next page)

Speed vs Load (force)

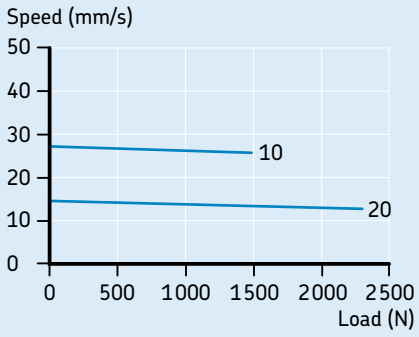

Current vs Load (force)

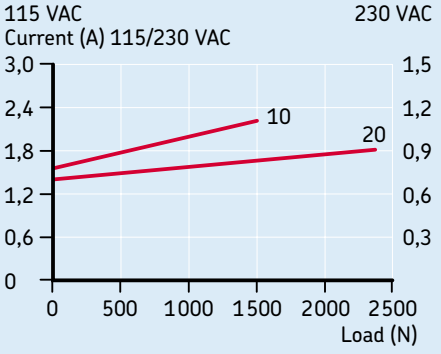

Type	Force push	Force pull	Max. speed no load	Max. speed full load	Stroke (S)	Retr. Length* (L)	Voltage	Protection class	Weight
	N		mm/s		mm	mm	V DC	IP	kg
IA4A 10	1 500	1 500	29	25	102 – 610	–*	115/230	65	8,5
IA4A 20	2 300	2 300	16	14	102 – 610	–*	115/230	65	8,5

With limit switch*							Without limit switch**					
Stroke (mm)	102	153	204	305	457	610	102	153	204	305	457	610
L1 (Retracted length in mm)*	440	440	440	592	744	897	380	415	415	465	668	821
L2 (Retracted length in mm)*	478	478	478	630	782	935	418	453	453	503	706	859

* Tolerance; S, L_1 and L_2: ± 5,0 mm (If S > 300 mm, S ± 7,5 mm)
** Tolerance; L_1 and L_2 = ± 3,8 mm, S = ± 2,5 mm

Potentiometer						
Stroke	102	153	204	305	457	610
Ohm/mm	59	59	29,5	29,5	9,84	9,84

IA4A series

Different rear clevis mounting: C0-C5

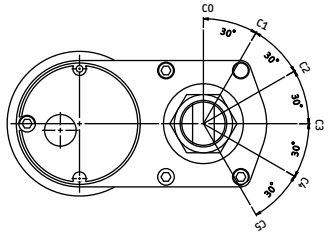

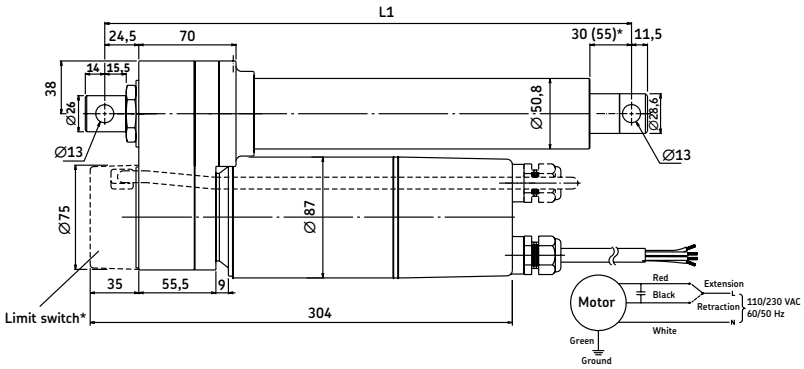

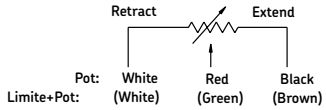

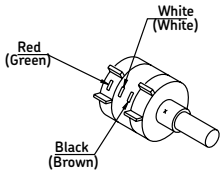

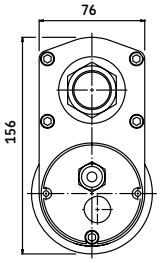

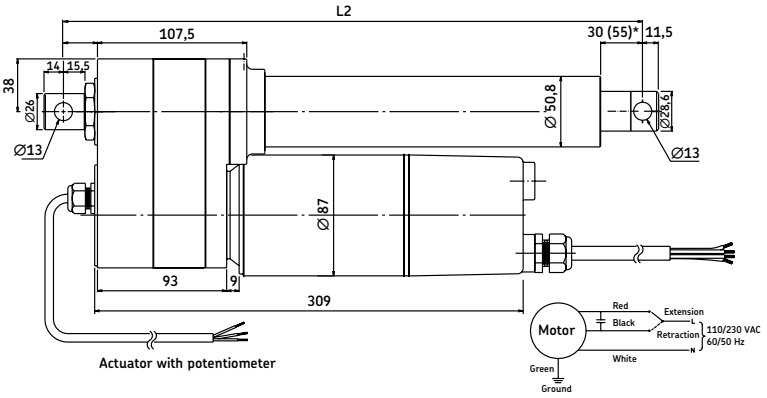

Ordering key

I	A	4	A	-				-			-				-		-		-			06

Type

Voltage:

115 VAC	110
230 VAC	230

Load:

1 500 N	10
2 300 N	20

Stroke:

102 mm	100
153 mm	150
204 mm	200
305 mm	300
457 mm	450
610 mm	600

Option 1:

Limit switches (only for load version 20)	L

Option 2:

Potentiometer	P

Option 3:

Thermo protection	T

Orientation rear attachment:

0°	C0
30°	C1
60°	C2
90°	C3
120°	C4
150°	C5

Cable length:

600 mm	06

IA4B series (fig. 17)

Fig. 17



Features / Benefits
- Ambient temperature –26 °C to +65 °C
- High efficiency ball screw
- Thermal protector
- Extension tube (stainless steel)
- Protection tube (steel), powder coated
- Powder coated aluminium alloy housing
- Powder metal gears
- Enhanced corrosion resistance
- Overload protection (clutch)
- Lubricated for service life
- Robust, designed for tough environment
- Static load capacity 13 600 N
- No back driving
- Duty cycle 25 %

Option
- Potentiometer (10 KΩ/10 turns)

Performance diagram: (load versions - see ordering key on next page)

Speed vs Load (force)

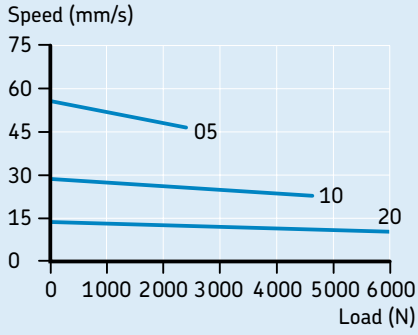

Current vs Load (force)

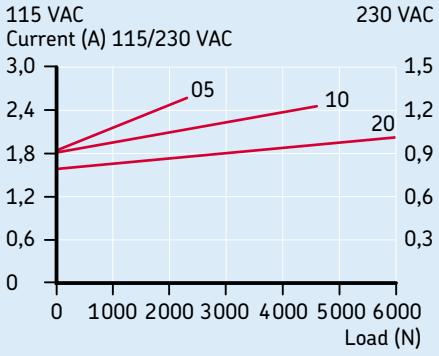

Type	Force push	Force pull	Max. speed no load	Max. speed full load	Stroke (S)	Retr. Length* (L)	Voltage	Protection class	Weight
	N		mm/s		mm	mm	V DC	IP	kg
IA4B 05	2 300	2 300	57	46	102 – 610	–*	115/230	65	6,0
IA4B 10	4 500	4 500	29	25	102 – 610	–*	115/230	65	6,0
IA4B 20	6 000	6 000	22	13	102 – 610	–*	115/230	65	6,0

	With limit switch*						Without limit switch**					
Stroke (mm)	102	153	204	305	457	610	102	153	204	305	457	610
L1 (Re tracted length in mm)*	429	429	480	659	811	964	380	404	404	506	735	888
L2 (Retracted length in mm)*	467	467	518	697	849	1 002	418	442	442	544	773	926

* Tolerance; S, L_1 and L_2: ± 5,0 mm (If S > 300 mm, S ± 7,5 mm)
** Tolerance; L_1 and L_2 = ± 3,8 mm, S = ± 2,5 mm

Potentiometer

Stroke	102	153	204	305	457	610
Ohm/mm	59	59	29,5	29,5	9,84	9,84

IA4B series

Different rear clevis mounting: C0-C5

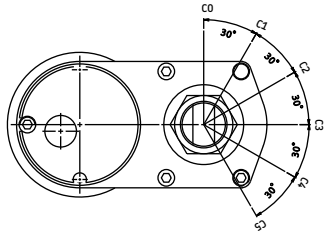

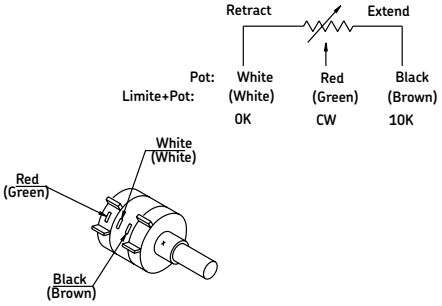

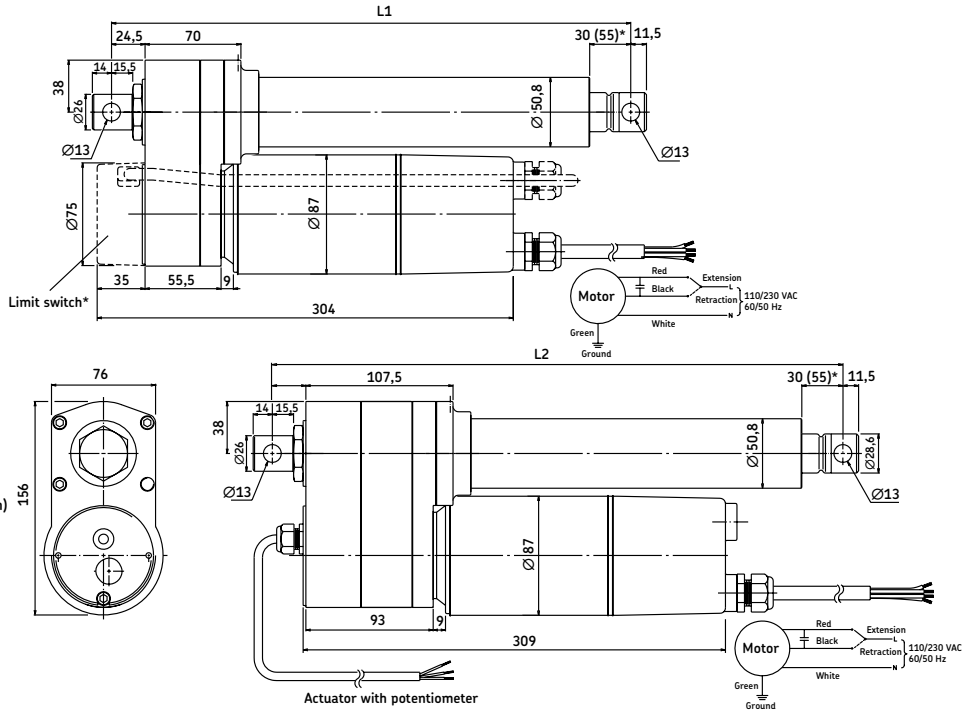

4

Ordering key

I	A	4	B	-				-			-				-		-			-			06

Type

Voltage:

115 VAC	110
230 VAC	230

Load:

2 300 N	05
4 500 N	10
6 000 N	20

Stroke:

102 mm	100
153 mm	150
204 mm	200
305 mm	300
457 mm	450
610 mm	600

Option 1:

Limit switches (only for load version 20)	L

Option 2:

Potentiometer	P

Orientation rear attachment:

0°	C0
30°	C1
60°	C2
90°	C3
120°	C4
150°	C5

Cable length:

600 mm	06

Control units

A large number of control units (**fig. 18**) are available to operate the linear drives and telescopic pillars. They allow the connection of up to 5 actuators or several external options. There is also a version to operate battery powered DC actuators.

Benefits:
- Application focused system control
- Operation of up to 5 actuators
- Connections for foot, hand or desk switches
- Basic functions or encoder processing versions

Fig. 18



Control units	Type	Control	Max. motor connections	Imput	Output
			n°	V	V/A
BCU	4/5/8/9	Basic functions	3	230/120 AC	24/7
SCU	SCU1	Synchronous	6	22 - 40 DC	24/23 or 30
	SCU5	Synchronous	6	120 AC	24/18
	SCU9	Synchronous	6	230 AC	24/18

BCU

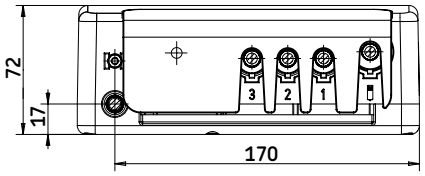

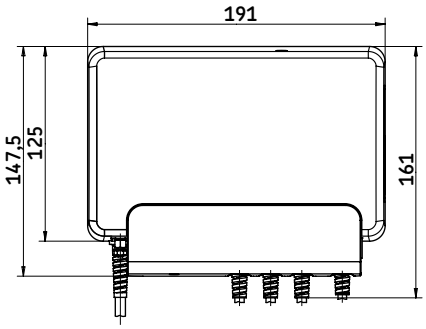

Type	Control	Max. motor connections	Input	Output
		n°	V	V/A
BCU 53	Basic functions	3	120	24/7
BCU 83	Basic functions	3	230	24/7

4

Ordering key

B C U ☐ 3 - ☐ ☐ 3 ☐ 0 0 - 0 0 0 0

Type

Voltage:
120 VAC 50/60 Hz (Class I) 5
230 VAC 50 Hz (Class II) 8

Number of channels:
3 channels 3

Mains power supply cable:
Class II, straight, 3,5 m, 2-pole plug, EU (for voltage type 8) 2J
Class II, straight, 3,5 m, 2-pole plug, UK (for voltage type 8) 2H
Class I, straight, 3,5 m, 3-pole plug, Hospital grade (for voltage type 5) 2N
Class I, straight, 3,5 m, 3-pole plug, UL (for voltage type 5) 2L

Colour/Design:
Grey 3

Option 1:
DIN 8 motor plug and HD15 operating device plug 1

Ordering key

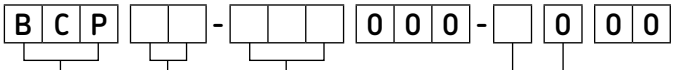

Type

BCU parameterization

Functionality:

All channels individual	11
Channel 2+1	21
All channels simultaneously	30
Trendelenburg	T1

Motors:

A	CALA36A, ECO30, ECO50	3,7 A	Actuator 1
C	CARE33A, TLT10, TXG10 (EXG)	4,7 A	Actuator 2
E	TFG, ECO70, ECO90, CAT33, CAT32B	5,7 A	Actuator 3
M	MAX, TLG, THG	6,7 A	
R	R20, R21, R22, MD22, MD23	8,5 A	

Soft start/stop:

Hard, start 0 ms, stop 0 ms	0
Medium, start 400 ms, stop 200 ms	3
Soft, start 1 000 ms, stop 500 ms	6

Options:

None	0

Notes

SCU (fig. 19)

Fig. 19

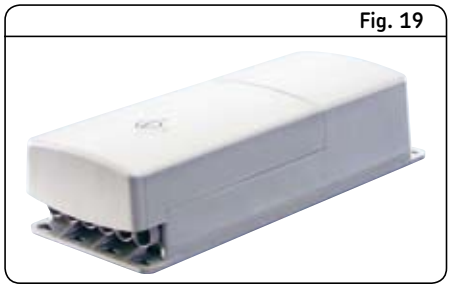

Connection diagram for optional external limit switches

Single fault safe wiring requires diodes in series to the switches. NC contacts have to be used to stop a movement; NO contacts are used to start movements. Switch connection data: 50 VDC min., 100 mA min. (eff. switching current approx. 10 mA)

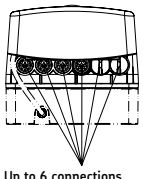

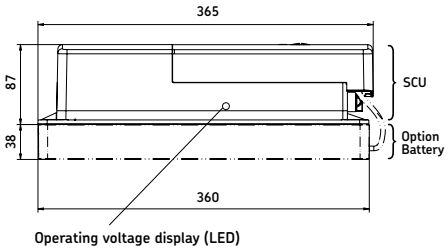

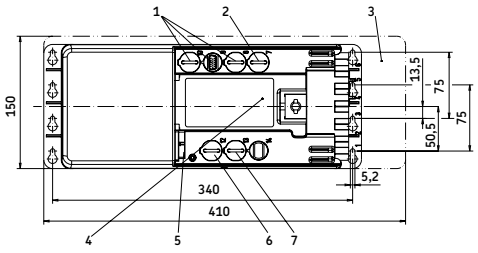

View without protection cover

Legend:
1) Two connections for HD15 operating devices
2) HD15 limit switch connection
3) Additional space for mounting
4) Data plate software
5) Main connection
6) Communication interface (optional)
7) D-Sub9 battery connection (optional)

Pinning of HD15 limit switch

Function	Pin	Wire colour (ZKA-160627-2500)
Switch 1	2	brown/green
Switch 2	4	red/blue
Switch 3	6	violet
Switch 4	8	red
Common (24 VDC pulsed)	1, 3, 5, 7	white/yellow, white/green, grey/pink, black
Optional external power supply for binary outputs	9	blue
Binary output 1 (22-40 VDC/1 A)	10	pink
Binary output 2 (22-40 VDC/1 A)	11	grey
GND for binary outputs	12	yellow
20-40 VDC, max. 50 mA	13	green
5 VDC pulsed	14	brown
GND	15	white

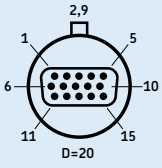

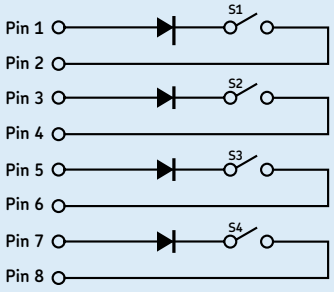

Type	Control	Max. motor connections	Input	Output
		n°	V	V/A
SCU1	Synchronous	6	22/40 DC	24/23 or 30
SCU5	Synchronous	6	120 AC	24/18
SCU9	Synchronous	6	230 AC	24/18

Accessories	Plug	Order number
Mains cable, 3 pole	Schuko	ZKA-160637-3500
Mains cable, 3 pole	SEV	ZKA-160638-3500
Mains cable, 3 pole	UL	ZKA-160639-3500
Mains cable, 3 pole	UK	ZKA-160609-3050
Mains cable, 3 pole	UL hospital grade	ZKA-160640-3500

Ordering key

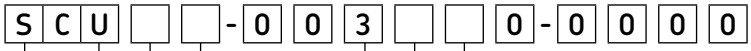

Type

SCU control unit

Voltage:

24 VDC (only for 6 channel version)	1
120 VAC, 60 Hz, class I	5
230 VAC, 50 Hz, class I	9

Number of channels:

3 channels	3
6 channels	6

Colour/Design:

Grey	3

Battery:

None (only for SCU16)	1
Prepared for adoption of battery	2
Battery (2,7 Ah) connected on the underside of the unit	3

Transformer:

None (only for SCU16)	0
Standard (AC version)	3

Ordering key

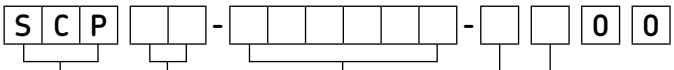

Type

SCU parameterization

Functionality:

All channels individually	11
Channel 2+1(+1+1+1)	21
Six (6) channel version 2+2+1+1	22
Three (3) channel version, all channels synchronously	30
Six (6) channel version 3+1+1+1	31
Six (6) channel version 4+1+1	41
Six (6) channel version, all channels synchronously	60
Trendelenburg T+1 (+1+1)	T1

Actuators:

			Actuator 1
C	TLT 10	4,7 A	Actuator 2
E	TFG10	5,7 A	Actuator 3
M	MAX, TLG, THG	6,7 A	Actuator 4*
R	R20, R21, R22	8,5 A	Actuator 5*
U	R23, R24, R25	11,7 A	Actuator 6*

*for SCU×3: insert zero

Softstart:

Hard, start 0 pulses, stop 0 pulses	0
Medium, start 12 pulses, stop 6 pulses	3
Soft, start 24 pulses, stop 12 pulses	6

Options:

None	0

The SCU solution offers many more possibilities than those given in the type keys. Please feel free to ask for more functions like “virtual limit switches”, “external limit switches” and so on.

Hand switches

The hand switches (**fig. 20**) serve for operating one or several actuators. With the pushbuttons field on the front panel, the movements of the actuators can be controlled easily and precisely. The hand switches are available with different plug options. There is also an infrared version for more flexibility in remote operating.

Benefits:
- Easy and precise
- Flexible and remote operation
- Ergonomic design
- Different plug options

Fig. 20



Hand switches	Type	Operating power	Max. operating channels	Prot. class	Colour
		V DC/mA	n°	IP	
EHA	EHA 3	12/50	5	67	grey

EHA 3

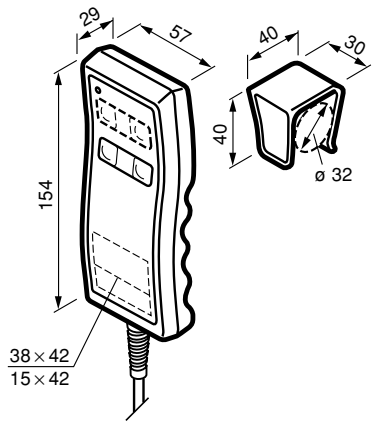

Type	Operating power	Max. operating motors	Prot. class	Colour
	V DC/mA	n°	IP	
EHA 3	12/50	5	67	grey

Item	Order number
Hook with sticker	145361-0001

Ordering key

E H A 3 [ ] - [ ] 3 M [ ] [ ] N - 0 0 0

Type

Number of channels:

1 channel	1
2 channels	2
3 channels	3
5 channels	5
1 channel with 3 memory positions (only for SCU)	A
2 channels with 3 memory positions (only for SCU)	B
3 channels with 3 memory positions (only for SCU)	C

Hook:

Mounted with hook	1
Hook supplied separately	2

Colour:

Grey	3

Plug/Cable:

Coiled cable 1,3 m/2,3 m, High Density D-Sub 15p	M

Symbols:

None		00
1 channel: 2nd row from top	Arrow up/down	10
	Head	11
	Foot	12
	Level	13
	Anti-Trendelenburg	14
2 channels: 1st row from top	Arrow up/down	20
	Head/foot	21
	Head/level	22
	Level/head	23
	Level/Anti-Trendelenburg	29
3 channels: 1st-3rd row from top	Arrow up/down	30
	Head/foot/level	31
	Level/head/foot	32
	Level/Anti-Trendelenburg/Head	39
4 channels: 1st-4th row from top	Arrow up/down	40
	Level/Anti-Trendelenburg/Head/Foot	47
5 channels: 1st-5th row from top	Arrow up/down	50

Customer logo:

No	N

Customer-specific adaptions:

None	000

Foot switches

Fig. 21



Electrical foot switches (**fig. 21**) serve to operate DC actuators. The large-size buttons enable easy and precise control of the actuators. Depending on the plug, the foot switches can be used on different control units.

Benefits
- Easy and precise
- Flexible and remote operation
- Ergonomic design
- Different plug options

Foot switches	Type	Operating power	Max. operating motors	Prot. class	Colour
		V DC/mA	n°	IP	
ST	ST	12/50	3	X5	blue/anthracite

ST

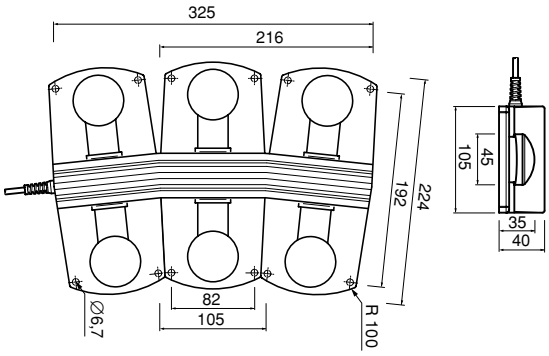

Type	Operating power	Max. operating motors	Prot. class	Colour
	V DC/mA	n°	IP	
ST	12/50	3	X5	blue/anthracite

Ordering key

S T J 0 _ - _ 1 _ - _ 00

Type

Product group:
Standard, single-fault-safe, HD15 plug — J

Voltage:
Not used — 0

Number of channels:
One (1) channel — 1
Two (2) channels — 2
Three (3) channels — 3

Cable/Connecting plug:
Coiled cable, 2,5 m with D-sub plug — LU
Coiled cable, 2,5 m with FCC plug — LV
Coiled cable, 2,5 m with HD15 plug — LW
Straight cable, 2,5 m with D-sub plug — 0U
Straight cable, 2,5 m with FCC plug — 0V
Straight cable, 2,5 m with HD15 plug — 0W

Colour:
Charcoal — 1

Options:
None — 000

Symbols:
Arrow up/down (on each pair of buttons), 1-3 channels — X1
Arrow up/down, M/1, 2/3 (3 memory buttons), 3 channels — 37

Accessories

Item	Symbol	Order number	Item	Symbol	Order number
Rubber feet (100 pcs.)		ZBE-135310	Symbol sticker	level down	135309-0008
Threaded expansion inserts		ZBE-521122	Symbol sticker	head up	135309-0009
Symbol sticker	arrow up	135309-0001	Symbol sticker	head down	135309-0010
Symbol sticker	arrow down	135309-0002	Symbol sticker	foot up	135309-0011
Symbol sticker	level up	135309-0007	Symbol sticker	foot down	135309-0012

Desk switches

The desk switches (**fig. 22**) serve for adjusting actuators in desks, chairs, couches and other adjustable furniture. They operate up to 3 actuator functions, also with memory positions, and can easily be fitted to furniture without compromising the design.

Benefits:
- Easy and precise
- Stylish design
- Different functions

Fig. 22



Desk switches	Type	Operating power	Max. operating motors	Prot. class	Colour
		V DC/mA	n°	IP	
ST	ST	12/50	3	X0	black

ST

STA straight

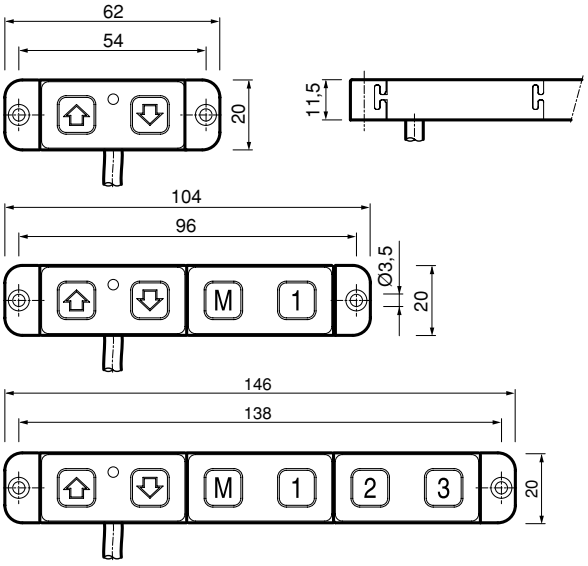

STA 90°

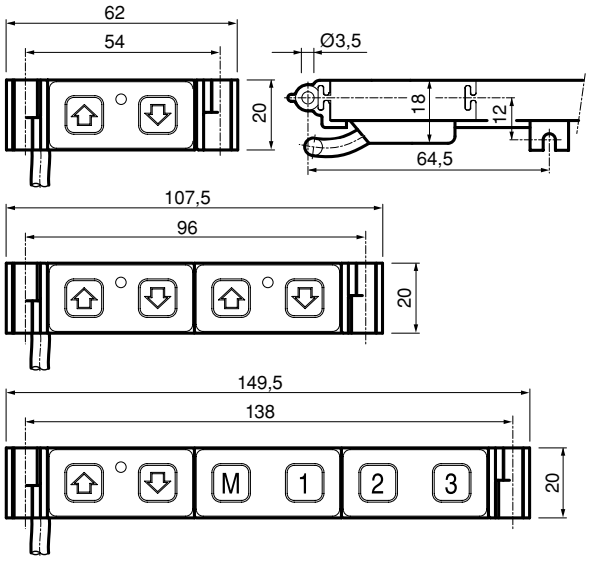

Type	Operating power	Max. operating motors	Prot. class	Colour
	V DC/mA	n°	IP	
ST	12/50	3	X0	black

Ordering key

S T E 0 - 6 - 00

Type

Product group:
Standard, single-fault-safe, HD15 plug — E

Voltage:
Not used — 0

Number of channels:
One (1) channel — 1
Two (2) channels — 2
Three (3) channels — 3

Cable/Connecting plug:
Straight cable, 2,5 m with D-sub plug — 0U
Straight cable, 1,5 m with FCC plug — WV
Straight cable, 2,5 m with HD15 plug — 0W

Colour:
Black — 6

Options:
No option — 000
Mounted on or underneath desktop, at a 90° angle — MAU

Symbols:
Up/down arrow on each pair of keys (1-3 channels) — X1
Up/down arrow, 3 memory functions M/1, M/2, M/3 (3 channels) — 37

Spare parts

CAR 22 – Type codes for accessories and spare parts

Item code	Type code
Limit switch for stroke = 700 mm	CAXB 40×700
12 V DC-motor (flat motor)	D12B
24 V DC-motor (flat motor)	D24B
Limit switch for stroke = 50 mm	CAXB 22×50
Limit switch for stroke = 100 mm	CAXB 22×100
Limit switch for stroke = 150 mm	CAXB 22×150
Limit switch for stroke = 200 mm	CAXB 22×200
Limit switch for stroke = 300 mm	CAXB 22×300
Proximity switch for CAXB	CAXB Proximity Switch
Front mounting attachments type rod-end	575–22
Front mounting attachments type clevis	576–22
Rear mounting attachments type single ear bracket	580–22
Rear mounting attachments type ball-joint bracket	581–22

CAR 32 – Type codes for accessories and spare parts

Item code	Type code
12 V DC-motor (flat motor)	D12C
24 V DC-motor (flat motor)	D24C
24 V DC-motor (flat motor with brake)	D24CB
24 V DC-motor (flat motor with extended shaft)	D24CS
24 V DC-motor (flat motor with low speed)	D24CW
120 V AC-motor (cylindrical motor)	E110C
120 V AC-motor (cylindrical motor with brake)	E110CB
230 V AC-motor (cylindrical motor)	E220C
230 V AC-motor (cylindrical motor with brake)	E220CB
Capacitor value 25 µF (120 V AC)	Capacitor 25 µF
Capacitor value 6 µF (230 V AC)	Capacitor 6 µF
Limit switch for stroke = 50 mm	CAXB 32×50
Limit switch for stroke = 100 mm	CAXB 32×100
Limit switch for stroke = 200 mm	CAXB 32×200
Limit switch for stroke = 300 mm	CAXB 32×300
Limit switch for stroke = 500 mm	CAXB 32×500
Limit switch for stroke = 700 mm	CAXB 32×700
Proximity switch for CAXB	CAXB Proximity Switch
Front mounting attachments type rod-end	575–32
Front mounting attachments type clevis	576–32
Rear mounting attachments type single ear bracket	580–32
Rear mounting attachments type Universal joint	582–32

CAR 40 – Type codes for accessories and spare parts

Item code	Type code
Limit switch for stroke = 100 mm	CAXB 40×100
Limit switch for stroke = 300 mm	CAXB 40×300
Limit switch for stroke = 500 mm	CAXB 40×500
Limit switch for stroke = 700 mm	CAXB 40×700
Proximity switch for CAXB	CAXB Proximity Switch
Front mounting attachments type rod-end	575–40
Front mounting attachments type clevis	576–40
Rear mounting attachments type single ear bracket	580–40
Rear mounting attachments type ball-joint bracket	581–40
24 V DC-motor (flat motor)	D24D
24 V DC-motor (flat motor with extended shaft)	D24DS
24 V DC-motor (flat motor with brake)	D24DB
120 V AC-motor (cylindrical motor)	E110D
120 V AC-motor (cylindrical motor with brake)	E110DB
230 V AC-motor (cylindrical motor)	E220D
230 V AC-motor (cylindrical motor with brake)	E220DB
Capacitor value 12 µF (230 V AC-motor)	Capacitor 12 µF

CAT 33 – Type codes for accessories and spare parts

Item code	Type code
12 V DC-motor (cylindrical motor)	C12C
12 V DC-motor (flat motor)	D12C
24 V DC-motor (cylindrical motor)	C24C
24 V DC-motor (cylindrical with low speed)	C24CW
24 V DC-motor (flat motor)	D24C
24 V DC-motor (flat motor with brake)	D24CB
24 V DC-motor (flat motor with extended shaft)	D24CS
24 V DC-motor (flat motor with low speed)	D24CW
120 V AC-motor (cylindrical motor)	E110C
120 V AC-motor (cylindrical motor with brake)	E110CB
230 V AC-motor (cylindrical motor)	E220C
230 V AC-motor (cylindrical motor with brake)	E220CB
400 V AC-motor (cylindrical motor)	E380C
Capacitor value 25 µF (120 V AC)	Capacitor 25 µF
Capacitor value 6 µF (230 V AC)	Capacitor 6 µF
Limit switch for any stroke	CAXC33
Front mounting attachments type rod-end	575–32
Front mounting attachments type clevis	576–32
Rear mounting attachments type single ear bracket	580–32
Rear mounting attachments type Universal joint	582–32

CAT 33H – Type codes for accessories and spare parts

Item code	Type code
Rear mounting attachments type Universal joint	582–32
12 V DC-motor (cylindrical motor)	C12C
12 V DC-motor (flat motor)	D12C
24 V DC-motor (cylindrical motor)	C24C
24 V DC-motor (cylindrical with low speed)	C24CW
24 V DC-motor (flat motor)	D24C
24 V DC-motor (flat motor with brake)	D24CB
24 V DC-motor (flat motor with extended shaft)	D24CS
24 V DC-motor (flat motor with low speed)	D24CW
110 V AC-motor (cylindrical motor)	E110C
230 V AC-motor (cylindrical motor)	E220C
230 V AC-motor (cylindrical motor with brake)	E220CB
400 V AC-motor (cylindrical motor)	E380C
Capacitor value 6 µF (230 V AC)	Capacitor 6 µF
Limit switch for any stroke	CAXC33
Front mounting attachments type rod-end	575–32
Front mounting attachments type clevis	576–32
Rear mounting attachments type single ear bracket	580–32

CAT 32B – Type codes for accessories and spare parts

Item code	Type code
12 V DC-motor (cylindrical motor)	C12C
12 V DC-motor (flat motor)	D12C
24 V DC-motor (cylindrical motor)	C24C
24 V DC-motor (cylindrical with low speed)	C24CW
24 V DC-motor (flat motor)	D24C
24 V DC-motor (flat motor with brake)	D24CB
24 V DC-motor (flat motor with extended shaft	D24CS
24 V DC-motor (flat motor with low speed)	D24CW
120 V AC-motor (cylindrical motor)	E110C
120 V AC-motor (cylindrical motor with brake)	E110CB
230 V AC-motor (cylindrical motor)	E220C
230 V AC-motor (cylindrical motor with brake)	E220CB
400 V AC-motor (cylindrical motor)	E380C
Capacitor value 25 µF (120 V AC)	Capacitor 25 µF
Capacitor value 6 µF (230 V AC)	Capacitor 6 µF
Limit switch for stroke = 50 mm	CAXB 32×50
Limit switch for stroke = 100 mm	CAXB 32×100
Limit switch for stroke = 200 mm	CAXB 32×200
Limit switch for stroke = 300mm	CAXB 32×300
Limit switch for stroke = 400 mm	CAXB 32×400
Limit switch for stroke = 500mm	CAXB 32×500
Limit switch for stroke = 700mm	CAXB 32×700
Proximity switch for CAXB	CAXB Proximity Switch
Front mounting attachments type rod-end	575–32
Front mounting attachments type clevis	576–32
Rear mounting attachments type single ear bracket	580–32
Rear mounting attachments type Universal joint	582–32

Attachments

580-22

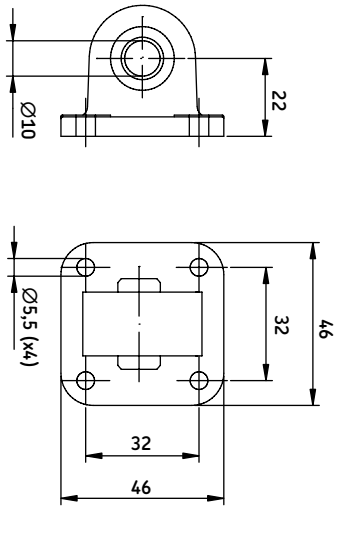

580-32

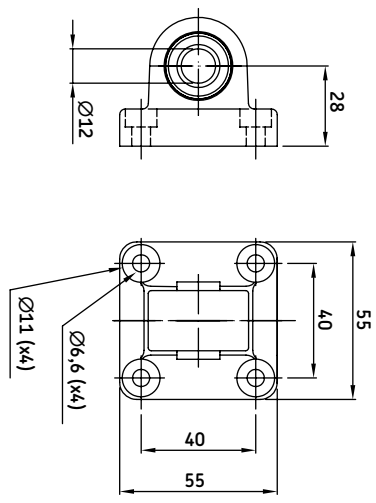

580-40

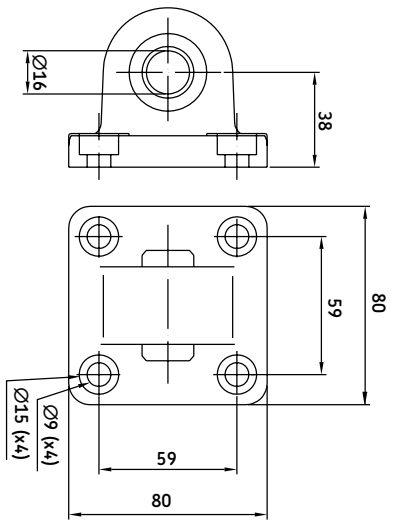

581-22

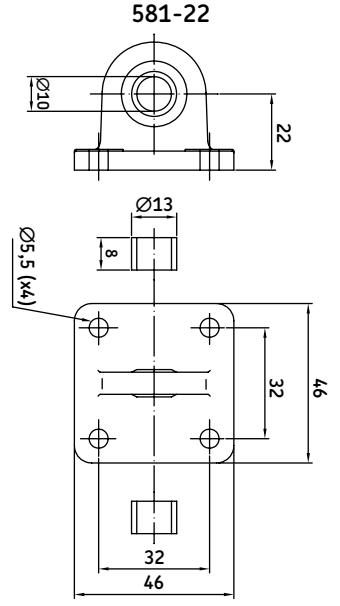

581-40

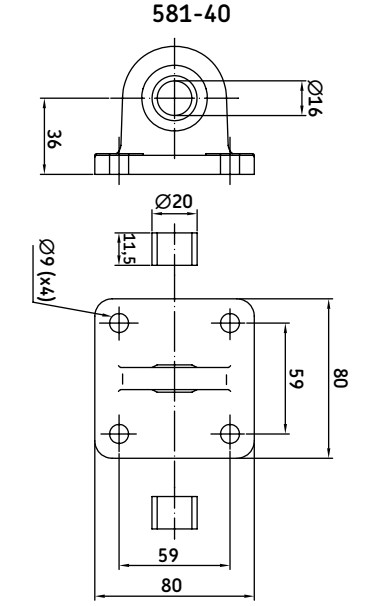

582-32

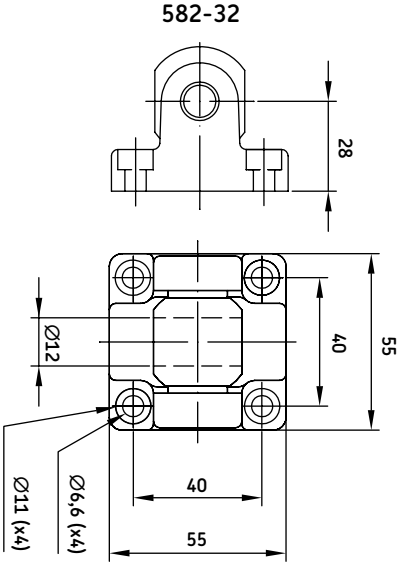

575-22

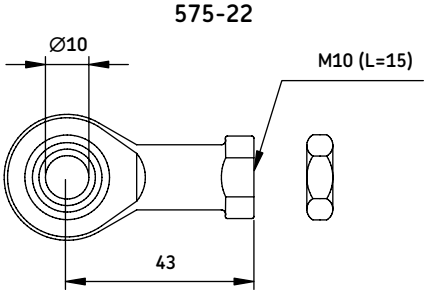

575-32

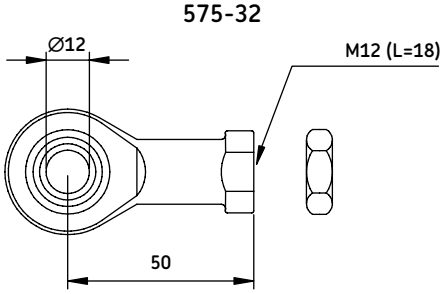

575-40

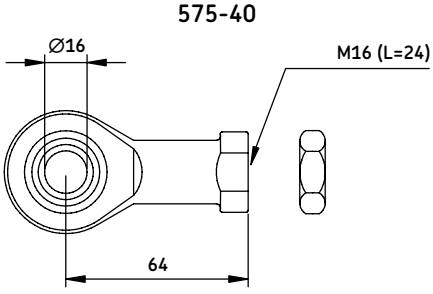

576-22

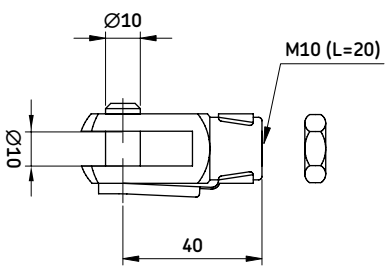

576-32

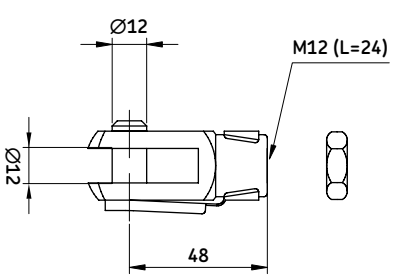

576-40

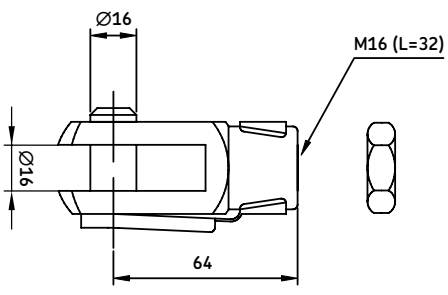

Limit switches

CAXC 33 limit switch

Limit switches (**fig. 23**), combined with SKF control units, make it possible to set the stroke to any desired length.
Use of limit switches results in reduced effective stroke length by 20 mm (inner position is affected)

- CAXC 33 - designed for actuator series with 33 mm aluminium protection tube
  CATR/L 33
  CALA 36
  CARE 33A
  CARE 33M
- Proximity switches - connect to control unit according to the wiring diagram

Fig. 23

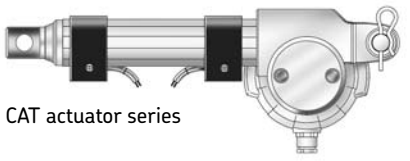

CAT actuator series



CALA actuator series

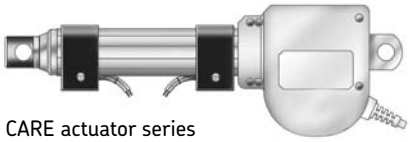

CARE actuator series

Technical data	
Permissible power	3 W
Max. DC voltage	200 V
Max. DC current	200 mA

Ordering code:
CAXC 33

NB! One CAXC is needed for each limit position.

NB! Make sure you connect limit switches to a DC-supply.

Wiring diagram:

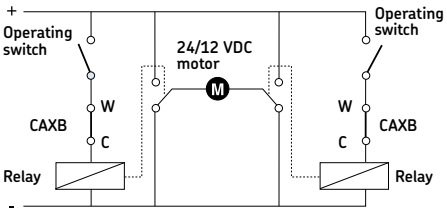

Switch function:

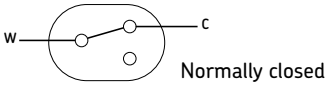

Normally closed

Dimensions:

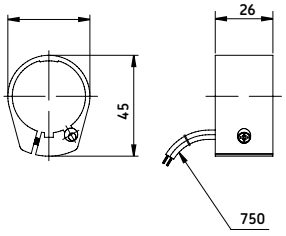

CAXB 22/32/40 limit switches

CAXB 22

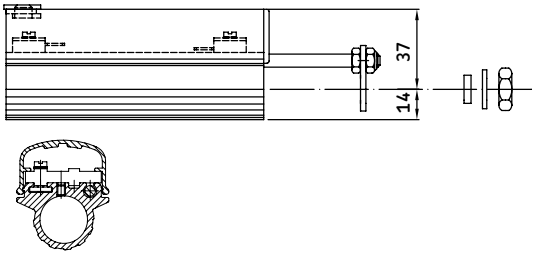

CAXB 32B

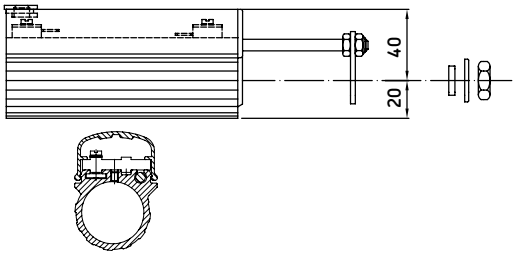

CAXB 32

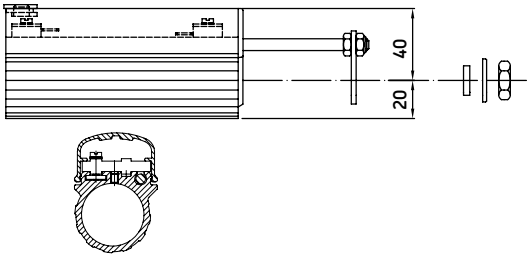

CAXB 40

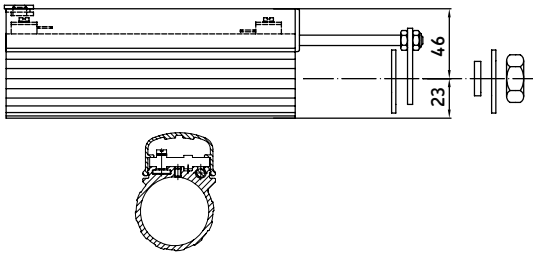

Motors

D12C/D24C

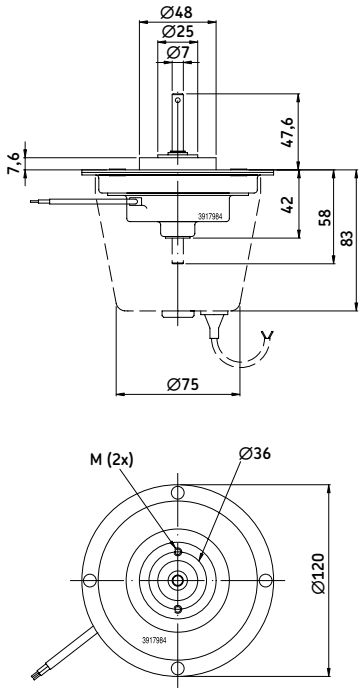

D24D

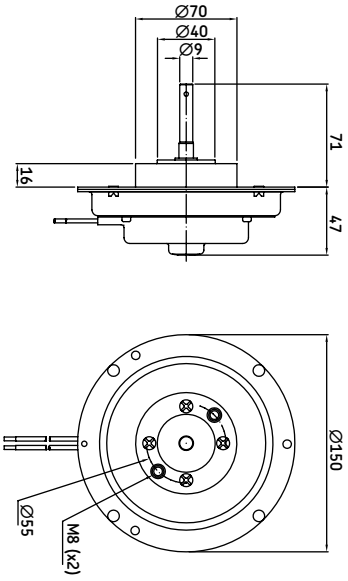

E220C

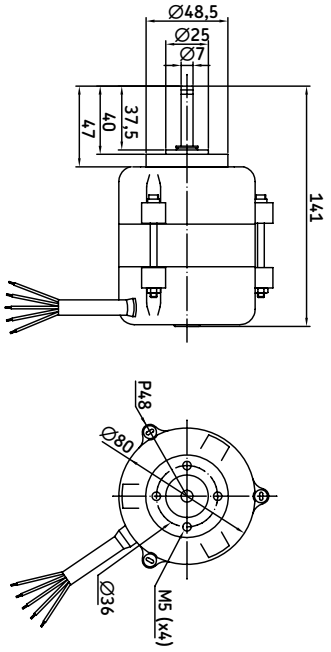

E220D

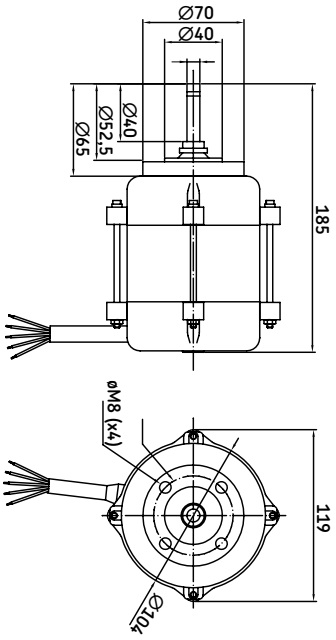

D24D/D24DB/D24DS

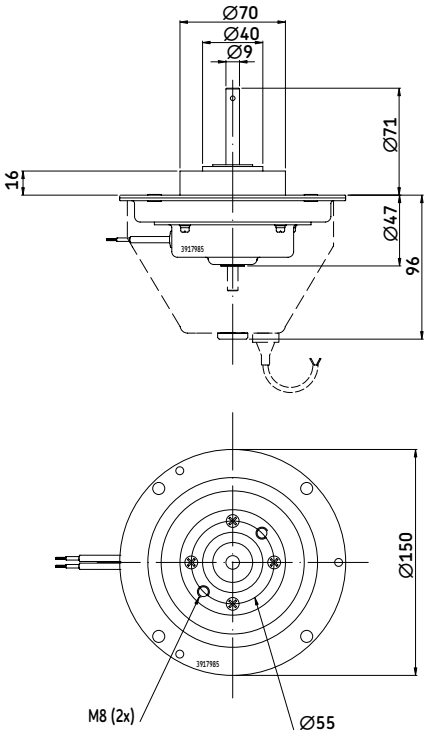

D12B/D24B

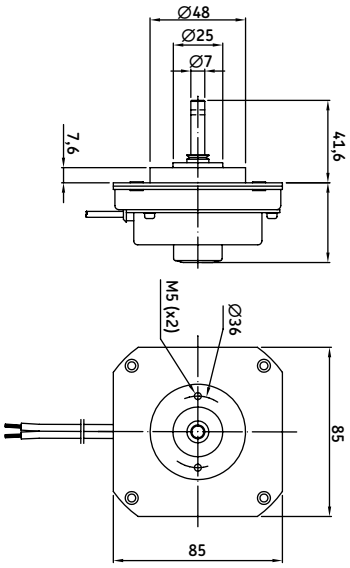

Glossary and definitions

AC motors
An electric motor powered by alternating current electricity (120-400 V AC), which requires an electrician for its connection. Startup properties can be improved with various accessories and different methods of connection. There are many standard accessories available for control and regulation of an AC motor. An AC motor is best suited to non-mobile products, i.e., fixed installations, often in industrial environments. An actuator with an AC motor is less sensitive to load variations and maintains virtually the same speed regardless of load. The normal working temperature for this type of motor is 70 °C. An AC motor has few moving parts that wear and is consequently rugged and has a long life span.

Alignment
It is important that the product is mounted properly from the beginning. If the actuator is improperly installed, normal operation may cause poor performance. Remember, therefore, to carefully follow the accompanying mounting instructions. Naturally, you can turn to your supplier or distributor whenever you have questions about our products.

Anti-pinching (electric)
A safety device that is available on certain SKF actuators. It shuts off the motor when an external force is applied in the opposite direction to the direction of travel.

Anti-pinching (mechanical)
This safety device allows the actuator to push but not pull or pull but not push. This feature is designed to prevent injury to persons due to being trapped by the force of the actuator.

Back-up nut
A nut, usually metal, of greater antishear strength than the drive nut and which only makes contact with the threads of the spindle when the threads of the drive nut fail.

DC motors
An electric motor powered by direct current electricity (12-48 V DC) that can be run on batteries. These motors are suitable for use in situations where you want to be able to move the product easily and do not want a cable in the way. The speed of a DC motor is directly proportional to the load, i.e., the motor moves slowly under maximum load and fastest when run with no load at all. In many applications the actuator works both pushing and pulling, which means that the load works to "assist" in one direction and "resist" in the other. Consequently, considerable speed variations can arise.

Dynamic load
Maximal dynamic load refers to the maximum total weight or mass the actuator can move. Often, the decisive factor for maximal load is the size of the motor and the gearing employed. When an actuator is subject to loads exceeding the maximum stated value, the device simply stops. Certain actuator types have an integral mechanical safety device similar to a slip-clutch, designed to protect the motor and gears from damage. Electrical limit switches are another alternative. These protect the actuator from damage caused by excessive electrical current. All such safety devices are part of an operating system and it is important to be aware of them when using SKF actuators with other operating equipments.

Duty factors
A technical term expressing how long a motor can handle non-stop operation before it becomes overheated or otherwise damaged. It should be noted that "Duty Factor", whether expressed as a percentage or time, varies depending on the working load for the motor. The duty cycle tells how often an actuator will be in operation within an application and the amount of time between operations. Because of the power lost due to inefficiency dissipated as heat, the actuator component with the lowest allowable temperature – usually the motor – sets the duty cycle limit for the complete actuator. Although, there is some heat loss from friction in the gearbox and by ball screw and acme screw drive systems. An example of a duty cycle calculation: assume an actuator runs for 10 seconds cumulatively, up and down, and then does not run for another 40 seconds. The duty cycle is 10/(40+10), or 20 %.

Emergency lowering
The emergency lowering safety feature enables the actuator to be lowered in the event of a power failure or malfunction. This option is used in most medical and health care applications.

Encoder
A rotary or linear sensor device that, when connected to a control unit, can be used to determine the position of an electric linear actuator.

First failure safety
First failure safety is a control system utilising redundant microprocessors in which one processor monitors the functions of the other and shuts down the system if a malfunction in the microprocessor occurs.

Hall sensor
A sensor whose output changes based on changes in magnetic flux. Typically used for RPM, position, or current measurement.

IP protection
This standard describes a system for classifying the degrees of protection required by the enclosures of electrical equipment. Developed by the European Committee for Electro-technical Standardization (CENELEC), these standards are designed to numerically rate an electrical product based on the level of protection its enclosure provides.

Limit switches
A switch used to limit motion or travel in a particular direction. Mechanical devices that when activated open or close an electrical contact. When the contact is closed voltage will flow through the switch, when open no voltage will flow through the switch. Limit switches come in various physical sizes and configurations and can be mounted internally or externally.

Linear speed
Linear speed is the term used when we talk about the distance, in millimetres, the tube in an actuator moves linearly over a given period of time (mm/s.), moving a load from its starting point to a new position. The speed can vary in different ways, depending, for example, on the motor employed. Actuators with direct current (DC) motors

have a speed variation directly proportional to the load on the device. That is to say, the larger the load, the lower the speed and vice versa. Actuators with alternating current (AC) motors move at a constant speed, which is not affected by the load on the actuator. Other factors affecting speed include ambient temperature and how well or poorly the actuator is integrated within an application. An actuator integrated in such a way that it is subject to uneven loads wears abnormally, which results in increased friction forces and decreased speed.

Potentiometer
The potentiometer is a displacement transducer. It incorporates the sensor and transducer function into one. A typical potentiometer consists of a uniform coil of wire of an element of high resistance such as carbon, platinum or conductive plastic. This uniform coil makes up the resistive element of the potentiometer whose resistance is proportional to its length.

Power consumption
An expression of how much electricity the motor uses when working. For DC motors the power consumption is directly proportional to the load, and for AC motors the power consumption is constant. With alternating current, power consumption is low, so that simple cabling and other inexpensive accessories suffice. Installation is easy and the components are readily available. With battery operation, it is often adequate to use a small, lightweight battery that does not require much space and is relatively inexpensive.

Properties of ball screws
The ball screws (**fig. 24**) incorporated in SKF actuators are manufactured entirely from steel and equipped with a row of bearings located in a closed system between the nut and screw. The design yields extremely low friction coefficients between the nut and the screw, because of the rolling contact between the balls, the nut and raceway (similar to ball bearings). Wear is significantly reduced compared with a sliding screw, which results in a life span 10 times longer for a ball screw under the same working conditions. The durability of the screw also means that it tolerates extreme loads as well as high duty cycles. Thanks to its low frictional resistance, the ball screw can maintain a very low operating temperature. As a consequence, the ball screw is particularly well suited for situations where it is required to operate over long periods at high speeds. High efficiency is one of the main characteristics of ball screws. Thanks to this high efficiency, it is possible to use a motor half the size compared to a sliding screw design. This means that, as a user, you obtain a more economical solution. An actuator based on a ball screw has minimal play, and consequently its precision is significantly higher in applications where positioning and repetitive precision are important.

Fig. 24

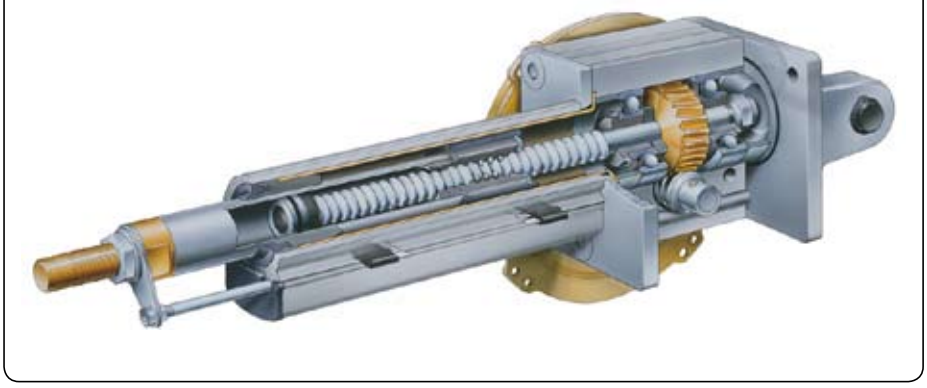

Fig. 25



Properties of the sliding screw
Sliding screws (**fig. 25**) are manufactured from rolled steel and the nut is made of plastic. This is a relatively cost effective design with favourable properties: plastic and metal work well together without binding. Also, actuators incorporating sliding screws usually offer a price advantage over those built around other types of screws. The sliding screw works very quietly, which means that it is well suited for office environments, hospitals, etc. Another significant advantage is the high friction coefficient in the sliding screw. This design is particularly well suited for actuators used in applications where they should be self locking, i.e., will not begin "moving backwards" under the weight of the load. For instance, when using the actuator to drive vertically adjustable tables, a sliding screw design allows you to put heavy loads on the surface of the table without changing its vertical position. In short, this means that no additional locking mechanism or brake will be necessary to keep the actuator in position when it is not in operation (however, e.g., in extreme vibrating application types additional arrangements may be needed to prevent back driving).

Pull force
The maximum retracting force that an electric linear actuator can produce in Newton (N). Some SKF actuators do not produce equal push and pull forces and others do not permit pull force at all.

Push force
The maximum extending force that an electric linear actuator can produce in Newton (N). Some SKF actuators do not produce equal push and pull forces and others do not permit pull force at all.

Retracted length
"Retracted length" is an expression for the shortest distance between the two fixed points on an actuator when the actuator is in its innermost position. The dimensions given reflect a measurement from the centre of the mounting holes, which means that the actuator requires a few millimetres beyond the given "retracted length" in order to fit. Remember that very few actuators are symmetrical. Thus it is important to note other dimensions as well for optimum fit and integration of the actuator. An actuator should always be mounted, insofar as is possible, so that it works linearly over its entire working range.

Self-locking
This property of the actuator means that it will not continue to move under the weight of the load after it has been switched off. The self-locking ability depends on the total efficiency of the actuator. If an actuator is not self-locking the function can be obtained by using a brake. On DC motors, the motor has to be short circuited. Self-locking load cannot, under certain circumstances, be completely ensured on all actuator models due to the type of application being run (e.g., high vibration levels)!

Supply voltage
Supply voltage is a measure of the voltage supplying a system, regardless of whether it employs AC or DC motors.

Static load (value not available in this brochure)
Maximal static load refers to the weight or mass that an actuator can be subjected to when standing still without causing permanent damage or causing the actuator to start "going backwards". Subjecting an actuator to loads in excess of stated values can risk permanent deformation to some parts of the actuator.

N.B. Remember that in many applications and installations, it is not the weight applied directly but rather the load caused by leverage or similar forces acting on the actuator that are the decisive factors. An actuator is strongest in its shortest position and weakest in its outermost, most extended position.

Stroke length
Describes the length in millimetres that an electric linear actuator will extend or retract. Most standard products are available in increments of 50 mm or 100 mm. Customer specific lengths are available, minimum order quantities apply.

Temperature
Ambient work site temperature can be highly significant when making a choice between different actuators. Extreme heat or cold can reduce the working capacity of the equipment. If the equipment is used in temperatures as low as about –20 °C, for instance, the lubricant can harden and impair the efficiency of the motor. If the temperatures climb up towards 50 °C, for instance, the grease can melt so that it drains away from the screw system, resulting in reduced or eliminated lubricant effect, increasing the risk of overheating in the motor.

Thermal protection
Protects drives and control units from overheating. A device that signals when an electrical assembly becomes too hot. The signal usually causes the shut-off of the electrical device.

Applications

In response to industry's ultimate need to produce more with less, SKF has combined its knowledge and experience with the latest technology to develop solutions for your specific conditions.

Whether your goal is to design equipment that provides more customer value, or to increase overall profitability, with SKF experience and expertise, you're likely to find a real solution.

Building automation

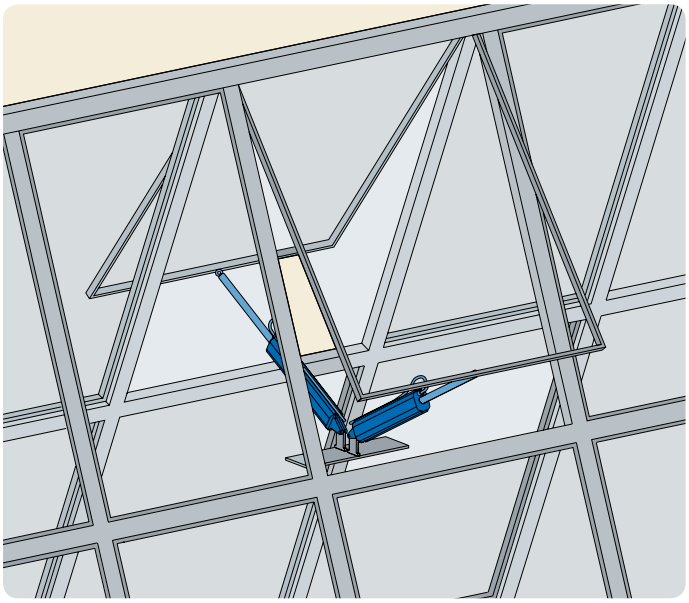

Components application
a) Electromechanical linear actuators

Welding gun

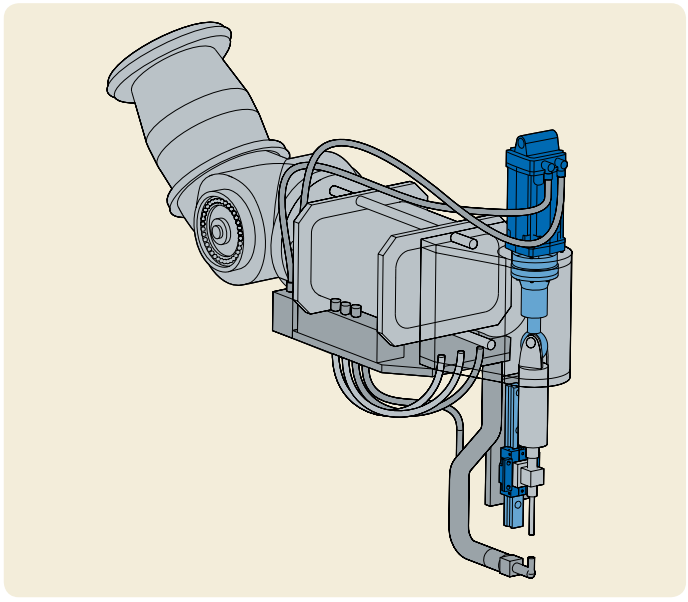

Components application
a) Compact electromechanical cylinder

Kitchen appliances

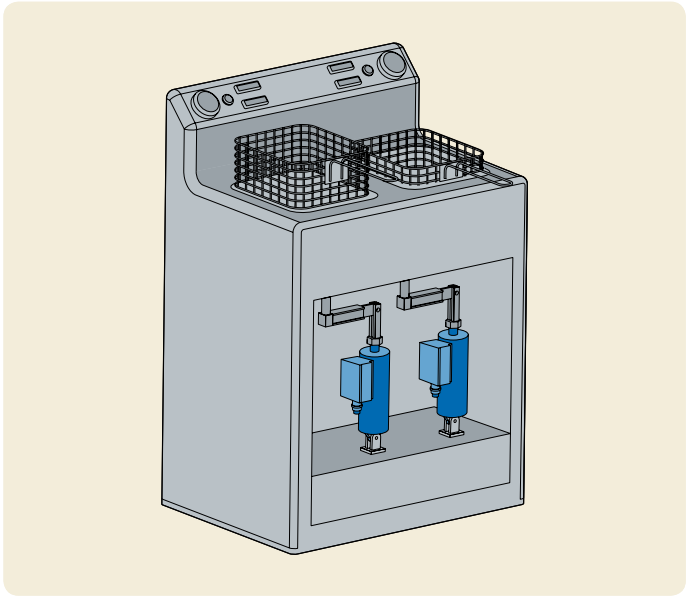

Components application
a) Electromechanical linear actuators

Working stations

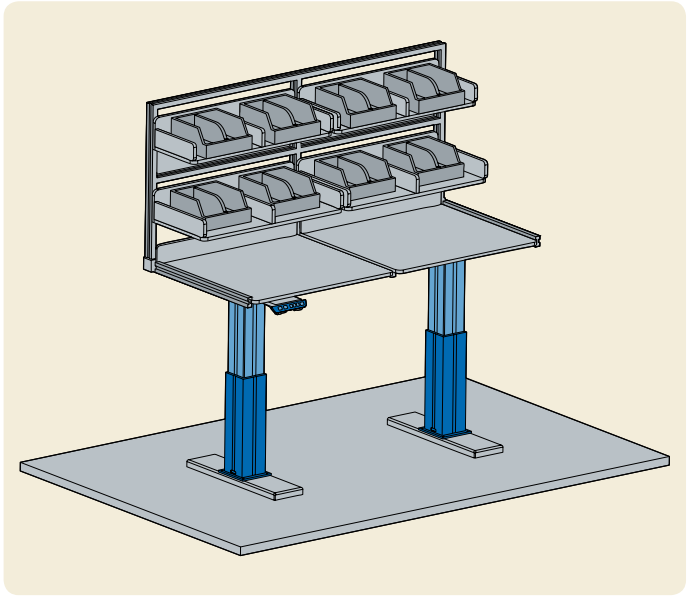

Components application
a) Telescopic pillars
b) Desk switch



The highest power lies beneath the smallest things



An ant can lift up to thirty times and transport up to fifty times its own weight.

It's the power of such small things that has inspired SKF to create solutions with reduced dimensions yet endowed with great potential for your applications.

Behind compactness and decreased weight lies high performance which will lead to greater precision and efficiency, while reducing cycle times to a minimum.

Miniature profile rail guides, miniature linear ball bearings, miniature ball screws, miniature slides – small units that can be placed almost anywhere, but always of the highest quality which you might expect from SKF.

Positioning systems

General

Positioning systems are compact and economic complete solutions. The assortment ranges from compact slides without drives through to highly dynamic, multi-axis systems with linear motor drive. SKF offers the following positioning systems:
Miniature slides (**fig. 1**),
Standard slides (**fig. 2**),
Dovetail slides (**fig. 3**),
Compact cross tables (**fig. 4**),
Precision slides without drive (**fig. 5**),
Linear ball bearing slides (**fig. 6**),
Profile rail slides (**fig. 7**).

LZM miniature slides
With the new LZM miniature slide SKF offers the ideal solution for linear motion applications for short strokes and compact boundary dimensions. The use of miniature slides has increased in medical applications, measurement technologies, pneumatics, micro mechanics and micro electronics assembly, semiconductor manufacturing and fibre optics. The different miniature slide components meet the highest precision standards; LZM miniature slides feature high running accuracy and smooth motion. The LZM are manufactured with all stainless steel components. Optimised hardness enables long endurance life and high performance within compact boundary dimensions. The miniature slides have been designed to ensure high system stiffness and precision guidance. Running accuracies of 2 µm over a stroke of 100 mm are attainable depending on the particular application. Ease of installation is another advantage of the LZM miniature slides. Unlike cross roller systems using 4 rails and cages to be assembled on the production floor, the LZM slide provides a complete slide that can simply be bolted into place without the use of precision devices to set preload. Every application provides new challenges for the modern designer. SKF will modify existing designs to meet your specific technical requirements.

Advantages for LZM miniature slides:
- Compact design
- High carrying capacity

Fig. 1



- Very good running accuracy
- Smooth running
- High stiffness
- Easy assembly

For dimensions, see table on **page 240**.

Operating precision (**table 1**)
Comparison of the different positioning components and systems.

Table 1

Operating precision (µm)	Guiding systems			Driving systems			Actuation systems	Positioning systems
0,1-1		Precision rail guides		Roller screws		Linear motors		Standard drives or linear motors with all guiding systems
1-10	Linear ball bearings		Standard slides		Ball screws			
10-100		Profile rail guides					Electro-mechanical actuators	
100-1 000								

Fig. 2



GCL standard slides

Slide top and base of steel. The slides are provided with standard patterns of mounting holes. The slide top carries tapped holes, the base plate counterbored holes for cylindrical screws to DIN 912. The slides are fitted with SKF precision rail guides with crossed roller units. Internal stops serve as stroke limit.

For dimensions, see table on **page 244**.

GCLA standard slides

Slide top and base of black anodised aluminium. In other respects, the design corresponds to that of the GCL slides except that they are lower in height.

For dimensions, see table on **page 246**.

RM standard slides

Especially small design. Slide top of steel, guidance via SKF precision rails with double-sided centre rail and crossed roller units. Internal stops serve as stroke limits.

For dimensions, see table on **page 248**.

Fig. 3



SSM and SSK dovetail slides

Slide top and base of grey cast iron. The slides are provided with standard patterns of mounting holes. Top and base plate both carry tapped holes. The slides have a lead screw drive. The SSM design has a micrometer knurl with vernier ring, while the SSK design is fitted with a hand crank. Both designs are fitted with a lateral locking device.

For dimensions, see table on **page 250**.

Fig. 4



TO and TS compact cross tables

Table top, centre and base of black anodised aluminium with central viewing hole. The slides are fitted with SKF precision rail guides incorporating crossed roller units. The TO design does not have a drive but is provided with one lateral locking device per axis. The TS design has a micrometer attachment that is springloaded in one direction. In addition, one lateral locking device is fitted per axis.

For dimensions, see table on **page 253**.

Fig. 5



RSM and RSK precision slides

Slide top and base of grey cast iron. The slides are provided with standard patterns of mounting holes. The slide top carries tapped holes, the base plate counterbored holes for cylindrical screws to DIN 912. They are fitted with SKF precision rail guides incorporating crossed roller units. The slides have a lead screw drive. The RSM design has a micrometer knurl with a vernier ring, while the RSK design is fitted with a hand crank.

For dimensions, see table on **page 254**.

Fig. 6



Fig. 7



LZBB and LZAB linear ball bearing slides

The slides are fitted with SKF linear ball bearings of ISO series 3. They are driven via SKF rolled thread ball screws attached on both sides. The slides are protected by bellows. The LZBB design has a closed housing. Shafts are attached on both sides in shaft blocks which also incorporate the bolt holes for attaching the slide. The LZAB design has an open housing. Shafts are attached over the entire length by shaft supports to prevent shaft deflection with large strokes or high loads. The slide is attached via the bolt holes in the two shaft supports.

For principal dimensions, see table on **page 256**.

LTB profile rail slides

SKF profile rail slides are state-of-the-art systems that offer high load-carrying capacity and accuracy.
They are available in five sizes:
110 – 170 – 235 – 320 – 400
with two drives: ball screws or linear motors, with three covers:
without cover – with bellows – with steel cover.

For principal dimensions, see table on **page 259**.

Complete systems

On special demand, SKF designs and manufactures complete systems, either from SKF standard components or special solutions, that are exactly tailored to the respective application.

The different specifications are given in **table 2**.

Table 2

Type	Precision	Load-carrying capacity	Dynamic capabilities	Speed
Miniature slides				
Standard slides				
Dovetail slides				
Compact cross tables				
Precision slides without drive				
Precision slides with drive				
Linear ball bearing slides				
Profile rail slides				
Complete systems				

N.B.:
In addition to this catalogue, all product brochures are available on **www.skf.com** *as PDF files.*

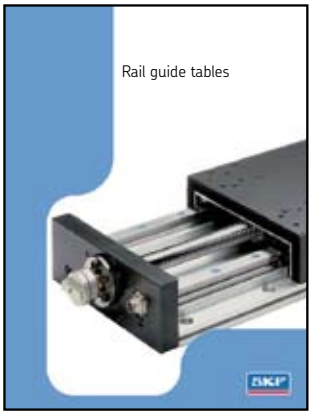

Publication nr. 5172 EN



Publication nr. 4211 EN



Publication nr. 4753 EN

Notes

Miniature slides

LZM

Ordering key

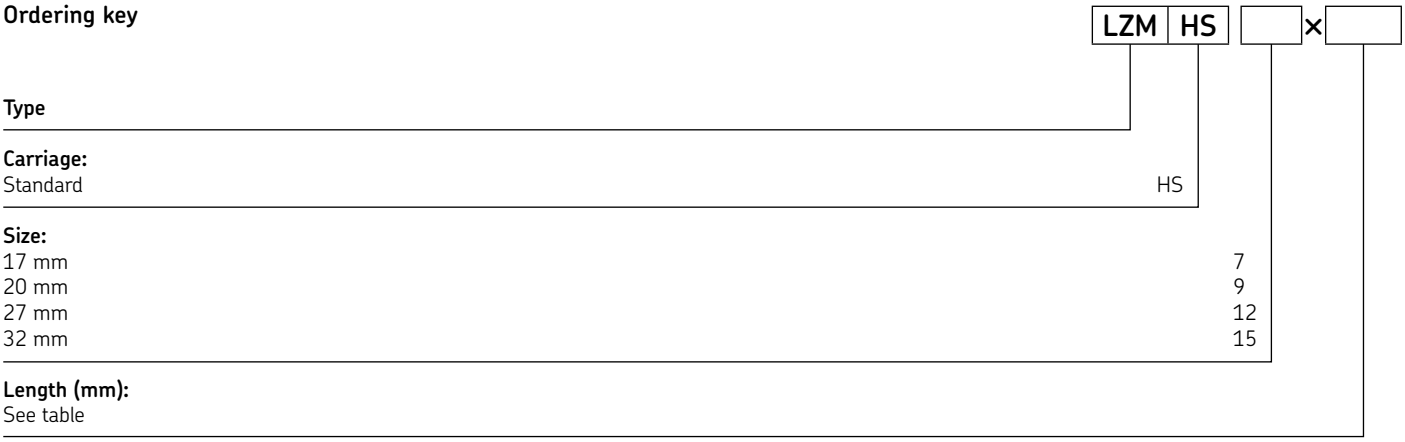

Example: LZM | HS | 15 × 165

Main dimensions for miniature slide units

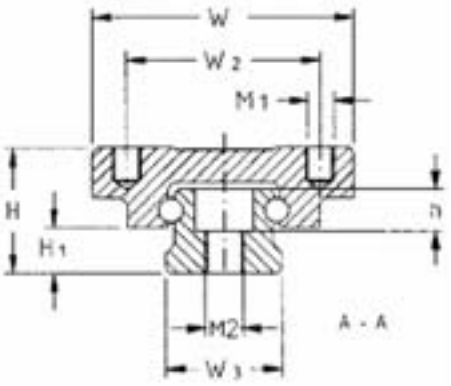

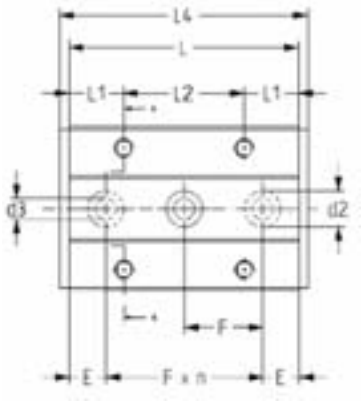

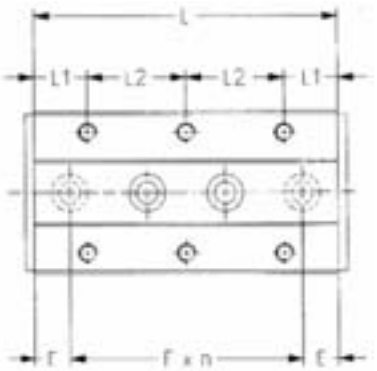

Designations	Dimensions									
	W	W_2	W_3	L_2	M_1×depth	d_3×d_2×h	H	H_1	M_2	F
	mm								–	mm
LZM HS 7	17	12	7	8	M2×2,5	2,5×4,5×2,5	8	2,35	M3	15
LZM HS 9	20	15	9	13	M3×3	3,5×6×3,5	10	3,55	M4	20
LZM HS 12	27	20	12	15	M3×3,5	3,5×6×4,5	13	4,7	M4	25
LZM HS 15	32	25	15	20	M3×4	3,5×6×4,5	16	6,0	M4	40

Designations	Dimensions				Max. stroke	Number of holes		Load-carrying capacities			
	L	L_4	E	L_1		Carriage	Rail	C	C_0	M_a /M_b	M_c
	mm					n		N		Nm	
LZM HS 7	26	29	5,5	5	24	6	2	1 000	1 700	3,5	6
	34	37	9,5	5	34	8	2	1 100	2 100	5,5	7
	50	53	10	5	50	12	3	1 500	3 100	12	10
	66	69	10,5	5	66	16	4	1 800	4 100	21	14
LZM HS 9	32	35	8	9,5	28	4	2	1 600	2 700	7	12
	42	45	11	8	40	6	2	1 900	3 400	11	15
	55	58	7,5	8	54	8	3	2 300	4 300	18	19
	81	84	10,5	8	78	12	4	3 000	6 500	43	29
	94	97	7	8	92	14	5	3 300	7 400	57	33
LZM HS 12	37	40	6	11	32	4	2	2 500	3 800	11	21
	51	54	13	10,5	47	6	2	3 100	5 300	22	28
	66	69	8	10,5	62	8	3	3 600	6 700	36	36
	96	99	10,5	10,5	95	12	4	4 700	9 700	76	52
	126	129	13	10,5	122	16	6	5 700	12 600	131	68
LZM HS 15	52	56	6	12,5	50	4	2	3 800	6 200	25	42
	85	89	22,5	12,5	80	8	2	5 400	10 400	73	70
	105	109	12,5	12,5	102	10	3	6 200	12 500	106	84
	165	169	22,5	12,5	162	16	4	8 400	19 500	264	131



No speed limit here



Can you believe that, if a human being could race at a speed proportional to that of a butterfly in full flight, he or she would reach 34 000 kilometres per hour?

It's only a hypothesis of course, but enough to inspire us to create tools able to surmount practically any limit including that of speed.

For example, the SKF linear motor slides, which are at their best where conventional slides have reached their limit, combine unbelievable speed with high precision.

Similarly, rotating ball nuts, thanks to the fixed screw, are capable of overcoming the critical speeds usually associated with ball screws, and can reach a speed rating of 90 000 Nd.

With SKF, maximum speed is an everyday norm.

Standard slides

GCL, GCLA, RM

Ordering key

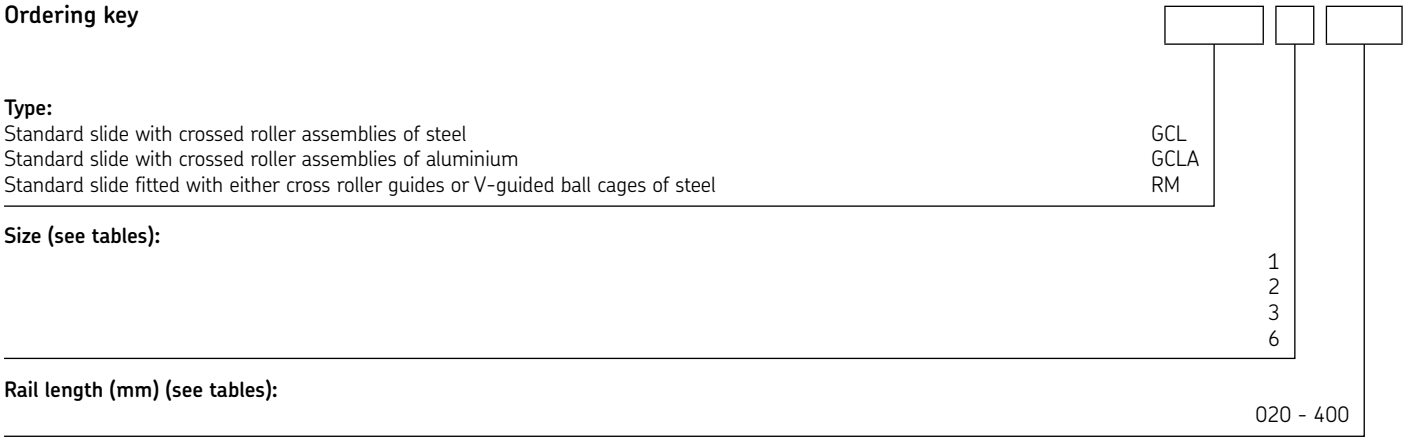

Example: **GCLA** **6** **400**

5

GCL

Standard slides with crossed roller assemblies, steel version, for manual positioning.

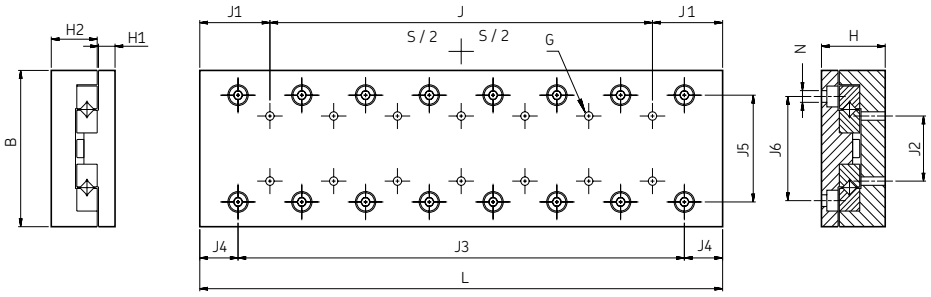

Designations	Dimensions			Stroke									
	B	H	L	S_1[1)]	S_2[1)]	G	H_1	H_2	J	J_1	J_2	J_3	J_4	J_5
	mm					–	mm							
GCL 2030	40	21	35	18	–	M3	6,5	14	–	17,5	15	1×15	10	25
GCL 2045	40	21	50	30	–	M3	6,5	14	1×15	17,5	15	2×15	10	25
GCL 2060	40	21	65	40	46	M3	6,5	14	2×15	17,5	15	3×15	10	25
GCL 2075	40	21	80	50	60	M3	6,5	14	3×15	17,5	15	4×15	10	25
GCL 2090	40	21	95	60	75	M3	6,5	14	4×15	17,5	15	5×15	10	25
GCL 2105	40	21	110	70	90	M3	6,5	14	5×15	17,5	15	6×15	10	25
GCL 2120	40	21	125	80	105	M3	6,5	14	6×15	17,5	15	7×15	10	25
GCL 3050	60	28	55	30	–	M4	9	18,5	–	27,5	25	1×25	15	39
GCL 3075	60	28	80	45	55	M4	9	18,5	1×25	27,5	25	2×25	15	39
GCL 3100	60	28	105	60	80	M4	9	18,5	2×25	27,5	25	3×25	15	39
GCL 3125	60	28	130	75	105	M4	9	18,5	3×25	27,5	25	4×25	15	39
GCL 3150	60	28	155	90	130	M4	9	18,5	4×25	27,5	25	5×25	15	39
GCL 3175	60	28	180	105	155	M4	9	18,5	5×25	27,5	25	6×25	15	39
GCL 3200	60	28	205	130	180	M4	9	18,5	6×25	27,5	25	7×25	15	39
GCL 6100	100	45	110	60	70	M6	13	31	–	55	50	1×50	30	64
GCL 6150	100	45	160	95	120	M6	13	31	1×50	55	50	2×50	30	64
GCL 6200	100	45	210	130	170	M6	13	31	2×50	55	50	3×50	30	64
GCL 6250	100	45	260	165	220	M6	13	31	3×50	55	50	4×50	30	64
GCL 6300	100	45	310	200	270	M6	13	31	4×50	55	50	5×50	30	64
GCL 6400	100	45	410	280	370	M6	13	31	6×50	55	50	7×50	30	64

[1)] S_1 Standard stroke order designation. e.g. GCL 2030
S_2 Extended stroke order designation. e.g. GCL 2030L

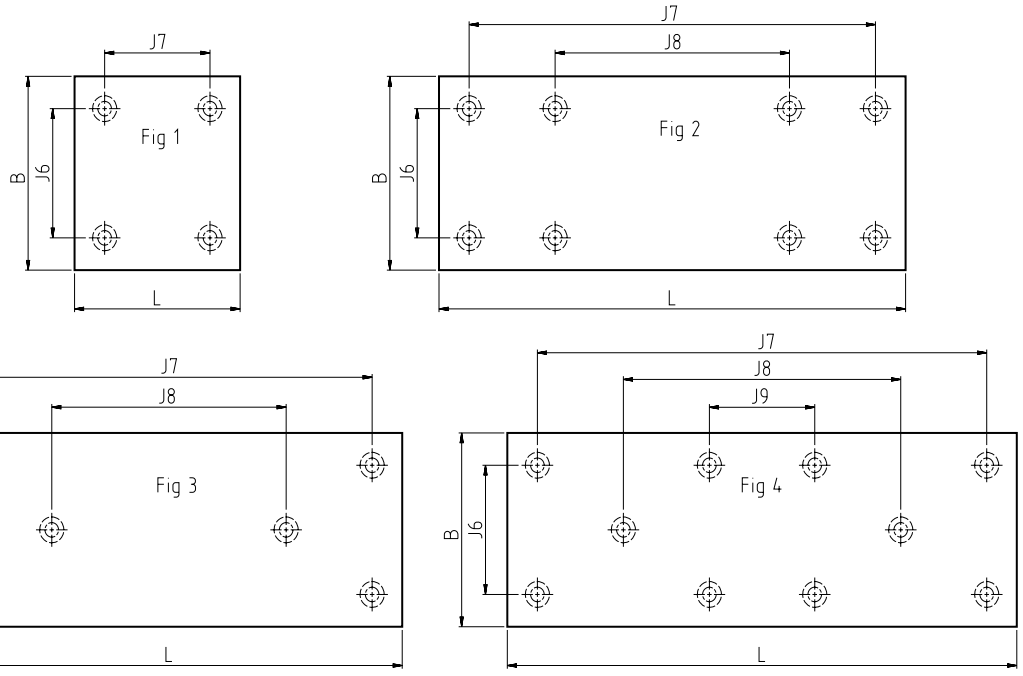

Designations	Dimensions						Load-carrying capacities with S_1	with S_2	Weight
	J_6	J_7	J_8	J_9	Fig.	N	C_0	C_0	G_5
	mm				n.		N		kg
GCL 2030	30	25	–	–	1	3,4	250	–	0,18
GCL 2045	30	40	–	–	1	3,4	360	–	0,26
GCL 2060	30	55	–	–	1	3,4	470	430	0,34
GCL 2075	30	70	40	–	2	3,4	580	540	0,42
GCL 2090	30	85	55	–	2	3,4	720	610	0,5
GCL 2105	30	100	70	–	2	3,4	830	720	0,58
GCL 2120	30	115	85	–	2	3,4	940	790	0,68
GCL 3050	40	35	–	–	1	4,5	480	–	0,57
GCL 3075	40	60	–	–	1	4,5	800	720	0,8
GCL 3100	40	85	–	–	1	4,5	1 040	880	1
GCL 3125	40	110	–	–	1	4,5	1 360	1 120	1,3
GCL 3150	40	135	85	–	3	4,5	1 600	1 280	1,5
GCL 3175	40	160	110	–	3	4,5	1 920	1 520	1,7
GCL 3200	40	185	135	85	4	4,5	2 080	1 680	2
GCL 6100	60	90	–	–	1	6,6	2 380	2 040	3,1
GCL 6150	60	140	–	–	1	6,6	3 740	3 060	4,5
GCL 6200	60	190	90	–	3	6,6	4 760	4 080	5,9
GCL 6250	60	240	140	–	3	6,6	6 120	5 100	7,2
GCL 6300	60	290	190	–	3	6,6	7 140	6 120	8,6
GCL 6400	60	390	290	190	4	6,6	7 820	6 120	11,4

GCLA

Standard slides with slide top and base made of black anodised aluminium, for manual positioning.
In other respects the design is similar to that of the GCL slides except for the slightly reduced height.

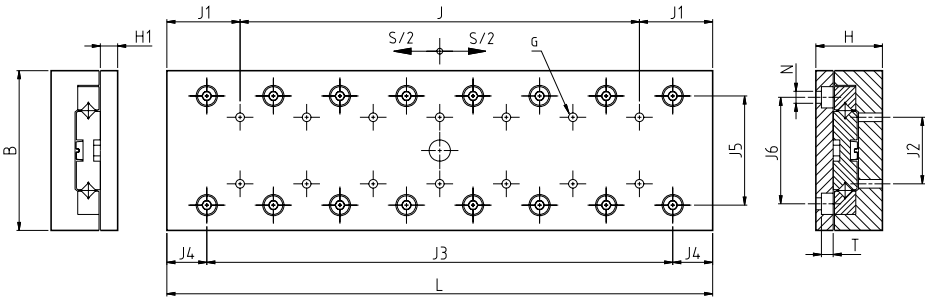

Designations	Dimensions			Stroke								
	B	H	L	S_1[1]	S_2[1]	G	H_1	J	J_1	J_2	J_3	J_4	J_5
	mm					–	mm						
GCLA 2030	40	21	35	15	–	M3	7	–	17,5	15	1×15	10	25
GCLA 2045	40	21	50	22	30	M3	7	1×15	17,5	15	2×15	10	25
GCLA 2060	40	21	65	30	45	M3	7	2×15	17,5	15	3×15	10	25
GCLA 2075	40	21	80	37	60	M3	7	3×15	17,5	15	4×15	10	25
GCLA 2090	40	21	95	45	75	M3	7	4×15	17,5	15	5×15	10	25
GCLA 2105	40	21	110	52	90	M3	7	5×15	17,5	15	6×15	10	25
GCLA 2120	40	21	125	60	105	M3	7	6×15	17,5	15	7×15	10	25
GCLA 3050	60	25	55	–	30	M4	8,25	–	27,5	25	1×25	15	41
GCLA 3075	60	25	80	37	55	M4	8,25	1×25	27,5	25	2×25	15	41
GCLA 3100	60	25	105	50	80	M4	8,25	2×25	27,5	25	3×25	15	41
GCLA 3125	60	25	130	62	105	M4	8,25	3×25	27,5	25	4×25	15	41
GCLA 3150	60	25	155	75	130	M4	8,25	4×25	27,5	25	5×25	15	41
GCLA 3175	60	25	180	87	155	M4	8,25	5×25	27,5	25	6×25	15	41
GCLA 3200	60	25	205	100	180	M4	8,25	6×25	27,5	25	7×25	15	41
GCLA 6100	100	40	110	50	70	M6	12	–	55	50	1×50	30	65
GCLA 6150	100	40	160	75	120	M6	12	1×50	55	50	2×50	30	65
GCLA 6200	100	40	210	100	170	M6	12	2×50	55	50	3×50	30	65
GCLA 6250	100	40	260	125	220	M6	12	3×50	55	50	4×50	30	65
GCLA 6300	100	40	310	150	270	M6	12	4×50	55	50	5×50	30	65
GCLA 6350	100	40	360	175	320	M6	12	5×50	55	50	6×50	30	65
GCLA 6400	100	40	410	200	370	M6	12	6×50	55	50	7×50	30	65

[1] S_2 Extended stroke order designation. e.g. GCL 2030L

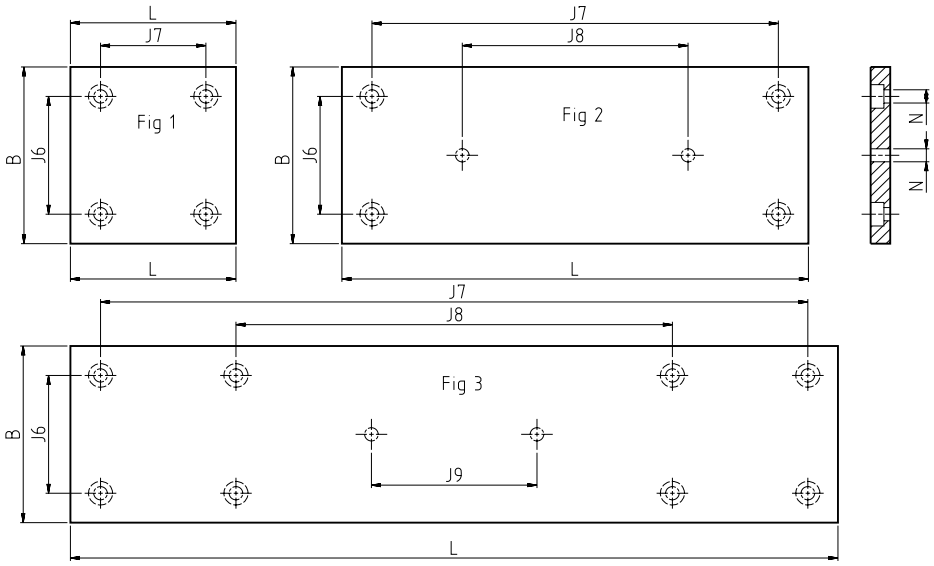

Designations	Dimensions						Load-carrying capacities		Weight
							with S_1	with S_2	
	J_6	J_7	J_8	J_9	Fig.	N	C_0	C_0	G_5
	mm				n.		N		kg
GCLA 2030	30	25	–	–	1	3,8	430	–	0,1
GCLA 2045	30	40	–	–	1	3,8	688	602	0,14
GCLA 2060	30	55	–	–	1	3,8	946	774	0,19
GCLA 2075	30	70	–	–	1	3,8	1 204	946	0,23
GCLA 2090	30	85	45	–	2	3,8	1 376	1 113	0,28
GCLA 2105	30	100	50	–	2	3,8	1 634	1 290	0,32
GCLA 2120	30	115	30	–	2	3,8	1 892	1 376	0,37
GCLA 3050	40	35	–	–	1	4,8	–	952	0,29
GCLA 3075	40	60	–	–	1	4,8	1 496	1 224	0,43
GCLA 3100	40	85	–	–	1	4,8	2 040	1 632	0,57
GCLA 3125	40	110	–	–	1	4,8	2 448	1 904	0,7
GCLA 3150	40	135	75	–	2	4,8	2 992	2 312	0,84
GCLA 3175	40	160	86	–	2	4,8	3 536	2 584	0,97
GCLA 3200	40	185	55	–	2	4,8	4 080	2 992	1,1
GCLA 6100	60	90	–	–	1	6,8	4 320	3 780	1,6
GCLA 6150	60	140	–	–	1	6,8	6 480	5 400	2,4
GCLA 6200	60	190	100	–	2	6,8	8 640	6 480	3,1
GCLA 6250	60	240	80	–	2	6,8	10 800	8 100	3,9
GCLA 6300	60	290	150	–	2	6,8	13 500	9 720	4,7
GCLA 6350	60	340	200	80	3	6,8	15 660	11 340	5,4
GCLA 6400	60	390	230	90	3	6.8	17 820	12 420	6,2

RM

Standard slides fitted with either cross roller rail guides or V-guided ball cages, for manual positioning; the opposing V-rails are screwed to a steel base plate. Slide top and bottom carry a standard pattern of mounting holes

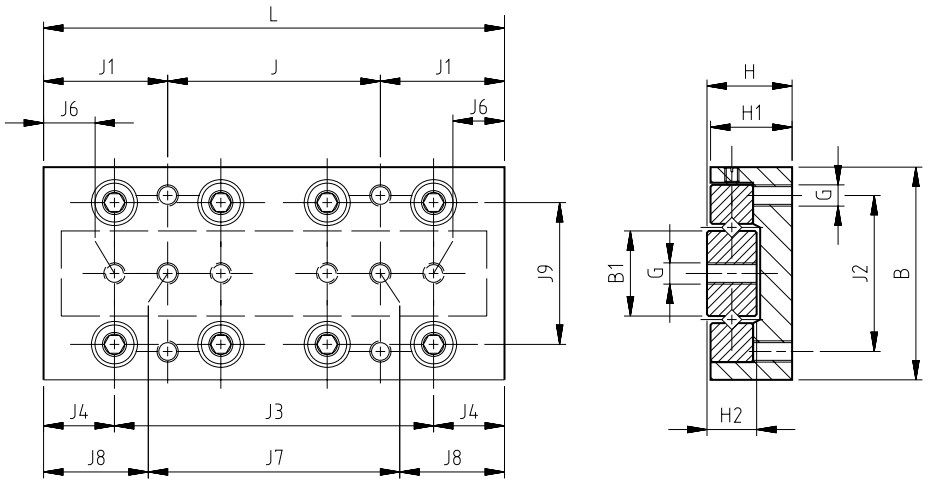

Designations	Dimensions			Stroke						
	B	H	L	S	B_1	G	H_1	H_2	J	J_1
	mm					–	mm			
RM 1020	20	8	25	12	7	M2,5	7,5	5	1×18	3,5
RM 1030	20	8	35	18	7	M2,5	7,5	5	1×28	3,5
RM 1040	20	8	45	25	7	M2,5	7,5	5	1×20	12,5
RM 1050	20	8	55	32	7	M2,5	7,5	5	1×30	12,5
RM 2060	30	12	65	40	12	M3	11,5	7	1×30	17,5
RM 2075	30	12	80	50	12	M3	11,5	7	1×45	17,5
RM 2090	30	12	95	60	12	M3	11,5	7	2×30	17,5
RM 3100	40	16	105	60	16	M4	15,5	9	1×50	27,5
RM 3125	40	16	130	75	16	M4	15,5	9	1×75	27,5
RM 3150	40	16	155	90	16	M4	15,5	9	2×50	27,5

Continued

Designations	Dimensions								Load-carrying capacities	Weight
	J_2	J_3	J_4	J_5	J_6	J_7	J_8	J_9	C_0	G_5
	mm								N	kg
RM 1020	14	1×10	7,5	2×7,5	5	1×18	3,5	12,6	208	0,025
RM 1030	14	2×10	7,5	2×10	7,5	1×20	7,5	12,6	364	0,025
RM 1040	14	3×10	7,5	3×10	7,5	1×28	8,5	12,6	464	0,025
RM 1050	14	4×10	7,5	4×10	7,5	1×30	12,5	12,6	572	0,025
RM 2060	22	3×15	10,0	3×15	10	–	–	20,0	860	0,16
RM 2075	22	4×15	10,0	4×15	10	–	–	20,0	1032	0,19
RM 2090	22	5×15	10,0	5×15	10	–	–	20,0	1290	0,23
RM 3100	30	3×25	15,0	3×25	15	–	–	28,5	1904	0,46
RM 3125	30	4×25	15,0	4×25	15	–	–	28,5	2312	0,58
RM 3150	30	5×25	15,0	5×25	15	–	–	28,5	2856	0,69

Slides, tables and compact cross tables

SSM / SSK, T0 / TS, RSM / RSK

Ordering key

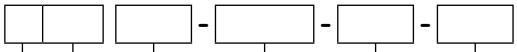

Type:

Precision slides with rail guide system, crossed rollers	R
Dovetail slides	S
Compact cross tables with rail guide system, crossed rollers	T

Versions:

Only valid for dovetail tables:	
For manual operation, with micrometer knurl	SM
For manual operation, with hand crank	SK
Only valid for precision tables:	
For manual operation, with micrometer knurl	SM
For manual operation, with hand crank	SK
Only valid for compact cross tables:	
For manual operation, without drive	0
For manual operation, with micrometer knurl	S

Table width B (mm) (see tables):

50 - 300

Length L_1 or dimension Sx Sy (mm):

L_1 for dovetail and precision slides	80 - 1010
Sx Sy for compact cross tables	025, 050, 100

Nominal stroke S (mm) (not for compact cross tables):

See tables

Designation suffix if desired:

Slides or tables made of aluminium, black anodised	A
Slides with thick top: only for precision slides	D
Slides with thick top and T-slots: dovetail and precision slides	DT
Locking device for dovetail slides (standard)	AR1
Locking device for precision slides and tables	AR2
Locking device for compact cross tables (standard)	AR3

Example 1:	R	SK	75	-	080	-	025	
Example 2:	S	SM	300	-	1010	-	500	- AR1
Example 3:	S	SK	50	-	080	-	025	- AR1
Example 4:	T	0	085	-	050	-		- AR3

Dovetail slides

SSM / SSK

SSM - with micrometer ring with spring preloading, allowing easy turning. One division equals 0,02 mm.

SSK - as SSM, but instead of knurled screw equipped with crank handle.

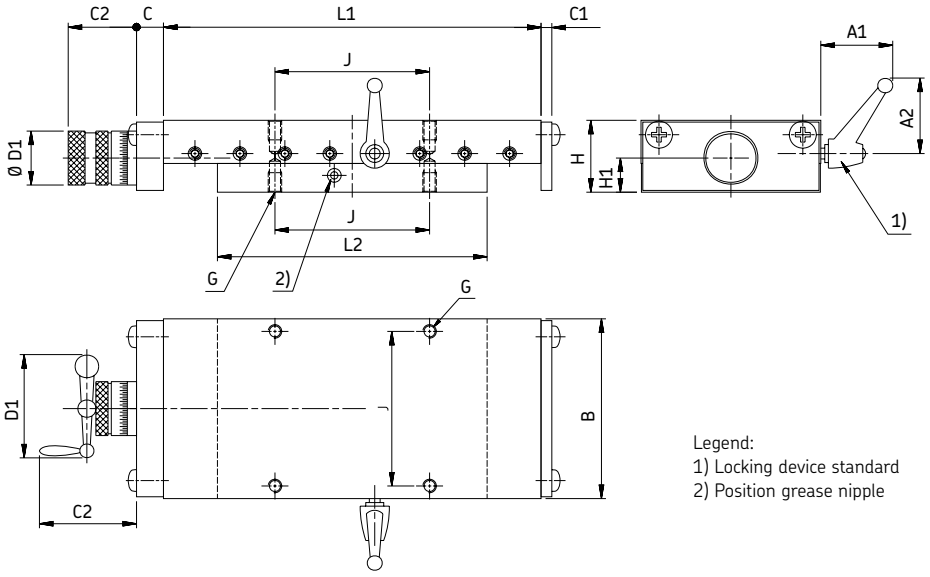

Legend:
1) Locking device standard
2) Position grease nipple

Designations	Dimensions				Stroke								Screw			Weight
	B	H	L_1	L_2	S	A_1	A_2	C	C_1	C_2	D_1	H_1	Ø	J	G	GG
	mm														–	kg
SSM–50.080.025	50	25	80	50	25	37	42	19	6	31	23,5	12,3	M6×1	37	M4	0,7
SSK–50.080.025	50	25	80	25	25	37	42	19	6	51	47	12,3	M6×1	37	M4	0,7
SSM–50.130.025	50	25	130	25	25	37	42	19	6	31	23,5	12,3	M6×1	37	M4	1,2
SSK–50.130.025	50	25	130	25	25	37	42	19	6	51	47	12,3	M6×1	37	M4	1,2
SSM–50.130.050	50	25	130	50	50	37	42	19	6	31	23,5	12,3	M6×1	37	M4	1
SSK–50.130.050	50	25	130	50	50	37	42	19	6	51	47	12,3	M6×1	37	M4	1
SSM–50.155.050	50	25	155	50	50	37	42	19	6	31	23,5	12,3	M6×1	37	M4	1,3
SSK–50.155.050	50	25	155	50	50	37	42	19	6	51	47	12,3	M6×1	37	M4	1,3
SSM–50.155.075	50	25	155	75	75	37	42	19	6	31	23,5	12,3	M6×1	37	M4	1,2
SSK–50.155.075	50	25	155	75	75	37	42	19	6	51	47	12,3	M6×1	37	M4	1,2
SSM–50.180.075	50	25	180	75	75	37	42	19	6	31	23,5	12,3	M6×1	37	M4	1,4
SSK–50.180.075	50	25	180	75	75	37	42	19	6	51	47	12,3	M6×1	37	M4	1,4
SSM–50.205.100	50	25	205	100	100	37	42	19	6	31	23,5	12,3	M6×1	37	M4	1,7
SSK–50.205.100	50	25	205	100	100	37	42	19	6	51	47	12,3	M6×1	37	M4	1,7
SSM–75.105.025	75	32	105	75	25	38	42	21	6	38	30	15	M10×1	62	M5	1,9
SSK–75.105.025	75	32	105	75	25	38	42	21	6	54	47	15	M10×1	62	M5	1,9
SSM–75.155.050	75	32	155	100	50	38	42	21	6	38	30	15	M10×1	62	M5	2,6
SSK–75.155.050	75	32	155	100	50	38	42	21	6	54	47	15	M10×1	62	M5	2,6
SSM–75.205.050	75	32	205	150	50	38	42	21	6	38	30	15	M10×1	62	M5	3,4
SSK–75.205.050	75	32	205	150	50	38	42	21	6	54	47	15	M10×1	62	M5	3,4
SSM–75.155.075	75	32	155	75	75	38	42	21	6	38	30	15	M10×1	62	M5	2,3
SSK–75.155.075	75	32	155	75	75	38	42	21	6	54	47	15	M10×1	62	M5	2,3
SSM–75.180.075	75	32	180	100	75	38	42	21	6	38	30	15	M10×1	62	M5	2,8
SSK–75.180.075	75	32	180	100	75	38	42	21	6	54	47	15	M10×1	62	M5	2,8
SSM–75.205.100	75	32	205	100	100	38	42	21	6	38	30	15	M10×1	62	M5	3
SSK–75.205.100	75	32	205	100	100	38	42	21	6	54	47	15	M10×1	62	M5	3
SSM–75.255.100	75	32	255	150	100	38	42	21	6	38	30	15	M10×1	62	M5	3,8
SSK–75.255.100	75	32	255	150	100	38	42	21	6	54	47	15	M10×1	62	M5	3,8
SSM–75.305.150	75	32	305	150	150	38	42	21	6	38	30	15	M10×1	62	M5	4,2
SSK–75.305.150	75	32	305	150	150	38	42	21	6	54	47	15	M10×1	62	M5	4,2

Continued

SSM / SSK

(Continued)

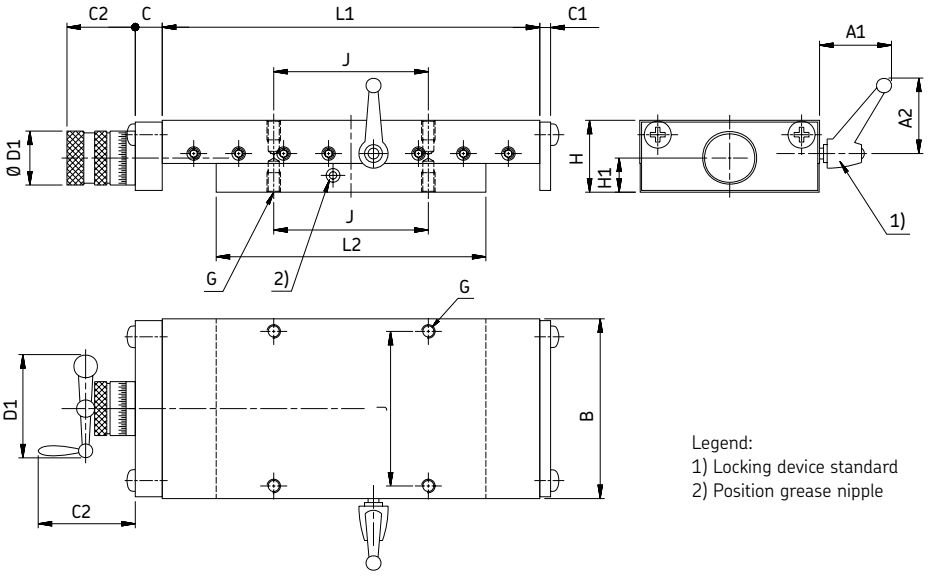

Legend:
1) Locking device standard
2) Position grease nipple

5

Designations	Dimensions				Stroke								Screw			Weight
	B	H	L_1	L_2	S	A_1	A_2	C	C_1	C_2	D_1	H_1	∅	J	G	GG
	mm														–	kg
SSM–100.160.050	100	40	160	100	50	40	45	21	6	38	30	19	M10×1	74	M6	4,4
SSK–100.160.050	100	40	160	100	50	40	45	21	6	54	47	19	M10×1	74	M6	4,4
SSM–100.260.050	100	40	260	200	50	40	45	21	6	38	30	19	M10×1	74	M6	7,2
SSK–100.260.050	100	40	260	200	50	40	45	21	6	54	47	19	M10×1	74	M6	7,2
SSM–100.210.100	100	40	210	100	100	40	45	21	6	38	30	19	M10×1	74	M6	5,1
SSK–100.210.100	100	40	210	100	100	40	45	21	6	54	47	19	M10×1	74	M6	5,1
SSM–100.310.100	100	40	310	200	100	40	45	21	6	38	30	19	M10×1	74	M6	7,9
SSK–100.310.100	100	40	310	200	100	40	45	21	6	54	47	19	M10×1	74	M6	7,9
SSM–100.310.150	100	40	310	150	150	40	45	21	6	38	30	19	M10×1	74	M6	7,1
SSK–100.310.150	100	40	310	150	150	40	45	21	6	54	47	19	M10×1	74	M6	7,1
SSM–100.410.150	100	40	410	250	150	40	45	21	6	38	30	19	M10×1	74	M6	10
SSK–100.410.150	100	40	410	250	150	40	45	21	6	54	47	19	M10×1	74	M6	10
SSM–100.410.200	100	40	410	200	200	40	45	21	6	38	30	19	M10×1	74	M6	9,2
SSK–100.410.200	100	40	410	200	200	40	45	21	6	54	47	19	M10×1	74	M6	9,2
SSM–100.510.200	100	40	510	300	200	40	45	21	6	38	30	19	M10×1	74	M6	12,1
SSK–100.510.200	100	40	510	300	200	40	45	21	6	54	47	19	M10×1	74	M6	12,1
SSM–150.310.100	150	50	310	200	100	45	62	28	8	53	47	24	Tr16×2	130	M8	15,4
SSK–150.310.100	150	50	310	200	100	45	62	28	8	92	103	24	Tr16×2	130	M8	15,4
SSM–150.510.100	150	50	510	400	100	45	62	28	8	53	47	24	Tr16×2	130	M8	26
SSK–150.510.100	150	50	510	400	100	45	62	28	8	92	103	24	Tr16×2	130	M8	26
SSM–150.410.200	150	50	410	200	200	45	62	28	8	53	47	24	Tr16×2	130	M8	17,8
SSK–150.410.200	150	50	410	200	200	45	62	28	8	92	103	24	Tr16×2	130	M8	17,8
SSM–150.610.200	150	50	610	400	200	45	62	28	8	53	47	24	Tr16×2	130	M8	28,5
SSK–150.610.200	150	50	610	400	200	45	62	28	8	92	103	24	Tr16×2	130	M8	28,5
SSM–150.510.300	150	50	510	200	300	45	62	28	8	53	47	24	Tr16×2	130	M8	20,2
SSK–150.510.300	150	50	510	200	300	45	62	28	8	92	103	24	Tr16×2	130	M8	20,2
SSM–150.710.300	150	50	710	400	300	45	62	28	8	53	47	24	Tr16×2	130	M8	30,9
SSK–150.710.300	150	50	710	400	300	45	62	28	8	92	103	24	Tr16×2	130	M8	30,9
SSM–150.710.400	150	50	710	300	400	45	62	28	8	53	47	24	Tr16×2	130	M8	28
SSK–150.710.400	150	50	710	300	400	45	62	28	8	92	103	24	Tr16×2	130	M8	28
SSM–150.810.400	150	50	810	400	400	45	62	28	8	53	47	24	Tr16×2	130	M8	33,3
SSK–150.810.400	150	50	810	400	400	45	62	28	8	92	103	24	Tr16×2	130	M8	33,3

Continued

SSM / SSK

(Continued)

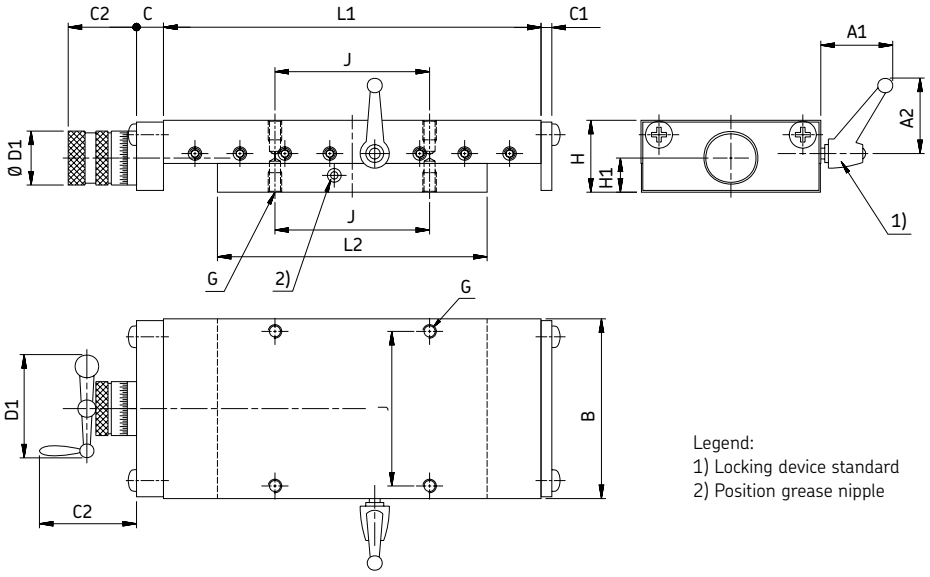

Legend:
1) Locking device standard
2) Position grease nipple

Designations	Dimensions				Stroke								Screw			Weight
	B	H	L_1	L_2	S	A_1	A_2	C	C_1	C_2	D_1	H_1	∅	J	G	GG
	mm														–	kg
SSM–200.310.100	200	60	310	200	100	45	62	28	8	53	47	25	Tr16×2	170	M8	24,7
SSK–200.310.100	200	60	310	200	100	45	62	28	8	92	103	25	Tr16×2	170	M8	24,7
SSM–200.410.100	200	60	410	300	100	45	62	28	8	53	47	25	Tr16×2	170	M8	33,2
SSK–200.410.100	200	60	410	300	100	45	62	28	8	92	103	25	Tr16×2	170	M8	33,2
SSM–200.510.200	200	60	510	300	200	45	62	28	8	53	47	25	Tr16×2	170	M8	37,2
SSK–200.510.200	200	60	510	300	200	45	62	28	8	92	103	25	Tr16×2	170	M8	37,2
SSM–200.610.200	200	60	610	400	200	45	62	28	8	53	47	25	Tr16×2	170	M8	45,7
SSK–200.610.200	200	60	610	400	200	45	62	28	8	92	103	25	Tr16×2	170	M8	45,7
SSM–200.610.300	200	60	610	300	300	45	62	28	8	53	47	25	Tr16×2	170	M8	41,1
SSK–200.610.300	200	60	610	300	300	45	62	28	8	92	103	25	Tr16×2	170	M8	41,1
SSM–200.710.300	200	60	710	400	300	45	62	28	8	53	47	25	Tr16×2	170	M8	49,6
SSK–200.710.300	200	60	710	400	300	45	62	28	8	92	103	25	Tr16×2	170	M8	49,6
SSM–200.710.400	200	60	710	300	400	45	62	28	8	53	47	25	Tr16×2	170	M8	45
SSK–200.710.400	200	60	710	300	400	45	62	28	8	92	103	25	Tr16×2	170	M8	45
SSM–200.810.400	200	60	810	400	400	45	62	28	8	53	47	25	Tr16×2	170	M8	53,5
SSK–200.810.400	200	60	810	400	400	45	62	28	8	92	103	25	Tr16×2	170	M8	53,5
SSM–300.410.100	300	75	410	300	100	55	74	20	10	80	66	34,5	Tr20×4	260	M10	64,6
SSK–300.410.100	300	75	410	300	100	55	74	20	10	146	125	34,5	Tr20×4	260	M10	64,6
SSM–300.510.100	300	75	510	400	100	55	74	20	10	80	66	34,5	Tr20×4	260	M10	80,7
SSK–300.510.100	300	75	510	400	100	55	74	20	10	146	125	34,5	Tr20×4	260	M10	80,7
SSM–300.510.200	300	75	510	300	200	55	74	20	10	80	66	34.5	Tr20×4	260	M10	72.4
SSK–300.510.200	300	75	510	300	200	55	74	20	10	146	125	34,5	Tr20×4	260	M10	72,4
SSM–300.610.200	300	75	610	400	200	55	74	20	10	80	66	34,5	Tr20×4	260	M10	88,6
SSK–300.610.200	300	75	610	400	200	55	74	20	10	146	125	34,5	Tr20×4	260	M10	88,6
SSM–300.710.300	300	75	710	400	300	55	74	20	10	80	66	34,5	Tr20×4	260	M10	96,4
SSK–300.710.300	300	75	710	400	300	55	74	20	10	146	125	34,5	Tr20×4	260	M10	96,4
SSM–300.810.400	300	75	810	400	400	55	74	20	10	80	66	34,5	Tr20×4	260	M10	104,3
SSK–300.810.400	300	75	810	400	400	55	74	20	10	146	125	34,5	Tr20×4	260	M10	104,3
SSM–300.1010.500	300	75	1 010	500	500	55	74	20	10	80	66	34,5	Tr20×4	260	M10	128,3
SSK–300.1010.500	300	75	1 010	500	500	55	74	20	10	146	125	34,5	Tr20×4	260	M10	128,3

Compact cross tables

TO / TS

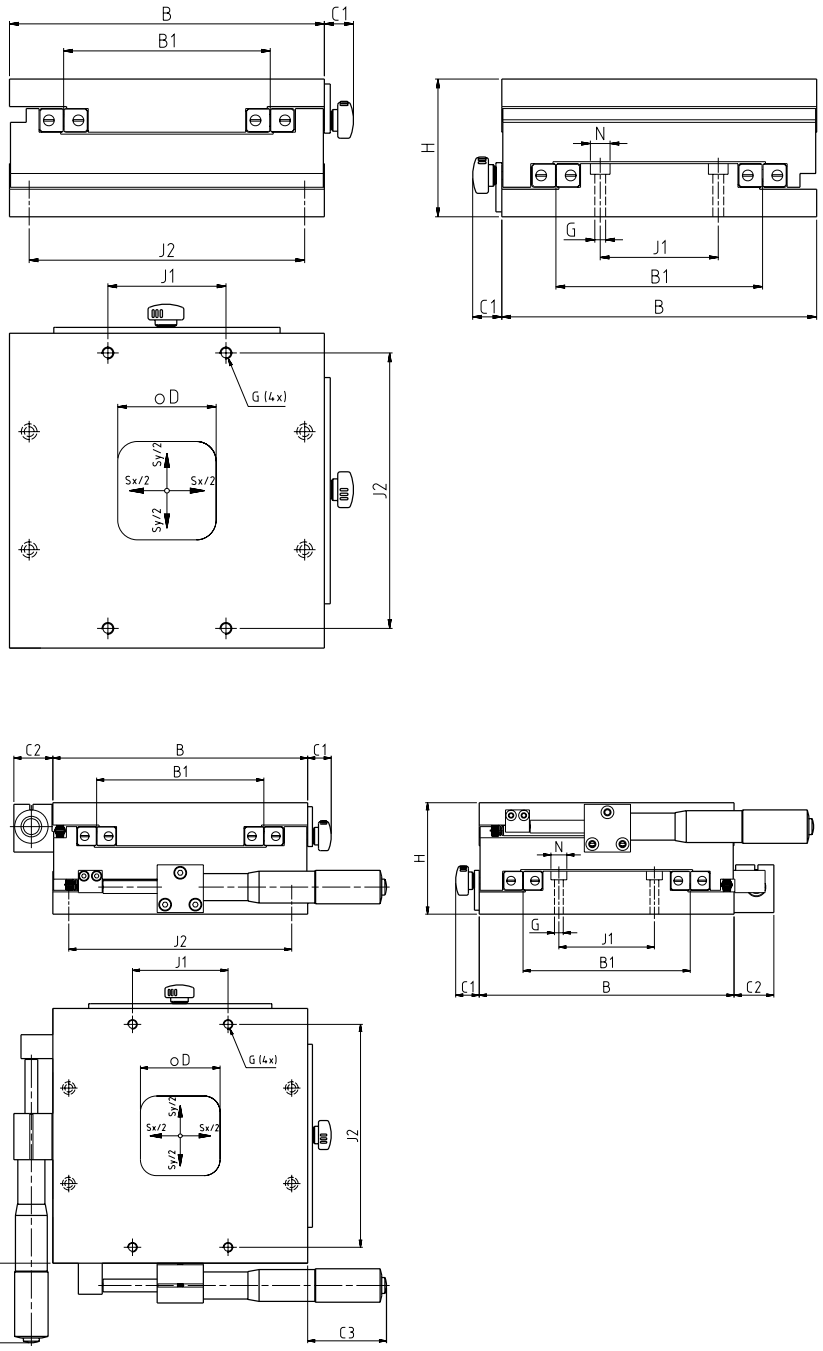

Designations	Dimensions			Stroke									Load-carrying capacities	Weight
	B	H	Sx Sy	B_1	C_1	C_2	C_3	D	N	G	J_1	J_2	C_0	GA
	mm									–	mm		N	kg
TO 085	85	40	50	48	16	–	–	22	∅ 4,2 / ∅ 8 × 4,5 (4 ×)	M5	20	70	3 400	0,8
TS 085	85	40	25	48	16	22,5	33	22	–	M5	20	70	4 200	1,1
TO 160	160	70	100	105	15	–	–	50	∅ 5 / ∅ 10 × 5,5 (4 ×)	M6	60	140	12 400	4
TS 160	160	70	50	105	15	25	50	50	–	M6	60	140	15 600	4,8

Precision slides

RSM / RSK

Precision tables for manual operation with micrometer knurl RSM, with hand crank RSK

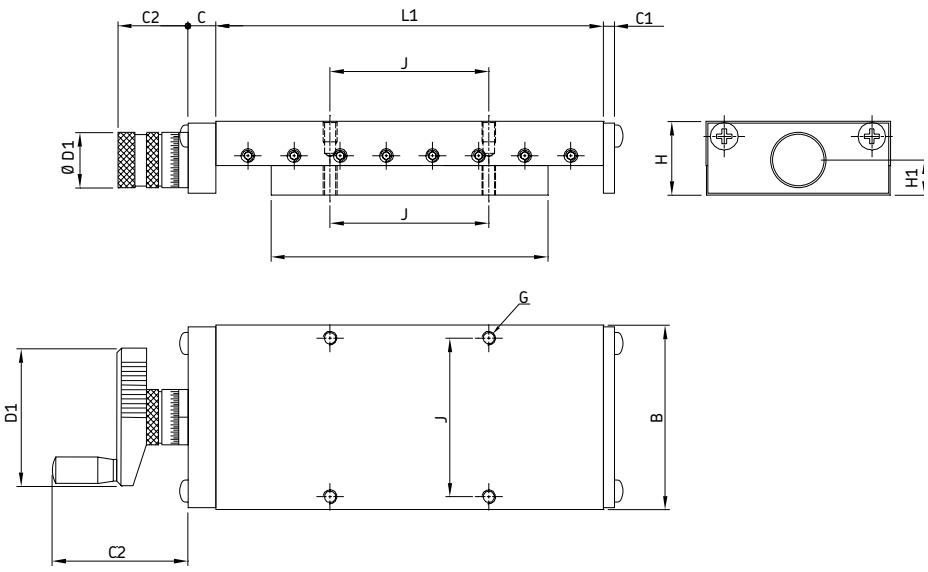

Designations	Dimensions				Stroke						Screw				Load-carrying capacities	Weight
	B	H	L_1	L_2	S	C	C_1	C_2	D_1	H_1	∅	J	G	N	C_0	GG
	mm												–	mm	kg	kg
RSM50.080.025	50	25	80	55	25	14	5	37,5	23	12,3	M6×1	37	M4	4,5	1,7	0,7
RSM50.130.025	50	25	130	105	25	14	5	37,5	23	12,3	M6×1	37	M4	4,5	3,3	1,1
RSM50.130.050	50	25	130	80	50	14	5	37,5	23	12,3	M6×1	37	M4	4,5	2,5	1
RSM50.130.075	50	25	130	55	75	14	5	37,5	23	12,3	M6×1	37	M4	4,5	1,7	0,9
RSM50.180.075	50	25	180	105	75	14	5	37,5	23	12,3	M6×1	37	M4	4,5	3,3	1,3
RSM50.180.100	50	25	180	80	100	14	5	37,5	23	12,3	M6×1	37	M4	4,5	2,5	1,2
RSM75.130.025	75	32	130	105	25	15	6	46	30	15	M10×1	62	M4	4,5	3,4	2,2
RSK75.130.025	75	32	130	105	25	15	6	88	71	15	M10×1	62	M4	4,5	3,4	2,2
RSM75.180.050	75	32	180	130	50	15	6	46	30	15	M10×1	62	M4	4,5	5,1	3
RSK75.180.050	75	32	180	130	50	15	6	88	71	15	M10×1	62	M4	4,5	5,1	3
RSM75.180.025	75	32	180	150	50	15	6	46	30	15	M10×1	62	M4	4,5	4,25	2,8
RSK75.180.025	75	32	180	150	50	15	6	88	71	15	M10×1	62	M4	4,5	4,25	2,8
RSM75.180.075	75	32	180	105	75	15	6	46	30	15	M10×1	62	M4	4,5	3,4	2,6
RSK75.180.075	75	32	180	105	75	15	6	88	71	15	M10×1	62	M4	4,5	3,4	2,6
RSM75.230.075	75	32	230	155	75	15	6	46	30	15	M10×1	62	M4	4,5	5,1	3,4
RSK75.230.075	75	32	230	155	75	15	6	88	71	15	M10×1	62	M4	4,5	5,1	3,4
RSM75.230.075	75	32	230	130	100	15	6	46	30	15	M10×1	62	M4	4,5	4,25	3,3
RSK75.230.075	75	32	230	130	100	15	6	88	71	15	M10×1	62	M4	4,5	4,25	3,3
RSM75.230.075	75	32	230	105	125	15	6	46	30	15	M10×1	62	M4	4,5	3,4	3,1
RSK75.230.075	75	32	230	105	125	15	6	88	71	15	M10×1	62	M4	4,5	3,4	3,1

Continued

Designations	Dimensions				Stroke						Screw				Load-carrying capacities	Weight
	B	H	L_1	L_2	S	C	C_1	C_2	D_1	H_1	∅	J	G	N	C_0	GG
	mm												–	mm	kg	kg
RSM100.260.050	100	40	260	210	50	15	6	46	30	15,5	M10×1	74	M6	6,6	8,8	6,8
RSK100.260.050	100	40	260	210	50	15	6	88	71	15,5	M10×1	74	M6	6,6	8,8	6,8
RSM100.310.050	100	40	310	260	50	15	6	46	30	15,5	M10×1	74	M6	6,6	10,9	8,2
RSK100.310.050	100	40	310	260	50	15	6	88	71	15,5	M10×1	74	M6	6,6	10,9	8,2
RSM100.360.050	100	40	360	310	50	15	6	46	30	15,5	M10×1	74	M6	6,6	13	9,6
RSK100.360.050	100	40	360	310	50	15	6	88	71	15,5	M10×1	74	M6	6,6	13	9,6
RSM100.310.100	100	40	310	210	100	15	6	46	30	15,5	M10×1	74	M6	6,6	8,8	7,5
RSK100.310.100	100	40	310	210	100	15	6	88	71	15,5	M10×1	74	M6	6,6	8,8	7,5
RSM100.360.100	100	40	360	260	100	15	6	46	30	15,5	M10×1	74	M6	6,6	10,9	8,9
RSK100.360.100	100	40	360	260	100	15	6	88	71	15,5	M10×1	74	M6	6,6	10,9	8,9
RSM100.410.100	100	40	410	310	100	15	6	46	30	15,5	M10×1	74	M6	6,6	13	10
RSK100.410.100	100	40	410	310	100	15	6	88	71	15,5	M10×1	74	M6	6,6	13	10
RSM100.360.150	100	40	360	210	150	15	6	46	30	15,5	M10×1	74	M6	6,6	8,8	8,2
RSK100.360.150	100	40	360	210	150	15	6	88	71	15,5	M10×1	74	M6	6,6	8,8	8,2
RSM100.410.150	100	40	410	260	150	15	6	46	30	15,5	M10×1	74	M6	6,6	10,9	9,6
RSK100.410.150	100	40	410	260	150	15	6	88	71	15,5	M10×1	74	M6	6,6	10,9	9,6
RSM100.460.150	100	40	460	310	150	15	6	46	30	15,5	M10×1	74	M6	6,6	13	11
RSK100.460.150	100	40	460	310	150	15	6	88	71	15,5	M10×1	74	M6	6,6	13	11
RSM100.460.200	100	40	460	260	200	15	6	46	30	15,5	M10×1	74	M6	6,6	10,9	10
RSK100.460.200	100	40	460	260	200	15	6	88	71	15,5	M10×1	74	M6	6,6	10,9	10
RSM150.410.100	150	50	410	310	100	20	8	63	47	24	Tr16×2	116	M8	9	53	20
RSK150.410.100	150	50	410	310	100	20	8	122	102	24	Tr16×2	116	M8	9	53	20
RSM150.510.100	150	50	510	410	100	20	8	63	47	24	Tr16×2	116	M8	9	71	25
RSK150.510.100	150	50	510	410	100	20	8	122	102	24	Tr16×2	116	M8	9	71	25
RSM150.610.100	150	50	610	510	100	20	8	63	47	24	Tr16×2	116	M8	9	88	30
RSK150.610.100	150	50	610	510	100	20	8	122	102	24	Tr16×2	116	M8	9	88	30
RSM150.510.200	150	50	510	310	200	20	8	63	47	24	Tr16×2	116	M8	9	53	22
RSK150.510.200	150	50	510	310	200	20	8	122	102	24	Tr16×2	116	M8	9	53	22
RSM150.610.200	150	50	610	410	200	20	8	63	47	24	Tr16×2	116	M8	9	71	28
RSK150.610.200	150	50	610	410	200	20	8	122	102	24	Tr16×2	116	M8	9	71	28
RSM150.710.200	150	50	710	510	200	20	8	63	47	24	Tr16×2	116	M8	9	88	33
RSK150.710.200	150	50	710	510	200	20	8	122	102	24	Tr16×2	116	M8	9	88	33
RSM150.610.300	150	50	610	310	300	20	8	63	47	24	Tr16×2	116	M8	9	53	25
RSK150.610.300	150	50	610	310	300	20	8	122	102	24	Tr16×2	116	M8	9	53	25
RSM150.710.300	150	50	710	410	300	20	8	63	47	24	Tr16×2	116	M8	9	71	30
RSK150.710.300	150	50	710	410	300	20	8	122	102	24	Tr16×2	116	M8	9	71	30
RSM150.810.300	150	50	810	510	300	20	8	63	47	24	Tr16×2	116	M8	9	88	36
RSK150.810.300	150	50	810	510	300	20	8	122	102	24	Tr16×2	116	M8	9	88	36
RSM150.810.400	150	50	810	410	400	20	8	63	47	24	Tr16×2	116	M8	9	71	33
RSK150.810.400	150	50	810	410	400	20	8	122	102	24	Tr16×2	116	M8	9	71	33

Linear ball bearing table with drive

LZAB, LZBB

Ordering key

LZ		-		-		-	K	

Type

Design:

Open design	AB
Closed design	BB

Slide width B (mm):
See tables

Total length of slide unit L (mm):
See tables

Screw ∅ (mm) - screw lead (mm):

Screw ∅ 12 - screw lead 05	1205
Screw ∅ 16 - screw lead 05	1605
Screw ∅ 20 - screw lead 05	2005
Screw ∅ 25 - screw lead 05	2505
Screw ∅ 25 - screw lead 10	2510

Example: LZ AB - 230 - 1060 - K 1205

LZBB *(On request)*

Linear ball bearing slides with closed housing and ball screw

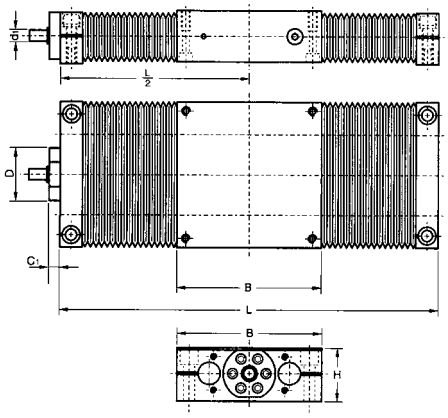

Designations	Dimensions			Nominal Stroke*		Screw data			
	B	H	L	S_1	S_2	n_{max}	d_1	D	C_1
	mm					1/min	mm		
LZBB 100.336.K1205	100	38	336	120	195	5 100	6	38	24
LZBB 100.636.K1205	100	38	636	310	495	3 450	6	38	24
LZBB 100.936.K1205	100	38	936	495	795	1 600	6	38	24
LZBB 100.1236.K1205	100	38	1 236	685	1 095	920	6	38	24
LZBB 100.1536.K1205	100	38	1 536	875	1 395	600	6	38	24
LZBB 130.340.K1605	130	48	340	115	165	3 800	10	47	28
LZBB 130.640.K1605	130	48	640	330	465	3 800	10	47	28
LZBB 130.940.K1605	130	48	940	545	765	2 150	10	47	28
LZBB 130.1240.K1605	130	48	1 240	755	1 065	1 250	10	47	28
LZBB 130.1540. K1605	130	48	1 540	970	1 365	800	10	47	28
LZBB 130.1840.K1605	130	48	1 840	1 185	1 665	560	10	47	28
LZBB 160.410.K2005	160	58	410	145	195	3 050	12	55	36
LZBB 160.650.K2005	160	58	650	325	435	3 050	12	55	36
LZBB 160.1010.K2005	160	58	1 010	595	795	2 450	12	55	36
LZBB 160.1250.K2005	160	58	1 250	780	1 035	1 600	12	55	36
LZBB 160.1610.K2005	160	58	1 610	1 050	1 395	960	12	55	36
LZBB 160.1850.K2005	160	58	1 850	1 230	1 635	730	12	55	36
LZBB 180.350.K2005	180	67	350	80	115	3 050	12	55	36
LZBB 180.650.K2005	180	67	650	300	415	3 050	12	55	36
LZBB 180.950.K2005	180	67	950	515	715	2 800	12	55	36
LZBB 180.1250.K2005	180	67	1 250	740	1 015	1 600	12	55	36
LZBB 180.1550.K2005	180	67	1 550	960	1 315	1 050	12	55	36
LZBB 180.1850.K2005	180	67	1 850	1 175	1 615	730	12	55	36
LZBB 180.2150.K2005	180	67	2 150	1 400	1 915	540	12	55	36
LZBB 180.2450.K2005	180	67	2 450	1 620	2 215	420	12	55	36
LZBB 230.460.K2505	230	84	460	120	165	2 450	14	68	36
LZBB 230.660.K2505	230	84	660	275	365	2 450	14	68	36
LZBB 230.1060.K2505	230	84	1 060	580	765	2 450	14	68	36
LZBB 230.1260.K2505	230	84	1 260	730	965	2 050	14	68	36
LZBB 230.1660.K2505	230	84	1 660	1 035	1 365	1 200	14	68	36
LZBB 230.1860.K2505	230	84	1 860	1 185	1 565	940	14	68	36
LZBB 230.2260.K2505	230	84	2 260	1 490	1 965	640	14	68	36
LZBB 230.2460.K2505	230	84	2 460	1 640	2 165	540	14	68	36
LZBB 230.2860.K2505	230	84	2 860	1 945	2 565	400	14	68	36
LZBB 230.460.K2510	230	84	460	120	165	2 450	14	68	36
LZBB 230.660.K2510	230	84	660	275	365	2 450	14	68	36
LZBB 230.1060.K2510	230	84	1 060	580	765	2 450	14	68	36
LZBB 230.1260.K2510	230	84	1 260	730	965	2 050	14	68	36
LZBB 230.1660.K2510	230	84	1 660	1 035	1 365	1 200	14	68	36
LZBB 230.1860.K2510	230	84	1 860	1 185	1 565	940	14	68	36
LZBB 230.2260.K2510	230	84	2 260	1 490	1 965	640	14	68	36
LZBB 230.2460.K2510	230	84	2 460	1 640	2 165	540	14	68	36
LZBB 230.2860.K2510	230	84	2 860	1 945	2 565	400	14	68	36

* Maximum stroke between end stops: S_1 with bellows (standard version); S_2 without bellows (special version)

LZAB *(On request)*

Linear ball bearing slides with open housing and ball screw

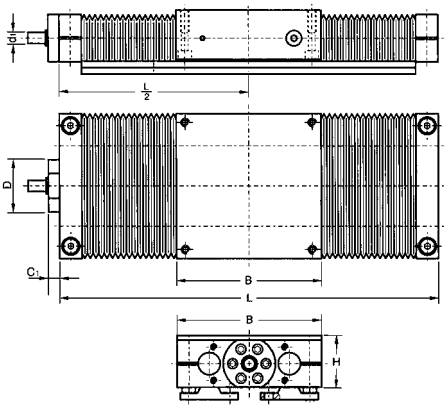

Designations	Dimensions			Nominal Stroke*		Screw data			
	B	H	L	S_1	S_2	n_{max}	d_1	D	C_1
	mm					1/min	mm		
LZAB 100.336.K1205	100	48	336	115	195	5 100	6	38	24
LZAB 100.636.K1205	100	48	636	295	495	3 450	6	38	24
LZAB 100.936.K1205	100	48	936	475	795	1 600	6	38	24
LZAB 100.1236.K1205	100	48	1 236	655	1 095	920	6	38	24
LZAB 100.1536.K1205	100	48	1 536	835	1 395	600	6	38	24
LZAB 130.340.K1605	130	57	340	110	165	3 800	10	47	28
LZAB 130.640.K1605	130	57	640	320	465	3 800	10	47	28
LZAB 130.940.K1605	130	57	940	530	765	2 150	10	47	28
LZAB 130.1240.K1605	130	57	1 240	740	1 065	1 250	10	47	28
LZAB 130.1540.K1605	130	57	1 540	950	1 365	800	10	47	28
LZAB 130.1840.K1605	130	57	1 840	1 155	1 665	560	10	47	28
LZAB 160.410.K2005	160	66	410	140	195	3 050	12	55	36
LZAB 160.650.K2005	160	66	650	320	435	3 050	12	55	36
LZAB 160.1010.K2005	160	66	1 010	585	795	2 450	12	55	36
LZAB 160.1250.K2005	160	66	1 250	765	1 035	1 600	12	55	36
LZAB 160.1610.K2005	160	66	1 610	1 035	1 395	960	12	55	36
LZAB 160.1850.K2005	160	66	1 850	1 210	1 635	730	12	55	36
LZAB 180.350.K2005	180	77	350	85	115	3 050	12	55	36
LZAB 180.650.K2005	180	77	650	320	415	3 050	12	55	36
LZAB 180.950.K2005	180	77	950	550	715	2 800	12	55	36
LZAB 180.1250.K2005	180	77	1 250	785	1 015	1 600	12	55	36
LZAB 180.1550.K2005	180	77	1 550	1 020	1 315	1 050	12	55	36
LZAB 180.1850.K2005	180	77	1 850	1 250	1 615	730	12	55	36
LZAB 180.2150.K2005	180	77	2 150	1 485	1 915	540	12	55	36
LZAB 180.2450.K2005	180	77	2 450	1 720	2 215	420	12	55	36
LZAB 230.460.K2505	230	95	460	120	165	2 450	14	68	36
LZAB 230.660.K2505	230	95	660	275	365	2 450	14	68	36
LZAB 230.1060.K2505	230	95	1 060	580	765	2 450	14	68	36
LZAB 230.1260.K2505	230	95	1 260	730	965	2 050	14	68	36
LZAB 230.1660.K2505	230	95	1 660	1 035	1 365	1 200	14	68	36
LZAB 230.1860.K2505	230	95	1 860	1 185	1 565	940	14	68	36
LZAB 230.2260.K2505	230	95	2 260	1 490	1 965	640	14	68	36
LZAB 230.2460.K2505	230	95	2 460	1 640	2 165	540	14	68	36
LZAB 230.2860.K2505	230	95	2 860	1 945	2 565	400	14	68	36
LZAB 230.460.K2510	230	95	460	120	365	2 450	14	68	36
LZAB 230.660.K2510	230	95	660	275	365	2 450	14	68	36
LZAB 230.1060.K2510	230	95	1 060	580	765	2 450	14	68	36
LZAB 230.1260.K2510	230	95	1 260	730	965	2 050	14	68	36
LZAB 230.1660.K2510	230	95	1 660	1 035	1 365	1 200	14	68	36
LZAB 230.1860.K2510	230	95	1 860	1 185	1 565	940	14	68	36
LZAB 230.2260.K2510	230	95	2 260	1 490	1 965	640	14	68	36
LZAB 230.2460.K2510	230	95	2 460	1 640	2 165	540	14	68	36
LZAB 230.2860.K2510	230	95	2 860	1 945	2 565	400	14	68	36

* Maximum stroke between end stops: S_1 with bellows (standard version); S_2 without bellows (special version)

Profile rail guide slides

LTB with screw drive

Ordering key

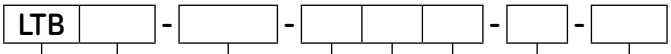

Type

Width of table:
Width of bottom part (see dimension specifications) 110 to 400

Length of table:
L_1 length of bottom part (see dimension specifications) 150 to 2860

Driving possibilities:
No preload SH
No preload SX
Preloaded TN
Preloaded TL

Screw diameter:
12 to 40

Screw lead:
05 to 40

Covers:
Without cover D0
With bellows BL
With steel cover SC

Precision class:
Low precision P10
Medium precision P5
High precision P2
Highest precision P1

Example: LTB 235 - 0880 - TN 25 05 - BL - P2

LTB with screw drive

SKF profile rail slides are state-of-the-art systems that offer high load-carrying capacity and accuracy.
They are available in five sizes:
110 - 170 - 235 - 320 - 400
with three covers:
without cover - with bellows - with steel cover

With bellows

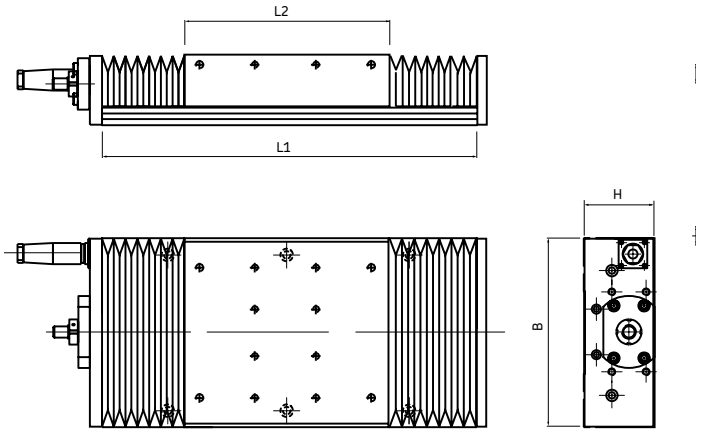

With steel cover

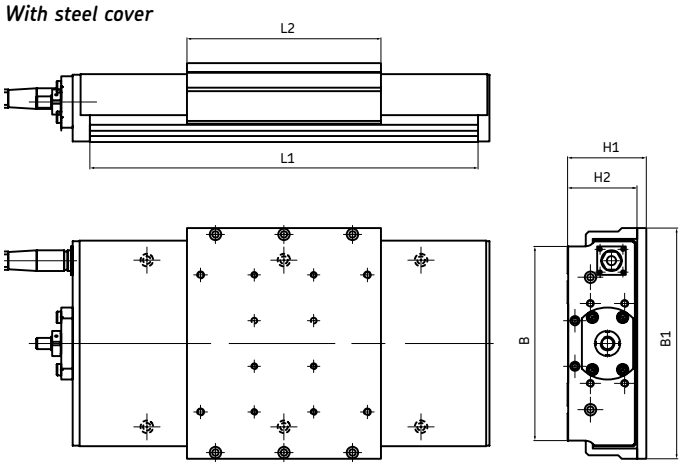

Designations	Dimensions							Stroke							Screw	Pitch	
	B	B_1	H	H_1	H_2	L_1	L_2	S_1 [1]	S_2 [2]	F_{oz} [3]	F_{oy}	M_{ox} [4]	M_{oy}	M_{oz}	∅	P	C_{oa} [5]
	mm															kg	kg
LTB 110	110	122	40	47	41	150 ... 950	110	20 ... 505	30 ... 830	17,1	8,5	0,69	0,58	0,29	12	5 ... 10	3,5 ... 7,1
LTB 170	170	202	60	69	61	220 ... 1 600	170	35 ... 1 085	40 ... 1 420	54	27	3,1	2,5	1,2	16	5 ... 16	6,4 ... 12,7
LTB 235	235	275	85	97	87	280 ... 2 860	235	35 ... 2 195	35 ... 2 615	97,6	48,8	7,6	6,8	3,4	25	5 ... 25	11,2 ... 31
LTB 320	320	365	115	138	118	580 ... 2 860	350	195 ... 2 180	220 ... 2 500	121,6	60,8	13,4	13,4	6,7	32	5 ... 40	20,5 ... 55
LTB 400	400	–	135	–	–	620 ... 2 860	450	145 ... 2 135	160 ... 2 400	216	108	29,2	29,2	14,6	40	5 ... 40	35,1 ... 64

1) Maximum stroke between end stops, with bellows
2) Maximum stroke between end stops, with steel cover
3) Maximum static load per table in X and Y
4) Maximum static moments in X, Y and Z
5) Maximum static load per screw

Profile rail guide slides, preferred range

LTB

SKF profile rail guide slides LTB of the preferred range are a price-efficient alternative to the in-house production. The LTB preferred range shows 2 widths in 3 lengths each and can be delivered in 2 working weeks. The slides are equipped with preloaded profile rails and preloaded ball screw, with bellows covers, end switches and motor coupling.

LTB110.L1.TN1205-BL-P2/V

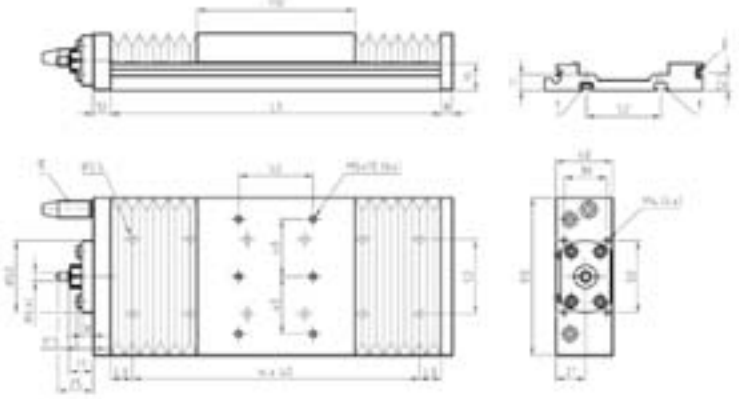

LTB170.L1.TN1605-BL-P2/V

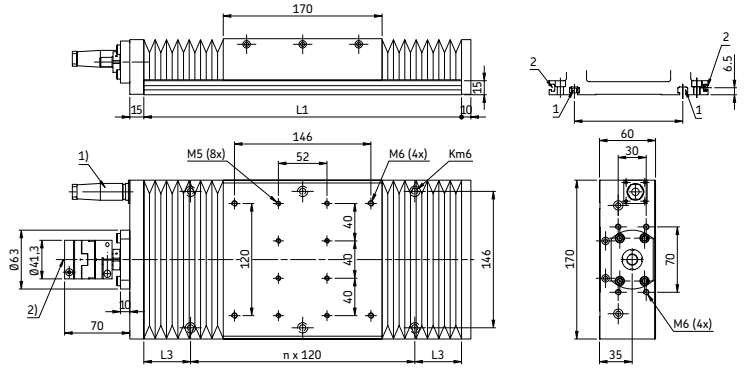

LTB235.L1.TN2505-BL-P2/V

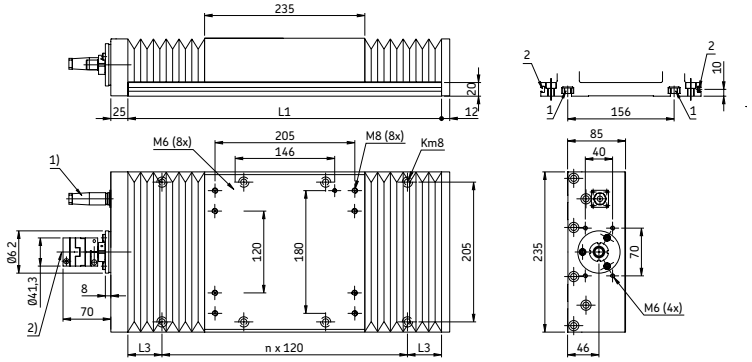

Designations	Dimensions		Stroke[1)]		Weight	Screw data		
	L_1	L_3	S	n		d_0	p	n_{max}
	mm			–	kg	mm		1/min
LTB110,230,TN1205-BL-P2	230	15	40	5	1,8	12	5	7 500
LTB110,350,TN1205-BL-P2	350	15	110	5	2,4	12	5	7 500
LTB170,340,TN1605-BL-P2/V	340	50	105	2	7,1	16	5	5 620
LTB170,520,TN1605-BL-P2/V	520	20	240	4	9,2	16	5	5 620
LTB170,700,TN1605-BL-P2/V	700	50	380	5	11,3	16	5	5 620
LTB235,520,TN2505-BL-P2/V	520	20	215	4	20	25	5	3 600
LTB235,700,TN2505-BL-P2/V	700	50	365	5	24,1	25	5	3 600
LTB235,880,TN2505-BL-P2/V	880	20	515	7	28,1	25	5	3 600

[1)] Max. stroke between limit switches



Integration means efficiency

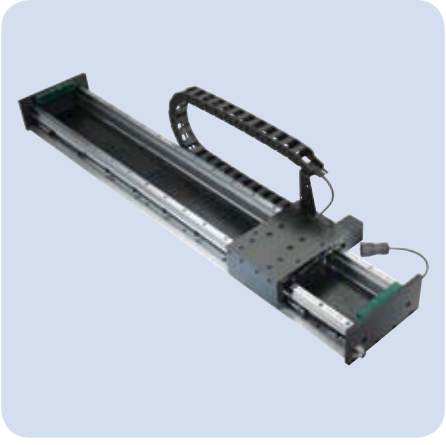

Bees represent what is probably the most eloquent example of a society within the natural world. They exhibit a primordial model of social caste with subdivision of role, as well as full control over defence, labour and even reproduction.

Small organisational wonders of this kind have provided inspiration to SKF in the creation of solutions which transcend single components, resulting in complete units and systems incorporating a wide range of products, to meet the requirements of each individual customer.

With SKF, even the smallest things become great.

Applications

In response to industry's ultimate need to produce more with less, SKF has combined its knowledge and experience with the latest technology to develop solutions for your specific conditions. Whether your goal is to design equipment that provides more customer value, or to increase overall profitability, with SKF experience and expertise you're likely to find a real solution.

Inspection machine for electronics

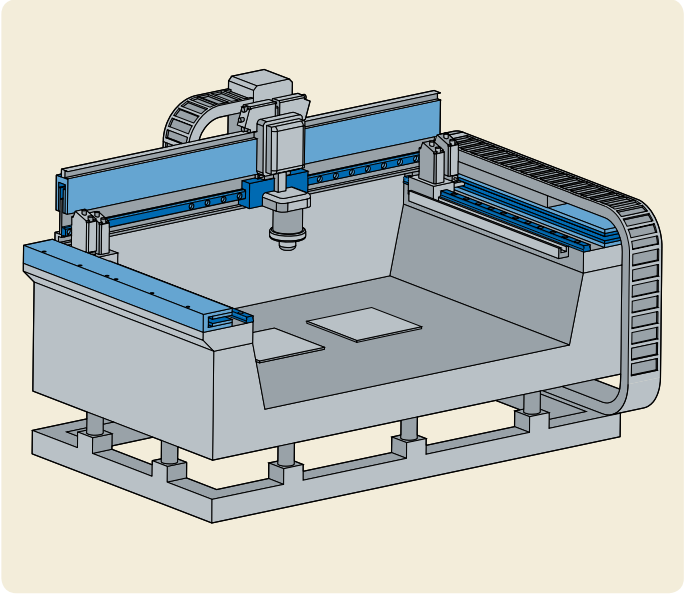

Components application
a) Profile rail guides
b) Linear motors

Testing and 3D measurement machine

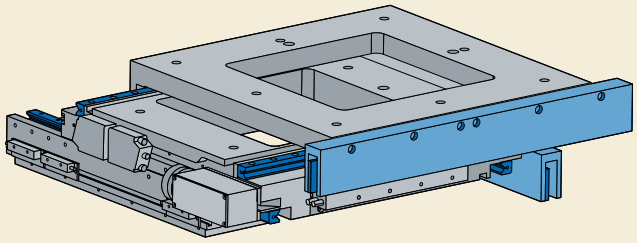

Components application
a) Precision rail guides
b) Linear motors



There's no power without performance



Most people think of the cheetah as the fastest animal because it can reach a speed of 100 kilometres per hour and can accelerate up to 70 in 2 seconds. Certainly this is amazing, but the cheetah doesn't possess the stamina of the gazelle which can race at 100 kilometres per hour for several minutes.

SKF has drawn inspiration from this meeting of power with performance.

Tools like the compact electro-mechanical cylinders combine the features of high acceleration, speed, compact dimensions, reliability and long duration.

With SKF, your applications will run properly for many years to come.

Customized solutions

Standard plug & play electromechanical cylinder

SKF cylinders using SKF planetary roller screws are expanding the limits of linear cylinders. They are designed for long life, high acceleration and high force applications. The cylinders use brushless servo-motor technology, with an in-line direct drive as standard. The high performance electromechanical cylinder consists of an SKF planetary roller screw directly driven through a coupling by a brushless motor. The roller screw converts rotary motion into linear movement.

Benefits
- The power of hydraulics
- The velocity of pneumatics

More information is available in **publication 5338**.





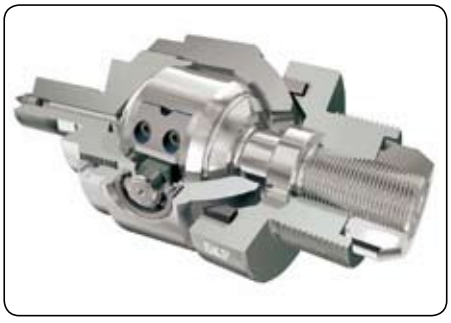

Compact electromechanical cylinder

Compact for all applications:
This product range provides high power density in a small package. Approximately 40 % smaller than standard electromechanical cylinders, there is the added advantage of reduced weight. Ideal for fixed and robot mounted applications. Whatever the requirement, CEMC cylinders provide a compact and dynamic solution, maximum performance and value through high availability, productivity and consequent low costs through the life of the product.

Benefits
- High power and reliability
- Compact and dynamic solution

More information is available in **publication 5338**.

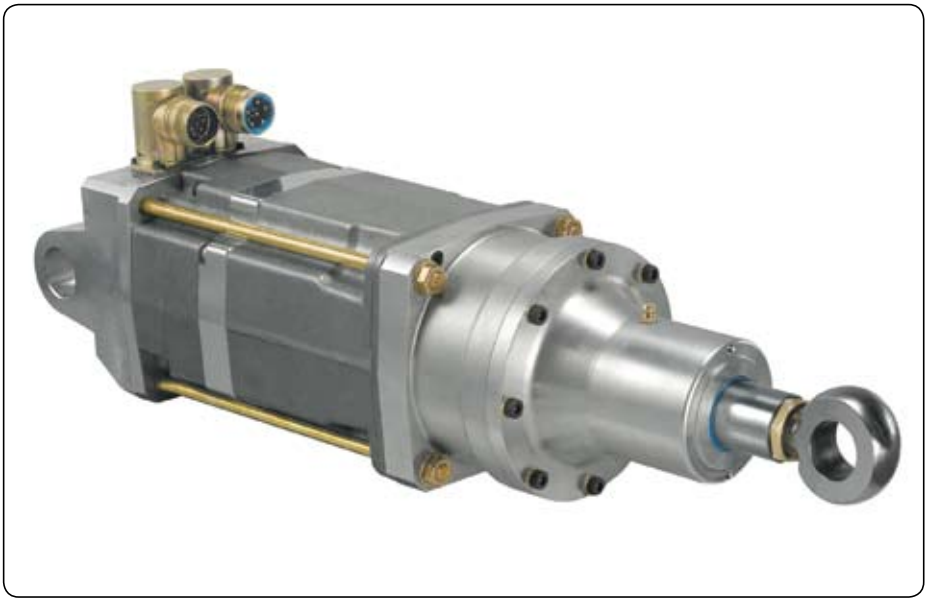

Complete systems for positioning

On special demand, SKF designs and manufactures complete systems, either from SKF standard components or special solutions that are exactly tailored to the respective application.

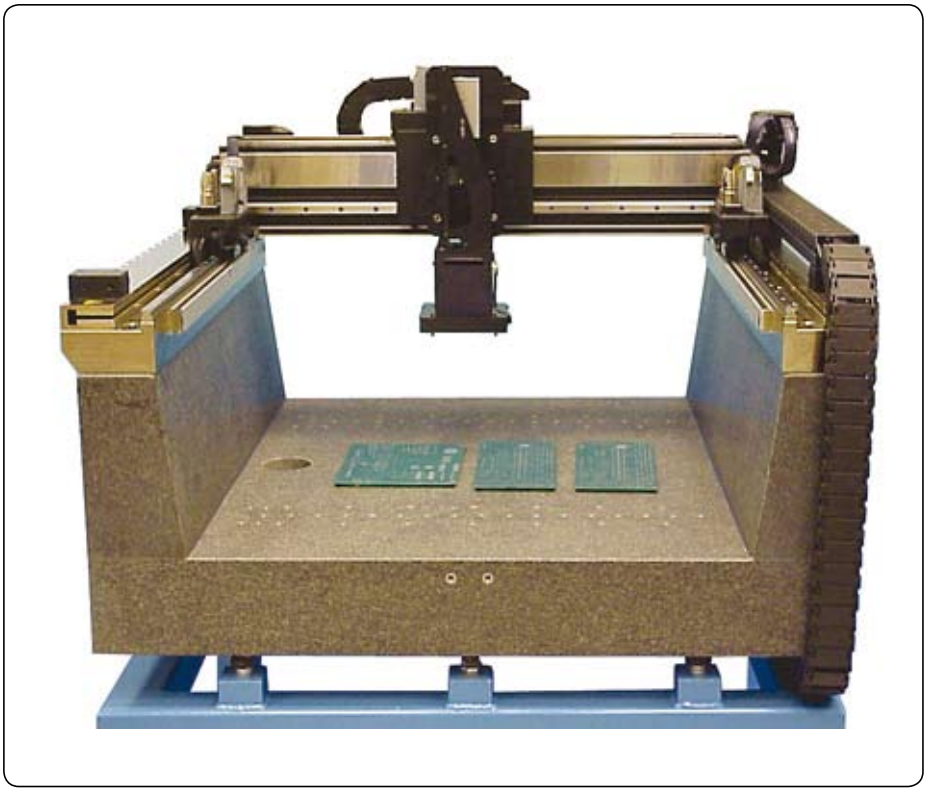

Linear motor tables

The compact cross tables with linear motor drive are high-precision positioning units, equipped with ironless linear motor and precision cross roller rail guides with patented Anti cage creeping System (ACS). They are available in aluminium and cast iron and are ideally suited for wafer processing and measurements applications. The electrical stroke is set with optical limit switches, integrated in the length measurement system.

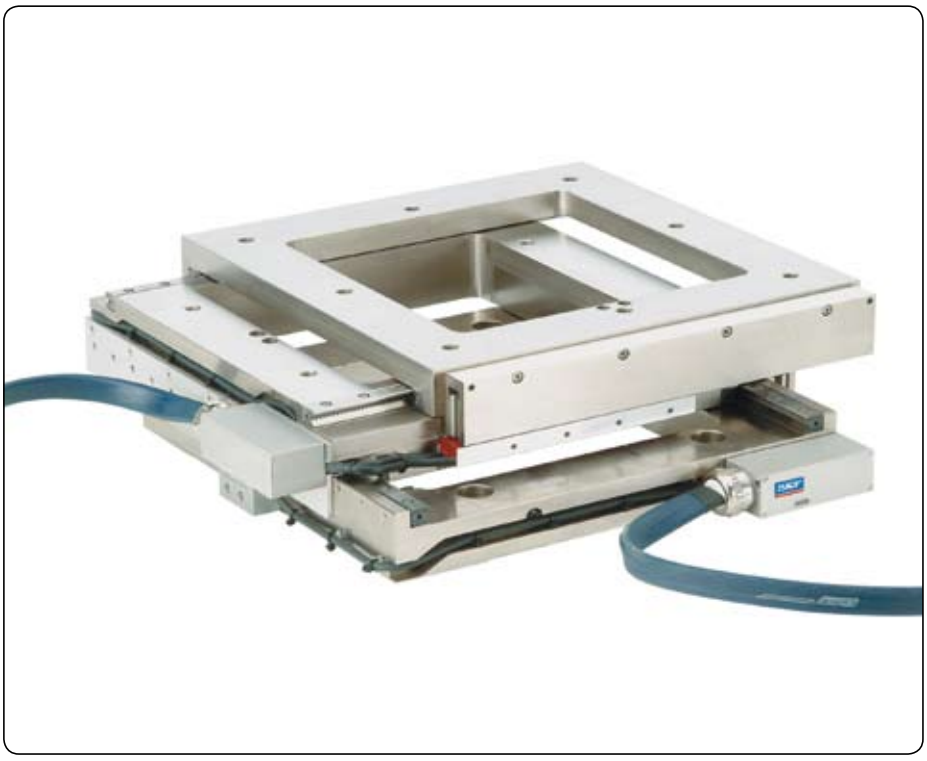

Notes

SKF – the knowledge engineering company

From the company that invented the self-aligning ball bearing more than 100 years ago, SKF has evolved into a knowledge engineering company that is able to draw on five technology platforms to create unique solutions for its customers. These platforms include bearings, bearing units and seals, of course, but extend to other areas including: lubricants and lubrication systems, critical for long bearing life in many applications; mechatronics that combine mechanical and electronics knowledge into systems for more effective linear motion and sensorized solutions; and a full range of services, from design and logistics support to conditioning monitoring and reliability systems.

Though the scope has broadened, SKF continues to maintain the world's leadership in the design, manufacture and marketing of rolling bearings, as well as complementary products such as radial seals. SKF also holds an increasingly important position in the market for linear motion products, high-precision aerospace bearings, machine tool spindles and plant maintenance services.

The SKF Group is globally certified to ISO 14001, the international standard for environmental management, as well as OHSAS 18001, the health and safety management standard. Individual divisions have been approved for quality certification in accordance with either ISO 9001 or ISO/TS 16949.

With some 100 manufacturing sites worldwide and sales companies in 70 countries, SKF is a truly international corporation. In addition, our distributors and dealers in some 15 000 locations around the world, an e-business marketplace and a global distribution system put SKF close to customers for the supply of both products and services. In essence, SKF solutions are available wherever and whenever customers need them. Overall, the SKF brand and the corporation are stronger than ever. As the knowledge engineering company, we stand ready to serve you with world-class product competencies, intellectual resources, and the vision to help you succeed.



© Airbus – photo: exm company, H. Goussé

Evolving by-wire technology
SKF has a unique expertise in fast-growing by-wire technology, from fly-by-wire, to drive-by-wire, to work-by-wire. SKF pioneered practical fly-by-wire technology and is a close working partner with all aerospace industry leaders. As an example, virtually all aircraft of the Airbus design use SKF by-wire systems for cockpit flight control.

SKF is also a leader in automotive by-wire technology, and has partnered with automotive engineers to develop two concept cars, which employ SKF mechatronics for steering and braking. Further by-wire development has led SKF to produce an all-electric forklift truck, which uses mechatronics rather than hydraulics for all controls.

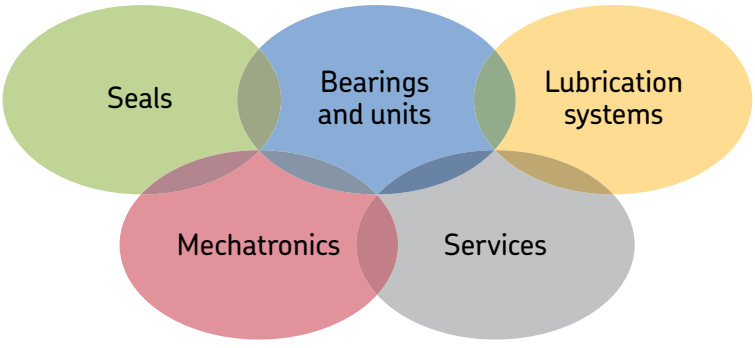





Harnessing wind power
The growing industry of wind-generated electric power provides a source of clean, green electricity. SKF is working closely with global industry leaders to develop efficient and trouble-free turbines, providing a wide range of large, highly specialized bearings and condition monitoring systems to extend equipment life of wind farms located in even the most remote and inhospitable environments.



Working in extreme environments
In frigid winters, especially in northern countries, extreme sub-zero temperatures can cause bearings in railway axleboxes to seize due to lubrication starvation. SKF created a new family of synthetic lubricants formulated to retain their lubrication viscosity even at these extreme temperatures. SKF knowledge enables manufacturers and end user customers to overcome the performance issues resulting from extreme temperatures, whether hot or cold. For example, SKF products are at work in diverse environments such as baking ovens and instant freezing in food processing plants.



Developing a cleaner cleaner
The electric motor and its bearings are the heart of many household appliances. SKF works closely with appliance manufacturers to improve their products' performance, cut costs, reduce weight, and reduce energy consumption. A recent example of this cooperation is a new generation of vacuum cleaners with substantially more suction. SKF knowledge in the area of small bearing technology is also applied to manufacturers of power tools and office equipment.



Maintaining a 350 km/h R&D lab
In addition to SKF's renowned research and development facilities in Europe and the United States, Formula One car racing provides a unique environment for SKF to push the limits of bearing technology. For over 50 years, SKF products, engineering and knowledge have helped make Scuderia Ferrari a formidable force in F1 racing. (The average racing Ferrari utilizes more than 150 SKF components.) Lessons learned here are applied to the products we provide to automakers and the aftermarket worldwide.



Delivering Asset Efficiency Optimization
Through SKF Reliability Systems, SKF provides a comprehensive range of asset efficiency products and services, from condition monitoring hardware and software to maintenance strategies, engineering assistance and machine reliability programmes. To optimize efficiency and boost productivity, some industrial facilities opt for an Integrated Maintenance Solution, in which SKF delivers all services under one fixed-fee, performance-based contract.



Planning for sustainable growth
By their very nature, bearings make a positive contribution to the natural en-vironment, enabling machinery to operate more efficiently, consume less power, and require less lubrication. By raising the performance bar for our own products, SKF is enabling a new generation of high-efficiency products and equipment. With an eye to the future and the world we will leave to our children, the SKF Group policy on environment, health and safety, as well as the manufacturing techniques, are planned and implemented to help protect and preserve the earth's limited natural resources. We remain committed to sustainable, environmentally responsible growth.

Notes

Notes

Notes

Notes

Notes

® SKF is a registered trademark of the SKF Group
Turcite-B is a registered trademark of Busak & Shamban GmbH

© SKF Group 2008
The contents of this publication are the copyright of thepublisher and may not be reproduced (even extracts) unless permission is granted. Every care has been taken to ensure the accuracy of the information contained in this publication but no liability can be accepted for any loss or damage whether direct, indirect or consequential arising out of the use of the information contained herein.

Publication **4664/6 EN** · July 2008

This publication supersedes publication 4664/5.

Printed in Italy on environmentally friendly paper.