

MRC®

# Marathon® series corrosion resistant mounted products and bearing units



# Contents


1 Introduction

6 End covers

8 Composite units

22 Stainless steel take-up frames

24 ZMaRC®-coated cast iron units

28 Cast stainless steel units

32 ZMaRC-coated insert bearings

33 Stainless steel insert bearings

34 Submersible plane bearing units

35 Hi-temp plane bearing units

36 Hi-temp ball bearing units

37 Made-To-Order products

38 Nomenclature

38 Tolerances and dimensional data

39 Stainless steel ball bearings

40 Assembly instructions


**Note:**
For an interchange of Marathon products, request publication number M660-712.

# Introduction to Marathon® series corrosion-resistant mounted products and bearing units

Few industries challenge bearings with a harsher operating environment than the food and beverage industries. Perhaps no industry works as hard to meet regulations governing contamination. When MRC® introduced the Marathon® series composite mounted bearing units, it was possibly the best solution to the problems associated with bearing failures.

Since then, in addition to the composite units, our $HD_i$—heavy-duty cast iron—and $XD_S$—extreme-duty cast stainless steel—have been introduced to more thoroughly meet the needs of the industry.

The $HD_i$ series combines corrosion resistance together with the strength of cast iron—without the problem of flaking nickel plating—and are priced competitively with nickel-plated versions. (See page 3 for details.)

For extremely challenging applications, the $XD_S$ series provides top-of-the-line corrosion resistance and the greatest housing strength available within the Marathon line. (See page 4 for details.)

At the heart of the Marathon units are high-quality, corrosion-resistant insert bearings, available with MRC's ZMaRC® coating or with stainless steel construction. The units' multifunction rubber seals are bonded to AISI 304 stainless steel for superior corrosion resistance, and sealed-for-life lubricants are USDA compliant.



# A composite housing with integrated performance features

The Marathon series' composite housing resists citric acids, cooking fats and most chemicals used in food and beverage processing. It is constructed of a thermoplastic composite material that can be up to 61% lighter than cast iron housings. Its spherical bore accommodates the insert bearing's spherical outer surface, enabling the unit to fully compensate for initial bearing seating misalignment.

Plus, the housing is loaded with design and performance advantages:

- Steel coils embedded in the housing contribute to the housing's fracture strength. Radial breaking load is far greater than the static load rating of the bearing. Marathon series housings have possibly the highest fracture strength of any composite unit available.
- A nylon-filled housing base enables the unit to meet flush with its mounting surface. Flush surface-to-surface mounting eliminates gaps—potential areas for contaminants to collect.
- 300 series stainless steel bolt hole inserts provide added strength to each housing foot and prevent corrosion.
- Marathon series units are available in the following housing designs to meet the needs of most food and beverage processing applications:
  - pillow block
  - two- or four-bolt flange
  - tapped base
  - three-bolt bracket flange
  - narrow and wide slot take-up
  - low backing height pillow block
  - low profile two- and three-bolt flange
  - four-bolt piloted flange
  - hanger





# ZMaRC® coated cast iron units

The Marathon HDj series is a corrosion-resistant, heavy-duty cast iron series of bearing units. The added strength and durability of the housings make them particularly well suited for applications in red meat, pork and poultry processing facilities where both housing strength and corrosion resistance are a concern.

The cast iron housings, protected with MRC's proven ZMaRC coating, eliminate the flaking problems associated with nickel-plated products, and are matched with our ZMaRC-plated, lubed-for-life, quality insert bearings.

The HDj series provides a number of cost-saving and performance benefits. As with all Marathon products, MRC's patented two-part stainless steel seals allow the units to operate in heavy washdown environments without regreasing. And since there is no need for relubrication, continuous grease purge is never a problem.

Advantages of the HDj series:

- Complete ZMaRC coating on all housing surfaces for long-term corrosion resistance.
- No relubrication, even in a washdown environment
- Open spaces on bases and backs of housings are filled with polyurethane, eliminating areas where moisture and product can collect, for a more sanitary housing design.
- Lubed-for-life with USDA compliant H1 grease.
- Two-part sealing for maximum protection

Like all Marathon bearing units, Marathon HDj units contain an AISI 304 stainless steel inner seal and outer seal. These components work in tandem to form an extremely effective sealing system. (See page 5 for more details.)

The HDj series is available in the following housing designs:

– pillow block
– two- or four-bolt flange
– tapped base



# Marathon $XD_S$ unit—MRC's top-of-the-line units

Extremely challenging applications require an extremely durable unit—the $XD_S$ units. These housings are AISI 300 series cast stainless steel with MRC's proven stainless steel insert bearings.

The extra strength and toughness of the cast stainless housings are beneficial where loads are very heavy or where shock loads are possible. Also, the safety factor inherent in the cast steel housing is desirable in applications where housing failure could result in injury.

While composite and plated housings are resistant to most of the chemicals in use today, these stainless units are not affected by the strong concentrations of chlorine, hydrogen peroxide and other chemicals sometimes used in washdown procedures

The $XD_S$ cast stainless housings were designed especially for use in food and beverage applications. The bases have no recesses to trap debris and bacteria; the exposed surfaces of the housings have no unnecessary crevices or pockets; and the smooth finish minimizes material trapped on the surface allowing a more thorough cleaning.

Like the other members of the Marathon family, the $XD_S$ series incorporates the proven insert bearing design and patented sealing arrangement (see page 5), and are also greased for life and maintenance free.

Housing styles available include:
- pillow block
- two- and four-bolt flange
- tapped base

## MRC $XD_S$ extreme duty machined stainless steel mounted units

MRC can also offer additional housing styles in machined stainless steel. Made of AISI 300 series stainless steel, these units are machined from solid stainless steel plate rather than cast. These are especially suited for applications where surface roughness is critical, such as instances where chronic bacterial problems have existed. As with the cast housings, there are no unnecessary recesses or cavities to trap debris.

And like the cast stainless units, MRC's excellent stainless steel insert bearings are used.



# Insert bearings

The Marathon units' high quality insert bearings are available with MRC's proprietary ZMaRC coating on the inner and outer rings. ZMaRC resists frequent washdowns with water and with acidic and caustic solutions far better than conventional insert bearings and conventional coatings, such as black oxide. That means greater protection against rust, greater protection against contaminant-related bearing failure and greater assurance that your equipment will pass USDA inspections.

If you prefer stainless steel, MRC will supply the Marathon series with AISI 420C stainless inner and outer rings and balls. The insert bearing's stainless steel set-screws, positioned 120 degrees apart, minimize inner ring distortion while maintaining good gripping strength.



ZMaRC-coated insert bearing



Stainless steel insert bearing

## Marathon composite units with ZMaRC-coated bearing inserts are also available from stock with eccentric locking collar mounting.

Eccentric locking collars provide a nearly 360-degree shaft contact for reduced slippage and improved mounting integrity. The eccentric locking collar mounting is primarily intended for use in applications where the direction of rotation is constant. This alternative to setscrew mounting also makes bearing removal easier by providing access to the setscrew dimple created on the shaft surface during the initial mounting procedure. The mechanic is then able to file down the raised edges around the dimple in order to easily slide the bearing off the shaft.

Other Marathon style units with ZMaRC inserts can be ordered with the eccentric locking collar through our Made-to-Order program.



ZMaRC-coated insert bearing with eccentric locking collar

## Stainless steel sealing arrangement



A double-protection seal keeps the Marathon units running contaminant free. The sealing arrangement consists of a double-lip, AISI 304 stainless steel integral seal, an AISI 304 stainless steel flinger and a rubber-backed seal gasket. The flinger and seal's low-friction rubber lips, with optimized axial contact, form a double barrier against pollutants and washdowns. The seal gasket prevents contaminants from migrating around the seal insert's O.D., and the flinger adds mechanical and centrifugal protection against contaminant entry. The space between the insert seal and flinger is filled with USDA food-grade grease for even greater sealing efficiency.

## USDA-compliant grease

Marathon units are prelubricated-for-life with USDA H1-compliant grease. The high quality synthetic grease is odorless and tasteless, and is approved for use in all food processing industries.

Other Marathon mounted bearing unit grease benefits:

- Excellent internal and external bearing corrosion protection.
- High aging resistance for extended lubricant life.
- High load carrying capacity, which helps prevent premature bearing wear.

# End covers

## Secure fit, operator safety

If needed to comply with health and safety regulations, composite and stainless steel MRC Marathon units can be supplied with effective end covers.

ECWM (→ **fig. 1**) is for composite and stainless steel MRC Marathon units. It has an optional drainage hole that can be easily opened by the user as required.

ECWM end covers are tested to withstand 100 bar pressure wash and will not dislocate during washing.

End covers are not included with the bearing units and must be ordered separately.






NOTE: drainhole faces down when in use

**Fig. 1**

**ECWM cover**

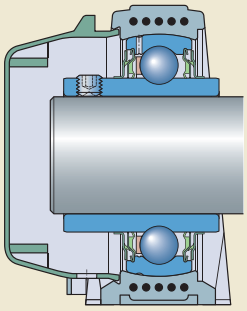

## End covers

The table below shows the appropriate end cover for each bearing unit, and the distance (A5) that the end cover protrudes from the housing side (→ **fig 2**). Prior to starting the mounting procedure, make sure to use the correct end cover and check if the A5 dimension is suitable for your application arrangement.

NOTE: the end cover must be ordered separately.

**Fig. 2**

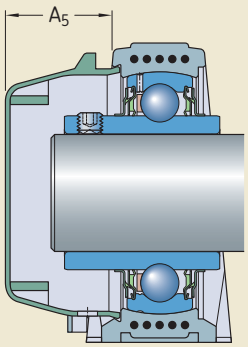


## Mounting instructions for end covers

**1** Remove the end cover from its package.
**2** Identify the housing end cover groove and make sure it is clean and free of any debris.
**3** Hold the cover askew against the housing and insert the cover tabs into the housing groove.
**4** Push the cover towards the housing until all the tabs snap into the housing groove. Where needed, help the tabs into position by bending the cover edge slightly as required.
**5** Make sure the cover is securely in place. If needed, remove the end cap and start the process again from **step 3**.

## Dismounting instructions for end covers

**1** Insert a screwdriver or a pointed tool into the space between the housing and the dismounting protrusion located in the cover side.
**2** Unlock the cover by levering it until the first end cover tabs come out from the housing groove, then complete the unlocking process by hand.

**End cover selection chart**

| ECWM covers fit these housing styles: | | C2F S2F | C4F S4F | CPB SPB | CTB STB |
|---|---|---|---|---|---|
| Shaft diameter in. | mm | Appropriate designation | | Cover A5 dimension (→fig 2) in. / mm | |
| 3/4 | 20 | ECWM 204 | | 1.0 / 26 | |
| 1 | 25 | ECWM 205 | | 1.0 / 26 | |
| 1 1/8 | 30 | ECWM 206 | | 1.2 / 31 | |
| 1 3/16 | | ECWM 206 | | 1.2 / 31 | |
| 1 1/4 (R) | | ECWM 206 | | 1.2 / 31 | |
| 1 1/4 | 35 | ECWM 207 | | 1.3 / 33 | |
| 1 3/8 | | ECWM 207 | | 1.3 / 33 | |
| 1 7/16 | | ECWM 207 | | 1.3 / 33 | |
| 1 1/2 | 40 | ECWM 208 | | 1.3 / 34 | |

NOTE: CBF, CTN, and CTW housing series do not have end cover grooves and are therefore not available with end covers.

## CPB composite pillow block units

ZMaRC-coated insert bearing
Available with standard set-screw mounting or
eccentric locking collar mounting

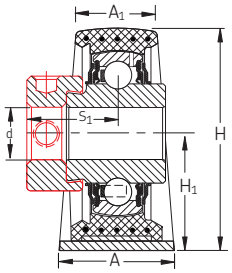


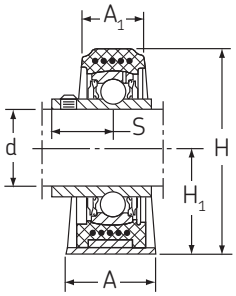


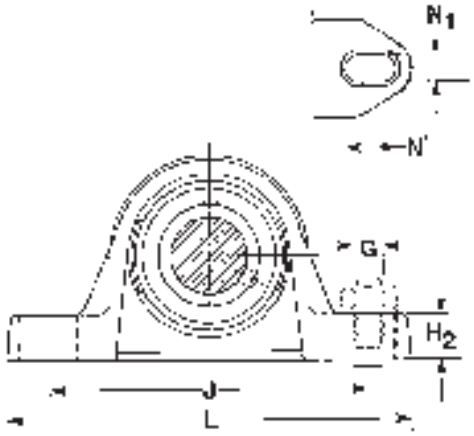


### For inch shafts $^{3}/_{4}$ – $1^{15}/_{16}$

| Shaft dia d | Pillow block designation | A | $A_1$ | H | $H_1$ | $H_2$ | J Min | J Max | L | N | $N_1$ | G | S | $S_1$ | Mass double set-screw | Mass lock-collar | Basic radial load rating dynamic C† | Basic radial load rating static $C_0$† |
|---|---|---|---|---|---|---|---|---|---|---|---|---|---|---|---|---|---|---|
| in | | in<br>mm | in<br>mm | in<br>mm | in<br>mm | in<br>mm | in<br>mm | in<br>mm | in<br>mm | in<br>mm | in<br>mm | in<br>mm | in<br>mm | in<br>mm | lb<br>kg | lb<br>kg | lbf<br>N | lbf<br>N |
| $^{3}/_{4}$ | CPB012ZM | $1^{1}/_{4}$<br>32 | $^{53}/_{64}$<br>21 | $2^{1}/_{2}$<br>64 | $1^{5}/_{16}$<br>33.3 | $^{5}/_{8}$<br>16 | $3^{19}/_{32}$<br>91.5 | 4<br>101.5 | $4^{31}/_{32}$<br>126 | $^{21}/_{32}$<br>17 | $^{29}/_{64}$<br>11.5 | $^{3}/_{8}$<br>10 | $^{23}/_{32}$<br>18.3 | | 0.53<br>0.24 | | 2 860<br>12 700 | 1 470<br>6 5505 |
| $^{15}/_{16}$ | CPB015ZM | $1^{1}/_{4}$<br>32 | $^{7}/_{8}$<br>22 | $2^{25}/_{32}$<br>70.5 | $1^{7}/_{16}$<br>36.5 | $^{5}/_{8}$<br>16 | $3^{29}/_{32}$<br>99.5 | $4^{11}/_{32}$<br>110.5 | $5^{9}/_{32}$<br>134 | $^{21}/_{32}$<br>17 | $^{29}/_{64}$<br>11.5 | $^{3}/_{8}$<br>10 | $^{25}/_{32}$<br>19.8 | | 0.65<br>0.29 | | 3 150<br>14 000 | 1 750<br>7 800 |
| 1 | CPB100ZM-L* | $1^{1}/_{4}$<br>32 | $^{7}/_{8}$<br>22 | $2^{25}/_{32}$<br>70.5 | $1^{7}/_{16}$<br>36.5 | $^{5}/_{8}$<br>16 | $3^{29}/_{32}$<br>99.5 | $4^{11}/_{32}$<br>110.5 | $5^{9}/_{32}$<br>134 | $^{21}/_{32}$<br>17 | $^{29}/_{64}$<br>11.5 | $^{3}/_{8}$<br>10 | $^{25}/_{32}$<br>19.8 | $1^{1}/_{16}$<br>27.0 | 0.62<br>0.28 | 0.74<br>0.33 | 3 150<br>14 000 | 1 750<br>7 800 |
| $1^{1}/_{8}$ | CPB102ZM | $1^{37}/_{64}$<br>40 | $^{63}/_{64}$<br>25 | $3^{15}/_{64}$<br>82 | $1^{11}/_{16}$<br>42.9 | $^{3}/_{4}$<br>19 | $4^{1}/_{4}$<br>108 | $^{53}/_{64}$<br>128 | $6^{1}/_{4}$<br>159 | $5^{3}/_{64}$<br>21 | $^{35}/_{64}$<br>14 | $^{1}/_{2}$<br>12 | $^{7}/_{8}$<br>22.2 | | 1.10<br>0.50 | | 4 380<br>19 500 | 2 520<br>11 200 |
| $1^{3}/_{16}$ | CPB103ZM-L* | $1^{37}/_{64}$<br>40 | $^{63}/_{64}$<br>25 | $3^{15}/_{64}$<br>82 | $1^{11}/_{16}$<br>42.9 | $^{3}/_{4}$<br>19 | $4^{1}/_{4}$<br>108 | $^{53}/_{64}$<br>128 | $6^{1}/_{4}$<br>159 | $5^{3}/_{64}$<br>21 | $^{35}/_{64}$<br>14 | $^{1}/_{2}$<br>12 | $^{7}/_{8}$<br>22.2 | $1^{3}/_{16}$<br>30.2 | 1.04<br>0.47 | 1.23<br>0.56 | 4 380<br>19 500 | 2 520<br>11 200 |
| $1^{1}/_{4}$ | CPB104ZMR | $1^{37}/_{64}$<br>40 | $^{63}/_{64}$<br>25 | $3^{15}/_{64}$<br>82 | $1^{11}/_{16}$<br>42.9 | $^{3}/_{4}$<br>19 | $4^{1}/_{4}$<br>108 | $^{53}/_{64}$<br>128 | $6^{1}/_{4}$<br>159 | $^{53}/_{64}$<br>21 | $^{35}/_{64}$<br>14 | $^{1}/_{2}$<br>12 | $^{7}/_{8}$<br>22.2 | | 1.01<br>0.46 | | 4 380<br>19 500 | 2 520<br>11 20 |
| $1^{1}/_{4}$ | CPB104ZM-L* | $1^{49}/_{64}$<br>45 | $1^{1}/_{16}$<br>27 | $3^{21}/_{32}$<br>93 | $1^{7}/_{8}$<br>47.6 | $^{3}/_{4}$<br>19 | $4^{11}/_{16}$<br>119 | $5^{1}/_{4}$<br>133 | $6^{15}/_{32}$<br>164 | $^{53}/_{64}$<br>21 | $^{35}/_{64}$<br>14 | $^{1}/_{2}$<br>12 | 1<br>25.4 | $1^{9}/_{32}$<br>32.5 | 1.57<br>0.71 | 1.94<br>0.87 | 5 730<br>25 500 | 3 440<br>15 300 |
| $1^{7}/_{16}$ | CPB107ZM-L* | $1^{49}/_{64}$<br>45 | $1^{1}/_{16}$<br>27 | $3^{21}/_{32}$<br>93 | $1^{7}/_{8}$<br>47.6 | $^{3}/_{4}$<br>19 | $4^{11}/_{16}$<br>119 | $5^{1}/_{4}$<br>133 | $6^{15}/_{32}$<br>164 | $^{53}/_{64}$<br>21 | $^{35}/_{64}$<br>14 | $^{1}/_{2}$<br>12 | 1<br>25.4 | $1^{9}/_{32}$<br>32.5 | 1.37<br>0.62 | 1.68<br>0.76 | 5 730<br>25 500 | 3 440<br>15 300 |
| $1^{1}/_{2}$ | CPB108ZM | $1^{57}/_{64}$<br>48 | $1^{3}/_{16}$<br>30 | $3^{29}/_{32}$<br>99 | $1^{15}/_{16}$<br>49.2 | $^{25}/_{32}$<br>20 | $5^{5}/_{64}$<br>129 | $5^{5}/_{8}$<br>143 | $6^{57}/_{64}$<br>175 | $^{53}/_{64}$<br>21 | $^{35}/_{64}$<br>14 | $^{1}/_{2}$<br>12 | $1^{3}/_{16}$<br>30 | | 1.98<br>0.90 | | 6 900<br>30 700 | 4 270<br>19 000 |
| $1^{15}/_{16}$ | CPB115ZM-L*[1 2] | $2^{1}/_{4}$<br>57.2 | $2^{1}/_{4}$<br>57.2 | $4^{5}/_{8}$<br>117.5 | $2^{1}/_{4}$<br>57.2 | $^{3}/_{4}$<br>19.1 | $5^{7}/_{8}$<br>149.2 | $6^{3}/_{4}$<br>171.5 | $8^{1}/_{8}$<br>206.4 | $1^{1}/_{16}$<br>27 | $^{21}/_{32}$<br>16.7 | $^{5}/_{8}$<br>16 | $1^{9}/_{32}$<br>32.6 | $1^{1}/_{2}$<br>38.1 | 2.95<br>1.34 | 3.43<br>1.55 | 7 890<br>35 100 | 5 220<br>23 200 |

*L suffix indicates eccentric locking collar

### For metric shafts 20mm - 40mm

| Shaft dia d | Pillow block designation | A | $A_1$ | H | $H_1$ | $H_2$ | J Min | J Max | L | N | $N_1$ | G | $S_1$ | Mass | Basic radial load rating dynamic C† | Basic radial load rating static $C_0$† |
|---|---|---|---|---|---|---|---|---|---|---|---|---|---|---|---|---|
| mm | | in<br>mm | in<br>mm | in<br>mm | in<br>mm | in<br>mm | in<br>mm | in<br>mm | in<br>mm | in<br>mm | in<br>mm | in<br>mm | in<br>mm | lb<br>kg | lbf<br>N | lbf<br>N |
| 20 | CPB20ZM | $1^{1}/_{4}$<br>32 | $^{53}/_{64}$<br>21 | $2^{1}/_{2}$<br>64 | $1^{5}/_{16}$<br>33.3 | $^{5}/_{8}$<br>16 | $3^{19}/_{32}$<br>91.5 | 4<br>101.5 | $4^{31}/_{32}$<br>126 | $^{21}/_{32}$<br>17 | $^{29}/_{64}$<br>11.5 | $^{3}/_{8}$<br>10 | $^{23}/_{32}$<br>18.3 | 0.53<br>0.24 | 2 860<br>12 700 | 1 470<br>6 5505 |
| 25 | CPB25ZM | $1^{1}/_{4}$<br>32 | $^{7}/_{8}$<br>22 | $2^{25}/_{32}$<br>70.5 | $1^{7}/_{16}$<br>36.5 | $^{5}/_{8}$<br>16 | $3^{29}/_{32}$<br>99.5 | $4^{11}/_{32}$<br>110.5 | $5^{9}/_{32}$<br>134 | $^{21}/_{32}$<br>17 | $^{29}/_{64}$<br>11.5 | $^{3}/_{8}$<br>10 | $^{25}/_{32}$<br>19.8 | 0.64<br>0.29 | 3 150<br>14 000 | 1 750<br>7 800 |
| 30 | CPB30ZM | $1^{37}/_{64}$<br>40 | $^{63}/_{64}$<br>25 | $3^{15}/_{64}$<br>82 | $1^{11}/_{16}$<br>42.9 | $^{3}/_{4}$<br>19 | $4^{1}/_{4}$<br>108 | $^{53}/_{64}$<br>128 | $6^{1}/_{4}$<br>159 | $5^{3}/_{64}$<br>21 | $^{35}/_{64}$<br>14 | $^{1}/_{2}$<br>12 | $^{7}/_{8}$<br>22.2 | 1.08<br>0.49 | 4 380<br>19 500 | 2 520<br>11 200 |
| 35 | CPB35ZM | $1^{49}/_{64}$<br>45 | $1^{1}/_{16}$<br>27 | $3^{21}/_{32}$<br>93 | $1^{7}/_{8}$<br>47.6 | $^{3}/_{4}$<br>19 | $4^{11}/_{16}$<br>119 | $5^{1}/_{4}$<br>133 | $6^{15}/_{32}$<br>164 | $^{53}/_{64}$<br>21 | $^{35}/_{64}$<br>14 | $^{1}/_{2}$<br>12 | 1<br>25.4 | 1.46<br>0.66 | 5 730<br>25 500 | 3 440<br>15 300 |
| 40 | CPB40ZM | $1^{57}/_{64}$<br>48 | $1^{3}/_{16}$<br>30 | $3^{29}/_{32}$<br>99 | $1^{15}/_{16}$<br>49.2 | $^{25}/_{32}$<br>20 | $5^{5}/_{64}$<br>129 | $5^{5}/_{8}$<br>143 | $6^{57}/_{64}$<br>175 | $^{53}/_{64}$<br>21 | $^{35}/_{64}$<br>14 | $^{1}/_{2}$<br>12 | $1^{3}/_{16}$<br>30 | 1.90<br>0.86 | 6 900<br>30 700 | 4 270<br>19 000 |



MRC Marathon series composite mounted bearing units are greased and sealed for life. MRC does not recommend regreasing.
If required, units with relubrication fittings are available for your application. Adding a "G" suffix to the part number denotes a regreasable unit.
[1] Cast polymer housing. No steel coils.
[2] Check with MRC for availability.
† Capacities listed are for the insert bearing only and do not reflect the capacity of the housing. If the application loads exceed 80% of the static capacity (Co), MRC Applications Engineering should be consulted for a design review.

## CPB composite pillow block units
Stainless steel insert bearing

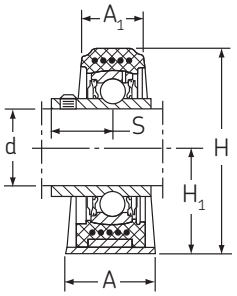


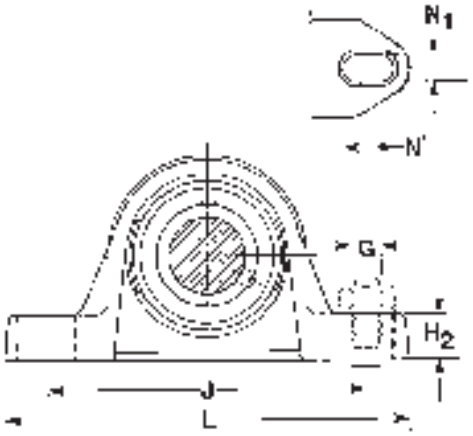


### For inch shafts $^{3}/_{4}$ – $1^{1}/_{2}$

| Shaft dia d | Pillow block designation | A | $A_1$ | H | $H_1$ | $H_2$ | J Min | J Max | L | N | $N_1$ | G | $S_1$ | Mass | Basic radial load rating dynamic C† | static $C_0$† |
|---|---|---|---|---|---|---|---|---|---|---|---|---|---|---|---|---|
| in | | in mm | in mm | in mm | in mm | in mm | in mm | in mm | in mm | in mm | in mm | in mm | in mm | lb kg | lbf N | lbf N |
| $^{3}/_{4}$ | CPB012SS | $1^{1}/_{4}$ 32 | $^{53}/_{64}$ 21 | $2^{1}/_{2}$ 64 | $1^{5}/_{16}$ 33.3 | $^{5}/_{8}$ 16 | $3^{19}/_{32}$ 91.5 | 4 101.5 | $4^{31}/_{32}$ 126 | $^{21}/_{32}$ 17 | $^{29}/_{64}$ 11.5 | $^{3}/_{8}$ 10 | $^{23}/_{32}$ 18.3 | 0.53 0.24 | 2 430 10 800 | 1 470 6 550 |
| 1 | CPB100SS | $1^{1}/_{4}$ 32 | $^{7}/_{8}$ 22 | $2^{25}/_{32}$ 70.5 | $1^{7}/_{16}$ 36.5 | $^{5}/_{8}$ 16 | $3^{29}/_{32}$ 99.5 | $4^{11}/_{32}$ 110.5 | $5^{9}/_{32}$ 134 | $^{21}/_{32}$ 17 | $^{29}/_{64}$ 11.5 | $^{3}/_{8}$ 10 | $^{25}/_{32}$ 19.8 | 0.62 0.28 | 2 670 11 900 | 1 750 7 800 |
| $1^{3}/_{16}$ | CPB103SS | $1^{37}/_{64}$ 40 | $^{63}/_{64}$ 25 | $3^{15}/_{64}$ 82 | $1^{11}/_{16}$ 42.9 | $^{3}/_{4}$ 19 | $4^{1}/_{4}$ 108 | $^{53}/_{64}$ 128 | $6^{1}/_{4}$ 159 | $5^{3}/_{64}$ 21 | $^{35}/_{64}$ 14 | $^{1}/_{2}$ 12 | $^{7}/_{8}$ 22.2 | 1.04 0.47 | 3 660 16 300 | 2 520 11 200 |
| $1^{1}/_{4}$ | CPB104SSR | $1^{37}/_{64}$ 40 | $^{63}/_{64}$ 25 | $3^{15}/_{64}$ 82 | $1^{11}/_{16}$ 42.9 | $^{3}/_{4}$ 19 | $4^{1}/_{4}$ 108 | $^{53}/_{64}$ 128 | $6^{1}/_{4}$ 159 | $5^{3}/_{64}$ 21 | $^{35}/_{64}$ 14 | $^{1}/_{2}$ 12 | $^{7}/_{8}$ 22.2 | 1.04 0.47 | 3 660 16 300 | 2 520 11 200 |
| $1^{1}/_{4}$ | CPB104SS | $1^{49}/_{64}$ 45 | $1^{1}/_{16}$ 27 | $3^{21}/_{32}$ 93 | $1^{7}/_{8}$ 47.6 | $^{3}/_{4}$ 19 | $4^{11}/_{16}$ 119 | $5^{1}/_{4}$ 133 | $6^{15}/_{32}$ 164 | $^{53}/_{64}$ 21 | $^{35}/_{64}$ 14 | $^{1}/_{2}$ 12 | 1 25.4 | 1.57 0.71 | 4 850 21 600 | 3 440 15 300 |
| $1^{3}/_{8}$ | CPB106SS | $1^{49}/_{64}$ 45 | $1^{1}/_{16}$ 27 | $3^{21}/_{32}$ 93 | $1^{7}/_{8}$ 47.6 | $^{3}/_{4}$ 19 | $4^{11}/_{16}$ 119 | $5^{1}/_{4}$ 133 | $6^{15}/_{32}$ 164 | $^{53}/_{64}$ 21 | $^{35}/_{64}$ 14 | $^{1}/_{2}$ 12 | 1 25.4 | 1.44 0.65 | 4 850 21 600 | 3 440 15 300 |
| $1^{7}/_{16}$ | CPB107SS | $1^{49}/_{64}$ 45 | $1^{1}/_{16}$ 27 | $3^{21}/_{32}$ 93 | $1^{7}/_{8}$ 47.6 | $^{3}/_{4}$ 19 | $4^{11}/_{16}$ 119 | $5^{1}/_{4}$ 133 | $6^{15}/_{32}$ 164 | $^{53}/_{64}$ 21 | $^{35}/_{64}$ 14 | $^{1}/_{2}$ 12 | 1 25.4 | 1.37 0.62 | 4 850 21 600 | 3 440 15 300 |
| $1^{1}/_{2}$ | CPB108SS | $1^{57}/_{64}$ 48 | $1^{3}/_{16}$ 30 | $3^{29}/_{32}$ 99 | $1^{15}/_{16}$ 49.2 | $^{25}/_{32}$ 20 | $5^{5}/_{64}$ 129 | $5^{5}/_{8}$ 143 | $6^{57}/_{64}$ 175 | $^{53}/_{64}$ 21 | $^{35}/_{64}$ 14 | $^{1}/_{2}$ 12 | $1^{3}/_{16}$ 30 | 1.98 0.90 | 5 550 24 700 | 4 270 19 000 |

### For metric shafts 20mm - 40mm

| Shaft dia d | Pillow block designation | A | $A_1$ | H | $H_1$ | $H_2$ | J Min | J Max | L | N | $N_1$ | G | $S_1$ | Mass | Basic radial load rating dynamic C† | static $C_0$† |
|---|---|---|---|---|---|---|---|---|---|---|---|---|---|---|---|---|
| mm | | in mm | in mm | in mm | in mm | in mm | in mm | in mm | in mm | in mm | in mm | in mm | in mm | lb kg | lbf N | lbf N |
| 20 | CPB20SS | $1^{1}/_{4}$ 32 | $^{53}/_{64}$ 21 | $2^{1}/_{2}$ 64 | $1^{5}/_{16}$ 33.3 | $^{5}/_{8}$ 16 | $3^{19}/_{32}$ 91.5 | 4 101.5 | $4^{31}/_{32}$ 126 | $^{21}/_{32}$ 17 | $^{29}/_{64}$ 11.5 | $^{3}/_{8}$ 10 | $^{23}/_{32}$ 18.3 | 0.53 0.24 | 2 430 10 800 | 1 470 6 5505 |
| 25 | CPB25SS | $1^{1}/_{4}$ 32 | $^{7}/_{8}$ 22 | $2^{25}/_{32}$ 70.5 | $1^{7}/_{16}$ 36.5 | $^{5}/_{8}$ 16 | $3^{29}/_{32}$ 99.5 | $4^{11}/_{32}$ 110.5 | $5^{9}/_{32}$ 134 | $^{21}/_{32}$ 17 | $^{29}/_{64}$ 11.5 | $^{3}/_{8}$ 10 | $^{25}/_{32}$ 19.8 | 0.64 0.29 | 2 670 11 900 | 1 750 7 800 |
| 30 | CPB30SS | $1^{37}/_{64}$ 40 | $^{63}/_{64}$ 25 | $3^{15}/_{64}$ 82 | $1^{11}/_{16}$ 42.9 | $^{3}/_{4}$ 19 | $4^{1}/_{4}$ 108 | $^{53}/_{64}$ 128 | $6^{1}/_{4}$ 159 | $5^{3}/_{64}$ 21 | $^{35}/_{64}$ 14 | $^{1}/_{2}$ 12 | $^{7}/_{8}$ 22.2 | 1.08 0.49 | 3 660 16 300 | 2 520 11 200 |
| 35 | CPB35SS | $1^{49}/_{64}$ 45 | $1^{1}/_{16}$ 27 | $3^{21}/_{32}$ 93 | $1^{7}/_{8}$ 47.6 | $^{3}/_{4}$ 19 | $4^{11}/_{16}$ 119 | $5^{1}/_{4}$ 133 | $6^{15}/_{32}$ 164 | $^{53}/_{64}$ 21 | $^{35}/_{64}$ 14 | $^{1}/_{2}$ 12 | 1 25.4 | 1.46 0.66 | 4 850 21 600 | 3 440 15 300 |
| 40 | CPB40SS | $1^{57}/_{64}$ 48 | $1^{3}/_{16}$ 30 | $3^{29}/_{32}$ 99 | $1^{15}/_{16}$ 49.2 | $^{25}/_{32}$ 20 | $5^{5}/_{64}$ 129 | $5^{5}/_{8}$ 143 | $6^{57}/_{64}$ 175 | $^{53}/_{64}$ 21 | $^{35}/_{64}$ 14 | $^{1}/_{2}$ 12 | $1^{3}/_{16}$ 30 | 1.90 0.86 | 5 550 24 700 | 4 270 19 000 |



MRC Marathon series composite mounted bearing units are greased and sealed for life. MRC does not recommend regreasing.
If required, units with relubrication fittings are available for your application. Adding a "G" suffix to the part number denotes a regreasable unit.
† Capacities listed are for the insert bearing only and do not reflect the capacity of the housing. If the application loads exceed 80% of the static capacity (Co), MRC Applications Engineering should be consulted for a design review.

## C2F composite two-bolt flange units

ZMaRC-coated insert bearing
Available with standard set-screw mounting or
eccentric locking collar mounting

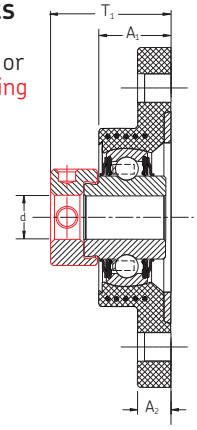


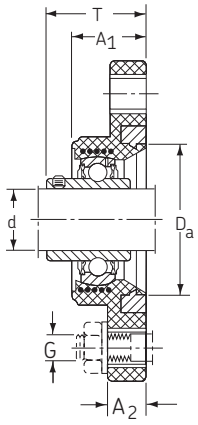


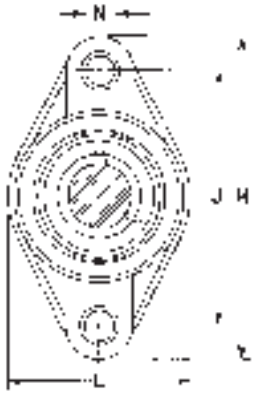


### For inch shafts $^{3}/_{4}$ – $1^{15}/_{16}$

| Shaft dia d | Flange unit designation | $A_1$ | $A_2$ | $D_a$ | H | J | L | N | G | T | $T_1$ | Mass double set-screw | Mass lock-collar | Basic radial load rating dynamic C† | Basic radial load rating static $C_0$† |
|---|---|---|---|---|---|---|---|---|---|---|---|---|---|---|---|
| in | | in<br>mm | in<br>mm | in<br>mm | in<br>mm | in<br>mm | in<br>mm | in<br>mm | in<br>mm | in<br>mm | in<br>mm | lb<br>kg | lb<br>kg | lbf<br>N | lbf<br>N |
| $^{3}/_{4}$ | C2F012ZM | $1^{5}/_{32}$<br>29.5 | $^{19}/_{32}$<br>15 | 2<br>50.8 | $4^{13}/_{32}$<br>112 | $3^{17}/_{32}$<br>90 | $2^{3}/_{8}$<br>60.5 | $^{29}/_{64}$<br>11.5 | $^{3}/_{8}$<br>10 | $1^{15}/_{32}$<br>37.3 | | 0.53<br>0.24 | | 2 860<br>12 700 | 1 470<br>6 550 |
| $^{15}/_{16}$ | C2F015ZM | $1^{3}/_{16}$<br>30 | $^{19}/_{32}$<br>15 | $2^{1}/_{2}$<br>63.5 | $4^{7}/_{8}$<br>124 | $3^{29}/_{32}$<br>99 | $2^{3}/_{4}$<br>70 | $^{29}/_{64}$<br>11.5 | $^{3}/_{8}$<br>10 | $1^{17}/_{32}$<br>38.8 | | 0.67<br>0.30 | | 3 150<br>14 000 | 1 750<br>7 800 |
| 1 | C2F100ZM-L* | $1^{3}/_{16}$<br>30 | $^{19}/_{32}$<br>15 | $2^{1}/_{2}$<br>63.5 | $4^{7}/_{8}$<br>124 | $3^{29}/_{32}$<br>99 | $2^{3}/_{4}$<br>70 | $^{29}/_{64}$<br>11.5 | $^{3}/_{8}$<br>10 | $1^{17}/_{32}$<br>38.8 | $1^{13}/_{16}$<br>46 | 0.62<br>0.28 | 0.74<br>0.33 | 3 150<br>14 000 | 1 750<br>7 800 |
| $1^{1}/_{8}$ | C2F102ZM | $1^{9}/_{32}$<br>33 | $^{19}/_{32}$<br>15 | 3<br>76.2 | $5^{39}/_{64}$<br>142.5 | $4^{19}/_{32}$<br>116.5 | $3^{17}/_{64}$<br>83 | $^{29}/_{64}$<br>11.5 | $^{3}/_{8}$<br>10 | $1^{21}/_{32}$<br>42.2 | | 0.99<br>0.45 | | 4 380<br>19 500 | 2 520<br>11 200 |
| $1^{3}/_{16}$ | C2F103ZM-L* | $1/_{32}$<br>33 | $^{19}/_{32}$<br>15 | 3<br>76.2 | $5^{39}/_{64}$<br>142.5 | $4^{19}/_{32}$<br>116.5 | $3^{17}/_{64}$<br>83 | $^{29}/_{64}$<br>11.5 | $^{3}/_{8}$<br>10 | $1^{21}/_{32}$<br>42.2 | $1^{31}/_{32}$<br>50 | 0.93<br>0.42 | 1.12<br>0.51 | 4 380<br>19 500 | 2 520<br>11 200 |
| $1^{1}/_{4}$ | C2F104ZMR | $1/_{32}$<br>33 | $^{19}/_{32}$<br>15 | 3<br>76.2 | $5^{39}/_{64}$<br>142.5 | $4^{19}/_{32}$<br>116.5 | $3^{17}/_{64}$<br>83 | $^{29}/_{64}$<br>11.5 | $^{3}/_{8}$<br>10 | $1^{21}/_{32}$<br>42.2 | | 0.88<br>0.40 | | 4 380<br>19 500 | 2 520<br>11 200 |
| $1^{1}/_{4}$ | C2F104ZM-L* | $1^{3}/_{8}$<br>35 | $^{21}/_{32}$<br>17 | $3^{1}/_{2}$<br>88.9 | $6^{1}/_{8}$<br>156 | $5^{1}/_{8}$<br>130 | $3^{25}/_{32}$<br>96 | $^{35}/_{64}$<br>14 | $^{1}/_{2}$<br>12 | $1^{53}/_{64}$<br>46.4 | $2^{3}/_{32}$<br>53.2 | 1.46<br>0.66 | 1.83<br>0.82 | 5 730<br>25 500 | 3 440<br>15 300 |
| $1^{7}/_{16}$ | C2F107ZM-L* | $1^{3}/_{8}$<br>35 | $^{21}/_{32}$<br>17 | $3^{1}/_{2}$<br>88.9 | $6^{1}/_{8}$<br>156 | $5^{1}/_{8}$<br>130 | $3^{25}/_{32}$<br>96 | $^{35}/_{64}$<br>14 | $^{1}/_{2}$<br>12 | $1^{53}/_{64}$<br>46.4 | $2^{3}/_{32}$<br>53.2 | 1.28<br>0.58 | 1.59<br>0.72 | 5 730<br>25 500 | 3 440<br>15 300 |
| $1^{1}/_{2}$ | C2F108ZM[1] | $1^{1}/_{4}$<br>31.8 | $^{9}/_{16}$<br>14.3 | $3^{1}/_{2}$<br>88.9 | $6^{25}/_{32}$<br>172.2 | $5^{21}/_{32}$<br>143.7 | $4^{9}/_{16}$<br>115.9 | $^{17}/_{32}$<br>13.5 | $^{1}/_{2}$<br>12 | $2^{1}/_{32}$<br>51.66 | | 1.90<br>0.86 | | 6 900<br>30 700 | 4 270<br>19 000 |
| $1^{15}/_{16}$ | C2F115ZM-L*[1 2] | $1^{1}/_{4}$<br>31.8 | $^{5}/_{8}$<br>15.9 | 4<br>101.6 | $7^{5}/_{16}$<br>185.7 | $6^{3}/_{16}$<br>157.2 | $5^{1}/_{16}$<br>128.6 | $^{17}/_{32}$<br>13.5 | $^{1}/_{2}$<br>12 | $2^{1}/_{8}$<br>54 | $2^{39}/_{64}$<br>66.3 | 2.25<br>1.02 | 2.73<br>1.23 | 7 890<br>35 100 | 5 220<br>23 200 |

*L suffix indicates eccentric locking collar

### For metric shafts 20mm - 40mm

| Shaft dia d | Flange unit designation | $A_1$ | $A_2$ | $D_a$ | H | J | L | N | G | T | Mass | Basic radial load rating dynamic C† | Basic radial load rating static $C_0$† |
|---|---|---|---|---|---|---|---|---|---|---|---|---|---|
| mm | | in<br>mm | in<br>mm | in<br>mm | in<br>mm | in<br>mm | in<br>mm | in<br>mm | in<br>mm | in<br>mm | lb<br>kg | lbf<br>N | lbf<br>N |
| 20 | C2F20ZM | $^{15}/_{32}$<br>29.5 | $^{19}/_{32}$<br>15 | 2<br>50.8 | $4^{13}/_{32}$<br>112 | $3^{17}/_{32}$<br>90 | $2^{3}/_{8}$<br>60.5 | $^{29}/_{64}$<br>11.5 | $^{3}/_{8}$<br>10 | $1^{15}/_{32}$<br>37.3 | 0.53<br>0.24 | 2 860<br>12 700 | 1 470<br>6 550 |
| 25 | C2F25ZM | $1^{3}/_{16}$<br>30 | $^{19}/_{32}$<br>15 | $2^{1}/_{2}$<br>63.5 | $4^{7}/_{8}$<br>124 | $3^{29}/_{32}$<br>99 | $2^{3}/_{4}$<br>70 | $^{29}/_{64}$<br>11.5 | $^{3}/_{8}$<br>10 | $1^{17}/_{32}$<br>38.8 | 0.64<br>0.29 | 3 150<br>14 000 | 1 750<br>7 800 |
| 30 | C2F30ZM | $1^{9}/_{32}$<br>33 | $^{19}/_{32}$<br>15 | 3<br>76.2 | $5^{39}/_{64}$<br>142.5 | $4^{19}/_{32}$<br>116.5 | $3^{17}/_{64}$<br>83 | $^{29}/_{64}$<br>11.5 | $^{3}/_{8}$<br>10 | $1^{21}/_{32}$<br>42.2 | 0.97<br>0.44 | 4 380<br>19 500 | 2 520<br>11 200 |
| 35 | C2F35ZM | $1^{3}/_{8}$<br>35 | $^{21}/_{32}$<br>17 | $3^{1}/_{2}$<br>88.9 | $6^{1}/_{8}$<br>156 | $5^{1}/_{8}$<br>130 | $3^{25}/_{32}$<br>96 | $^{35}/_{64}$<br>14 | $^{1}/_{2}$<br>12 | $1^{53}/_{64}$<br>46.4 | 1.35<br>0.61 | 5 730<br>25 500 | 3 440<br>15 300 |
| 40 | C2F40ZM[1] | $1^{1}/_{4}$<br>31.8 | $^{9}/_{16}$<br>14.3 | $3^{1}/_{2}$<br>88.9 | $6^{25}/_{32}$<br>172.2 | $5^{21}/_{32}$<br>143.7 | $4^{9}/_{16}$<br>115.9 | $^{17}/_{32}$<br>13.5 | $^{1}/_{2}$<br>12 | $2^{1}/_{32}$<br>51.7 | 1.90<br>0.86 | 6 900<br>30 700 | 4 270<br>19 000 |



MRC Marathon series composite mounted bearing units are greased and sealed for life. MRC does not recommend regreasing.
If required, units with relubrication fittings are available for your application. Adding a "G" suffix to the part number denotes a regreasable unit.
[1] Cast polymer housing, no steel coils.
[2] Check with MRC for availability.
† Capacities listed are for the insert bearing only and do not reflect the capacity of the housing. If the application loads exceed 80% of the static capacity (Co), MRC Applications Engineering should be consulted for a design review.

## C2F composite two-bolt flange units

Stainless steel insert bearing

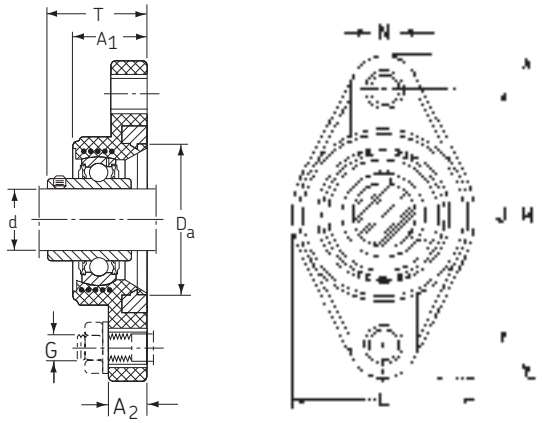


### For inch shafts $^{3}/_{4}$ – $1^{1}/_{2}$

| Shaft dia d | Flange unit designation | $A_1$ | $A_2$ | $D_a$ | H | J | L | N | G | T | Mass | Basic radial load rating dynamic C† | static $C_0$† |
|---|---|---|---|---|---|---|---|---|---|---|---|---|---|
| in | | in<br>mm | in<br>mm | in<br>mm | in<br>mm | in<br>mm | in<br>mm | in<br>mm | in<br>mm | in<br>mm | lb<br>kg | lbf<br>N | lbf<br>N |
| $^{3}/_{4}$ | C2F012SS | $^{15}/_{32}$<br>29.5 | $^{19}/_{32}$<br>15 | 2<br>50.8 | $4^{13}/_{32}$<br>112 | $3^{17}/_{32}$<br>90 | $2^{3}/_{8}$<br>60.5 | $^{29}/_{64}$<br>11.5 | $^{3}/_{8}$<br>10 | $1^{15}/_{32}$<br>37.3 | 0.53<br>0.24 | 2 430<br>10 800 | 1 470<br>6 550 |
| 1 | C2F100SS | $1^{3}/_{16}$<br>30 | $^{19}/_{32}$<br>15 | $2^{1}/_{2}$<br>63.5 | $4^{7}/_{8}$<br>124 | $3^{29}/_{32}$<br>99 | $2^{3}/_{4}$<br>70 | $^{29}/_{64}$<br>11.5 | $^{3}/_{8}$<br>10 | $1^{17}/_{32}$<br>38.8 | 0.62<br>0.28 | 2 670<br>11 900 | 1 750<br>7 800 |
| $1^{3}/_{16}$ | C2F103SS | $1^{9}/_{32}$<br>33 | $^{19}/_{32}$<br>15 | 3<br>76.2 | $5^{39}/_{64}$<br>142.5 | $4^{19}/_{32}$<br>116.5 | $3^{17}/_{64}$<br>83 | $^{29}/_{64}$<br>11.5 | $^{3}/_{8}$<br>10 | $1^{21}/_{32}$<br>42.2 | 0.93<br>0.42 | 3 660<br>16 300 | 2 520<br>11 200 |
| $1^{1}/_{4}$ | C2F104SSR | $1^{9}/_{32}$<br>33 | $^{19}/_{32}$<br>15 | 3<br>76.2 | $5^{39}/_{64}$<br>142.5 | $4^{19}/_{32}$<br>116.5 | $3^{17}/_{64}$<br>83 | $^{29}/_{64}$<br>11.5 | $^{3}/_{8}$<br>10 | $1^{21}/_{32}$<br>42.2 | 0.93<br>0.42 | 3 660<br>16 300 | 2 520<br>11 200 |
| $1^{1}/_{4}$ | C2F104SS | $1^{3}/_{8}$<br>35 | $^{21}/_{32}$<br>17 | $3^{1}/_{2}$<br>88.9 | $6^{1}/_{8}$<br>156 | $5^{1}/_{8}$<br>130 | $3^{25}/_{32}$<br>96 | $^{35}/_{64}$<br>14 | $^{1}/_{2}$<br>12 | $1^{53}/_{64}$<br>46.4 | 1.46<br>0.66 | 4 850<br>21 600 | 3 440<br>15 300 |
| $1^{3}/_{8}$ | C2F106SS | $1^{3}/_{8}$<br>35 | $^{21}/_{32}$<br>17 | $3^{1}/_{2}$<br>88.9 | $6^{1}/_{8}$<br>156 | $5^{1}/_{8}$<br>130 | $3^{25}/_{32}$<br>96 | $^{35}/_{64}$<br>14 | $^{1}/_{2}$<br>12 | $1^{53}/_{64}$<br>46.4 | 1.28<br>0.61 | 4 850<br>21 600 | 3 440<br>15 300 |
| $1^{7}/_{16}$ | C2F107SS | $1^{3}/_{8}$<br>35 | $^{21}/_{32}$<br>17 | $3^{1}/_{2}$<br>88.9 | $6^{1}/_{8}$<br>156 | $5^{1}/_{8}$<br>130 | $3^{25}/_{32}$<br>96 | $^{35}/_{64}$<br>14 | $^{1}/_{2}$<br>12 | $1^{53}/_{64}$<br>46.4 | 1.28<br>0.58 | 4 850<br>21 600 | 3 440<br>15 300 |
| $1^{1}/_{2}$ | C2F108SS[1] | $1^{1}/_{4}$<br>31.8 | $^{9}/_{16}$<br>14.3 | $3^{1}/_{2}$<br>88.9 | $6^{25}/_{32}$<br>172.2 | $5^{21}/_{32}$<br>143.7 | $4^{9}/_{16}$<br>115.9 | $^{17}/_{32}$<br>13.5 | $^{1}/_{2}$<br>12 | $2^{1}/_{32}$<br>51.7 | 1.90<br>0.86 | 5 550<br>24 700 | 4 270<br>19 000 |

### For metric shafts 20mm - 40mm

| Shaft dia d | Flange unit designation | $A_1$ | $A_2$ | $D_a$ | H | J | L | N | G | T | Mass | Basic radial load rating dynamic C† | static $C_0$† |
|---|---|---|---|---|---|---|---|---|---|---|---|---|---|
| mm | | in<br>mm | in<br>mm | in<br>mm | in<br>mm | in<br>mm | in<br>mm | in<br>mm | in<br>mm | in<br>mm | lb<br>kg | lbf<br>N | lbf<br>N |
| 20 | C2F20SS | $^{15}/_{32}$<br>29.5 | $^{19}/_{32}$<br>15 | 2<br>50.8 | $4^{13}/_{32}$<br>112 | $3^{17}/_{32}$<br>90 | $2^{3}/_{8}$<br>60.5 | $^{29}/_{64}$<br>11.5 | $^{3}/_{8}$<br>10 | $1^{15}/_{32}$<br>37.3 | 0.53<br>0.24 | 2 430<br>10 800 | 1 470<br>6 550 |
| 25 | C2F25SS | $1^{3}/_{16}$<br>30 | $^{19}/_{32}$<br>15 | $2^{1}/_{2}$<br>63.5 | $4^{7}/_{8}$<br>124 | $3^{29}/_{32}$<br>99 | $2^{3}/_{4}$<br>70 | $^{29}/_{64}$<br>11.5 | $^{3}/_{8}$<br>10 | $1^{17}/_{32}$<br>38.8 | 0.64<br>0.29 | 2 670<br>11 900 | 1 750<br>7 800 |
| 30 | C2F30SS | $1^{9}/_{32}$<br>33 | $^{19}/_{32}$<br>15 | 3<br>76.2 | $5^{39}/_{64}$<br>142.5 | $4^{19}/_{32}$<br>116.5 | $3^{17}/_{64}$<br>83 | $^{29}/_{64}$<br>11.5 | $^{3}/_{8}$<br>10 | $1^{21}/_{32}$<br>42.2 | 0.97<br>0.44 | 3 660<br>16 300 | 2 520<br>11 200 |
| 35 | C2F35SS | $1^{3}/_{8}$<br>35 | $^{21}/_{32}$<br>17 | $3^{1}/_{2}$<br>88.9 | $6^{1}/_{8}$<br>156 | $5^{1}/_{8}$<br>130 | $3^{25}/_{32}$<br>96 | $^{35}/_{64}$<br>14 | $^{1}/_{2}$<br>12 | $1^{53}/_{64}$<br>46.4 | 1.35<br>0.61 | 4 850<br>21 600 | 3 440<br>15 300 |
| 40 | C2F40SS[1] | $1^{1}/_{4}$<br>31.8 | $^{9}/_{16}$<br>14.3 | $3^{1}/_{2}$<br>88.9 | $6^{25}/_{32}$<br>172.2 | $5^{21}/_{32}$<br>143.7 | $4^{9}/_{16}$<br>115.9 | $^{17}/_{32}$<br>13.5 | $^{1}/_{2}$<br>12 | $2^{1}/_{32}$<br>51.7 | 1.90<br>0.86 | 5 550<br>24 700 | 4 270<br>19 000 |



MRC Marathon series composite mounted bearing units are greased and sealed for life. MRC does not recommend regreasing.
If required, units with relubrication fittings are available for your application. Adding a "G" suffix to the part number denotes a regreasable unit.

[1] Cast polymer housing, no steel coils.

† Capacities listed are for the insert bearing only and do not reflect the capacity of the housing. If the application loads exceed 80% of the static capacity (Co), MRC Applications Engineering should be consulted for a design review.

## C4F composite four-bolt flange units

ZMaRC-coated insert bearing
Available with standard set-screw mounting or
eccentric locking collar mounting

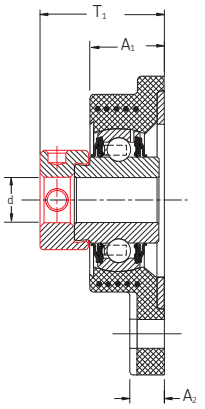


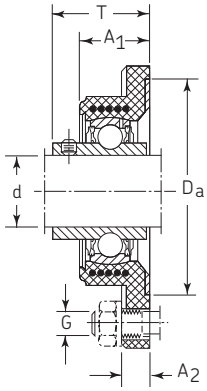


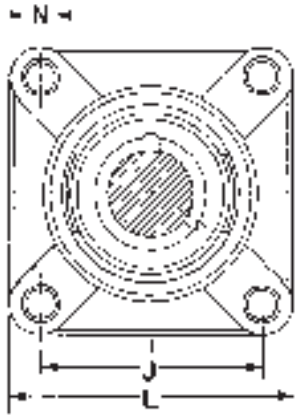


### For inch shafts $^{3}/_{4}$ – $1^{15}/_{16}$

| Shaft dia d | Flange unit designation | $A_1$ | $A_2$ | $D_a$ | J | L | N | G | T | $T_1$ | Mass double set-screw | Mass lock-collar | Basic radial load rating dynamic C† | Basic radial load rating static $C_0$† |
|---|---|---|---|---|---|---|---|---|---|---|---|---|---|---|
| in | | in<br>mm | in<br>mm | in<br>mm | in<br>mm | in<br>mm | in<br>mm | in<br>mm | in<br>mm | in<br>mm | lb<br>kg | lb<br>kg | lbf<br>N | lbf<br>N |
| $^{3}/_{4}$ | C4F012ZM | $1^{3}/_{16}$<br>30 | $^{19}/_{32}$<br>15 | $2^{11}/_{16}$<br>68.5 | $2^{1}/_{2}$<br>63.5 | $3^{3}/_{8}$<br>86 | $^{29}/_{64}$<br>11.5 | $^{3}/_{8}$<br>10 | $1^{15}/_{32}$<br>37.3 | | 0.57<br>0.26 | | 2 860<br>12 700 | 1 470<br>6 550 |
| $^{15}/_{16}$ | C4F015ZM | $1^{7}/_{32}$<br>31 | $^{19}/_{32}$<br>15 | $2^{15}/_{16}$<br>74.6 | $2^{3}/_{4}$<br>70 | $3^{3}/_{4}$<br>95 | $^{29}/_{64}$<br>11.5 | $^{3}/_{8}$<br>10 | $1^{17}/_{32}$<br>38.8 | | 0.76<br>0.34 | | 3 150<br>14 000 | 1 750<br>7 800 |
| 1 | C4F100ZM-L* | $1^{7}/_{32}$<br>31 | $^{19}/_{32}$<br>15 | $2^{15}/_{16}$<br>74.6 | $2^{3}/_{4}$<br>70 | $3^{3}/_{4}$<br>95 | $^{29}/_{64}$<br>11.5 | $^{3}/_{8}$<br>10 | $1^{17}/_{32}$<br>38.8 | $1^{13}/_{16}$<br>46 | 0.71<br>0.32 | 0.83<br>0.37 | 3 150<br>14 000 | 1 750<br>7 800 |
| $1^{1}/_{8}$ | C4F102ZM | $1^{9}/_{32}$<br>33 | $^{19}/_{32}$<br>15 | $3^{11}/_{16}$<br>93.7 | $3^{1}/_{4}$<br>82.5 | $4^{1}/_{4}$<br>108 | $^{29}/_{64}$<br>11.5 | $^{3}/_{8}$<br>10 | $1^{21}/_{32}$<br>42.2 | | 1.07<br>0.49 | | 4 380<br>19 500 | 2 520<br>11 200 |
| $1^{3}/_{16}$ | C4F103ZM-L* | $1^{9}/_{32}$<br>33 | $^{19}/_{32}$<br>15 | $3^{11}/_{16}$<br>93.7 | $3^{1}/_{4}$<br>82.5 | $4^{1}/_{4}$<br>108 | $^{29}/_{64}$<br>11.5 | $^{3}/_{8}$<br>10 | $1^{21}/_{32}$<br>42.2 | $1^{31}/_{32}$<br>50 | 1.01<br>0.46 | 1.20<br>0.55 | 4 380<br>19 500 | 2 520<br>11 200 |
| $1^{1}/_{4}$ | C4F104ZMR | $1^{9}/_{32}$<br>33 | $^{19}/_{32}$<br>15 | $3^{11}/_{16}$<br>93.7 | $3^{1}/_{4}$<br>82.5 | $4^{1}/_{4}$<br>108 | $^{29}/_{64}$<br>11.5 | $^{3}/_{8}$<br>10 | $1^{21}/_{32}$<br>42.2 | | 0.97<br>0.44 | | 4 380<br>19 500 | 2 520<br>11 200 |
| $1^{1}/_{4}$ | C4F104ZM-L* | $1^{3}/_{8}$<br>35 | $^{21}/_{32}$<br>17 | $4^{3}/_{16}$<br>106.4 | $3^{5}/_{8}$<br>92 | $4^{5}/_{8}$<br>118 | $^{35}/_{64}$<br>14 | $^{1}/_{2}$<br>12 | $1^{53}/_{64}$<br>46.4 | $2^{3}/_{32}$<br>53.2 | 1.57<br>0.71 | 1.94<br>0.87 | 5 730<br>25 500 | 3 440<br>15 300 |
| $1^{7}/_{16}$ | C4F107ZM-L* | $1^{3}/_{8}$<br>35 | $^{21}/_{32}$<br>17 | $4^{3}/_{16}$<br>106.4 | $3^{5}/_{8}$<br>92 | $4^{5}/_{8}$<br>118 | $^{35}/_{64}$<br>14 | $^{1}/_{2}$<br>12 | $1^{53}/_{64}$<br>46.4 | $2^{3}/_{32}$<br>53.2 | 1.37<br>0.62 | 1.68<br>0.76 | 5 730<br>25 500 | 3 440<br>15 300 |
| $1^{1}/_{2}$ | C4F108ZM | $1^{17}/_{32}$<br>39 | $^{21}/_{32}$<br>17 | $4^{9}/_{16}$<br>115.9 | 4<br>101.5 | $5^{1}/_{8}$<br>130 | $^{35}/_{64}$<br>14 | $^{1}/_{2}$<br>12 | $^{29}/_{64}$<br>54.2 | | 1.98<br>0.90 | | 6 900<br>30 700 | 4 270<br>19 000 |
| $1^{15}/_{16}$ | C4F115ZM-L* [1] [2] | $1^{1}/_{4}$<br>31.8 | $^{5}/_{8}$<br>15.9 | $4^{15}/_{16}$<br>125.4 | $4^{3}/_{8}$<br>111.1 | $5^{1}/_{2}$<br>139.7 | $^{35}/_{64}$<br>14 | $^{1}/_{2}$<br>12 | $2^{1}/_{8}$<br>54.0 | $2^{17}/_{32}$<br>64.3 | 2.45<br>1.21 | 2.93<br>1.42 | 7 890<br>35 100 | 5 220<br>23 200 |

*L suffix indicates eccentric locking collar

### For metric shafts 20mm - 40mm

| Shaft dia d | Flange unit designation | $A_1$ | $A_2$ | $D_a$ | J | L | N | G | T | Mass | Basic radial load rating dynamic C† | Basic radial load rating static $C_0$† |
|---|---|---|---|---|---|---|---|---|---|---|---|---|
| mm | | in<br>mm | in<br>mm | in<br>mm | in<br>mm | in<br>mm | in<br>mm | in<br>mm | in<br>mm | lb<br>kg | lbf<br>N | lbf<br>N |
| 20 | C4F20ZM | $1^{3}/_{16}$<br>30 | $^{19}/_{32}$<br>15 | $2^{11}/_{16}$<br>68.3 | $2^{1}/_{2}$<br>63.5 | $3^{3}/_{8}$<br>86 | $^{29}/_{64}$<br>11.5 | $^{3}/_{8}$<br>10 | $1^{15}/_{32}$<br>37.3 | 0.57<br>0.26 | 2 860<br>12 700 | 1 470<br>6 550 |
| 25 | C4F25ZM | $1^{7}/_{32}$<br>31 | $^{19}/_{32}$<br>15 | $2^{15}/_{16}$<br>74.6 | $2^{3}/_{4}$<br>70 | $3^{3}/_{4}$<br>95 | $^{29}/_{64}$<br>11.5 | $^{3}/_{8}$<br>10 | $1^{17}/_{32}$<br>38.8 | 0.73<br>0.33 | 3 150<br>14 000 | 1 750<br>7 800 |
| 30 | C4F30ZM | $1^{9}/_{32}$<br>33 | $^{19}/_{32}$<br>15 | $3^{11}/_{16}$<br>93.7 | $3^{1}/_{4}$<br>82.5 | $4^{1}/_{4}$<br>108 | $^{29}/_{64}$<br>11.5 | $^{3}/_{8}$<br>10 | $1^{21}/_{32}$<br>42.2 | 1.06<br>0.48 | 4 380<br>19 500 | 2 520<br>11 200 |
| 35 | C4F35ZM | $1^{3}/_{8}$<br>35 | $^{21}/_{32}$<br>17 | $4^{3}/_{16}$<br>106.4 | $3^{5}/_{8}$<br>92 | $4^{5}/_{8}$<br>118 | $^{35}/_{64}$<br>14 | $^{1}/_{2}$<br>12 | $1^{53}/_{64}$<br>46.4 | 1.46<br>0.66 | 5 730<br>25 500 | 3 440<br>15 300 |
| 40 | C4F40ZM | $1^{17}/_{32}$<br>39 | $^{21}/_{32}$<br>17 | $4^{9}/_{16}$<br>115.9 | 4<br>101.5 | $5^{1}/_{8}$<br>130 | $^{35}/_{64}$<br>14 | $^{1}/_{2}$<br>12 | $2^{9}/_{64}$<br>54.2 | 1.92<br>0.87 | 6 900<br>30 700 | 4 270<br>19 000 |



MRC Marathon series composite mounted bearing units are greased and sealed for life. MRC does not recommend regreasing.
If required, units with relubrication fittings are available for your application. Adding a "G" suffix to the part number denotes a regreasable unit.
[1] Cast polymer housing, no steel coils.
[2] Check with MRC for availability.
† Capacities listed are for the insert bearing only and do not reflect the capacity of the housing. If the application loads exceed 80% of the static capacity (Co), MRC Applications Engineering should be consulted for a design review.

## C4F composite four-bolt flange units

Stainless steel insert bearing

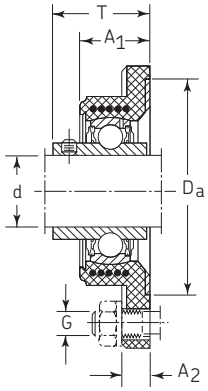


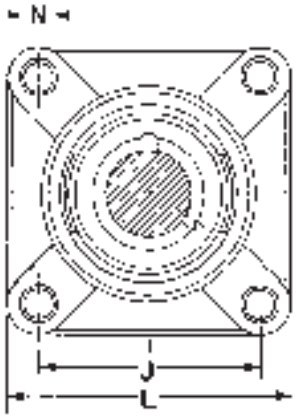


### For inch shafts $^3/_4$ – $1^1/_2$

| Shaft dia d | Flange unit designation | $A_1$ | $A_2$ | $D_a$ | J | L | N | G | T | Mass | Basic radial load rating dynamic C† | static $C_0$† |
|---|---|---|---|---|---|---|---|---|---|---|---|---|
| in | | in<br>mm | in<br>mm | in<br>mm | in<br>mm | in<br>mm | in<br>mm | in<br>mm | in<br>mm | lb<br>kg | lbf<br>N | lbf<br>N |
| 3/4 | C4F012SS | $1^3/_{16}$<br>30 | $^{19}/_{32}$<br>15 | $2^{11}/_{16}$<br>68.3 | $2^1/_2$<br>63.5 | $3^3/_8$<br>86 | $^{29}/_{64}$<br>11.5 | $^3/_8$<br>10 | $1^{15}/_{32}$<br>37.3 | 0.57<br>0.26 | 2 430<br>10 800 | 1 470<br>6 550 |
| 1 | C4F100SS | $1^7/_{32}$<br>31 | $^{19}/_{32}$<br>15 | $2^{15}/_{16}$<br>74.6 | $2^3/_4$<br>70 | $3^3/_4$<br>95 | $^{29}/_{64}$<br>11.5 | $^3/_8$<br>10 | $1^{17}/_{32}$<br>38.8 | 0.71<br>0.32 | 2 670<br>11 900 | 1 750<br>7 800 |
| $1^3/_{16}$ | C4F103SS | $1^9/_{32}$<br>33 | $^{19}/_{32}$<br>15 | $3^{11}/_{16}$<br>93.7 | $3^1/_4$<br>82.5 | $4^1/_4$<br>108 | $^{29}/_{64}$<br>11.5 | $^3/_8$<br>10 | $1^{21}/_{32}$<br>42.2 | 1.01<br>0.46 | 3 660<br>16 300 | 2 520<br>11 200 |
| $1^1/_4$ | C4F104SSR | $1^1/_{16}$<br>27 | $^1/_2$<br>12.7 | $3^{11}/_{16}$<br>93.7 | $3^1/_4$<br>82.5 | $4^1/_4$<br>108 | $^{15}/_{32}$<br>11.9 | $^7/_{16}$<br>11.1 | $1^{43}/_{64}$<br>42.5 | 1.40<br>0.63 | 3 660<br>16 300 | 2 520<br>11 200 |
| $1^1/_4$ | C4F104SS | $1^3/_8$<br>35 | $^{21}/_{32}$<br>17 | $4^3/_{16}$<br>106.4 | $3^5/_8$<br>92 | $4^5/_8$<br>118 | $^{35}/_{64}$<br>14 | $^1/_2$<br>12 | $1^{53}/_{64}$<br>46.4 | 1.57<br>0.71 | 4 850<br>21 600 | 3 440<br>15 300 |
| $1^3/_8$ | C4F106SS | $1^3/_8$<br>35 | $^{21}/_{32}$<br>17 | $4^3/_{16}$<br>106.4 | $3^5/_8$<br>92 | $4^5/_8$<br>118 | $^{35}/_{64}$<br>14 | $^1/_2$<br>12 | $1^{53}/_{64}$<br>46.4 | 1.46<br>0.66 | 4 850<br>21 600 | 3 440<br>15 300 |
| $1^7/_{16}$ | C4F107SS | $1^3/_8$<br>35 | $^{21}/_{32}$<br>17 | $4^3/_{16}$<br>106.4 | $3^5/_8$<br>92 | $4^5/_8$<br>118 | $^{35}/_{64}$<br>14 | $^1/_2$<br>12 | $1^{53}/_{64}$<br>46.4 | 1.37<br>0.62 | 4 850<br>21 600 | 3 440<br>15 300 |
| $1^1/_2$ | C4F108SS | $1^{17}/_{32}$<br>39 | $^{21}/_{32}$<br>17 | $4^9/_{16}$<br>115.9 | 4<br>101.5 | $5^1/_8$<br>130 | $^{35}/_{64}$<br>14 | $^1/_2$<br>12 | $2^9/_{64}$<br>54.2 | 1.98<br>0.90 | 5 550<br>24 700 | 4 270<br>19 000 |

### For metric shafts 20mm - 40mm

| Shaft dia d | Flange unit designation | $A_1$ | $A_2$ | $D_a$ | J | L | N | G | T | Mass | Basic radial load rating dynamic C† | static $C_0$† |
|---|---|---|---|---|---|---|---|---|---|---|---|---|
| mm | | in<br>mm | in<br>mm | in<br>mm | in<br>mm | in<br>mm | in<br>mm | in<br>mm | in<br>mm | lb<br>kg | lbf<br>N | lbf<br>N |
| 20 | C4F20SS | $1^3/_{16}$<br>30 | $^{19}/_{32}$<br>15 | $2^{11}/_{16}$<br>68.3 | $2^1/_2$<br>63.5 | $3^3/_8$<br>86 | $^{29}/_{64}$<br>11.5 | $^3/_8$<br>10 | $1^{15}/_{32}$<br>37.3 | 0.57<br>0.26 | 2 430<br>10 800 | 1 470<br>6 550 |
| 25 | C4F25SS | $1^7/_{32}$<br>31 | $^{19}/_{32}$<br>15 | $2^{15}/_{16}$<br>74.6 | $2^3/_4$<br>70 | $3^3/_4$<br>95 | $^{29}/_{64}$<br>11.5 | $^3/_8$<br>10 | $1^{17}/_{32}$<br>38.8 | 0.73<br>0.33 | 2 670<br>11 900 | 1 750<br>7 800 |
| 30 | C4F30SS | $1^9/_{32}$<br>33 | $^{19}/_{32}$<br>15 | $3^{11}/_{16}$<br>93.7 | $3^1/_4$<br>82.5 | $4^1/_4$<br>108 | $^{29}/_{64}$<br>11.5 | $^3/_8$<br>10 | $1^{21}/_{32}$<br>42.2 | 1.06<br>0.48 | 3 660<br>16 300 | 2 520<br>11 200 |
| 35 | C4F35SS | $1^3/_8$<br>35 | $^{21}/_{32}$<br>17 | $4^3/_{16}$<br>106.4 | $3^5/_8$<br>92 | $4^5/_8$<br>118 | $^{35}/_{64}$<br>14 | $^1/_2$<br>12 | $1^{53}/_{64}$<br>46.4 | 1.46<br>0.66 | 4 850<br>21 600 | 3 440<br>15 300 |
| 40 | C4F40SS | $1^{17}/_{32}$<br>39 | $^{21}/_{32}$<br>17 | $4^9/_{16}$<br>115.9 | 4<br>101.5 | $5^1/_8$<br>130 | $^{35}/_{64}$<br>14 | $^1/_2$<br>12 | $2^9/_{64}$<br>54.2 | 1.92<br>0.87 | 5 550<br>24 700 | 4 270<br>19 000 |



MRC Marathon series composite mounted bearing units are greased and sealed for life. MRC does not recommend regreasing.
If required, units with relubrication fittings are available for your application. Adding a "G" suffix to the part number denotes a regreasable unit.
† Capacities listed are for the insert bearing only and do not reflect the capacity of the housing. If the application loads exceed 80% of the static capacity (Co), MRC Applications Engineering should be consulted for a design review.

## CTB composite tapped-base units

ZMaRC-coated insert bearing
Available with standard set-screw mounting or
eccentric locking collar mounting

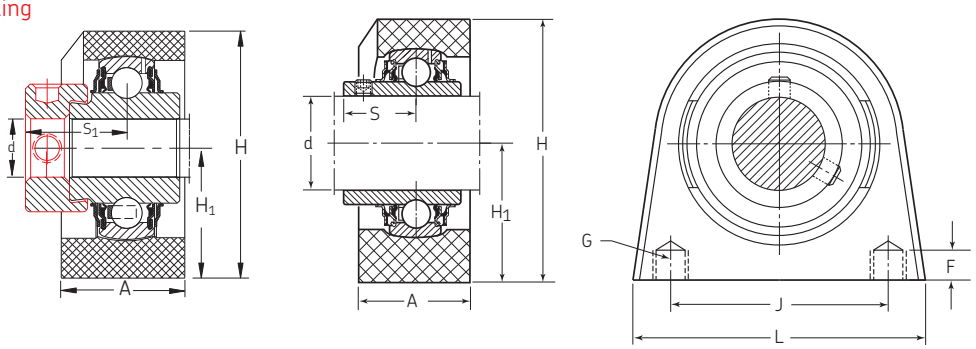


### For inch shafts $^{3}/_{4}$ – $1^{15}/_{16}$

| Shaft dia d | Tapped-base unit designation | A | H | $H_1$ | J | L | F | G | S | $S_1$ | Mass double set-screw | Mass lock-collar | Basic radial load rating dynamic $C^{\dagger}$ | Basic radial load rating static $C_0{}^{\dagger}$ |
|---|---|---|---|---|---|---|---|---|---|---|---|---|---|---|
| in | | in<br>mm | in<br>mm | in<br>mm | in<br>mm | in<br>mm | in<br>mm | UNC threads | in<br>mm | in<br>mm | lb<br>kg | lb<br>kg | lbf<br>N | lbf<br>N |
| $^{3}/_{4}$ | CTB012ZM | $1^{7}/_{16}$<br>36.5 | $2^{5}/_{8}$<br>66.7 | $1^{5}/_{16}$<br>33.3 | 2<br>50.8 | 3<br>76.2 | $^{1}/_{2}$<br>12.7 | $^{3}/_{8}$ –16 | $^{23}/_{32}$<br>18.3 | | 0.51<br>0.23 | | 2 860<br>12 700 | 1 470<br>6 550 |
| $^{15}/_{16}$ | CTB015ZM | $1^{7}/_{16}$<br>36.5 | $2^{15}/_{16}$<br>74.6 | $1^{7}/_{16}$<br>36.5 | 2<br>50.8 | $3^{1}/_{4}$<br>82.5 | $^{1}/_{2}$<br>12.7 | $^{3}/_{8}$ –16 | $^{25}/_{32}$<br>19.8 | | 0.72<br>0.32 | | 3 150<br>14 000 | 1 750<br>7 800 |
| 1 | CTB100ZM-L* | $1^{7}/_{16}$<br>36.5 | $2^{15}/_{16}$<br>74.6 | $1^{7}/_{16}$<br>36.5 | 2<br>50.8 | $3^{1}/_{4}$<br>82.5 | $^{1}/_{2}$<br>12.7 | $^{3}/_{8}$ –16 | $^{25}/_{32}$<br>19.8 | $1^{1}/_{16}$<br>27.0 | 0.67<br>0.30 | 0.79<br>0.35 | 3 150<br>14 000 | 1 750<br>7 800 |
| $1^{1}/_{8}$ | CTB102ZM | $1^{5}/_{8}$<br>41.3 | $3^{3}/_{8}$<br>85.7 | $1^{11}/_{16}$<br>42.9 | 3<br>76.2 | $4^{1}/_{4}$<br>108.0 | $^{5}/_{8}$<br>15.9 | $^{7}/_{16}$ –14 | $^{7}/_{8}$<br>22.2 | | 1.06<br>0.48 | | 4 380<br>19 500 | 2 520<br>11 200 |
| $1^{3}/_{16}$ | CTB103ZM-L* | $1^{5}/_{8}$<br>41.3 | $3^{3}/_{8}$<br>85.7 | $1^{11}/_{16}$<br>42.9 | 3<br>76.2 | $4^{1}/_{4}$<br>108.0 | $^{5}/_{8}$<br>15.9 | $^{7}/_{16}$ –14 | $^{7}/_{8}$<br>22.2 | $1^{3}/_{16}$<br>30.2 | 1.00<br>0.45 | 1.19<br>0.54 | 4 380<br>19 500 | 2 520<br>11 200 |
| $1^{1}/_{4}$ | CTB104ZMR | $1^{5}/_{8}$<br>41.3 | $3^{3}/_{8}$<br>85.7 | $1^{11}/_{16}$<br>42.9 | 3<br>76.2 | $4^{1}/_{4}$<br>108.0 | $^{5}/_{8}$<br>15.9 | $^{7}/_{16}$ –14 | $^{7}/_{8}$<br>22.2 | | 1.00<br>0.45 | | 4 380<br>19 500 | 2 520<br>11 200 |
| $1^{1}/_{4}$ | CTB104ZM-L* | $1^{3}/_{4}$<br>44.5 | $3^{7}/_{8}$<br>98.4 | $1^{7}/_{8}$<br>47.6 | $3^{1}/_{4}$<br>82.6 | $4^{1}/_{2}$<br>114.3 | $^{3}/_{4}$<br>19.1 | $^{1}/_{2}$ –13 | 1<br>25.4 | $1^{9}/_{32}$<br>32.5 | 1.60<br>0.73 | 1.97<br>0.89 | 5 730<br>25 500 | 3 440<br>15 300 |
| $1^{7}/_{16}$ | CTB107ZM-L* | $1^{3}/_{4}$<br>44.5 | $3^{7}/_{8}$<br>98.4 | $1^{7}/_{8}$<br>47.6 | $3^{1}/_{4}$<br>82.6 | $4^{1}/_{2}$<br>114.3 | $^{3}/_{4}$<br>19.1 | $^{1}/_{2}$ –13 | 1<br>25.4 | $1^{9}/_{32}$<br>32.5 | 1.40<br>0.64 | 1.71<br>0.78 | 5 730<br>25 500 | 3 440<br>15 300 |
| $1^{1}/_{2}$ | CTB108ZM | $1^{7}/_{8}$<br>47.6 | $4^{1}/_{8}$<br>104.8 | $1^{15}/_{16}$<br>49.2 | $3^{1}/_{2}$<br>88.9 | $4^{3}/_{4}$<br>120.7 | 3/4<br>19.1 | $^{1}/_{2}$ –13 | $1^{3}/_{16}$<br>30 | | 2.00<br>0.91 | | 6 900<br>30 700 | 4 270<br>19 000 |
| $1^{15}/_{16}$ | CTB115ZM-L* | $2^{1}/_{8}$<br>54 | $4^{3}/_{4}$<br>120.7 | $2^{1}/_{4}$<br>57.2 | 4<br>101.6 | $5^{3}/_{4}$<br>146.1 | $^{7}/_{8}$<br>22.2 | $^{5}/_{8}$ –11 | $1^{9}/_{32}$<br>32.6 | $1^{1}/_{2}$<br>38.1 | 2.65<br>1.20 | 3.13<br>1.41 | 7 890<br>35 100 | 5 220<br>23 200 |

*L suffix indicates eccentric locking collar

### For metric shafts 20mm - 40mm

| Shaft dia d | Tapped-base unit designation | A | H | $H_1$ | J | L | F | G | $S_1$ | Mass | Basic radial load rating dynamic $C^{\dagger}$ | Basic radial load rating static $C_0{}^{\dagger}$ |
|---|---|---|---|---|---|---|---|---|---|---|---|---|
| mm | | in<br>mm | in<br>mm | in<br>mm | in<br>mm | in<br>mm | in<br>mm | UNC threads | in<br>mm | lb<br>kg | lbf<br>N | lbf<br>N |
| 20 | CTB20ZM | $1^{7}/_{16}$<br>36.5 | $2^{5}/_{8}$<br>66.7 | $1^{5}/_{16}$<br>33.3 | 2<br>50.8 | 3<br>76.2 | $^{1}/_{2}$<br>12.7 | $^{3}/_{8}$ –16 | $^{23}/_{32}$<br>18.3 | 0.51<br>0.23 | 2 860<br>12 700 | 1 470<br>6 550 |
| 25 | CTB25ZM | $1^{7}/_{16}$<br>36.5 | $2^{15}/_{16}$<br>74.6 | $1^{7}/_{16}$<br>36.5 | 2<br>50.8 | $3^{1}/_{4}$<br>82.5 | $^{1}/_{2}$<br>12.7 | $^{3}/_{8}$ –16 | $^{25}/_{32}$<br>19.8 | 0.67<br>0.30 | 3 150<br>14 000 | 1 750<br>7 800 |
| 30 | CTB30ZM | $1^{5}/_{8}$<br>41.3 | $3^{3}/_{8}$<br>85.7 | $1^{11}/_{16}$<br>42.9 | 3<br>76.2 | $4^{1}/_{4}$<br>108.0 | $^{5}/_{8}$<br>15.9 | $^{7}/_{16}$ –14 | $^{7}/_{8}$<br>22.2 | 1.00<br>0.45 | 4 380<br>19 500 | 2 520<br>11 200 |
| 35 | CTB35ZM | $1^{3}/_{4}$<br>44.5 | $3^{7}/_{8}$<br>98.4 | $1^{7}/_{8}$<br>47.6 | $3^{1}/_{4}$<br>82.6 | $4^{1}/_{2}$<br>114.3 | $^{3}/_{4}$<br>19.1 | $^{1}/_{2}$ –13 | 1<br>25.4 | 1.40<br>0.64 | 5 730<br>25 500 | 3 440<br>15 300 |
| 40 | CTB40ZM | $1^{7}/_{8}$<br>47.6 | $4^{1}/_{8}$<br>104.8 | $1^{15}/_{16}$<br>49.2 | $3^{1}/_{2}$<br>88.9 | $4^{3}/_{4}$<br>120.7 | $^{3}/_{4}$<br>19.1 | $^{1}/_{2}$ –13 | $1^{3}/_{16}$<br>30 | 2.00<br>0.91 | 6 900<br>30 700 | 4 270<br>19 000 |



MRC Marathon series composite mounted bearing units are greased and sealed for life. MRC does not recommend regreasing.
If required, units with relubrication fittings are available for your application. Adding a "G" suffix to the part number denotes a regreasable unit.
Cast polymer housing. No steel coils.
† Capacities listed are for the insert bearing only and do not reflect the capacity of the housing. If the application loads exceed 80% of the static capacity (Co), MRC Applications Engineering should be consulted for a design review.

## CTB composite tapped-base units
Stainless steel insert bearing

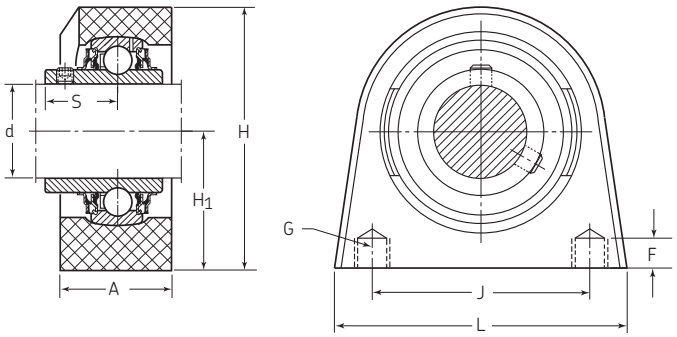


### For inch shafts $^{3}/_{4}$ – $1^{1}/_{2}$

| Shaft dia d | Tapped-base unit designation | A | H | $H_1$ | J | L | F | G | $S_1$ | Mass | Basic radial load rating dynamic C† | static $C_0$† |
|---|---|---|---|---|---|---|---|---|---|---|---|---|
| in | | in<br>mm | in<br>mm | in<br>mm | in<br>mm | in<br>mm | in<br>mm | UNC threads | in<br>mm | lb<br>kg | lbf<br>N | lbf<br>N |
| $^{3}/_{4}$ | CTB012SS | $1^{7}/_{16}$<br>36.5 | $2^{5}/_{8}$<br>66.7 | $1^{5}/_{16}$<br>33.3 | 2<br>50.8 | 3<br>76.2 | $^{1}/_{2}$<br>12.7 | $^{3}/_{8}$ –16 | $^{23}/_{32}$<br>18.3 | 0.51<br>0.23 | 2 430<br>10 800 | 1 470<br>6 550 |
| 1 | CTB100SS | $1^{7}/_{16}$<br>36.5 | $2^{15}/_{16}$<br>74.6 | $1^{7}/_{16}$<br>36.5 | 2<br>50.8 | $3^{1}/_{4}$<br>82.5 | $^{1}/_{2}$<br>12.7 | $^{3}/_{8}$ –16 | $^{25}/_{32}$<br>19.8 | 0.67<br>0.30 | 2 670<br>11 900 | 1 750<br>7 800 |
| $1^{3}/_{16}$ | CTB103SS | $1^{5}/_{8}$<br>41.3 | $3^{3}/_{8}$<br>85.7 | $1^{11}/_{16}$<br>42.9 | 3<br>76.2 | $4^{1}/_{4}$<br>108.0 | $^{5}/_{8}$<br>15.9 | $^{7}/_{16}$ –14 | $^{7}/_{8}$<br>22.2 | 1.00<br>0.45 | 3 660<br>16 300 | 2 520<br>11 200 |
| $1^{1}/_{4}$ | CTB104SSR | $1^{5}/_{8}$<br>41.3 | $3^{3}/_{8}$<br>85.7 | $1^{11}/_{16}$<br>42.9 | 3<br>76.2 | $4^{1}/_{4}$<br>108.0 | $^{5}/_{8}$<br>15.9 | $^{7}/_{16}$ –14 | 1<br>25.4 | 1.30<br>0.59 | 3 660<br>16 300 | 2 520<br>11 200 |
| $1^{1}/_{4}$ | CTB104SS | $1^{3}/_{4}$<br>44.5 | $3^{7}/_{8}$<br>98.4 | $1^{7}/_{8}$<br>47.6 | $3^{1}/_{4}$<br>82.6 | $4^{1}/_{2}$<br>114.3 | $^{3}/_{4}$<br>19.1 | $^{1}/_{2}$ –13 | 1<br>25.4 | 1.60<br>0.73 | 4 850<br>21 600 | 3 440<br>15 300 |
| $1^{3}/_{8}$ | CTB106SS | $1^{3}/_{4}$<br>44.5 | $3^{7}/_{8}$<br>98.4 | $1^{7}/_{8}$<br>47.6 | $3^{1}/_{4}$<br>82.6 | $4^{1}/_{2}$<br>114.3 | $^{3}/_{4}$<br>19.1 | $^{1}/_{2}$ –13 | 1<br>25.4 | 1.60<br>0.73 | 4 850<br>21 600 | 3 440<br>15 300 |
| $1^{7}/_{16}$ | CTB107SS | $1^{3}/_{4}$<br>44.5 | $3^{7}/_{8}$<br>98.4 | $1^{7}/_{8}$<br>47.6 | $3^{1}/_{4}$<br>82.6 | $4^{1}/_{2}$<br>114.3 | $^{3}/_{4}$<br>19.1 | $^{1}/_{2}$ –13 | 1<br>25.4 | 1.60<br>0.73 | 4 850<br>21 600 | 3 440<br>15 300 |
| $1^{1}/_{2}$ | CTB108SS | $1^{7}/_{8}$<br>47.6 | $4^{1}/_{8}$<br>104.8 | $1^{15}/_{16}$<br>49.2 | $3^{1}/_{2}$<br>88.9 | $4^{3}/_{4}$<br>120.7 | $^{3}/_{4}$<br>19.1 | $^{1}/_{2}$ –13 | $1^{3}/_{16}$<br>30 | 2.00<br>0.91 | 5 550<br>24 700 | 4 270<br>19 000 |

### For metric shafts 20mm - 40mm

| Shaft dia d | Tapped-base unit designation | A | H | $H_1$ | J | L | F | G | $S_1$ | Mass | Basic radial load rating dynamic C† | static $C_0$† |
|---|---|---|---|---|---|---|---|---|---|---|---|---|
| mm | | in<br>mm | in<br>mm | in<br>mm | in<br>mm | in<br>mm | in<br>mm | UNC threads | in<br>mm | lb<br>kg | lbf<br>N | lbf<br>N |
| 20 | CTB20SS | $1^{7}/_{16}$<br>36.5 | $2^{5}/_{8}$<br>66.7 | $1^{5}/_{16}$<br>33.3 | 2<br>50.8 | 3<br>76.2 | $^{1}/_{2}$<br>12.7 | $^{3}/_{8}$ –16 | $^{23}/_{32}$<br>18.3 | 0.51<br>0.23 | 2 430<br>10 800 | 1 470<br>6 550 |
| 25 | CTB25SS | $1^{7}/_{16}$<br>36.5 | $2^{15}/_{16}$<br>74.6 | $1^{7}/_{16}$<br>36.5 | 2<br>50.8 | $3^{1}/_{4}$<br>82.5 | $^{1}/_{2}$<br>12.7 | $^{3}/_{8}$ –16 | $^{25}/_{32}$<br>19.8 | 0.67<br>0.30 | 2 670<br>11 900 | 1 750<br>7 800 |
| 30 | CTB30SS | $1^{5}/_{8}$<br>41.3 | $3^{3}/_{8}$<br>85.7 | $1^{11}/_{16}$<br>42.9 | 3<br>76.2 | $4^{1}/_{4}$<br>108.0 | $^{5}/_{8}$<br>15.9 | $^{7}/_{16}$ –14 | $^{7}/_{8}$<br>22.2 | 1.00<br>0.45 | 3 660<br>16 300 | 2 520<br>11 200 |
| 35 | CTB35SS | $1^{3}/_{4}$<br>44.5 | $3^{7}/_{8}$<br>98.4 | $1^{7}/_{8}$<br>47.6 | $3^{1}/_{4}$<br>82.6 | $4^{1}/_{2}$<br>114.3 | $^{3}/_{4}$<br>19.1 | $^{1}/_{2}$ –13 | 1<br>25.4 | 1.40<br>0.64 | 4 850<br>21 600 | 3 440<br>15 300 |
| 40 | CTB40SS | $1^{7}/_{8}$<br>47.6 | $4^{1}/_{8}$<br>104.8 | $1^{15}/_{16}$<br>49.2 | $3^{1}/_{2}$<br>88.9 | $4^{3}/_{4}$<br>120.7 | $^{3}/_{4}$<br>19.1 | $^{1}/_{2}$ –13 | $1^{3}/_{16}$<br>30 | 2.00<br>0.91 | 5 550<br>24 700 | 4 270<br>19 000 |



MRC Marathon series composite mounted bearing units are greased and sealed for life. MRC does not recommend regreasing.
If required, units with relubrication fittings are available for your application. Adding a "G" suffix to the part number denotes a regreasable unit.
Cast polymer housing. No steel coils.
† Capacities listed are for the insert bearing only and do not reflect the capacity of the housing. If the application loads exceed 80% of the static capacity (Co), MRC Applications Engineering should be consulted for a design review.

## CBF composite three-bolt bracket flange units

ZMaRC-coated insert bearing

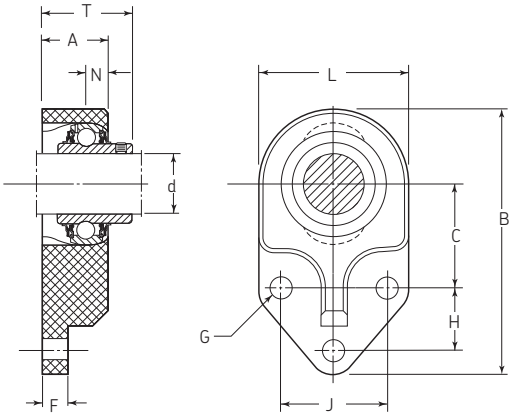


### For inch shafts $^{3}/_{4}$ – $1^{15}/_{16}$

| Shaft dia d | Flange unit designation | A | F | B | C | L | H | J | N | G | T | Bolt size | Mass | Basic radial load rating dynamic C† | static $C_0$† |
|---|---|---|---|---|---|---|---|---|---|---|---|---|---|---|---|
| in | | in<br>mm | in<br>mm | in<br>mm | in<br>mm | in<br>mm | in<br>mm | in<br>mm | in<br>mm | in<br>mm | in<br>mm | in | lb<br>kg | lbf<br>N | lbf<br>N |
| $^{3}/_{4}$ | CBF012ZM | $^{15}/_{16}$<br>23.8 | $^{7}/_{16}$<br>11.1 | $4^{11}/_{32}$<br>110.3 | $1^{11}/_{16}$<br>42.9 | $2^{9}/_{16}$<br>65.1 | $^{7}/_{8}$<br>22.2 | $1^{1}/_{2}$<br>38.1 | $^{11}/_{32}$<br>8.7 | $^{13}/_{32}$<br>10.3 | $1^{5}/_{16}$<br>33.3 | $^{3}/_{8}$ | 0.51<br>0.23 | 2 860<br>12 700 | 1 470<br>6 550 |
| $^{15}/_{16}$ | CBF015ZM[2] | 1<br>25.4 | $^{1}/_{2}$<br>12.7 | $4^{3}/_{4}$<br>120.7 | $1^{13}/_{16}$<br>46.0 | $2^{3}/_{4}$<br>69.9 | $1^{1}/_{8}$<br>28.6 | $1^{5}/_{8}$<br>41.3 | $^{11}/_{32}$<br>8.7 | $^{13}/_{32}$<br>10.3 | $1^{7}/_{16}$<br>36.5 | $^{3}/_{8}$ | 0.75<br>0.34 | 3 150<br>14 000 | 1 750<br>7 800 |
| 1 | CBF100ZM | 1<br>25.4 | $^{1}/_{2}$<br>12.7 | $4^{3}/_{4}$<br>120.7 | $1^{13}/_{16}$<br>46.0 | $2^{3}/_{4}$<br>69.9 | $1^{1}/_{8}$<br>28.6 | $1^{5}/_{8}$<br>41.3 | $^{11}/_{32}$<br>8.7 | $^{13}/_{32}$<br>10.3 | $1^{7}/_{16}$<br>36.5 | $^{3}/_{8}$ | 0.70<br>0.32 | 3 150<br>14 000 | 1 750<br>7 800 |
| $1^{1}/_{8}$ | CBF102ZM | $1^{1}/_{16}$<br>27.0 | $^{1}/_{2}$<br>12.7 | $5^{7}/_{16}$<br>138.1 | $2^{1}/_{16}$<br>52.4 | $3^{1}/_{4}$<br>82.6 | $1^{1}/_{4}$<br>31.8 | $1^{7}/_{8}$<br>47.6 | $^{25}/_{64}$<br>9.9 | $^{13}/_{32}$<br>10.3 | $1^{35}/_{64}$<br>39.3 | $^{3}/_{8}$ | 1.10<br>0.50 | 4 380<br>19 500 | 2 520<br>11 200 |
| $1^{3}/_{16}$ | CBF103ZM | $1^{1}/_{16}$<br>27.0 | $^{1}/_{2}$<br>12.7 | $5^{7}/_{16}$<br>138.1 | $2^{1}/_{16}$<br>52.4 | $3^{1}/_{4}$<br>82.6 | $1^{1}/_{4}$<br>31.8 | $1^{7}/_{8}$<br>47.6 | $^{25}/_{64}$<br>9.9 | $^{13}/_{32}$<br>10.3 | $1^{35}/_{64}$<br>39.3 | $^{3}/_{8}$ | 1.00<br>0.45 | 4 380<br>19 500 | 2 520<br>11 200 |
| $1^{1}/_{4}$ | CBF104ZMR | $1^{1}/_{16}$<br>27.0 | $^{1}/_{2}$<br>12.7 | $5^{7}/_{16}$<br>138.1 | $2^{1}/_{16}$<br>52.4 | $3^{1}/_{4}$<br>82.6 | $1^{1}/_{4}$<br>31.8 | $1^{7}/_{8}$<br>47.6 | $^{25}/_{64}$<br>9.9 | $^{13}/_{32}$<br>10.3 | $1^{35}/_{64}$<br>39.3 | $^{3}/_{8}$ | 1.00<br>0.45 | 4 380<br>19 500 | 2 520<br>11 200 |
| $1^{1}/_{4}$ | CBF104ZM | $1^{7}/_{32}$<br>31.0 | $^{9}/_{16}$<br>14.3 | $6^{3}/_{16}$<br>157.2 | $2^{3}/_{8}$<br>60.3 | $3^{13}/_{16}$<br>96.8 | $1^{1}/_{4}$<br>38.1 | 2<br>50.8 | $^{13}/_{32}$<br>10.4 | $^{17}/_{32}$<br>13.5 | $1^{13}/_{16}$<br>46.0 | $^{1}/_{2}$ | 1.50<br>0.68 | 5 730<br>25 500 | 3 440<br>15 300 |
| $1^{7}/_{16}$ | CBF107ZM | $1^{7}/_{32}$<br>31.0 | $^{9}/_{16}$<br>14.3 | $6^{3}/_{16}$<br>157.2 | $2^{3}/_{8}$<br>60.3 | $3^{3}/_{16}$<br>96.8 | $1^{1}/_{4}$<br>31.8 | 2<br>50.8 | $^{13}/_{32}$<br>10.4 | $^{17}/_{32}$<br>13.5 | $1^{13}/_{16}$<br>46.0 | $^{1}/_{2}$ | 1.34<br>0.61 | 5 730<br>25 500 | 3 440<br>15 300 |
| $1^{1}/_{2}$ | CBF108ZM | $1^{1}/_{4}$<br>31.8 | $^{9}/_{16}$<br>14.3 | $6^{11}/_{16}$<br>169.9 | $2^{9}/_{16}$<br>65.1 | $4^{1}/_{4}$<br>108.0 | $1^{3}/_{8}$<br>34.9 | $2^{1}/_{4}$<br>57.2 | $^{13}/_{32}$<br>10.4 | $^{17}/_{32}$<br>13.5 | $2^{1}/_{64}$<br>51.4 | $^{1}/_{2}$ | 1.90<br>0.86 | 6 900<br>30 700 | 4 270<br>19 000 |
| $1^{15}/_{16}$ | CBF115ZM[2] | $1^{1}/_{4}$<br>31.8 | $^{5}/_{8}$<br>15.9 | $7^{5}/_{8}$<br>193.7 | $2^{15}/_{16}$<br>74.6 | $4^{7}/_{8}$<br>123.8 | $1^{5}/_{8}$<br>15.9 | $2^{3}/_{4}$<br>69.9 | $^{13}/_{32}$<br>10.4 | $^{17}/_{32}$<br>13.5 | $2^{1}/_{8}$<br>54.0 | $^{1}/_{2}$ | 2.25<br>1.02 | 7 890<br>35 100 | 5 220<br>23 200 |

### For metric shafts 20mm - 40mm

| Shaft dia d | Flange unit designation | A | F | B | C | L | H | J | N | G | T | Bolt size | Mass | Basic radial load rating dynamic C† | static $C_0$† |
|---|---|---|---|---|---|---|---|---|---|---|---|---|---|---|---|
| mm | | in<br>mm | in<br>mm | in<br>mm | in<br>mm | in<br>mm | in<br>mm | in<br>mm | in<br>mm | in<br>mm | in<br>mm | in | lb<br>kg | lbf<br>N | lbf<br>N |
| 20 | CBF20ZM | $^{15}/_{16}$<br>23.8 | $^{7}/_{16}$<br>11.1 | $4^{11}/_{32}$<br>110.3 | $1^{11}/_{16}$<br>42.9 | $2^{9}/_{16}$<br>65.1 | $^{7}/_{8}$<br>22.2 | $1^{1}/_{2}$<br>38.1 | $^{11}/_{32}$<br>8.7 | $^{13}/_{32}$<br>10.3 | $1^{5}/_{16}$<br>33.3 | $^{3}/_{8}$ | 0.51<br>0.23 | 2 860<br>12 700 | 1 470<br>6 550 |
| 25 | CBF25ZM | 1<br>25.4 | $^{1}/_{2}$<br>12.7 | $4^{3}/_{4}$<br>120.7 | $1^{13}/_{16}$<br>46.0 | $2^{3}/_{4}$<br>69.9 | $1^{1}/_{8}$<br>28.6 | $1^{5}/_{8}$<br>41.3 | $^{11}/_{32}$<br>8.7 | $^{13}/_{32}$<br>10.3 | $1^{7}/_{16}$<br>36.5 | $^{3}/_{8}$ | 0.70<br>0.32 | 3 150<br>14 000 | 1 750<br>7 800 |
| 30 | CBF30ZM | $1^{1}/_{16}$<br>27.0 | $^{1}/_{2}$<br>12.7 | $5^{7}/_{16}$<br>138.1 | $2^{1}/_{16}$<br>52.4 | $3^{1}/_{4}$<br>82.6 | $1^{1}/_{4}$<br>31.8 | $1^{7}/_{8}$<br>47.6 | $^{25}/_{64}$<br>9.9 | $^{13}/_{32}$<br>10.3 | $1^{35}/_{64}$<br>39.3 | $^{3}/_{8}$ | 1.00<br>0.45 | 4 380<br>19 500 | 2 520<br>11 200 |
| 35 | CBF35ZM | $1^{7}/_{32}$<br>31.0 | $^{9}/_{16}$<br>14.3 | $6^{3}/_{16}$<br>157.2 | $2^{3}/_{8}$<br>60.3 | $3^{13}/_{16}$<br>96.8 | $1^{1}/_{4}$<br>31.8 | 2<br>50.8 | $^{13}/_{32}$<br>10.4 | $^{17}/_{32}$<br>13.5 | $1^{13}/_{16}$<br>46.0 | $^{1}/_{2}$ | 1.34<br>0.61 | 5 730<br>25 500 | 3 440<br>15 300 |
| 40 | CBF40ZM | $1^{1}/_{4}$<br>31.8 | $^{9}/_{16}$<br>14.3 | $6^{11}/_{16}$<br>169.9 | $2^{9}/_{16}$<br>65.1 | $4^{1}/_{4}$<br>108.0 | $1^{3}/_{8}$<br>34.9 | $2^{1}/_{4}$<br>57.2 | $^{13}/_{32}$<br>10.4 | $^{17}/_{32}$<br>13.5 | $2^{1}/_{64}$<br>51.4 | $^{1}/_{2}$ | 1.90<br>0.86 | 6 900<br>30 700 | 4 270<br>19 000 |



MRC Marathon series composite mounted bearing units are greased and sealed for life. MRC does not recommend regreasing.
If required, units with relubrication fittings are available for your application. Adding a "G" suffix to the part number denotes a regreasable unit.
Cast polymer housing. No steel coils.

[2] Check with MRC for availability

† Capacities listed are for the insert bearing only and do not reflect the capacity of the housing. If the application loads exceed 80% of the static capacity (Co), MRC Applications Engineering should be consulted for a design review.

## CBF composite three-bolt bracket flange units

Stainless steel insert bearing

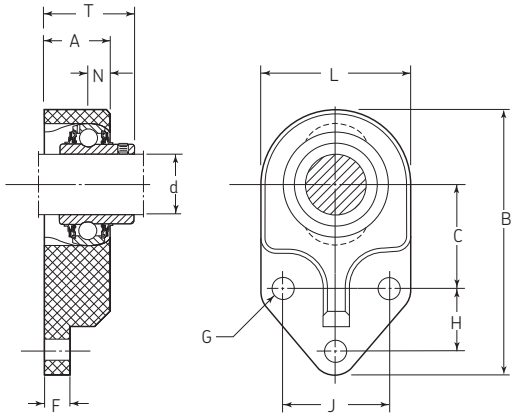


### For inch shafts $^{3}/_{4}$ – $1^{1}/_{2}$

| Shaft dia d | Flange unit designation | A | F | B | C | L | H | J | N | G | T | Bolt size | Mass | Basic radial load rating dynamic C† | static $C_0$† |
|---|---|---|---|---|---|---|---|---|---|---|---|---|---|---|---|
| in | | in<br>mm | in<br>mm | in<br>mm | in<br>mm | in<br>mm | in<br>mm | in<br>mm | in<br>mm | in<br>mm | in<br>mm | in | lb<br>kg | lbf<br>N | lbf<br>N |
| $^{3}/_{4}$ | CBF012SS | $^{15}/_{16}$<br>23.8 | $^{7}/_{16}$<br>11.1 | $4^{11}/_{32}$<br>110.3 | $1^{11}/_{16}$<br>42.9 | $2^{9}/_{16}$<br>65.1 | $^{7}/_{8}$<br>22.2 | $1^{1}/_{2}$<br>38.1 | $^{11}/_{32}$<br>8.7 | $^{13}/_{32}$<br>10.3 | $1^{5}/_{16}$<br>33.3 | $^{3}/_{8}$ | 0.51<br>0.23 | 2 430<br>10 800 | 1 470<br>6 550 |
| 1 | CBF100SS | 1<br>25.4 | $^{1}/_{2}$<br>12.7 | $4^{3}/_{4}$<br>120.7 | $1^{13}/_{16}$<br>46.0 | $2^{3}/_{4}$<br>69.9 | $1^{1}/_{8}$<br>28.6 | $1^{5}/_{8}$<br>41.3 | $^{11}/_{32}$<br>8.7 | $^{13}/_{32}$<br>10.3 | $1^{7}/_{16}$<br>36.5 | $^{3}/_{8}$ | 0.70<br>0.32 | 2 670<br>11 900 | 1 750<br>7 800 |
| $1^{3}/_{16}$ | CBF103SS | $1^{1}/_{16}$<br>27.0 | $^{1}/_{2}$<br>12.7 | $5^{7}/_{16}$<br>138.1 | $2^{1}/_{16}$<br>52.4 | $3^{1}/_{4}$<br>82.6 | $1^{1}/_{4}$<br>31.8 | $1^{7}/_{8}$<br>47.6 | $^{25}/_{64}$<br>9.9 | $^{13}/_{32}$<br>10.3 | $1^{35}/_{64}$<br>39.3 | $^{3}/_{8}$ | 1.00<br>0.45 | 3 660<br>16 300 | 2 520<br>11 200 |
| $1^{1}/_{4}$ | CBF104SSR | $1^{1}/_{16}$<br>27.0 | $^{1}/_{2}$<br>12.7 | $5^{7}/_{16}$<br>138.1 | $2^{1}/_{16}$<br>52.4 | $3^{1}/_{4}$<br>82.6 | $1^{1}/_{4}$<br>31.8 | $1^{7}/_{8}$<br>47.6 | $^{25}/_{64}$<br>9.9 | $^{13}/_{32}$<br>10.3 | $1^{43}/_{64}$<br>42.5 | $^{3}/_{8}$ | 1.30<br>0.59 | 3 660<br>16 300 | 2 520<br>11 200 |
| $1^{1}/_{4}$ | CBF104SS | $1^{7}/_{32}$<br>31.0 | $^{9}/_{16}$<br>14.3 | $6^{3}/_{16}$<br>157.2 | $2^{3}/_{8}$<br>60.3 | $3^{13}/_{16}$<br>96.8 | $1^{1}/_{4}$<br>31.8 | 2<br>50.8 | $^{13}/_{32}$<br>10.4 | $^{17}/_{32}$<br>13.5 | $1^{13}/_{16}$<br>46.0 | $^{1}/_{2}$ | 1.50<br>0.68 | 4 850<br>21 600 | 3 440<br>15 300 |
| $1^{3}/_{8}$ | CBF106SS | $1^{7}/_{32}$<br>31.0 | $^{9}/_{16}$<br>14.3 | $6^{3}/_{16}$<br>157.2 | $2^{3}/_{8}$<br>60.3 | $3^{13}/_{16}$<br>96.8 | $1^{1}/_{4}$<br>31.8 | 2<br>50.8 | $^{13}/_{32}$<br>10.4 | $^{17}/_{32}$<br>13.5 | $1^{13}/_{16}$<br>46.0 | $^{1}/_{2}$ | 1.40<br>0.63 | 4 850<br>21 600 | 3 440<br>15 300 |
| $1^{7}/_{16}$ | CBF107SS | $1^{7}/_{32}$<br>31.0 | $^{9}/_{16}$<br>14.3 | $6^{3}/_{16}$<br>157.2 | $2^{3}/_{8}$<br>60.3 | $3^{13}/_{16}$<br>96.8 | $1^{1}/_{4}$<br>31.8 | 2<br>50.8 | $^{13}/_{32}$<br>10.4 | $^{17}/_{32}$<br>13.5 | $1^{13}/_{16}$<br>46.0 | $^{1}/_{2}$ | 1.34<br>0.61 | 4 850<br>21 600 | 3 440<br>15 300 |
| $1^{1}/_{2}$ | CBF108SS | $1^{1}/_{4}$<br>31.8 | $^{9}/_{16}$<br>14.3 | $6^{11}/_{16}$<br>169.9 | $2^{9}/_{16}$<br>65.1 | $4^{1}/_{4}$<br>108.0 | $1^{3}/_{8}$<br>34.9 | $2^{1}/_{4}$<br>57.2 | $^{13}/_{32}$<br>10.4 | $^{17}/_{32}$<br>13.5 | $2^{1}/_{64}$<br>51.4 | $^{1}/_{2}$ | 1.90<br>0.86 | 5 550<br>24 700 | 4 270<br>19 000 |

### For metric shafts 20mm - 40mm

| Shaft dia d | Flange unit designation | A | F | B | C | L | H | J | N | G | T | Bolt size | Mass | Basic radial load rating dynamic C† | static $C_0$† |
|---|---|---|---|---|---|---|---|---|---|---|---|---|---|---|---|
| mm | | in<br>mm | in<br>mm | in<br>mm | in<br>mm | in<br>mm | in<br>mm | in<br>mm | in<br>mm | in<br>mm | in<br>mm | in | lb<br>kg | lbf<br>N | lbf<br>N |
| 20 | CBF20SS | $^{15}/_{16}$<br>23.8 | $^{7}/_{16}$<br>11.1 | $4^{11}/_{32}$<br>110.3 | $1^{11}/_{16}$<br>42.9 | $2^{9}/_{16}$<br>65.1 | $^{7}/_{8}$<br>22.2 | $1^{1}/_{2}$<br>38.1 | $^{11}/_{32}$<br>8.7 | $^{13}/_{32}$<br>10.3 | $1^{5}/_{16}$<br>33.3 | $^{3}/_{8}$ | 0.51<br>0.23 | 2 430<br>10 800 | 1 470<br>6 550 |
| 25 | CBF25SS | 1<br>25.4 | $^{1}/_{2}$<br>12.7 | $4^{3}/_{4}$<br>120.7 | $1^{13}/_{16}$<br>46.0 | $2^{3}/_{4}$<br>69.9 | $1^{1}/_{8}$<br>28.6 | $1^{5}/_{8}$<br>41.3 | $^{11}/_{32}$<br>8.7 | $^{13}/_{32}$<br>10.3 | $1^{7}/_{16}$<br>36.5 | $^{3}/_{8}$ | 0.70<br>0.32 | 2 670<br>11 900 | 1 750<br>7 800 |
| 30 | CBF30SS | $1^{1}/_{16}$<br>27.0 | $^{1}/_{2}$<br>12.7 | $5^{7}/_{16}$<br>138.1 | $2^{1}/_{16}$<br>52.4 | $3^{1}/_{4}$<br>82.6 | $1^{1}/_{4}$<br>31.8 | $1^{7}/_{8}$<br>47.6 | $^{25}/_{64}$<br>9.9 | $^{13}/_{32}$<br>10.3 | $1^{35}/_{64}$<br>39.3 | $^{3}/_{8}$ | 1.00<br>0.45 | 3 660<br>16 300 | 2 520<br>11 200 |
| 35 | CBF35SS | $1^{7}/_{32}$<br>31.0 | $^{9}/_{16}$<br>14.3 | $6^{3}/_{16}$<br>157.2 | $2^{3}/_{8}$<br>60.3 | $3^{13}/_{16}$<br>96.8 | $1^{1}/_{4}$<br>31.8 | 2<br>50.8 | $^{13}/_{32}$<br>10.4 | $^{17}/_{32}$<br>13.5 | $1^{13}/_{16}$<br>46.0 | $^{1}/_{2}$ | 1.34<br>0.61 | 4 850<br>21 600 | 3 440<br>15 300 |
| 40 | CBF40SS | $1^{1}/_{4}$<br>31.8 | $^{9}/_{16}$<br>14.3 | $6^{11}/_{16}$<br>169.9 | $2^{9}/_{16}$<br>65.1 | $4^{1}/_{4}$<br>108.0 | $1^{3}/_{8}$<br>34.9 | $2^{1}/_{4}$<br>57.2 | $^{13}/_{32}$<br>10.4 | $^{17}/_{32}$<br>13.5 | $2^{1}/_{64}$<br>51.4 | $^{1}/_{2}$ | 1.90<br>0.86 | 5 550<br>24 700 | 4 270<br>19 000 |



MRC Marathon series composite mounted bearing units are greased and sealed for life. MRC does not recommend regreasing.
If required, units with relubrication fittings are available for your application. Adding a "G" suffix to the part number denotes a regreasable unit.
Cast polymer housing. No steel coils.

† Capacities listed are for the insert bearing only and do not reflect the capacity of the housing. If the application loads exceed 80% of the static capacity (Co), MRC Applications Engineering should be consulted for a design review.

## CTN composite narrow slot take-up units

ZMaRC-coated insert bearing

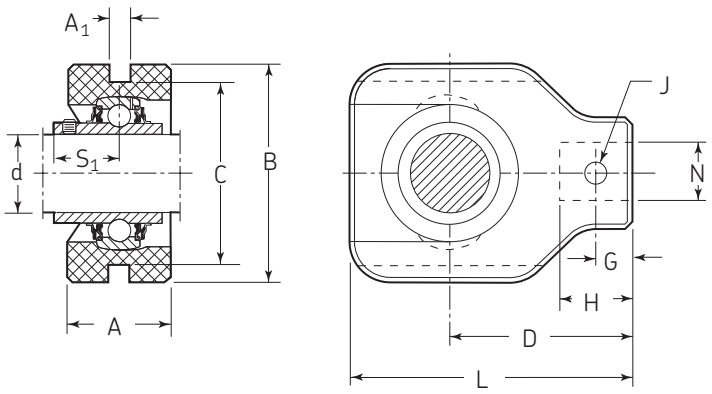


### For inch shafts $^{3}/_{4}$ – $1^{15}/_{16}$

| Shaft dia d | Take-up unit designation | A | B | C | L | D | H | G | $A_1$ | Pin dia J | N | $S_1$ | Mass | Basic radial load rating dynamic C† | static $C_0$† |
|---|---|---|---|---|---|---|---|---|---|---|---|---|---|---|---|
| in | | in<br>mm | in<br>mm | in<br>mm | in<br>mm | in<br>mm | in<br>mm | in<br>mm | in<br>mm | in<br>mm | in<br>mm | in<br>mm | lb<br>kg | lbf<br>N | lbf<br>N |
| $^{3}/_{4}$ | CTN012ZM | $1^{3}/_{8}$<br>34.9 | $3^{1}/_{8}$<br>79.4 | $2^{5}/_{8}$<br>66.7 | $3^{7}/_{16}$<br>87.3 | $2^{3}/_{16}$<br>55.5 | $^{7}/_{8}$<br>22.2 | $^{7}/_{16}$<br>11.1 | $^{1}/_{4}$<br>6.4 | $^{5}/_{16}$<br>7.9 | $^{25}/_{32}$<br>19.8 | $^{23}/_{32}$<br>18.3 | 0.70<br>0.32 | 2 860<br>12 700 | 1 470<br>6 550 |
| $^{15}/_{16}$ | CTN015ZM[2] | $1^{3}/_{8}$<br>34.9 | $3^{1}/_{8}$<br>79.4 | $2^{5}/_{8}$<br>66.7 | $3^{9}/_{16}$<br>90.5 | $2^{3}/_{16}$<br>55.5 | $^{7}/_{8}$<br>22.2 | $^{7}/_{16}$<br>11.1 | $^{1}/_{4}$<br>6.4 | $^{5}/_{16}$<br>7.9 | $^{25}/_{32}$<br>19.8 | $^{25}/_{32}$<br>19.8 | 0.75<br>0.34 | 3 150<br>14 000 | 1 750<br>7 800 |
| 1 | CTN100ZM | $1^{3}/_{8}$<br>34.9 | $3^{1}/_{8}$<br>79.4 | $2^{5}/_{8}$<br>66.7 | $3^{9}/_{16}$<br>90.5 | $2^{3}/_{16}$<br>55.5 | $^{7}/_{8}$<br>22.2 | $^{7}/_{16}$<br>11.1 | $^{1}/_{4}$<br>6.4 | $^{5}/_{16}$<br>7.9 | $^{25}/_{32}$<br>19.8 | $^{25}/_{32}$<br>19.8 | 0.70<br>0.32 | 3 150<br>14 000 | 1 750<br>7 800 |
| $1^{1}/_{8}$ | CTN102ZM | $1^{3}/_{8}$<br>34.9 | $4^{1}/_{8}$<br>104.8 | $3^{1}/_{2}$<br>88.9 | $4^{5}/_{16}$<br>109.5 | $2^{11}/_{16}$<br>68.3 | 1<br>25.4 | $^{1}/_{2}$<br>12.7 | $^{1}/_{4}$<br>6.4 | $^{5}/_{16}$<br>7.9 | $^{25}/_{32}$<br>19.8 | $^{7}/_{8}$<br>22.2 | 1.20<br>0.54 | 4 380<br>19 500 | 2 520<br>11 200 |
| $1^{3}/_{16}$ | CTN103ZM | $1^{3}/_{8}$<br>34.9 | $4^{1}/_{8}$<br>104.8 | $3^{1}/_{2}$<br>88.9 | $4^{5}/_{16}$<br>109.5 | $2^{11}/_{16}$<br>68.3 | 1<br>25.4 | $^{1}/_{2}$<br>12.7 | $^{1}/_{4}$<br>6.4 | $^{5}/_{16}$<br>7.9 | $^{25}/_{32}$<br>19.8 | $^{7}/_{8}$<br>22.2 | 1.10<br>0.50 | 4 380<br>19 500 | 2 520<br>11 200 |
| $1^{1}/_{4}$ | CTN104ZMR | $1^{3}/_{8}$<br>34.9 | $4^{1}/_{8}$<br>104.8 | $3^{1}/_{2}$<br>88.9 | $4^{5}/_{16}$<br>109.5 | $2^{11}/_{16}$<br>68.3 | 1<br>25.4 | $^{1}/_{2}$<br>12.7 | $^{1}/_{4}$<br>6.4 | $^{5}/_{16}$<br>7.9 | $^{25}/_{32}$<br>19.8 | $^{7}/_{8}$<br>22.2 | 1.10<br>0.50 | 4 380<br>19 500 | 2 520<br>11 200 |
| $1^{1}/_{4}$ | CTN104ZM | $1^{3}/_{8}$<br>34.9 | $4^{1}/_{8}$<br>104.8 | $3^{1}/_{2}$<br>88.9 | $4^{1}/_{2}$<br>114.3 | $2^{11}/_{16}$<br>68.3 | 1<br>25.4 | $^{1}/_{2}$<br>12.7 | $^{1}/_{4}$<br>6.4 | $^{5}/_{16}$<br>7.9 | $^{25}/_{32}$<br>19.8 | 1<br>25.4 | 1.60<br>0.73 | 5 730<br>25 500 | 3 440<br>15 300 |
| $1^{7}/_{16}$ | CTN107ZM | $1^{3}/_{8}$<br>34.9 | $4^{1}/_{8}$<br>104.8 | $3^{1}/_{2}$<br>88.9 | $4^{1}/_{2}$<br>114.3 | $2^{11}/_{16}$<br>68.3 | 1<br>25.4 | $^{1}/_{2}$<br>12.7 | $^{1}/_{4}$<br>6.4 | $^{5}/_{16}$<br>7.9 | $^{25}/_{32}$<br>19.8 | 1<br>25.4 | 1.60<br>0.73 | 5 730<br>25500 | 3 440<br>15 300 |
| $1^{1}/_{2}$ | CTN108ZM | $1^{5}/_{8}$<br>41.3 | $4^{3}/_{4}$<br>120.7 | 4<br>101.6 | $5^{3}/_{8}$<br>136.5 | $3^{1}/_{4}$<br>82.6 | $1^{5}/_{32}$<br>29.4 | $^{21}/_{32}$<br>16.7 | $^{5}/_{16}$<br>7.9 | $^{3}/_{8}$<br>9.5 | $^{25}/_{32}$<br>19.8 | $1^{3}/_{16}$<br>30 | 2.30<br>1.00 | 6 900<br>30 700 | 4 270<br>19 000 |
| $1^{15}/_{16}$ | CTN115ZM | $1^{5}/_{8}$<br>41.3 | $4^{3}/_{4}$<br>120.7 | 4<br>101.6 | $5^{1}/_{2}$<br>139.7 | $3^{1}/_{4}$<br>82.6 | $1^{5}/_{32}$<br>29.4 | $^{21}/_{32}$<br>16.7 | $^{5}/_{16}$<br>7.9 | $^{3}/_{8}$<br>9.5 | $^{29}/_{32}$<br>23.0 | $1^{9}/_{32}$<br>32.6 | 2.55<br>1.16 | 7 890<br>35 100 | 5 220<br>23 200 |

### For metric shafts 20mm - 40mm

| Shaft dia d | Take-up unit designation | A | B | C | L | D | H | G | $A_1$ | Pin dia J | N | $S_1$ | Mass | Basic radial load rating dynamic C† | static $C_0$† |
|---|---|---|---|---|---|---|---|---|---|---|---|---|---|---|---|
| mm | | in<br>mm | in<br>mm | in<br>mm | in<br>mm | in<br>mm | in<br>mm | in<br>mm | in<br>mm | in<br>mm | in<br>mm | in<br>mm | lb<br>kg | lbf<br>N | lbf<br>N |
| 20 | CTN20ZM | $1^{3}/_{8}$<br>34.9 | $3^{1}/_{8}$<br>79.4 | $2^{5}/_{8}$<br>66.7 | $3^{7}/_{16}$<br>87.3 | $2^{3}/_{16}$<br>55.5 | $^{7}/_{8}$<br>22.2 | $^{7}/_{16}$<br>11.1 | $^{1}/_{4}$<br>6.4 | $^{5}/_{16}$<br>7.9 | $^{25}/_{32}$<br>19.8 | $^{23}/_{32}$<br>18.3 | 0.70<br>0.32 | 2 860<br>12 700 | 1 470<br>6 550 |
| 25 | CTN25ZM | $1^{3}/_{8}$<br>34.9 | $3^{1}/_{8}$<br>79.4 | $2^{5}/_{8}$<br>66.7 | $3^{9}/_{16}$<br>90.5 | $2^{3}/_{16}$<br>55.5 | $^{7}/_{8}$<br>22.2 | $^{7}/_{16}$<br>11.1 | $^{1}/_{4}$<br>6.4 | $^{5}/_{16}$<br>7.9 | $^{25}/_{32}$<br>19.8 | $^{25}/_{32}$<br>19.8 | 0.70<br>0.32 | 3 150<br>14 000 | 1 750<br>7 800 |
| 30 | CTN30ZM | $1^{3}/_{8}$<br>34.9 | $4^{1}/_{8}$<br>104.8 | $3^{1}/_{2}$<br>88.9 | $4^{5}/_{16}$<br>109.5 | $2^{11}/_{16}$<br>68.3 | 1<br>25.4 | $^{1}/_{2}$<br>12.7 | $^{1}/_{4}$<br>6.4 | $^{5}/_{16}$<br>7.9 | $^{25}/_{32}$<br>19.8 | $^{7}/_{8}$<br>22.2 | 1.10<br>0.50 | 4 380<br>19 500 | 2 520<br>11 200 |
| 35 | CTN35ZM | $1^{3}/_{8}$<br>34.9 | $4^{1}/_{8}$<br>104.8 | $3^{1}/_{2}$<br>88.9 | $4^{1}/_{2}$<br>114.3 | $2^{11}/_{16}$<br>68.3 | 1<br>25.4 | $^{1}/_{2}$<br>12.7 | $^{1}/_{4}$<br>6.4 | $^{5}/_{16}$<br>7.9 | $^{25}/_{32}$<br>19.8 | 1<br>25.4 | 1.60<br>0.73 | 5 730<br>25 500 | 3 440<br>15 300 |
| 40 | CTN40ZM | $1^{5}/_{8}$<br>41.3 | $4^{3}/_{4}$<br>120.7 | 4<br>101.6 | $5^{3}/_{8}$<br>136.5 | $3^{1}/_{4}$<br>82.6 | $1^{5}/_{32}$<br>29.4 | $^{21}/_{32}$<br>16.7 | $^{5}/_{16}$<br>7.9 | $^{3}/_{8}$<br>9.5 | $^{25}/_{32}$<br>19.8 | $^{13}/_{16}$<br>30.0 | 2.30<br>1.00 | 6 900<br>30 700 | 4 270<br>19 000 |



MRC Marathon series composite mounted bearing units are greased and sealed for life. MRC does not recommend regreasing.
If required, units with relubrication fittings are available for your application. Adding a "G" suffix to the part number denotes a regreasable unit.
Cast polymer housing. No steel coils.

[2] Check with MRC for availability

† Capacities listed are for the insert bearing only and do not reflect the capacity of the housing. If the application loads exceed 80% of the static capacity (Co), MRC Applications Engineering should be consulted for a design review.

## CTN composite narrow slot take-up units

Stainless steel insert bearing

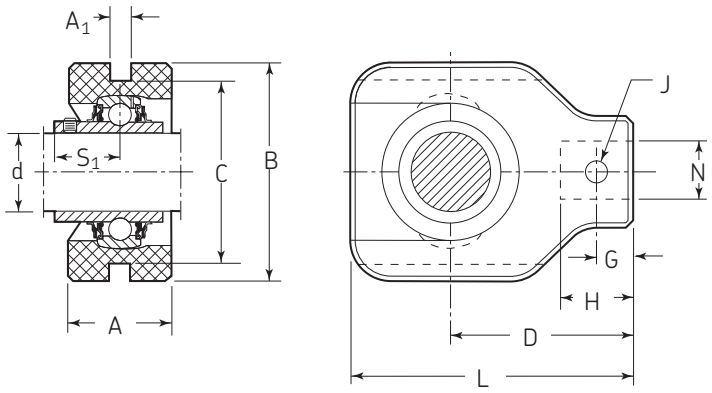


### For inch shafts $^{3}/_{4}$ – $1^{1}/_{2}$

| Shaft dia d | Take-up unit designation | A | B | C | L | D | H | G | $A_1$ | Pin dia J | N | $S_1$ | Mass | Basic radial load rating dynamic C† | static $C_0$† |
|---|---|---|---|---|---|---|---|---|---|---|---|---|---|---|---|
| in | | in<br>mm | in<br>mm | in<br>mm | in<br>mm | in<br>mm | in<br>mm | in<br>mm | in<br>mm | in<br>mm | in<br>mm | in<br>mm | lb<br>kg | lbf<br>N | lbf<br>N |
| $^{3}/_{4}$ | CTN012SS | $1^{3}/_{8}$<br>34.9 | $3^{1}/_{8}$<br>79.4 | $2^{5}/_{8}$<br>66.7 | $3^{7}/_{16}$<br>87.3 | $2^{3}/_{16}$<br>55.5 | $^{7}/_{8}$<br>22.2 | $^{7}/_{16}$<br>11.1 | $^{1}/_{4}$<br>6.4 | $^{5}/_{16}$<br>7.9 | $^{25}/_{32}$<br>19.8 | $^{23}/_{32}$<br>18.3 | 0.70<br>0.32 | 2 430<br>10 800 | 1 470<br>6 550 |
| 1 | CTN100SS | $1^{3}/_{8}$<br>34.9 | $3^{1}/_{8}$<br>79.4 | $2^{5}/_{8}$<br>66.7 | $3^{9}/_{16}$<br>90.5 | $2^{3}/_{16}$<br>55.5 | $^{7}/_{8}$<br>22.2 | $^{7}/_{16}$<br>11.1 | $^{1}/_{4}$<br>6.4 | $^{5}/_{16}$<br>7.9 | $^{25}/_{32}$<br>19.8 | $^{25}/_{32}$<br>19.8 | 0.70<br>0.32 | 2 670<br>11 900 | 1 750<br>7 800 |
| $1^{3}/_{16}$ | CTN103SS | $1^{3}/_{8}$<br>34.9 | $4^{1}/_{8}$<br>104.8 | $3^{1}/_{2}$<br>88.9 | $4^{5}/_{16}$<br>109.5 | $2^{11}/_{16}$<br>68.3 | 1<br>25.4 | $^{1}/_{2}$<br>12.7 | $^{1}/_{4}$<br>6.4 | $^{5}/_{16}$<br>7.9 | $^{25}/_{32}$<br>19.8 | $^{7}/_{8}$<br>22.2 | 1.10<br>0.50 | 3 660<br>16 300 | 2 520<br>11 200 |
| $1^{1}/_{4}$ | CTN104SSR | $1^{3}/_{8}$<br>34.9 | $4^{1}/_{8}$<br>104.8 | $3^{1}/_{2}$<br>88.9 | $4^{5}/_{16}$<br>109.5 | $2^{11}/_{16}$<br>68.3 | 1<br>25.4 | $^{1}/_{2}$<br>12.7 | $^{1}/_{4}$<br>6.4 | $^{5}/_{16}$<br>7.9 | $^{25}/_{32}$<br>19.8 | 1<br>25.4 | 1.40<br>0.63 | 3 660<br>16 300 | 2 520<br>11 200 |
| $1^{1}/_{4}$ | CTN104SS | $1^{3}/_{8}$<br>34.9 | $4^{1}/_{8}$<br>104.8 | $3^{1}/_{2}$<br>88.9 | $4^{1}/_{2}$<br>114.3 | $2^{11}/_{16}$<br>68.3 | 1<br>25.4 | $^{1}/_{2}$<br>12.7 | $^{1}/_{4}$<br>6.4 | $^{5}/_{16}$<br>7.9 | $^{25}/_{32}$<br>19.8 | $^{7}/_{8}$<br>22.2 | 1.60<br>0.73 | 4 850<br>21 600 | 3 440<br>15 300 |
| $1^{3}/_{8}$ | CTN106SS | $1^{3}/_{8}$<br>34.9 | $4^{1}/_{8}$<br>104.8 | $3^{1}/_{2}$<br>88.9 | $4^{1}/_{2}$<br>114.3 | $2^{11}/_{16}$<br>68.3 | 1<br>25.4 | $^{1}/_{2}$<br>12.7 | $^{1}/_{4}$<br>6.4 | $^{5}/_{16}$<br>7.9 | $^{25}/_{32}$<br>19.8 | 1<br>25.4 | 1.60<br>0.73 | 4 850<br>21 600 | 3 440<br>15 300 |
| $1^{7}/_{16}$ | CTN107SS | $1^{3}/_{8}$<br>34.9 | $4^{1}/_{8}$<br>104.8 | $3^{1}/_{2}$<br>88.9 | $4^{1}/_{2}$<br>114.3 | $2^{11}/_{16}$<br>68.3 | 1<br>25.4 | $^{1}/_{2}$<br>12.7 | $^{1}/_{4}$<br>6.4 | $^{5}/_{16}$<br>7.9 | $^{25}/_{32}$<br>19.8 | 1<br>25.4 | 1.60<br>0.73 | 4 850<br>21 600 | 3 440<br>15 300 |
| $1^{1}/_{2}$ | CTN108SS | $1^{5}/_{8}$<br>41.3 | $4^{3}/_{4}$<br>120.7 | 4<br>101.6 | $5^{3}/_{8}$<br>136.5 | $3^{1}/_{4}$<br>82.6 | $1^{5}/_{32}$<br>29.4 | $^{21}/_{32}$<br>16.7 | $^{5}/_{16}$<br>7.9 | $^{3}/_{8}$<br>9.5 | $^{25}/_{32}$<br>19.8 | $1^{3}/_{16}$<br>30.0 | 2.30<br>1.00 | 5 550<br>24 700 | 4 270<br>19 000 |

### For metric shafts 20mm - 40mm

| Shaft dia d | Take-up unit designation | A | B | C | L | D | H | G | $A_1$ | Pin dia J | N | $S_1$ | Mass | Basic radial load rating dynamic C† | static $C_0$† |
|---|---|---|---|---|---|---|---|---|---|---|---|---|---|---|---|
| mm | | in<br>mm | in<br>mm | in<br>mm | in<br>mm | in<br>mm | in<br>mm | in<br>mm | in<br>mm | in<br>mm | in<br>mm | in<br>mm | lb<br>kg | lbf<br>N | lbf<br>N |
| 20 | CTN20SS | $1^{3}/_{8}$<br>34.9 | $3^{1}/_{8}$<br>79.4 | $2^{5}/_{8}$<br>66.7 | $3^{7}/_{16}$<br>87.3 | $2^{3}/_{16}$<br>55.5 | $^{7}/_{8}$<br>22.2 | $^{7}/_{16}$<br>11.1 | $^{1}/_{4}$<br>6.4 | $^{5}/_{16}$<br>7.9 | $^{25}/_{32}$<br>19.8 | $^{23}/_{32}$<br>18.3 | 0.70<br>0.32 | 2 430<br>10 800 | 1 470<br>6 550 |
| 25 | CTN25SS | $1^{3}/_{8}$<br>34.9 | $3^{1}/_{8}$<br>79.4 | $2^{5}/_{8}$<br>66.7 | $3^{9}/_{16}$<br>90.5 | $2^{3}/_{16}$<br>55.5 | $^{7}/_{8}$<br>22.2 | $^{7}/_{16}$<br>11.1 | $^{1}/_{4}$<br>6.4 | $^{5}/_{16}$<br>7.9 | $^{25}/_{32}$<br>19.8 | $^{25}/_{32}$<br>19.8 | 0.70<br>0.32 | 2 670<br>11 900 | 1 750<br>7 800 |
| 30 | CTN30SS | $1^{3}/_{8}$<br>34.9 | $4^{1}/_{8}$<br>104.8 | $3^{1}/_{2}$<br>88.9 | $4^{5}/_{16}$<br>109.5 | $2^{11}/_{16}$<br>68.3 | 1<br>25.4 | $^{1}/_{2}$<br>12.7 | $^{1}/_{4}$<br>6.4 | $^{5}/_{16}$<br>7.9 | $^{25}/_{32}$<br>19.8 | $^{7}/_{8}$<br>22.2 | 1.10<br>0.50 | 3 660<br>16 300 | 2 520<br>11 200 |
| 35 | CTN35SS | $1^{3}/_{8}$<br>34.9 | $4^{1}/_{8}$<br>104.8 | $3^{1}/_{2}$<br>88.9 | $4^{1}/_{2}$<br>114.3 | $2^{11}/_{16}$<br>68.3 | 1<br>25.4 | $^{1}/_{2}$<br>12.7 | $^{1}/_{4}$<br>6.4 | $^{5}/_{16}$<br>7.9 | $^{25}/_{32}$<br>19.8 | 1<br>25.4 | 1.60<br>0.73 | 4 850<br>21 600 | 3 440<br>15 300 |
| 40 | CTN40SS | $1^{5}/_{8}$<br>41.3 | $4^{3}/_{4}$<br>120.7 | 4<br>101.6 | $5^{3}/_{8}$<br>136.5 | $3^{1}/_{4}$<br>82.6 | $1^{5}/_{32}$<br>29.4 | $^{21}/_{32}$<br>16.7 | $^{5}/_{16}$<br>7.9 | $^{3}/_{8}$<br>9.5 | $^{25}/_{32}$<br>19.8 | $1^{3}/_{16}$<br>30.0 | 2.30<br>1.00 | 5 550<br>24 700 | 4 270<br>19 000 |



MRC Marathon series composite mounted bearing units are greased and sealed for life. MRC does not recommend regreasing.
If required, units with relubrication fittings are available for your application. Adding a "G" suffix to the part number denotes a regreasable unit.
Cast polymer housing. No steel coils.

† Capacities listed are for the insert bearing only and do not reflect the capacity of the housing. If the application loads exceed 80% of the static capacity (Co), MRC Applications Engineering should be consulted for a design review.

## CTW composite wide slot take-up units

ZMaRC-coated insert bearing

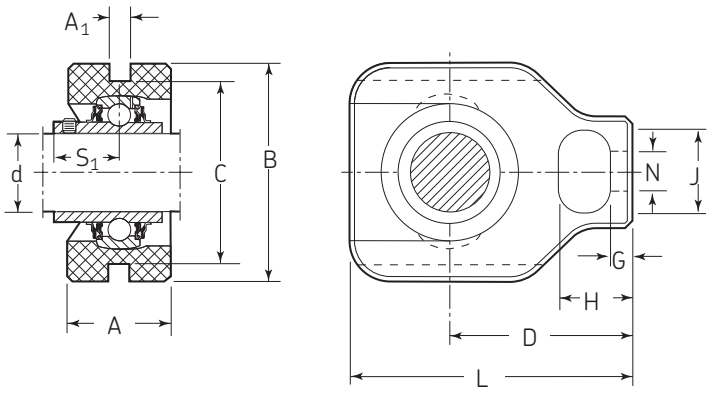


### For inch shafts $^{3}/_{4}$ – $1^{15}/_{16}$

| Shaft dia d | Take-up unit designation | A | B | C | L | D | H | G | $A_1$ | J | N | $S_1$ | Mass | Basic radial load rating dynamic C† | static $C_0$† |
|---|---|---|---|---|---|---|---|---|---|---|---|---|---|---|---|
| in | | in<br>mm | in<br>mm | in<br>mm | in<br>mm | in<br>mm | in<br>mm | in<br>mm | in<br>mm | in<br>mm | in<br>mm | in<br>mm | lb<br>kg | lbf<br>N | lbf<br>N |
| $^{3}/_{4}$ | CTW012ZM | $1^{3}/_{8}$<br>34.9 | $3^{5}/_{8}$<br>92.1 | 3<br>76.2 | $3^{11}/_{16}$<br>93.7 | $2^{3}/_{8}$<br>60.3 | $1^{1}/_{16}$<br>27.0 | $^{7}/_{16}$<br>11.1 | $^{17}/_{32}$<br>13.5 | $1^{7}/_{16}$<br>36.5 | $^{21}/_{32}$<br>16.7 | $^{23}/_{32}$<br>18.3 | 0.81<br>0.37 | 2 860<br>12 700 | 1 470<br>6 500 |
| $^{15}/_{16}$ | CTW015ZM[2] | $1^{3}/_{8}$<br>34.9 | $3^{5}/_{8}$<br>92.1 | 3<br>76.2 | $3^{13}/_{16}$<br>96.8 | $2^{7}/_{16}$<br>61.9 | $1^{1}/_{16}$<br>27.0 | $^{7}/_{16}$<br>11.1 | $^{17}/_{32}$<br>13.5 | $1^{7}/_{16}$<br>36.5 | $^{21}/_{32}$<br>16.7 | $^{25}/_{32}$<br>19.8 | 0.92<br>0.41 | 3 150<br>14 000 | 1 750<br>7 800 |
| 1 | CTW100ZM | $1^{3}/_{8}$<br>34.9 | $3^{5}/_{8}$<br>92.1 | 3<br>76.2 | $3^{13}/_{16}$<br>96.8 | $2^{7}/_{16}$<br>61.9 | $1^{1}/_{16}$<br>27.0 | $^{7}/_{16}$<br>11.1 | $^{17}/_{32}$<br>13.5 | $1^{7}/_{16}$<br>36.5 | $^{21}/_{32}$<br>16.7 | $^{25}/_{32}$<br>19.8 | 0.87<br>0.39 | 3 150<br>14 000 | 1 750<br>7 800 |
| $1^{1}/_{8}$ | CTW102ZM | $1^{5}/_{8}$<br>41.3 | $4^{1}/_{8}$<br>104.8 | $3^{1}/_{2}$<br>88.9 | $4^{3}/_{8}$<br>111.1 | $2^{3}/_{4}$<br>69.9 | $1^{5}/_{32}$<br>29.4 | $^{3}/_{8}$<br>9.5 | $^{17}/_{32}$<br>13.5 | $1^{5}/_{8}$<br>41.3 | $^{25}/_{32}$<br>19.8 | $^{7}/_{8}$<br>22.2 | 1.10<br>0.50 | 4 380<br>19 500 | 2 520<br>11 200 |
| $1^{3}/_{16}$ | CTW103ZM | $1^{5}/_{8}$<br>41.3 | $4^{1}/_{8}$<br>104.8 | $3^{1}/_{2}$<br>88.9 | $4^{3}/_{8}$<br>111.1 | $2^{3}/_{4}$<br>69.9 | $1^{5}/_{32}$<br>29.4 | $^{3}/_{8}$<br>9.5 | $^{17}/_{32}$<br>13.5 | $1^{5}/_{8}$<br>41.3 | $^{25}/_{32}$<br>19.8 | $^{7}/_{8}$<br>22.2 | 1.40<br>0.64 | 4 380<br>19 500 | 2 520<br>11 200 |
| $1^{1}/_{4}$ | CTW104ZMR | $1^{5}/_{8}$<br>41.3 | $4^{1}/_{8}$<br>104.8 | $3^{1}/_{2}$<br>88.9 | $4^{3}/_{8}$<br>111.1 | $2^{3}/_{4}$<br>69.9 | $1^{5}/_{32}$<br>29.4 | $^{3}/_{8}$<br>9.5 | $^{17}/_{32}$<br>13.5 | $1^{5}/_{8}$<br>41.3 | $^{25}/_{32}$<br>19.8 | 1<br>25.4 | 1.40<br>0.64 | 4 380<br>19 500 | 2 520<br>11 200 |
| $1^{1}/_{4}$ | CTW104ZM | $1^{5}/_{8}$<br>41.3 | $4^{1}/_{8}$<br>104.8 | $3^{1}/_{2}$<br>88.9 | $4^{13}/_{16}$<br>122.2 | 3<br>76.2 | $1^{5}/_{32}$<br>29.4 | $^{3}/_{8}$<br>9.5 | $^{17}/_{32}$<br>13.5 | $1^{5}/_{8}$<br>41.3 | $^{25}/_{32}$<br>19.8 | 1<br>25.4 | 1.70<br>0.77 | 5 730<br>25 500 | 3 440<br>15 300 |
| $1^{7}/_{16}$ | CTW107ZM | $1^{5}/_{8}$<br>41.3 | $4^{1}/_{8}$<br>104.8 | $3^{1}/_{2}$<br>88.9 | $4^{13}/_{16}$<br>122.2 | 3<br>76.2 | $1^{5}/_{32}$<br>29.4 | $^{3}/_{8}$<br>9.5 | $^{17}/_{32}$<br>13.5 | $1^{5}/_{8}$<br>41.3 | $^{25}/_{32}$<br>19.8 | 1<br>25.4 | 1.50<br>0.68 | 5 730<br>25 500 | 3 440<br>15 300 |
| $1^{1}/_{2}$ | CTW108ZM | $1^{15}/_{16}$<br>49.2 | $4^{1}/_{2}$<br>114.3 | 4<br>101.6 | $5^{1}/_{2}$<br>139.7 | $3^{7}/_{16}$<br>87.3 | $1^{1}/_{2}$<br>38.1 | $^{9}/_{16}$<br>14.3 | $^{11}/_{16}$<br>17.5 | $1^{15}/_{16}$<br>49.2 | $1^{1}/_{16}$<br>27.0 | $1^{3}/_{16}$<br>30.0 | 2.40<br>1.10 | 6 900<br>30 700 | 4 270<br>19 000 |
| $1^{15}/_{16}$ | CTW115ZM | $1^{15}/_{16}$<br>49.2 | $4^{3}/_{4}$<br>120.7 | 4<br>101.6 | $5^{13}/_{16}$<br>147.6 | $3^{9}/_{16}$<br>90.5 | $1^{1}/_{2}$<br>38.1 | $^{9}/_{16}$<br>14.3 | $^{11}/_{16}$<br>17.5 | $1^{15}/_{16}$<br>49.2 | $1^{1}/_{16}$<br>27.0 | $1^{9}/_{32}$<br>32.6 | 2.65<br>2.21 | 7 890<br>35 100 | 5 220<br>23 200 |

### For metric shafts 20mm - 40mm

| Shaft dia d | Take-up unit designation | A | B | C | L | D | H | G | $A_1$ | J | N | $S_1$ | Mass | Basic radial load rating dynamic C† | static $C_0$† |
|---|---|---|---|---|---|---|---|---|---|---|---|---|---|---|---|
| mm | | in<br>mm | in<br>mm | in<br>mm | in<br>mm | in<br>mm | in<br>mm | in<br>mm | in<br>mm | in<br>mm | in<br>mm | in<br>mm | lb<br>kg | lbf<br>N | lbf<br>N |
| 20 | CTW20ZM | $1^{3}/_{8}$<br>34.9 | $3^{5}/_{8}$<br>92.1 | 3<br>76.2 | $3^{11}/_{16}$<br>93.7 | $2^{3}/_{8}$<br>60.3 | $1^{1}/_{16}$<br>27.0 | $^{7}/_{16}$<br>11.1 | $^{17}/_{32}$<br>13.5 | $1^{7}/_{16}$<br>36.5 | $^{21}/_{32}$<br>16.7 | $^{23}/_{32}$<br>18.3 | 0.81<br>0.37 | 2 860<br>12 700 | 1 470<br>6 500 |
| 25 | CTW25ZM | $1^{3}/_{8}$<br>34.9 | $3^{5}/_{8}$<br>92.1 | 3<br>76.2 | $3^{13}/_{16}$<br>96.8 | $2^{7}/_{16}$<br>61.9 | $1^{1}/_{16}$<br>27.0 | $^{7}/_{16}$<br>11.1 | $^{17}/_{32}$<br>13.5 | $1^{7}/_{16}$<br>36.5 | $^{21}/_{32}$<br>16.7 | $^{25}/_{32}$<br>19.8 | 0.87<br>0.39 | 3 150<br>14 000 | 1 750<br>7 800 |
| 30 | CTW30ZM | $1^{5}/_{8}$<br>41.3 | $4^{1}/_{8}$<br>104.8 | $3^{1}/_{2}$<br>88.9 | $4^{3}/_{8}$<br>111.1 | $2^{3}/_{4}$<br>69.9 | $1^{5}/_{32}$<br>29.4 | $^{3}/_{8}$<br>9.5 | $^{17}/_{32}$<br>13.5 | $1^{5}/_{8}$<br>41.3 | $^{25}/_{32}$<br>19.8 | $^{7}/_{8}$<br>22.2 | 1.40<br>0.64 | 4 380<br>19 500 | 2 520<br>11 200 |
| 35 | CTW35ZM | $1^{5}/_{8}$<br>41.3 | $4^{1}/_{8}$<br>104.8 | $3^{1}/_{2}$<br>88.9 | $4^{13}/_{16}$<br>122.2 | 3<br>76.2 | $1^{5}/_{32}$<br>29.4 | $^{3}/_{8}$<br>9.5 | $^{17}/_{32}$<br>13.5 | $1^{5}/_{8}$<br>41.3 | $^{25}/_{32}$<br>19.8 | 1<br>25.4 | 1.50<br>0.68 | 5 730<br>25 500 | 3 440<br>15 300 |
| 40 | CTW40ZM | $1^{15}/_{16}$<br>49.2 | $4^{1}/_{2}$<br>114.3 | 4<br>101.6 | $5^{1}/_{2}$<br>139.7 | $3^{7}/_{16}$<br>87.3 | $1^{1}/_{2}$<br>38.1 | $^{9}/_{16}$<br>14.3 | $^{11}/_{16}$<br>17.5 | $1^{15}/_{16}$<br>49.2 | $1^{1}/_{16}$<br>27.0 | $1^{3}/_{16}$<br>30.0 | 2.40<br>1.10 | 6 900<br>30 700 | 4 270<br>19 000 |



MRC Marathon series composite mounted bearing units are greased and sealed for life. MRC does not recommend regreasing.
If required, units with relubrication fittings are available for your application. Adding a "G" suffix to the part number denotes a regreasable unit.
Cast polymer housing. No steel coils.

[2] Check with MRC for availability

† Capacities listed are for the insert bearing only and do not reflect the capacity of the housing. If the application loads exceed 80% of the static capacity (Co), MRC Applications Engineering should be consulted for a design review.

## CTW composite wide slot take-up units

Stainless steel insert bearing

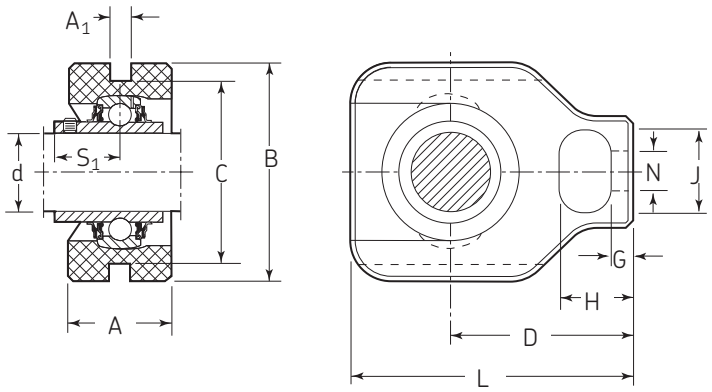


### For inch shafts $^{3}/_{4}$ – $1^{1}/_{2}$

| Shaft dia d | Take-up unit designation | A | B | C | L | D | H | G | $A_1$ | J | N | $S_1$ | Mass | Basic radial load rating dynamic C† | static $C_0$† |
|---|---|---|---|---|---|---|---|---|---|---|---|---|---|---|---|
| in | | in<br>mm | in<br>mm | in<br>mm | in<br>mm | in<br>mm | in<br>mm | in<br>mm | in<br>mm | in<br>mm | in<br>mm | in<br>mm | lb<br>kg | lbf<br>N | lbf<br>N |
| $^{3}/_{4}$ | CTW012SS | $1^{3}/_{8}$<br>34.9 | $3^{5}/_{8}$<br>92.1 | 3<br>76.2 | $3^{11}/_{16}$<br>93.7 | $2^{3}/_{8}$<br>60.3 | $1^{1}/_{16}$<br>27.0 | $^{7}/_{16}$<br>11.1 | $^{17}/_{32}$<br>13.5 | $1^{7}/_{16}$<br>36.5 | $^{21}/_{32}$<br>16.7 | $^{23}/_{32}$<br>18.3 | 0.81<br>0.37 | 2 430<br>10 800 | 1 470<br>6 500 |
| 1 | CTW100SS | $1^{3}/_{8}$<br>34.9 | $3^{5}/_{8}$<br>92.1 | 3<br>76.2 | $3^{13}/_{16}$<br>96.8 | $2^{7}/_{16}$<br>61.9 | $1^{1}/_{16}$<br>27.0 | $^{7}/_{16}$<br>11.1 | $^{17}/_{32}$<br>13.5 | $1^{7}/_{16}$<br>36.5 | $^{21}/_{32}$<br>16.7 | $^{25}/_{32}$<br>19.8 | 0.87<br>0.39 | 2 670<br>11 900 | 1 750<br>7 800 |
| $1^{3}/_{16}$ | CTW103SS | $1^{5}/_{8}$<br>41.3 | $4^{1}/_{8}$<br>104.8 | $3^{1}/_{2}$<br>88.9 | $4^{3}/_{8}$<br>111.1 | $2^{3}/_{4}$<br>69.9 | $1^{5}/_{32}$<br>29.4 | $^{3}/_{8}$<br>9.5 | $^{17}/_{32}$<br>13.5 | $1^{5}/_{8}$<br>41.3 | $^{25}/_{32}$<br>19.8 | $^{7}/_{8}$<br>22.2 | 1.40<br>0.64 | 3 660<br>16 300 | 2 250<br>11 200 |
| $1^{1}/_{4}$ | CTW104SSR | $1^{5}/_{8}$<br>41.3 | $4^{1}/_{8}$<br>104.8 | $3^{1}/_{2}$<br>88.9 | $4^{3}/_{8}$<br>111.1 | $2^{3}/_{4}$<br>69.9 | $1^{5}/_{32}$<br>29.4 | $^{3}/_{8}$<br>9.5 | $^{17}/_{32}$<br>13.5 | $1^{5}/_{8}$<br>41.3 | $^{25}/_{32}$<br>19.8 | 1<br>25.4 | 1.70<br>0.77 | 3 660<br>16 300 | 2 520<br>11 200 |
| $1^{1}/_{4}$ | CTW104SS | $1^{5}/_{8}$<br>41.3 | $4^{1}/_{8}$<br>104.8 | $3^{1}/_{2}$<br>88.9 | $4^{13}/_{16}$<br>122.2 | 3<br>76.2 | $1^{5}/_{32}$<br>29.4 | $^{3}/_{8}$<br>9.5 | $^{17}/_{32}$<br>13.5 | $1^{5}/_{8}$<br>41.3 | $^{25}/_{32}$<br>19.8 | 1<br>25.4 | 1.70<br>0.77 | 4 850<br>21 600 | 3 440<br>15 300 |
| $1^{3}/_{8}$ | CTW106SS | $1^{5}/_{8}$<br>41.3 | $4^{1}/_{8}$<br>104.8 | $3^{1}/_{2}$<br>88.9 | $4^{13}/_{16}$<br>122.2 | 3<br>76.2 | $1^{5}/_{32}$<br>29.4 | $^{3}/_{8}$<br>9.5 | $^{17}/_{32}$<br>13.5 | $1^{5}/_{8}$<br>41.3 | $^{25}/_{32}$<br>19.8 | 1<br>25.4 | 1.60<br>0.73 | 4 850<br>21 600 | 3 440<br>15 300 |
| $1^{7}/_{16}$ | CTW107SS | $1^{5}/_{8}$<br>41.3 | $4^{1}/_{8}$<br>104.8 | $3^{1}/_{2}$<br>88.9 | $4^{13}/_{16}$<br>122.2 | 3<br>76.2 | $1^{5}/_{32}$<br>29.4 | $^{3}/_{8}$<br>9.5 | $^{17}/_{32}$<br>13.5 | $1^{5}/_{8}$<br>41.3 | $^{25}/_{32}$<br>19.8 | 1<br>25.4 | 1.50<br>0.68 | 4 850<br>21 600 | 3 440<br>15 300 |
| $1^{1}/_{2}$ | CTW108SS | $1^{15}/_{16}$<br>49.2 | $4^{1}/_{2}$<br>114.3 | 4<br>101.6 | $5^{1}/_{2}$<br>139.7 | $3^{7}/_{16}$<br>87.3 | $1^{1}/_{2}$<br>38.1 | $^{9}/_{16}$<br>14.3 | $^{11}/_{16}$<br>17.5 | $1^{15}/_{16}$<br>49.2 | $1^{1}/_{16}$<br>27.0 | $1^{3}/_{16}$<br>30.0 | 2.40<br>1.10 | 5 550<br>24 700 | 4 270<br>19 000 |

### For metric shafts 20mm - 40mm

| Shaft dia d | Take-up unit designation | A | B | C | L | D | H | G | $A_1$ | J | N | $S_1$ | Mass | Basic radial load rating dynamic C† | static $C_0$† |
|---|---|---|---|---|---|---|---|---|---|---|---|---|---|---|---|
| mm | | in<br>mm | in<br>mm | in<br>mm | in<br>mm | in<br>mm | in<br>mm | in<br>mm | in<br>mm | in<br>mm | in<br>mm | in<br>mm | lb<br>kg | lbf<br>N | lbf<br>N |
| 20 | CTW20SS | $1^{3}/_{8}$<br>34.9 | $3^{5}/_{8}$<br>92.1 | 3<br>76.2 | $3^{11}/_{16}$<br>93.7 | $2^{3}/_{8}$<br>60.3 | $1^{1}/_{16}$<br>27.0 | $^{7}/_{16}$<br>11.1 | $^{17}/_{32}$<br>13.5 | $1^{7}/_{16}$<br>36.5 | $^{21}/_{32}$<br>16.7 | $^{23}/_{32}$<br>18.3 | 0.81<br>0.37 | 2 430<br>10 800 | 1 470<br>6 500 |
| 25 | CTW25SS | $1^{3}/_{8}$<br>34.9 | $3^{5}/_{8}$<br>92.1 | 3<br>76.2 | $3^{13}/_{16}$<br>96.8 | $2^{7}/_{16}$<br>61.9 | $1^{1}/_{16}$<br>27.0 | $^{7}/_{16}$<br>11.1 | $^{17}/_{32}$<br>13.5 | $1^{7}/_{16}$<br>36.5 | $^{21}/_{32}$<br>16.7 | $^{25}/_{32}$<br>19.8 | 0.87<br>0.39 | 2 670<br>11 900 | 1 750<br>7 800 |
| 30 | CTW30SS | $1^{5}/_{8}$<br>41.3 | $4^{1}/_{8}$<br>104.8 | $3^{1}/_{2}$<br>88.9 | $4^{3}/_{8}$<br>111.1 | $2^{3}/_{4}$<br>69.9 | $1^{5}/_{32}$<br>29.4 | $^{3}/_{8}$<br>9.5 | $^{17}/_{32}$<br>13.5 | $1^{5}/_{8}$<br>41.3 | $^{25}/_{32}$<br>19.8 | $^{7}/_{8}$<br>22.2 | 1.40<br>0.64 | 3 660<br>16 300 | 2 520<br>11 200 |
| 35 | CTW35SS | $1^{5}/_{8}$<br>41.3 | $4^{1}/_{8}$<br>104.8 | $3^{1}/_{2}$<br>88.9 | $4^{13}/_{16}$<br>122.2 | 3<br>76.2 | $1^{5}/_{32}$<br>29.4 | $^{3}/_{8}$<br>9.5 | $^{17}/_{32}$<br>13.5 | $1^{5}/_{8}$<br>41.3 | $^{25}/_{32}$<br>19.8 | 1<br>25.4 | 1.50<br>0.68 | 4 850<br>21 600 | 3 440<br>15 300 |
| 40 | CTW40SS | $1^{15}/_{16}$<br>49.2 | $4^{1}/_{2}$<br>114.3 | 4<br>101.6 | $5^{1}/_{2}$<br>139.7 | $3^{7}/_{16}$<br>87.3 | $1^{1}/_{2}$<br>38.1 | $^{9}/_{16}$<br>14.3 | $^{11}/_{16}$<br>17.5 | $1^{15}/_{16}$<br>49.2 | $1^{1}/_{16}$<br>27.0 | $1^{3}/_{16}$<br>30.0 | 2.40<br>1.10 | 5 550<br>24 700 | 4 270<br>19 000 |



MRC Marathon series composite mounted bearing units are greased and sealed for life. MRC does not recommend regreasing.
If required, units with relubrication fittings are available for your application. Adding a "G" suffix to the part number denotes a regreasable unit.
Cast polymer housing. No steel coils.

† Capacities listed are for the insert bearing only and do not reflect the capacity of the housing. If the application loads exceed 80% of the static capacity (Co), MRC Applications Engineering should be consulted for a design review.

## Stainless steel take-up frames

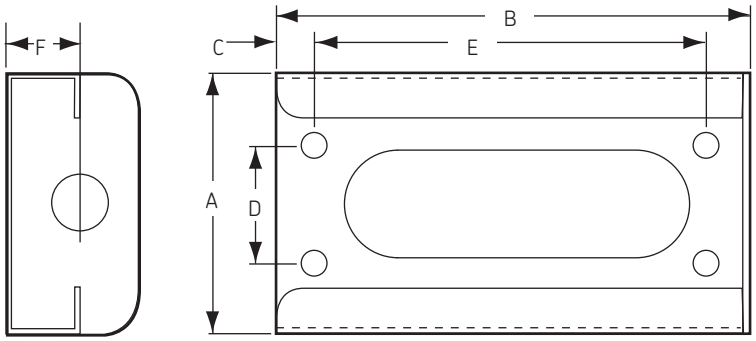


Narrow slot stainless steel take-up frames (all dimensions are in inches)

| Part number | | Frame size | | Bolt pattern for 3/8" bolts | | | Shaft C/L distance | Frame accepts these shaft sizes: |
|---|---|---|---|---|---|---|---|---|
| | Travel | A | B | C | D | E | F | Bearing bore |
| TFN210SS 3 | 3 | | 8 | | | 6 1/2 | | |
| TFN210SS 6 | 6 | 3 3/4 | 11 | .55 | 1 3/4 | 9 | 1 25/64 | 3/4", 20mm, 1", 25mm |
| TFN210SS 9 | 9 | | 15 | | | 12 1/2 | | |
| TFN308SS 3 | 3 | | 9 | | | 7 1/2 | | |
| TFN308SS 6 | 6 | 4 41/64 | 12 | .55 | 2 3/4 | 10 1/2 | 1 27/32 | 1 3/16", 30mm, 1 1/4", |
| TFN308SS 9 | 9 | | 15 | | | 13 1/2 | | 1 3/8", 35mm, 1 7/16" |
| TFN308SS 12 | 12 | | 18 | | | 16 1/2 | | |
| TFN400SS 3 | 3 | | 10 | | | 8 1/2 | | |
| TFN400SS 6 | 6 | | 13 | | | 11 1/2 | | |
| TFN400SS 9 | 9 | 5 1/4 | 16 | .55 | 2 3/4 | 14 1/2 | 1 63/64 | 1 1/2", 40mm, 1 15/16" |
| TFN400SS 12 | 12 | | 19 | | | 17 1/2 | | |
| TFN400SS 18 | 18 | | 25 | | | 23 1/2 | | |

MRC take-up frames are constructed of 304 stainless steel and can be equipped with Marathon series composite mounted bearing units. They are designed for conveyor systems used in meat, poultry, fruit, vegetable, beverage and other food industry operations.

Normally employed at the idler end of conveyor systems, take-up frames support conveyor shafts and act to produce the correct conveyor belt tension. Unlike many take-up frames fabricated on site from non-stainless materials, MRC stainless take-up frames feature sturdy single-piece construction and resist corrosion from frequent washdowns and harsh food industry chemicals.

MRC take-up frames mount securely to conveyor systems via four mounting bolts. The frames and take-up bearing units may be adapted to fit most existing conveyor configurations.

## HACCP-program compatible

MRC stainless take-up frames help support the stringent sanitation requirements of Hazard Analysis Critical Control Point (HACCP) programs. In addition to being corrosion-resistant, the frames have no narrow gaps or crevices that can trap food contaminants. Also, openings in the side and bottom of MRC frames facilitate quick draining during washdowns.

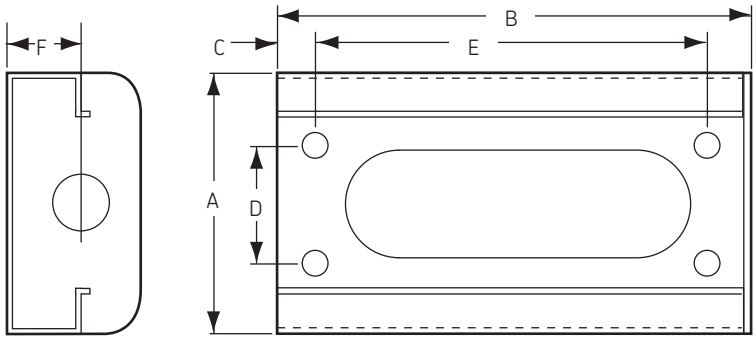


Wide slot stainless steel take-up frames (all dimensions are in inches)

| Part number | | Frame size | | Bolt pattern for $^3/_8$" bolts | | | Shaft C/L distance | Frame accepts these shaft sizes: |
|---|---|---|---|---|---|---|---|---|
| | Travel | A | B | C | D | E | F | Bearing bore |
| TFW300SS 3 | 3 | | 8 | | | $6^1/_2$ | | |
| TFW300SS 6 | 6 | $4^1/_8$ | 11 | .55 | $2^1/_4$ | $9^1/_2$ | $1^{25}/_{64}$ | $^3/_4$", 20mm, 1", 25mm |
| TFW300SS 9 | 9 | | 14 | | | $12^1/_2$ | | |
| TFW300SS 12 | 12 | | 17 | | | $15^1/_2$ | | |
| TFW308SS 3 | 3 | | 9 | | | $7^1/_2$ | | |
| TFW308SS 6 | 6 | | 12 | | | $10^1/_2$ | | |
| TFW308SS 9 | 9 | $4^{41}/_{64}$ | 15 | .55 | $2^3/_4$ | $12^1/_2$ | $1^{27}/_{32}$ | $1^3/_{16}$", 30mm, $1^1/_4$", |
| TFW308SS 12 | 12 | | 18 | | | $16^1/_2$ | | $1^3/_8$", 35mm, $1^7/_{16}$" |
| TFW308SS 18 | 18 | | 24 | | | $22^1/_2$ | | |
| TFW400SS 3 | 3 | | 10 | | | $8^1/_2$ | | |
| TFW400SS 6 | 6 | | 13 | | | $11^1/_2$ | | |
| TFW400SS 9 | 9 | $5^1/_4$ | 16 | .55 | $2^3/_4$ | $14^1/_2$ | $1^{63}/_{64}$ | $1^1/_2$", 40mm, $1^{15}/_{16}$" |
| TFW400SS 12 | 12 | | 19 | | | $17^1/_2$ | | |
| TFW400SS 18 | 18 | | 25 | | | $23^1/_2$ | | |

# Marathon series bearing units

Marathon series bearing units are available separately and may be mounted in MRC take-up frames. These units feature a lightweight thermoplastic housing that resists corrosion from water, citric acid, cleaning agents and most other food industry chemicals. The unit's double-protection sealing arrangement, consisting of an AISI 304 stainless steel insert seal and an AISI 304 stainless steel flinger, protects against both wet and dry contaminants. The units are lubricated for life with a USDA food-grade grease.

Marathon units are available with either a corrosion-resistant ZMaRC-coated insert bearing or a stainless steel bearing.

## ZPB ZMaRC-coated cast iron pillow block units

ZMaRC-coated insert bearing
$HD_i$ series

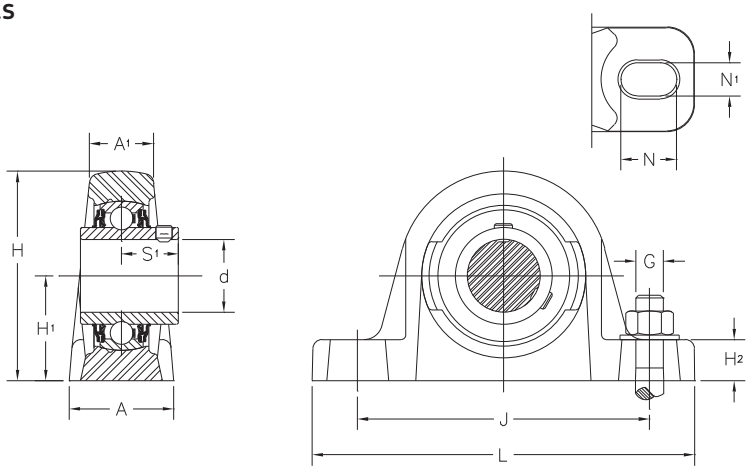


### For inch shafts $^{3}/_{4}$ – $1^{15}/_{16}$

| Shaft dia d | Pillow block designation | A | $A_1$ | H | $H_1$ | $H_2$ | J Min | J Max | L | N | $N_1$ | G | $S_1$ | Mass | Basic radial load rating dynamic C | static $C_0$ |
|---|---|---|---|---|---|---|---|---|---|---|---|---|---|---|---|---|
| in | | in<br>mm | in<br>mm | in<br>mm | in<br>mm | in<br>mm | in<br>mm | in<br>mm | in<br>mm | in<br>mm | in<br>mm | in<br>mm | in<br>mm | lb<br>kg | lbf<br>N | lbf<br>N |
| $^{3}/_{4}$ | ZPB012ZM | $1^{1}/_{4}$<br>32.0 | $^{53}/_{64}$<br>21.0 | $2^{1}/_{2}$<br>64.0 | $1^{5}/_{16}$<br>33.3 | $^{35}/_{64}$<br>14.0 | $3^{15}/_{32}$<br>88.0 | $4^{11}/_{64}$<br>106.0 | 5<br>127.0 | $^{13}/_{16}$<br>20.5 | $^{29}/_{64}$<br>11.5 | $^{3}/_{8}$<br>10.0 | $^{23}/_{32}$<br>18.3 | 1.40<br>0.64 | 2 860<br>12 700 | 1 470<br>6 550 |
| $^{15}/_{16}$ | ZPB015ZM | $1^{7}/_{16}$<br>36.0 | $^{7}/_{8}$<br>22.0 | $2^{3}/_{4}$<br>70.0 | $1^{7}/_{16}$<br>36.5 | $^{5}/_{8}$<br>16.0 | $3^{45}/_{64}$<br>94.0 | $4^{21}/_{64}$<br>110.0 | $5^{1}/_{8}$<br>130.0 | $^{49}/_{64}$<br>19.5 | $^{29}/_{64}$<br>11.5 | $^{3}/_{8}$<br>10.0 | $^{25}/_{32}$<br>19.8 | 1.75<br>0.79 | 3 150<br>14 000 | 1 750<br>7 800 |
| 1 | ZPB100ZM | $1^{7}/_{16}$<br>36.0 | $^{7}/_{8}$<br>22.0 | $2^{3}/_{4}$<br>70.0 | $1^{7}/_{16}$<br>36.5 | $^{5}/_{8}$<br>16.0 | $3^{45}/_{64}$<br>94.0 | $4^{21}/_{64}$<br>110.0 | $5^{1}/_{8}$<br>130.0 | $^{49}/_{64}$<br>19.5 | $^{29}/_{64}$<br>11.5 | $^{3}/_{8}$<br>10.0 | $^{25}/_{32}$<br>19.8 | 1.70<br>0.77 | 3 150<br>14 000 | 1 750<br>7 800 |
| $1^{1}/_{8}$ | ZPB102ZM | $1^{37}/_{64}$<br>40.0 | 1<br>25.4 | $3^{15}/_{64}$<br>82.0 | $1^{11}/_{16}$<br>42.9 | $^{21}/_{32}$<br>16.5 | $4^{1}/_{4}$<br>108.0 | 5<br>127.0 | $5^{63}/_{64}$<br>152.0 | $^{59}/_{64}$<br>23.5 | $^{35}/_{64}$<br>14.0 | $^{1}/_{2}$<br>12.7 | $^{7}/_{8}$<br>22.2 | 2.85<br>1.30 | 4 380<br>19 500 | 2 520<br>11 200 |
| $1^{3}/_{16}$ | ZPB103ZM | $1^{37}/_{64}$<br>40.0 | 1<br>25.4 | $3^{15}/_{64}$<br>82.0 | $1^{11}/_{16}$<br>42.9 | $^{21}/_{32}$<br>16.5 | $4^{1}/_{4}$<br>108.0 | 5<br>127.0 | $5^{63}/_{64}$<br>152.0 | $^{59}/_{64}$<br>23.5 | $^{35}/_{64}$<br>14.0 | $^{1}/_{2}$<br>12.7 | $^{7}/_{8}$<br>22.2 | 2.85<br>1.30 | 4 380<br>19 500 | 2 520<br>11 200 |
| $1^{1}/_{4}$ | ZPB104ZMR | $1^{37}/_{64}$<br>40.0 | 1<br>25.4 | $3^{15}/_{64}$<br>82.0 | $1^{11}/_{16}$<br>42.9 | $^{21}/_{32}$<br>16.5 | $4^{1}/_{4}$<br>108.0 | 5<br>127.0 | $5^{63}/_{64}$<br>152.0 | $^{59}/_{64}$<br>23.5 | $^{35}/_{64}$<br>14.0 | $^{1}/_{2}$<br>12.7 | $^{7}/_{8}$<br>22.2 | 2.75<br>1.25 | 4 380<br>19 500 | 2 520<br>11 200 |
| $1^{1}/_{4}$ | ZPB104ZM | $1^{49}/_{64}$<br>45.0 | $1^{1}/_{8}$<br>28.0 | $3^{21}/_{32}$<br>93.0 | $1^{7}/_{8}$<br>47.6 | $^{3}/_{4}$<br>19.0 | $4^{43}/_{64}$<br>119.0 | $5^{15}/_{64}$<br>133.0 | $6^{19}/_{64}$<br>160.0 | $^{53}/_{64}$<br>21.0 | $^{35}/_{64}$<br>14.0 | $^{1}/_{2}$<br>12.7 | 1<br>25.4 | 3.65<br>1.65 | 5 730<br>25 500 | 3 440<br>15 300 |
| $1^{7}/_{16}$ | ZPB107ZM | $1^{49}/_{64}$<br>45.0 | $1^{1}/_{8}$<br>28.0 | $3^{21}/_{32}$<br>93.0 | $1^{7}/_{8}$<br>47.6 | $^{3}/_{4}$<br>19.0 | $4^{43}/_{64}$<br>119.0 | $5^{15}/_{64}$<br>133.0 | $6^{19}/_{64}$<br>160.0 | $^{53}/_{64}$<br>21.0 | $^{35}/_{64}$<br>14.0 | $^{1}/_{2}$<br>12.7 | 1<br>25.4 | 3.40<br>1.55 | 5 730<br>25 500 | 3 440<br>15 300 |
| $1^{1}/_{2}$ | ZPB108ZM | $1^{57}/_{64}$<br>48.0 | $1^{7}/_{32}$<br>31.0 | $3^{29}/_{32}$<br>99.0 | $1^{15}/_{16}$<br>49.2 | $^{3}/_{4}$<br>19.0 | $4^{59}/_{64}$<br>125.0 | $5^{3}/_{4}$<br>146.0 | $6^{57}/_{64}$<br>175.0 | $^{15}/_{16}$<br>24.0 | $^{35}/_{64}$<br>14.0 | $^{1}/_{2}$<br>12.7 | $^{13}/_{16}$<br>30.0 | 4.30<br>1.95 | 6 900<br>30 700 | 4 270<br>19 000 |
| $1^{15}/_{16}$ | ZPB115ZM | $2^{1}/_{8}$<br>54.0 | $1^{3}/_{8}$<br>35.0 | $4^{1}/_{2}$<br>114.0 | $2^{1}/_{4}$<br>57.2 | $^{7}/_{8}$<br>22.0 | $5^{55}/_{64}$<br>149.0 | $6^{1}/_{2}$<br>165.0 | 8<br>203.0 | $1^{1}/_{16}$<br>27.0 | $^{45}/_{64}$<br>18.0 | $^{5}/_{8}$<br>16.0 | $1^{9}/_{32}$<br>32.6 | 6.30<br>2.85 | 7 890<br>35 100 | 5 220<br>23 200 |

### For metric shafts 20mm - 40mm

| Shaft dia d | Pillow block designation | A | $A_1$ | H | $H_1$ | $H_2$ | J Min | J Max | L | N | $N_1$ | G | $S_1$ | Mass | Basic radial load rating dynamic C | static $C_0$ |
|---|---|---|---|---|---|---|---|---|---|---|---|---|---|---|---|---|
| mm | | in<br>mm | in<br>mm | in<br>mm | in<br>mm | in<br>mm | in<br>mm | in<br>mm | in<br>mm | in<br>mm | in<br>mm | in<br>mm | in<br>mm | lb<br>kg | lbf<br>N | lbf<br>N |
| 20 | ZPB20ZM | $1^{1}/_{4}$<br>32.0 | $^{53}/_{64}$<br>21.0 | $2^{1}/_{2}$<br>64.0 | $1^{5}/_{16}$<br>33.3 | $^{35}/_{64}$<br>14.0 | $3^{15}/_{32}$<br>88.0 | $4^{11}/_{64}$<br>106.0 | 5<br>127.0 | $^{13}/_{16}$<br>20.5 | $^{29}/_{64}$<br>11.5 | $^{3}/_{8}$<br>10.0 | $^{23}/_{32}$<br>18.3 | 1.40<br>0.64 | 2 860<br>12 700 | 1 470<br>6 550 |
| 25 | ZPB25ZM | $1^{7}/_{16}$<br>36.0 | $^{7}/_{8}$<br>22.0 | $2^{3}/_{4}$<br>70.0 | $1^{7}/_{16}$<br>36.5 | $^{5}/_{8}$<br>16.0 | $3^{45}/_{64}$<br>94.0 | $4^{21}/_{64}$<br>110.0 | $5^{1}/_{8}$<br>130.0 | $^{49}/_{64}$<br>19.5 | $^{29}/_{64}$<br>11.5 | $^{3}/_{8}$<br>10.0 | $^{25}/_{32}$<br>19.8 | 1.70<br>0.77 | 3 150<br>14 000 | 1 750<br>7 800 |
| 30 | ZPB30ZM | $1^{37}/_{64}$<br>40.0 | 1<br>25.4 | $3^{15}/_{64}$<br>82.0 | $1^{11}/_{16}$<br>42.9 | $^{21}/_{32}$<br>16.5 | $4^{1}/_{4}$<br>108.0 | 5<br>127.0 | $5^{63}/_{64}$<br>152.0 | $^{59}/_{64}$<br>23.5 | $^{35}/_{64}$<br>14.0 | $^{1}/_{2}$<br>12.7 | $^{7}/_{8}$<br>22.2 | 2.85<br>1.30 | 4 380<br>19 500 | 2 520<br>11 200 |
| 35 | ZPB35ZM | $1^{49}/_{64}$<br>45.0 | $1^{1}/_{8}$<br>28.0 | $3^{21}/_{32}$<br>93.0 | $1^{7}/_{8}$<br>47.6 | $^{3}/_{4}$<br>19.0 | $4^{43}/_{64}$<br>119.0 | $5^{15}/_{64}$<br>133.0 | $6^{19}/_{64}$<br>160.0 | $^{53}/_{64}$<br>21.0 | $^{35}/_{64}$<br>14.0 | $^{1}/_{2}$<br>12.7 | 1<br>25.4 | 3.65<br>1.65 | 5 730<br>25 500 | 3 440<br>15 300 |
| 40 | ZPB40ZM | $1^{57}/_{64}$<br>48.0 | $1^{7}/_{32}$<br>31.0 | $3^{29}/_{32}$<br>99.0 | $1^{15}/_{16}$<br>49.2 | $^{3}/_{4}$<br>19.0 | $4^{59}/_{64}$<br>125.0 | $5^{3}/_{4}$<br>146.0 | $6^{57}/_{64}$<br>175.0 | $^{15}/_{16}$<br>24.0 | $^{35}/_{64}$<br>14.0 | $^{1}/_{2}$<br>12.7 | $^{13}/_{16}$<br>30.0 | 4.30<br>1.95 | 6 900<br>30 700 | 4 270<br>19 000 |



* Metric units are supplied through the Made-To-Order (MTO) Program

## Z2F ZMaRC-coated cast iron two-bolt flange units

ZMaRC-coated insert bearing
$HD_i$ series

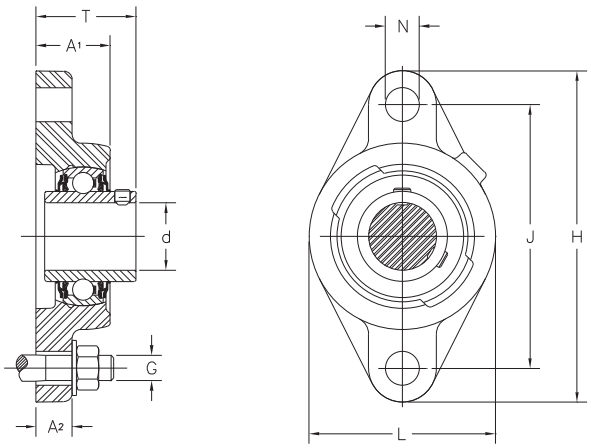


### For inch shafts $^{3}/_{4}$ – $1^{15}/_{16}$

| Shaft dia d | Flange unit designation | $A_1$ | $A_2$ | H | J | L | N | G | T | Mass | Basic radial load rating dynamic C | static $C_0$ |
|---|---|---|---|---|---|---|---|---|---|---|---|---|
| in | | in<br>mm | in<br>mm | in<br>mm | in<br>mm | in<br>mm | in<br>mm | in<br>mm | in<br>mm | lb<br>kg | lbf<br>N | lbf<br>N |
| $^{3}/_{4}$ | Z2F012ZM | $^{31}/_{32}$<br>24.6 | $^{7}/_{16}$<br>11.1 | $4^{13}/_{32}$<br>111.9 | $3^{17}/_{32}$<br>89.7 | $2^{3}/_{8}$<br>60.3 | $^{7}/_{16}$<br>11.1 | $^{3}/_{8}$<br>10.0 | $1^{15}/_{32}$<br>37.3 | 0.90<br>0.41 | 2 860<br>12 700 | 1 470<br>6 550 |
| $^{15}/_{16}$ | Z2F015ZM | $1^{3}/_{16}$<br>30.2 | $^{5}/_{8}$<br>15.9 | $4^{57}/_{64}$<br>123.8 | $3^{57}/_{64}$<br>98.8 | $2^{3}/_{4}$<br>69.9 | $^{1}/_{2}$<br>12.7 | $^{7}/_{16}$<br>11.0 | $1^{17}/_{32}$<br>38.8 | 1.35<br>0.61 | 3 150<br>14 000 | 1 750<br>7 800 |
| 1 | Z2F100ZM | $1^{3}/_{16}$<br>30.2 | $^{5}/_{8}$<br>15.9 | $4^{57}/_{64}$<br>123.8 | $3^{57}/_{64}$<br>98.8 | $2^{3}/_{4}$<br>69.9 | $^{1}/_{2}$<br>12.7 | $^{7}/_{16}$<br>11.0 | $1^{17}/_{32}$<br>38.8 | 1.30<br>0.59 | 3 150<br>14 000 | 1 750<br>7 800 |
| $1^{1}/_{8}$ | Z2F102ZM | $1^{9}/_{32}$<br>32.5 | $^{17}/_{32}$<br>13.5 | $5^{9}/_{16}$<br>141.3 | $4^{19}/_{32}$<br>116.7 | $3^{1}/_{8}$<br>79.4 | $^{1}/_{2}$<br>12.7 | $^{7}/_{16}$<br>11.0 | $1^{21}/_{32}$<br>42.2 | 2.05<br>0.93 | 4 380<br>19 500 | 2 520<br>11 200 |
| $1^{3}/_{16}$ | Z2F103ZM | $1^{9}/_{32}$<br>32.5 | $^{17}/_{32}$<br>13.5 | $5^{9}/_{16}$<br>141.3 | $4^{19}/_{32}$<br>116.7 | $3^{1}/_{8}$<br>79.4 | $^{1}/_{2}$<br>12.7 | $^{7}/_{16}$<br>11.0 | $1^{21}/_{32}$<br>42.2 | 2.00<br>0.91 | 4 380<br>19 500 | 2 520<br>11 200 |
| $1^{1}/_{4}$ | Z2F104ZMR | $1^{9}/_{32}$<br>32.5 | $^{17}/_{32}$<br>13.5 | $^{59}/_{16}$<br>141.3 | $4^{19}/_{32}$<br>116.7 | $3^{1}/_{8}$<br>79.4 | $^{1}/_{2}$<br>12.7 | $^{7}/_{16}$<br>11.0 | $1^{21}/_{32}$<br>42.2 | 1.95<br>0.88 | 4 380<br>19 500 | 2 520<br>11 200 |
| $1^{1}/_{4}$ | Z2F104ZM | $1^{11}/_{32}$<br>34.1 | $^{9}/_{16}$<br>14.3 | $6^{1}/_{8}$<br>155.6 | $5^{1}/_{8}$<br>130.2 | $3^{5}/_{8}$<br>92.1 | $^{9}/_{16}$<br>14.3 | $^{1}/_{2}$<br>12.7 | $1^{27}/_{32}$<br>46.4 | 2.85<br>1.30 | 5 730<br>25 500 | 3 440<br>15 300 |
| $1^{7}/_{16}$ | Z2F107ZM | $1^{11}/_{32}$<br>34.1 | $^{9}/_{16}$<br>14.3 | $6^{1}/_{8}$<br>155.6 | $5^{1}/_{8}$<br>130.2 | $3^{5}/_{8}$<br>92.1 | $^{9}/_{16}$<br>14.3 | $^{1}/_{2}$<br>12.7 | $1^{27}/_{32}$<br>46.4 | 2.75<br>1.25 | 5 730<br>25 500 | 3 440<br>15 300 |
| $1^{1}/_{2}$ | Z2F108ZM | $1^{17}/_{32}$<br>38.9 | $^{9}/_{16}$<br>14.3 | $6^{3}/_{4}$<br>171.5 | $5^{21}/_{32}$<br>143.7 | 4<br>101.6 | $^{9}/_{16}$<br>14.3 | $^{1}/_{2}$<br>12.7 | $2^{1}/_{8}$<br>54.2 | 3.75<br>1.70 | 6 900<br>30 700 | 4 270<br>19 000 |
| $1^{15}/_{16}$ | Z2F115ZM | $1^{23}/_{32}$<br>43.7 | $^{25}/_{32}$<br>19.8 | $7^{7}/_{16}$<br>188.9 | $6^{3}/_{16}$<br>157.2 | $4^{9}/_{16}$<br>115.9 | $^{5}/_{8}$<br>15.9 | $^{9}/_{16}$<br>14.0 | $2^{3}/_{8}$<br>60.6 | 5.05<br>2.30 | 7 890<br>35 100 | 5 220<br>23 200 |

### For metric shafts 20mm - 40mm

| Shaft dia d | Flange unit designation | $A_1$ | $A_2$ | H | J | L | N | G | T | Mass | Basic radial load rating dynamic C | static $C_0$ |
|---|---|---|---|---|---|---|---|---|---|---|---|---|
| mm | | in<br>mm | in<br>mm | in<br>mm | in<br>mm | in<br>mm | in<br>mm | in<br>mm | in<br>mm | lb<br>kg | lbf<br>N | lbf<br>N |
| 20 | Z2F20ZM | $^{31}/_{32}$<br>24.6 | $^{7}/_{16}$<br>11.1 | $4^{13}/_{32}$<br>111.9 | $3^{17}/_{32}$<br>89.7 | $2^{3}/_{8}$<br>60.3 | $^{7}/_{16}$<br>11.1 | $^{3}/_{8}$<br>10.0 | $1^{15}/_{32}$<br>37.3 | 0.90<br>0.41 | 2 860<br>12 700 | 1 470<br>6 550 |
| 25 | Z2F25ZM | $1^{3}/_{16}$<br>30.2 | $^{5}/_{8}$<br>15.9 | $4^{57}/_{64}$<br>123.8 | $3^{57}/_{64}$<br>98.8 | $2^{3}/_{4}$<br>69.9 | $^{1}/_{2}$<br>12.7 | $^{7}/_{16}$<br>11.0 | $1^{17}/_{32}$<br>38.8 | 1.30<br>0.59 | 3 150<br>14 000 | 1 750<br>7 800 |
| 30 | Z2F30ZM | $1^{9}/_{32}$<br>32.5 | $^{17}/_{32}$<br>13.5 | $5^{9}/_{16}$<br>141.3 | $4^{19}/_{32}$<br>116.7 | $3^{1}/_{8}$<br>79.4 | $^{1}/_{2}$<br>12.7 | $^{7}/_{16}$<br>11.0 | $1^{21}/_{32}$<br>42.2 | 2.05<br>0.93 | 4 380<br>19 500 | 2 520<br>11 200 |
| 35 | Z2F35ZM | $1^{11}/_{32}$<br>34.1 | $^{9}/_{16}$<br>14.3 | $6^{1}/_{8}$<br>155.6 | $5^{1}/_{8}$<br>130.2 | $3^{5}/_{8}$<br>92.1 | $^{9}/_{16}$<br>14.3 | $^{1}/_{2}$<br>12.7 | $1^{27}/_{32}$<br>46.4 | 2.85<br>1.30 | 5 730<br>25 500 | 3 440<br>15 300 |
| 40 | Z2F40ZM | $1^{17}/_{32}$<br>38.9 | $^{9}/_{16}$<br>14.3 | $6^{3}/_{4}$<br>171.5 | $5^{21}/_{32}$<br>143.7 | 4<br>101.6 | $^{9}/_{16}$<br>14.3 | $^{1}/_{2}$<br>12.7 | $2^{1}/_{8}$<br>54.2 | 3.75<br>1.70 | 6 900<br>30 700 | 4 270<br>19 000 |



* Metric units are supplied through the Made-To-Order (MTO) Program

## Z4F ZMaRC-coated cast iron four-bolt flange units

ZMaRC-coated insert bearing
$HD_i$ series

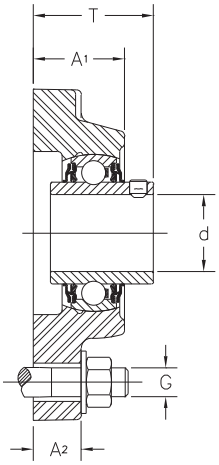


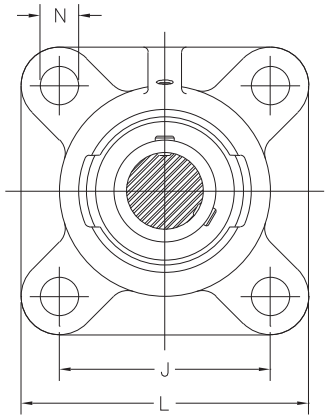


### For inch shafts $^{3}/_{4}$ – $1^{15}/_{16}$

| Shaft dia d | Flange unit designation | $A_1$ | $A_2$ | J | L | N | G | T | Mass | Basic radial load rating dynamic C | static $C_0$ |
|---|---|---|---|---|---|---|---|---|---|---|---|
| in | | in<br>mm | in<br>mm | in<br>mm | in<br>mm | in<br>mm | in<br>mm | in<br>mm | lb<br>kg | lbf<br>N | lbf<br>N |
| $^{3}/_{4}$ | Z4F012ZM | $1^{1}/_{8}$<br>28.6 | $^{5}/_{8}$<br>15.9 | $2^{1}/_{2}$<br>63.5 | $3^{3}/_{8}$<br>85.7 | $^{7}/_{16}$<br>11.1 | $^{3}/_{8}$<br>10.0 | $1^{17}/_{32}$<br>38.8 | 1.35<br>0.61 | 2 860<br>12 700 | 1 470<br>6 550 |
| $^{15}/_{16}$ | Z4F015ZM | $1^{3}/_{16}$<br>30.2 | $^{5}/_{8}$<br>15.9 | $2^{3}/_{4}$<br>69.9 | $3^{3}/_{4}$<br>95.3 | $^{1}/_{2}$<br>12.7 | $^{7}/_{16}$<br>11.0 | $1^{17}/_{32}$<br>38.8 | 1.85<br>0.84 | 3 150<br>14 000 | 1 750<br>7 800 |
| 1 | Z4F100ZM | $1^{3}/_{16}$<br>30.2 | $^{5}/_{8}$<br>15.9 | $2^{3}/_{4}$<br>69.9 | $3^{3}/_{4}$<br>95.3 | $^{1}/_{2}$<br>12.7 | $^{7}/_{16}$<br>11.0 | $1^{17}/_{32}$<br>38.8 | 1.80<br>0.82 | 3 150<br>14 000 | 1 750<br>7 800 |
| $1^{1}/_{8}$ | Z4F102ZM | $1^{9}/_{32}$<br>32.5 | $^{19}/_{32}$<br>15.1 | $3^{1}/_{4}$<br>82.6 | $4^{1}/_{4}$<br>108.0 | $^{1}/_{2}$<br>12.7 | $^{7}/_{16}$<br>11.0 | $1^{21}/_{32}$<br>42.2 | 2.65<br>1.20 | 4 380<br>19 500 | 2 520<br>11 200 |
| $^{13}/_{16}$ | Z4F103ZM | $1^{9}/_{32}$<br>32.5 | $1^{9}/_{32}$<br>15.1 | $3^{1}/_{4}$<br>82.6 | $4^{1}/_{4}$<br>108.0 | $^{1}/_{2}$<br>12.7 | $^{7}/_{16}$<br>11.0 | $1^{21}/_{32}$<br>42.2 | 2.65<br>1.20 | 4 380<br>19 500 | 2 520<br>11 200 |
| $1^{1}/_{4}$ | Z4F104ZMR | $1^{9}/_{32}$<br>32.5 | $^{19}/_{32}$<br>15.1 | $3^{1}/_{4}$<br>82.6 | $4^{1}/_{4}$<br>108.0 | $^{1}/_{2}$<br>12.7 | $^{7}/_{16}$<br>11.0 | $1^{21}/_{32}$<br>42.2 | 2.65<br>1.20 | 4 380<br>19 500 | 2 520<br>11 200 |
| $1^{1}/_{4}$ | Z4F104ZM | $1^{3}/_{8}$<br>34.9 | $^{5}/_{8}$<br>15.9 | $3^{5}/_{8}$<br>92.1 | $4^{5}/_{8}$<br>117.5 | $^{9}/_{16}$<br>14.3 | $^{1}/_{2}$<br>12.7 | $1^{27}/_{32}$<br>46.4 | 3.30<br>1.50 | 5 730<br>25 500 | 3 440<br>15 300 |
| $1^{7}/_{16}$ | Z4F107ZM | $1^{3}/_{8}$<br>34.9 | $^{5}/_{8}$<br>15.9 | $3^{5}/_{8}$<br>92.1 | $4^{5}/_{8}$<br>117.5 | $^{9}/_{16}$<br>14.3 | $^{1}/_{2}$<br>12.7 | $1^{27}/_{32}$<br>46.4 | 3.20<br>1.45 | 5 730<br>25 500 | 3 440<br>15 300 |
| $1^{1}/_{2}$ | Z4F108ZM | $1^{17}/_{32}$<br>38.9 | $^{21}/_{32}$<br>16.7 | 4<br>101.6 | $5^{1}/_{8}$<br>130.2 | $^{9}/_{16}$<br>14.3 | $^{1}/_{2}$<br>12.7 | $2^{1}/_{8}$<br>54.2 | 4.30<br>2.00 | 6 900<br>30 700 | 4 270<br>19 000 |
| $1^{15}/_{16}$ | Z4F115ZM | $1^{3}/_{4}$<br>44.5 | $^{25}/_{32}$<br>19.8 | $4^{3}/_{8}$<br>111.1 | $5^{5}/_{8}$<br>142.9 | $^{5}/_{8}$<br>15.9 | $^{9}/_{16}$<br>14.0 | $2^{7}/_{32}$<br>56.6 | 5.60<br>2.55 | 7 890<br>35 100 | 5 220<br>23 200 |

### For metric shafts 20mm - 40mm*

| Shaft dia d | Flange unit designation | $A_1$ | $A_2$ | J | L | N | G | T | Mass | Basic radial load rating dynamic C | static $C_0$ |
|---|---|---|---|---|---|---|---|---|---|---|---|
| in | | in<br>mm | in<br>mm | in<br>mm | in<br>mm | in<br>mm | in<br>mm | in<br>mm | lb<br>kg | lbf<br>N | lbf<br>N |
| 20 | Z4F20ZM | $1^{1}/_{8}$<br>28.6 | $^{5}/_{8}$<br>15.9 | $2^{1}/_{2}$<br>63.5 | $3^{3}/_{8}$<br>85.7 | $^{7}/_{16}$<br>11.1 | $^{3}/_{8}$<br>10.0 | $1^{17}/_{32}$<br>38.8 | 1.35<br>0.61 | 2 860<br>12 700 | 1 470<br>6 550 |
| 25 | Z4F25ZM | $1^{3}/_{16}$<br>30.2 | $^{5}/_{8}$<br>15.9 | $2^{3}/_{4}$<br>69.9 | $3^{3}/_{4}$<br>95.3 | $^{1}/_{2}$<br>12.7 | $^{7}/_{16}$<br>11.0 | $1^{17}/_{32}$<br>38.8 | 1.80<br>0.82 | 3 150<br>14 000 | 1 750<br>7 800 |
| 30 | Z4F30ZM | $1^{9}/_{32}$<br>32.5 | $1^{9}/_{32}$<br>15.1 | $3^{1}/_{4}$<br>82.6 | $4^{1}/_{4}$<br>108.0 | $^{1}/_{2}$<br>12.7 | $^{7}/_{16}$<br>11.0 | $1^{21}/_{32}$<br>42.2 | 2.65<br>1.20 | 4 380<br>19 500 | 2 520<br>11 200 |
| 35 | Z4F35ZM | $1^{3}/_{8}$<br>34.9 | $^{5}/_{8}$<br>15.9 | $3^{5}/_{8}$<br>92.1 | $4^{5}/_{8}$<br>117.5 | $^{9}/_{16}$<br>14.3 | $^{1}/_{2}$<br>12.7 | $1^{27}/_{32}$<br>46.4 | 3.30<br>1.50 | 5 730<br>25 500 | 3 440<br>15 300 |
| 40 | Z4F40ZM | $1^{17}/_{32}$<br>38.9 | $^{21}/_{32}$<br>16.7 | 4<br>101.6 | $5^{1}/_{8}$<br>130.2 | $^{9}/_{16}$<br>14.3 | $^{1}/_{2}$<br>12.7 | $2^{1}/_{8}$<br>54.2 | 4.30<br>2.00 | 6 900<br>30 700 | 4 270<br>19 000 |



* Metric units are supplied through the Made-To-Order (MTO) Program

## ZTB ZMaRC-coated cast iron tapped base units

ZMaRC-coated insert bearing
$HD_i$ series

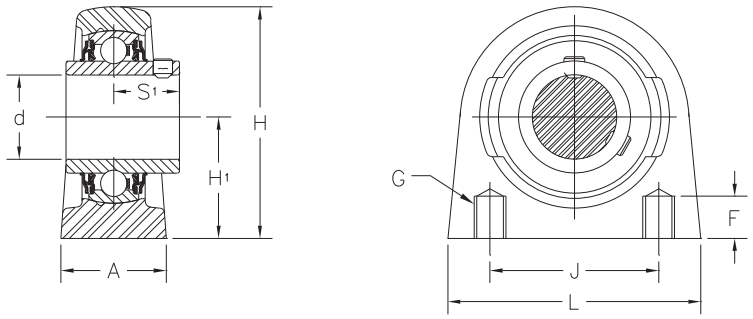


### For inch shafts $^{3}/_{4}$ – $1^{15}/_{16}$

| Shaft dia d | Tapped-base unit designation | $A_1$ | H | $H_1$ | J | L | F | G | $S_1$ | Mass | Basic radial load rating dynamic C | static $C_0$ |
|---|---|---|---|---|---|---|---|---|---|---|---|---|
| in | | in<br>mm | in<br>mm | in<br>mm | in<br>mm | in<br>mm | in<br>mm | in<br>mm | in<br>mm | lb<br>kg | lbf<br>N | lbf<br>N |
| $^{3}/_{4}$ | ZTB012ZM | $1^{1}/_{2}$<br>38.1 | $2^{9}/_{16}$<br>65.1 | $1^{5}/_{16}$<br>33.3 | 2<br>50.8 | $2^{5}/_{8}$<br>66.7 | $^{1}/_{2}$<br>12.7 | $^{3}/_{8}$ –16<br>$^{3}/_{8}$ –16 | $^{23}/_{32}$<br>18.3 | 1.80<br>0.82 | 2 860<br>12 700 | 1 470<br>6 550 |
| $^{15}/_{16}$ | ZTB015ZM | $1^{1}/_{2}$<br>38.1 | $2^{13}/_{16}$<br>71.4 | $1^{7}/_{16}$<br>36.5 | 2<br>50.8 | 3<br>76.2 | $^{1}/_{2}$<br>12.7 | $^{3}/_{8}$ –16<br>$^{3}/_{8}$ –16 | $^{25}/_{32}$<br>19.8 | 2.05<br>0.93 | 3 150<br>14 000 | 1 750<br>7 800 |
| 1 | ZTB100ZM | $1^{1}/_{2}$<br>38.1 | $2^{13}/_{16}$<br>71.4 | $1^{7}/_{16}$<br>36.5 | 2<br>50.8 | 3<br>76.2 | $^{1}/_{2}$<br>12.7 | $^{3}/_{8}$ –16<br>$^{3}/_{8}$ –16 | $^{25}/_{32}$<br>19.8 | 2.00<br>0.91 | 3 150<br>14 000 | 1 750<br>7 800 |
| $1^{1}/_{8}$ | ZTB102ZM | $1^{1}/_{2}$<br>38.1 | $3^{3}/_{8}$<br>85.7 | $1^{11}/_{16}$<br>42.9 | 3<br>76.2 | $3^{7}/_{8}$<br>98.4 | $^{5}/_{8}$<br>15.9 | $^{7}/_{16}$ –14<br>$^{7}/_{16}$ –14 | $^{7}/_{8}$<br>22.2 | 3.50<br>1.59 | 4 380<br>19 500 | 2 520<br>11 200 |
| $1^{3}/_{16}$ | ZTB103ZM | $1^{1}/_{2}$<br>38.1 | $3^{3}/_{8}$<br>85.7 | $1^{11}/_{16}$<br>42.9 | 3<br>76.2 | $3^{7}/_{8}$<br>98.4 | $^{5}/_{8}$<br>15.9 | $^{7}/_{16}$ –14<br>$^{7}/_{16}$ –14 | $^{7}/_{8}$<br>22.2 | 3.50<br>1.59 | 4 380<br>19 500 | 2 520<br>11 200 |
| $1^{1}/_{4}$ | ZTB104ZMR | $1^{1}/_{2}$<br>38.1 | $3^{3}/_{8}$<br>85.7 | $1^{11}/_{16}$<br>42.9 | 3<br>76.2 | $3^{7}/_{8}$<br>98.4 | $^{5}/_{8}$<br>15.9 | $^{7}/_{16}$ –14<br>$^{7}/_{16}$ –14 | $^{7}/_{8}$<br>22.2 | 3.50<br>1.59 | 4 380<br>19 500 | 2 520<br>11 200 |
| $1^{1}/_{4}$ | ZTB104ZM | $1^{7}/_{8}$<br>47.6 | $3^{3}/_{4}$<br>95.3 | $1^{7}/_{8}$<br>47.6 | $3^{1}/_{4}$<br>82.6 | $4^{1}/_{8}$<br>104.8 | $^{3}/_{4}$<br>19.1 | $^{1}/_{2}$ –13<br>$^{1}/_{2}$ –13 | 1<br>25.4 | 4.50<br>2.05 | 5 730<br>25 500 | 3 440<br>15 300 |
| $1^{7}/_{16}$ | ZTB107ZM | $1^{7}/_{8}$<br>47.6 | $3^{3}/_{4}$<br>95.3 | $1^{7}/_{8}$<br>47.6 | $3^{1}/_{4}$<br>82.6 | $4^{1}/_{8}$<br>104.8 | $^{3}/_{4}$<br>19.1 | $^{1}/_{2}$ –13<br>$^{1}/_{2}$ –13 | 1<br>25.4 | 4.50<br>2.05 | 5 730<br>25 500 | 3 440<br>15 300 |
| $1^{1}/_{2}$ | ZTB108ZM | $1^{7}/_{8}$<br>47.6 | $3^{15}/_{16}$<br>100.0 | $1^{15}/_{16}$<br>49.2 | $3^{1}/_{2}$<br>88.9 | $4^{1}/_{2}$<br>114.3 | $^{3}/_{4}$<br>19.1 | $^{1}/_{2}$ –13<br>$^{1}/_{2}$ –13 | $1^{3}/_{16}$<br>30.0 | 6.00<br>2.73 | 6 900<br>30 700 | 4 270<br>19 000 |
| $1^{15}/_{16}$ | ZTB115ZM | 2<br>50.8 | $4^{5}/_{8}$<br>117.5 | $2^{1}/_{4}$<br>57.2 | 4<br>101.6 | $5^{5}/_{16}$<br>134.9 | $^{7}/_{8}$<br>22.2 | $^{5}/_{8}$ –11<br>$^{5}/_{8}$ –11 | $1^{9}/_{32}$<br>32.6 | 8.00<br>3.64 | 7 890<br>35 100 | 5 220<br>23 200 |

### For metric shafts 20mm - 40mm

| Shaft dia d | Tapped-base unit designation | $A_1$ | H | $H_1$ | J | L | N | G | T | Mass | Basic adial load rating dynamic C r | static $C_0$ |
|---|---|---|---|---|---|---|---|---|---|---|---|---|
| mm | | in<br>mm | in<br>mm | in<br>mm | in<br>mm | in<br>mm | in<br>mm | in<br>mm | in<br>mm | lb<br>kg | lbf<br>N | lbf<br>N |
| 20 | ZTB20ZM | $1^{1}/_{2}$<br>38.1 | $2^{9}/_{16}$<br>65.1 | $^{15}/_{16}$<br>33.3 | 2<br>50.8 | $2^{5}/_{8}$<br>66.7 | $^{1}/_{2}$<br>12.7 | $^{3}/_{8}$ –16<br>$^{3}/_{8}$ –16 | $^{23}/_{32}$<br>18.3 | 1.80<br>0.82 | 2 860<br>12 700 | 1 470<br>6 550 |
| 25 | ZTB25ZM | $1^{1}/_{2}$<br>38.1 | $2^{13}/_{16}$<br>71.4 | $1^{7}/_{16}$<br>36.5 | 2<br>50.8 | 3<br>76.2 | $^{1}/_{2}$<br>12.7 | $^{3}/_{8}$ –16<br>$^{3}/_{8}$ –16 | $^{25}/_{32}$<br>19.8 | 2.00<br>0.91 | 3 150<br>14 000 | 1 750<br>7 800 |
| 30 | ZTB30ZM | $1^{1}/_{2}$<br>38.1 | $3^{3}/_{8}$<br>85.7 | $1^{11}/_{16}$<br>42.9 | 3<br>76.2 | $3^{7}/_{8}$<br>98.4 | $^{5}/_{8}$<br>15.9 | $^{7}/_{16}$ –14<br>$^{7}/_{16}$ –14 | $^{7}/_{8}$<br>22.2 | 3.50<br>1.59 | 4 380<br>19 500 | 2 520<br>11 200 |
| 35 | ZTB35ZM | $1^{7}/_{8}$<br>47.6 | $3^{3}/_{4}$<br>95.3 | $1^{7}/_{8}$<br>47.6 | $3^{1}/_{4}$<br>82.6 | $4^{1}/_{8}$<br>104.8 | $^{3}/_{4}$<br>19.1 | $^{1}/_{2}$ –13<br>$^{1}/_{2}$ –13 | 1<br>25.4 | 4.50<br>2.05 | 5 730<br>25 500 | 3 440<br>15 300 |
| 40 | ZTB40ZM | $1^{7}/_{8}$<br>47.6 | $3^{15}/_{16}$<br>100.0 | $1^{15}/_{16}$<br>49.2 | $3^{1}/_{2}$<br>88.9 | $4^{1}/_{2}$<br>114.3 | $^{3}/_{4}$<br>19.1 | $^{1}/_{2}$ –13<br>$^{1}/_{2}$ –13 | $1^{3}/_{16}$<br>30.0 | 6.00<br>2.73 | 6 900<br>30 700 | 4 270<br>19 000 |



* Metric units are supplied through the Made-To-Order (MTO) Program

## SPB cast stainless steel pillow block units

Stainless steel insert bearing
$XD_S$ series

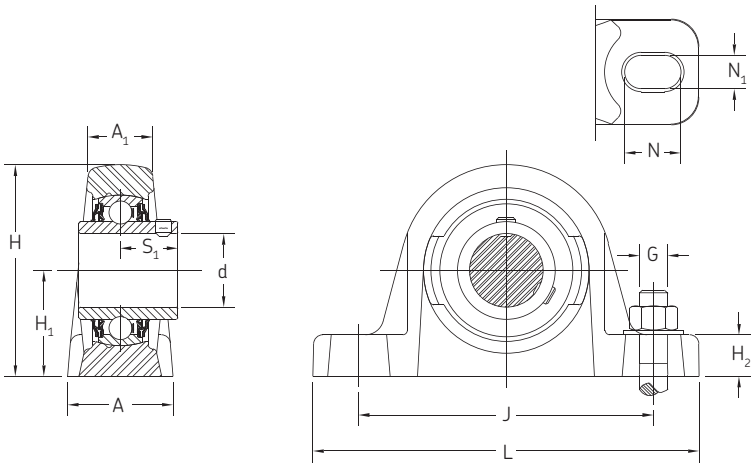


### For inch shafts $^3/_4$ – $1^1/_2$

| Shaft dia d | Pillow unit designation | A | $A_1$ | H | $H_1$ | $H_2$ | J Min | J Max | L | N | $N_1$ | G | $S_1$ | Basic radial load rating dynamic C | static $C_0$ |
|---|---|---|---|---|---|---|---|---|---|---|---|---|---|---|---|
| in | | in<br>mm | in<br>mm | in<br>mm | in<br>mm | in<br>mm | in<br>mm | in<br>mm | in<br>mm | in<br>mm | in<br>mm | in<br>mm | in<br>mm | lbf<br>N | lbf<br>N |
| $^3/_4$ | SPB012SS | $1^1/_4$<br>32.0 | $^3/_4$<br>19.0 | $4^{13}/_{32}$<br>111.9 | $1^5/_{16}$<br>33.3 | $^5/_8$<br>16.0 | $3^7/_{16}$<br>87.3 | $4^3/_{16}$<br>106.4 | 5<br>127.0 | $^{13}/_{16}$<br>20.5 | $^{29}/_{64}$<br>11.5 | $^3/_8$<br>10.0 | $^{23}/_{32}$<br>18.3 | 2430<br>10800 | 1470<br>6550 |
| 1 | SPB100SS | $1^7/_{16}$<br>36.0 | $^7/_8$<br>22.0 | $4^{57}/_{64}$<br>123.8 | $1^7/_{16}$<br>36.5 | $^5/_8$<br>16.0 | $3^{11}/_{16}$<br>93.7 | $4^5/_{16}$<br>109.5 | $5^1/_8$<br>130.0 | $^3/_4$<br>19.1 | $^{29}/_{64}$<br>11.5 | $^3/_8$<br>10.0 | $^{25}/_{32}$<br>19.8 | 2670<br>11900 | 1750<br>7800 |
| $1^3/_{16}$ | SPB103SS | $1^9/_{16}$<br>39.7 | 1<br>25.4 | $5^9/_{16}$<br>141.3 | $1^{11}/_{16}$<br>42.9 | $^{21}/_{32}$<br>16.5 | $4^1/_4$<br>108.0 | 5<br>127.0 | 6<br>152.4 | $^{15}/_{16}$<br>23.8 | $^9/_{16}$<br>14.3 | $^1/_2$<br>12.7 | $^7/_8$<br>22.2 | 3660<br>16300 | 2520<br>11200 |
| $1^1/_4$ | SPB104SSR | $1^9/_{16}$<br>39.7 | 1<br>25.4 | $5^9/_{16}$<br>141.3 | $1^{11}/_{16}$<br>42.9 | $^{21}/_{32}$<br>16.5 | $4^1/_4$<br>108.0 | 5<br>127.0 | 6<br>152.4 | $^{15}/_{16}$<br>23.8 | $^9/_{16}$<br>14.3 | $^1/_2$<br>12.7 | $^7/_8$<br>22.2 | 3660<br>16300 | 2520<br>11200 |
| $1^1/_4$ | SPB104SS | $1^3/_4$<br>44.5 | $1^1/_8$<br>28.6 | $6^1/_8$<br>155.6 | $1^7/_8$<br>47.6 | $^3/_4$<br>19.0 | $4^{11}/_{16}$<br>119.1 | $5^1/_4$<br>133.4 | $6^5/_{16}$<br>160.3 | $^{27}/_{32}$<br>21.4 | $^9/_{16}$<br>14.3 | $^1/_2$<br>12.7 | 1<br>25.4 | 4850<br>21600 | 3440<br>15300 |
| $1^3/_8$ | SPB106SS | $1^3/_4$<br>44.5 | $1^1/_8$<br>28.6 | $6^1/_8$<br>155.6 | $1^7/_8$<br>47.6 | $^3/_4$<br>19.0 | $4^{11}/_{16}$<br>119.1 | $5^1/_4$<br>133.4 | $6^5/_{16}$<br>160.3 | $^{27}/_{32}$<br>21.4 | $^9/_{16}$<br>14.3 | $^1/_2$<br>12.7 | 1<br>25.4 | 4850<br>21600 | 3440<br>15300 |
| $1^7/_{16}$ | SPB107SS | $1^3/_4$<br>44.5 | $1^1/_8$<br>28.6 | $6^1/_8$<br>155.6 | $1^7/_8$<br>47.6 | $^3/_4$<br>19.0 | $4^{11}/_{16}$<br>119.1 | $5^1/_4$<br>133.4 | $6^5/_{16}$<br>160.3 | $^{27}/_{32}$<br>21.4 | $^9/_{16}$<br>14.3 | $^1/_2$<br>12.7 | 1<br>25.4 | 4850<br>21600 | 3440<br>15300 |
| $1^1/_2$ | SPB108SS | $1^7/_8$<br>47.6 | $1^1/_4$<br>31.2 | $6^3/_4$<br>171.5 | $1^{15}/_{16}$<br>49.2 | $^3/_4$<br>19.0 | $4^{15}/_{16}$<br>125.4 | $5^3/_4$<br>146.0 | $6^7/_8$<br>174.6 | $^{31}/_{32}$<br>24.6 | $^9/_{16}$<br>14.3 | $^1/_2$<br>12.7 | $1^3/_{16}$<br>30.0 | 5550<br>24700 | 4270<br>19000 |

### For metric shafts 20mm - 40mm*

| Shaft dia d | Pillow unit designation | A | $A_1$ | H | $H_1$ | $H_2$ | J Min | J Max | L | N | $N_1$ | G | $S_1$ | Basic radial load rating dynamic C | static $C_0$ |
|---|---|---|---|---|---|---|---|---|---|---|---|---|---|---|---|
| in | | in<br>mm | in<br>mm | in<br>mm | in<br>mm | in<br>mm | in<br>mm | in<br>mm | in<br>mm | in<br>mm | in<br>mm | in<br>mm | in<br>mm | lbf<br>N | lbf<br>N |
| 20 | SPB20SS | $1^1/_4$<br>32.0 | $^3/_4$<br>19.0 | $4^{13}/_{32}$<br>111.9 | $1^5/_{16}$<br>33.3 | $^5/_8$<br>16.0 | $3^7/_{16}$<br>87.3 | $4^3/_{16}$<br>106.4 | 5<br>127.0 | $^{13}/_{16}$<br>20.5 | $^{29}/_{64}$<br>11.5 | $^3/_8$<br>10.0 | $^{23}/_{32}$<br>18.3 | 2430<br>10800 | 1470<br>6550 |
| 25 | SPB25SS | $1^7/_{16}$<br>36.0 | $^7/_8$<br>22.0 | $4^{57}/_{64}$<br>123.8 | $1^7/_{16}$<br>36.5 | $^5/_8$<br>16.0 | $3^{11}/_{16}$<br>93.7 | $4^5/_{16}$<br>109.5 | $5^1/_8$<br>130.0 | $^3/_4$<br>19.1 | $^{29}/_{64}$<br>11.5 | $^3/_8$<br>10.0 | $^{25}/_{32}$<br>19.8 | 2670<br>11900 | 1750<br>7800 |
| 30 | SPB30SS | $1^9/_{16}$<br>39.7 | 1<br>25.4 | $5^9/_{16}$<br>141.3 | $1^{11}/_{16}$<br>42.9 | $^{21}/_{32}$<br>16.5 | $4^1/_4$<br>108.0 | 5<br>127.0 | 6<br>152.4 | $^{15}/_{16}$<br>23.8 | $^9/_{16}$<br>14.3 | $^1/_2$<br>12.7 | $^7/_8$<br>22.2 | 3660<br>16300 | 2520<br>11200 |
| 35 | SPB35SS | $1^3/_4$<br>44.5 | $1^1/_8$<br>28.6 | $6^1/_8$<br>155.6 | $1^7/_8$<br>47.6 | $^3/_4$<br>19.0 | $4^{11}/_{16}$<br>119.1 | $5^1/_4$<br>133.4 | $6^5/_{16}$<br>160.3 | $^{27}/_{32}$<br>21.4 | $^9/_{16}$<br>14.3 | $^1/_2$<br>12.7 | 1<br>25.4 | 4850<br>21600 | 3440<br>15300 |
| 40 | SPB40SS | $1^7/_8$<br>47.6 | $1^1/_4$<br>31.2 | $6^3/_4$<br>171.5 | $1^{15}/_{16}$<br>49.2 | $^3/_4$<br>19.0 | $4^{15}/_{16}$<br>125.4 | $5^3/_4$<br>146.0 | $6^7/_8$<br>174.6 | $^{31}/_{32}$<br>24.6 | $^9/_{16}$<br>14.3 | $^1/_2$<br>12.7 | $1^3/_{16}$<br>30.0 | 5550<br>24700 | 4270<br>19000 |



* Metric units are supplied through the Made-To-Order (MTO) Program
MRC Marathon series mounted bearing units are greased and sealed for life. MRC does not recommend regreasing. However, in the event that regreasing is required, a stainless steel grease zerk is packaged with each unit.

## S2F cast stainless steel two-bolt flange units

Stainless steel insert bearing
$XD_S$ series

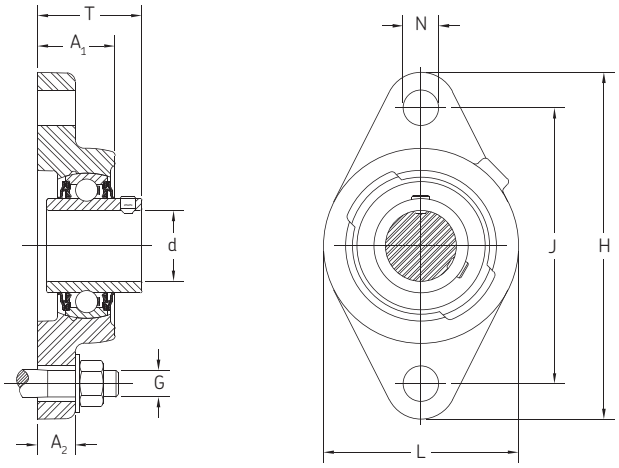


### For inch shafts $^3/_4$ – $1^1/_2$

| Shaft dia d | Flange unit designation | $A_1$ | $A_2$ | H | J | L | N | G | T | Basic radial load rating dynamic C | static $C_0$ |
|---|---|---|---|---|---|---|---|---|---|---|---|
| in | | in<br>mm | in<br>mm | in<br>mm | in<br>mm | in<br>mm | in<br>mm | in<br>mm | in<br>mm | lbf<br>N | lbf<br>N |
| $^3/_4$ | S2F012SS | $^{11}/_{64}$<br>25.8 | $^7/_{16}$<br>11.1 | $4^{13}/_{32}$<br>111.9 | $3^{17}/_{32}$<br>89.7 | $^{23}/_8$<br>60.3 | $^7/_{16}$<br>11.1 | $^3/_8$<br>10.0 | $^{19}/_{32}$<br>32.5 | 2430<br>10800 | 1470<br>6550 |
| 1 | S2F100SS | $1^5/_{32}$<br>29.4 | $^{17}/_{32}$<br>13.5 | $4^7/_8$<br>123.4 | $3^{57}/_{64}$<br>98.8 | $2^3/_4$<br>69.9 | $^1/_2$<br>12.7 | $^7/_{16}$<br>11.0 | $1^7/_{16}$<br>36.5 | 2670<br>11900 | 1750<br>7800 |
| $1^3/_{16}$ | S2F103SS | $1^{11}/_{32}$<br>34.1 | $^{17}/_{32}$<br>13.5 | $5^9/_{16}$<br>141.3 | $4^{19}/_{32}$<br>116.7 | $3^1/_8$<br>79.4 | $^1/_2$<br>12.7 | $^7/_{16}$<br>11.0 | $1^{21}/_{32}$<br>42.1 | 3660<br>16300 | 2520<br>11200 |
| $1^1/_4$ | S2F104SSR | $1^{11}/_{32}$<br>34.1 | $^{17}/_{32}$<br>13.5 | $5^9/_{16}$<br>141.3 | $4^{19}/_{32}$<br>116.7 | $3^1/_8$<br>79.4 | $^1/_2$<br>12.7 | $^7/_{16}$<br>11.0 | $1^{21}/_{32}$<br>42.1 | 3660<br>16300 | 2520<br>11200 |
| $1^1/_4$ | S2F104SS | $1^{13}/_{32}$<br>35.7 | $^9/_{16}$<br>14.3 | $6^1/_8$<br>155.6 | $5^1/_8$<br>130.2 | $3^5/_8$<br>92.1 | $^9/_{16}$<br>14.3 | $^1/_2$<br>12.7 | $1^{13}/_{16}$<br>46.0 | 4850<br>21600 | 3440<br>15300 |
| $1^3/_8$ | S2F106SS | $1^{13}/_{32}$<br>35.7 | $^9/_{16}$<br>14.3 | $6^1/_8$<br>155.6 | $5^1/_8$<br>130.2 | $3^5/_8$<br>92.1 | $^9/_{16}$<br>14.3 | $^1/_2$<br>12.7 | $1^{13}/_{16}$<br>46.0 | 4850<br>21600 | 3440<br>15300 |
| $1^7/_{16}$ | S2F107SS | $1^{13}/_{32}$<br>35.7 | $^9/_{16}$<br>14.3 | $6^1/_8$<br>155.6 | $5^1/_8$<br>130.2 | $3^5/_8$<br>92.1 | $^9/_{16}$<br>14.3 | $^1/_2$<br>12.7 | $1^{13}/_{16}$<br>46.0 | 4850<br>21600 | 3440<br>15300 |
| $1^1/_2$ | S2F108SS | $1^{17}/_{32}$<br>38.9 | $^9/_{16}$<br>14.3 | $6^3/_4$<br>171.5 | $5^{21}/_{32}$<br>143.7 | 4<br>101.6 | $^9/_{16}$<br>14.3 | $^1/_2$<br>12.7 | $2^3/_{32}$<br>53.0 | 5550<br>24700 | 4270<br>19000 |

### For metric shafts 20mm - 40mm*

| Shaft dia d | Flange unit designation | $A_1$ | $A_2$ | H | J | L | N | G | T | Basic radial load rating dynamic C | static $C_0$ |
|---|---|---|---|---|---|---|---|---|---|---|---|
| in | | in<br>mm | in<br>mm | in<br>mm | in<br>mm | in<br>mm | in<br>mm | in<br>mm | in<br>mm | lbf<br>N | lbf<br>N |
| 20 | S2F20SS | $1^1/_{64}$<br>25.8 | $^7/_{16}$<br>11.1 | $4^{13}/_{32}$<br>111.9 | $3^{17}/_{32}$<br>89.7 | $2^3/_8$<br>60.3 | $^7/_{16}$<br>11.1 | $^3/_8$<br>10.0 | $1^9/_{32}$<br>32.5 | 2430<br>10800 | 1470<br>6550 |
| 25 | S2F25SS | $1^5/_{32}$<br>29.4 | $^{17}/_{32}$<br>13.5 | $4^7/_8$<br>123.4 | $3^{57}/_{64}$<br>98.8 | $2^3/_4$<br>69.9 | $^1/_2$<br>12.7 | $^7/_{16}$<br>11.0 | $1^7/_{16}$<br>36.5 | 2670<br>11900 | 1750<br>7800 |
| 30 | S2F30SS | $1^{11}/_{32}$<br>34.1 | $^{17}/_{32}$<br>13.5 | $5^9/_{16}$<br>141.3 | $4^{19}/_{32}$<br>116.7 | $3^1/_8$<br>79.4 | $^1/_2$<br>12.7 | $^7/_{16}$<br>11.0 | $1^{21}/_{32}$<br>42.1 | 3660<br>16300 | 2520<br>11200 |
| 35 | S2F35SS | $1^{13}/_{32}$<br>35.7 | $^9/_{16}$<br>14.3 | $6^1/_8$<br>155.6 | $5^1/_8$<br>130.2 | $3^5/_8$<br>92.1 | $^9/_{16}$<br>14.3 | $^1/_2$<br>12.7 | $1^{13}/_{16}$<br>46.0 | 4850<br>21600 | 3440<br>15300 |
| 40 | S2F40SS | $1^{17}/_{32}$<br>38.9 | $^9/_{16}$<br>14.3 | $6^3/_4$<br>171.5 | $5^{21}/_{32}$<br>143.7 | 4<br>101.6 | $^9/_{16}$<br>14.3 | $^1/_2$<br>12.7 | $2^3/_{32}$<br>53.0 | 5550<br>24700 | 4270<br>19000 |



* Metric units are supplied through the Made-To-Order (MTO) Program
MRC Marathon series mounted bearing units are greased and sealed for life. MRC does not recommend regreasing. However, in the event that regreasing is required, a stainless steel grease zerk is packaged with each unit.

## S4F cast stainless steel four-bolt flange units

Stainless steel insert bearing
$XD_S$ series

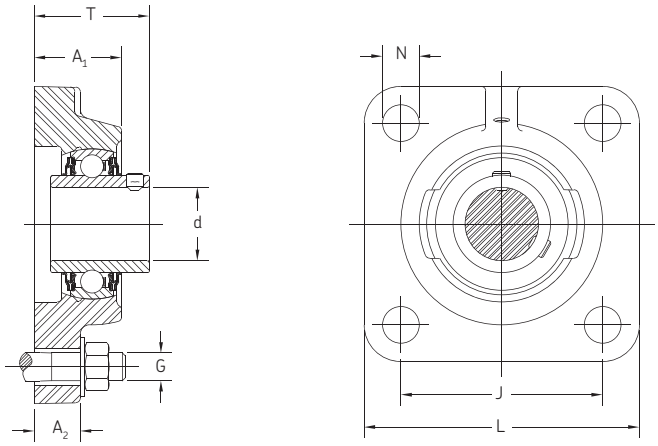


### For inch shafts $^3/_4$ – $1^1/_2$

| Shaft dia d | Flange unit designation | $A_1$ | $A_2$ | J | L | N | G | T | Basic radial load rating dynamic C | static $C_0$ |
|---|---|---|---|---|---|---|---|---|---|---|
| in | | in<br>mm | in<br>mm | in<br>mm | in<br>mm | in<br>mm | in<br>mm | in<br>mm | lbf<br>N | lbf<br>N |
| $^3/_4$ | S4F012SS | $1^1/_{64}$<br>25.8 | $^7/_{16}$<br>11.1 | $2^1/_2$<br>63.5 | $3^3/_8$<br>85.7 | $^7/_{16}$<br>11.1 | $^3/_8$<br>10.0 | $1^{15}/_{32}$<br>37.3 | 2430<br>10800 | 1470<br>6550 |
| 1 | S4F100SS | $1^5/_{32}$<br>29.4 | $^{17}/_{32}$<br>13.5 | $2^3/_4$<br>69.9 | $3^3/_4$<br>95.3 | $^{29}/_{64}$<br>11.5 | $^7/_{16}$<br>11.0 | $1^{17}/_{32}$<br>38.9 | 2670<br>11900 | 1750<br>7800 |
| $1^3/_{16}$ | S4F103SS | $1^{11}/_{32}$<br>34.1 | $^{17}/_{32}$<br>13.5 | $3^1/_4$<br>82.6 | $4^1/_4$<br>108.0 | $^1/_2$<br>12.7 | $^7/_{16}$<br>11.0 | $1^{21}/_{32}$<br>42.1 | 3660<br>16300 | 2520<br>11200 |
| $1^1/_4$ | S4F104SSR | 1 11/32<br>34.1 | $^{17}/_{32}$<br>13.5 | $3^1/_4$<br>82.6 | $4^1/_4$<br>108.0 | $^1/_2$<br>12.7 | $^7/_{16}$<br>11.0 | $1^{21}/_{32}$<br>42.1 | 3660<br>16300 | 2520<br>11200 |
| $1^1/_4$ | S4F104SS | $1^{13}/_{32}$<br>35.7 | $^9/_{16}$<br>14.3 | $3^5/_8$<br>92.1 | $4^5/_8$<br>117.5 | $^9/_{16}$<br>14.3 | $^1/_2$<br>12.7 | $1^{13}/_{16}$<br>46.0 | 4850<br>21600 | 3440<br>15300 |
| $1^3/_8$ | S4F106SS | $1^{13}/_{32}$<br>35.7 | $^9/_{16}$<br>14.3 | $3^5/_8$<br>92.1 | $4^5/_8$<br>117.5 | $^9/_{16}$<br>14.3 | $^1/_2$<br>12.7 | $1^{13}/_{16}$<br>46.0 | 4850<br>21600 | 3440<br>15300 |
| $1^7/_{16}$ | S4F107SS | $1^{13}/_{32}$<br>35.7 | $^9/_{16}$<br>14.3 | $3^5/_8$<br>92.1 | $4^5/_8$<br>117.5 | $^9/_{16}$<br>14.3 | $^1/_2$<br>12.7 | $1^{13}/_{16}$<br>46.0 | 4850<br>21600 | 3440<br>15300 |
| $1^1/_2$ | S4F108SS | $1^{17}/_{32}$<br>38.9 | $^9/_{16}$<br>14.3 | 4<br>101.6 | $5^1/_8$<br>130.2 | $^9/_{16}$<br>14.3 | $^1/_2$<br>12.7 | $2^3/_{32}$<br>53.2 | 5550<br>24700 | 4270<br>19000 |

### For metric shafts 20mm - 40mm*

| Shaft dia d | Flange unit designation | $A_1$ | $A_2$ | J | L | N | G | T | Basic radial load rating dynamic C | static $C_0$ |
|---|---|---|---|---|---|---|---|---|---|---|
| in | | in<br>mm | in<br>mm | in<br>mm | in<br>mm | in<br>mm | in<br>mm | in<br>mm | lbf<br>N | lbf<br>N |
| 20 | S4F20SS | $1^1/_{64}$<br>25.8 | $^7/_{16}$<br>11.1 | $2^1/_2$<br>63.5 | $3^3/_8$<br>85.7 | $^7/_{16}$<br>11.1 | $^3/_8$<br>10.0 | $1^{15}/_{32}$<br>37.3 | 2430<br>10800 | 1470<br>6550 |
| 25 | S4F25SS | $1^5/_{32}$<br>29.4 | $^{17}/_{32}$<br>13.5 | $2^3/_4$<br>69.9 | $3^3/_4$<br>95.3 | $^{29}/_{64}$<br>11.5 | $^7/_{16}$<br>11.0 | $1^{17}/_{32}$<br>38.9 | 2670<br>11900 | 1750<br>7800 |
| 30 | S4F30SS | $1^{11}/_{32}$<br>34.1 | $^{17}/_{32}$<br>13.5 | $3^1/_4$<br>82.6 | $4^1/_4$<br>108.0 | $^1/_2$<br>12.7 | $^7/_{16}$<br>11.0 | $1^{21}/_{32}$<br>42.1 | 3660<br>16300 | 2520<br>11200 |
| 35 | S4F35SS | $1^{13}/_{32}$<br>35.7 | $^9/_{16}$<br>14.3 | $3^5/_8$<br>92.1 | $4^5/_8$<br>117.5 | $^9/_{16}$<br>14.3 | $^1/_2$<br>12.7 | $1^{13}/_{16}$<br>46.0 | 4850<br>21600 | 3440<br>15300 |
| 40 | S4F40SS | $1^{17}/_{32}$<br>38.9 | $^9/_{16}$<br>14.3 | 4<br>101.6 | $5^1/_8$<br>130.2 | $^9/_{16}$<br>14.3 | $^1/_2$<br>12.7 | $2^3/_{32}$<br>53.2 | 5550<br>24700 | 4270<br>19000 |



* Metric units are supplied through the Made-To-Order (MTO) Program
MRC Marathon series mounted bearing units are greased and sealed for life. MRC does not recommend regreasing. However, in the event that regreasing is required, a stainless steel grease zerk is packaged with each unit.

## STB cast stainless steel tapped-base units

Stainless steel insert bearing
$XD_S$ series

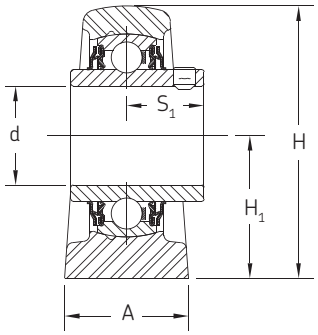


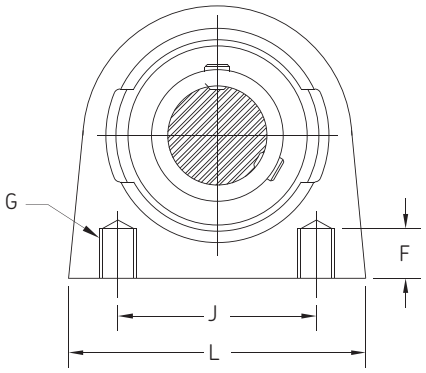


### For inch shafts $^3/_4$ – $1^1/_2$

| Shaft dia d | Tapped-base unit designation | $A_1$ | H | $H_1$ | J | L | F | G | $S_1$ | Basic radial load rating dynamic C | static $C_0$ |
|---|---|---|---|---|---|---|---|---|---|---|---|
| in | | in<br>mm | in<br>mm | in<br>mm | in<br>mm | in<br>mm | in<br>mm | UNC Threads | in<br>mm | lbf<br>N | lbf<br>N |
| $^3/_4$ | STB012SS | $1^1/_8$<br>28.6 | $2^1/_2$<br>63.5 | $1^5/_{16}$<br>33.3 | 2<br>50.8 | $2^5/_8$<br>66.7 | $^1/_2$<br>12.7 | $^3/_8$-16 | $^{23}/_{32}$<br>18.3 | 2430<br>10800 | 1470<br>6550 |
| 1 | STB100SS | $1^1/_4$<br>31.8 | $2^3/_4$<br>69.9 | $1^7/_{16}$<br>36.5 | 2<br>50.8 | 3<br>76.2 | $^1/_2$<br>12.7 | $^3/_8$-16 | $^{25}/_{32}$<br>19.8 | 2670<br>11900 | 1750<br>7800 |
| $1^3/_{16}$ | STB103SS | $1^1/_2$<br>38.1 | $3^1/_4$<br>82.6 | $1^{11}/_{16}$<br>42.9 | 3<br>76.2 | $3^7/_8$<br>98.4 | $^5/_8$<br>15.9 | $^7/_{16}$-14 | $^7/_8$<br>22.2 | 3660<br>16300 | 2520<br>11200 |
| $1^1/_4$ | STB104SSR | $1^1/_2$<br>38.1 | $3^1/_4$<br>82.6 | $1^{11}/_{16}$<br>42.9 | 3<br>76.2 | $3^7/_8$<br>98.4 | $^5/_8$<br>15.9 | $^7/_{16}$-14 | $^7/_8$<br>22.2 | 3660<br>16300 | 2520<br>11200 |
| $1^1/_4$ | STB104SS | $1^1/_2$<br>38.1 | $3^5/_8$<br>92.1 | $1^7/_8$<br>47.6 | $3^1/_4$<br>82.6 | $4^1/_8$<br>104.8 | 3/4<br>19.1 | $^1/_2$-13 | 1<br>25.4 | 4850<br>21600 | 3440<br>15300 |
| $1^3/_8$ | STB106SS | $1^1/_2$<br>38.1 | $3^5/_8$<br>92.1 | $1^7/_8$<br>47.6 | $3^1/_4$<br>82.6 | $4^1/_8$<br>104.8 | 3/4<br>19.1 | $^1/_2$-13 | 1<br>25.4 | 4850<br>21600 | 3440<br>15300 |
| $1^7/_{16}$ | STB107SS | $1^1/_2$<br>38.1 | $3^5/_8$<br>92.1 | $1^7/_8$<br>47.6 | $3^1/_4$<br>82.6 | $4^1/_8$<br>104.8 | $^3/_4$<br>19.1 | $^1/_2$-13 | 1<br>25.4 | 4850<br>21600 | 3440<br>15300 |
| $1^1/_2$ | STB108SS | $1^5/_8$<br>41.3 | $3^{15}/_{16}$<br>100.0 | $1^{15}/_{16}$<br>49.2 | $3^1/_2$<br>88.9 | $4^1/_2$<br>114.3 | $^3/_4$<br>19.1 | $^1/_2$-13 | $1^3/_{16}$<br>30.0 | 5550<br>24700 | 4270<br>19000 |

### For metric shafts 20mm - 40mm*

| Shaft dia d | Tapped-base unit designation | $A_1$ | H | $H_1$ | J | L | F | G | $S_1$ | Basic radial load rating dynamic C | static $C_0$ |
|---|---|---|---|---|---|---|---|---|---|---|---|
| in | | in<br>mm | in<br>mm | in<br>mm | in<br>mm | in<br>mm | in<br>mm | UNC Threads | in<br>mm | lbf<br>N | lbf<br>N |
| 20 | STB20SS | $1^1/_8$<br>28.6 | $2^1/_2$<br>63.5 | $1^{15}/_{16}$<br>33.3 | 2<br>50.8 | $2^5/_8$<br>66.7 | $^1/_2$<br>12.7 | $^3/_8$-16 | $^{23}/_{32}$<br>18.3 | 2430<br>10800 | 1470<br>6550 |
| 25 | STB25SS | $1^1/_4$<br>31.8 | $2^3/_4$<br>69.9 | $1^7/_{16}$<br>36.5 | 2<br>50.8 | 3<br>76.2 | $^1/_2$<br>12.7 | $^3/_8$-16 | $^{25}/_{32}$<br>19.8 | 2670<br>11900 | 1750<br>7800 |
| 30 | STB30SS | $1^1/_2$<br>38.1 | $3^1/_4$<br>82.6 | $1^{11}/_{16}$<br>42.9 | 3<br>76.2 | $3^7/_8$<br>98.4 | $^5/_8$<br>15.9 | $^7/_{16}$-14 | $^7/_8$<br>22.2 | 3660<br>16300 | 2520<br>11200 |
| 35 | STB35SS | $1^1/_2$<br>38.1 | $3^5/_8$<br>92.1 | $1^7/_8$<br>47.6 | $3^1/_4$<br>82.6 | $4^1/_8$<br>104.8 | $^3/_4$<br>19.1 | $^1/_2$-13 | 1<br>25.4 | 4850<br>21600 | 3440<br>15300 |
| 40 | STB40SS | $1^5/_8$<br>41.3 | $3^{15}/_{16}$<br>100.0 | $1^{15}/_{16}$<br>49.2 | $3^1/_2$<br>88.9 | $4^1/_2$<br>114.3 | $^3/_4$<br>19.1 | $^1/_2$-13 | $1^3/_{16}$<br>30.0 | 5550<br>24700 | 4270 |

19000



* Metric units are supplied through the Made-To-Order (MTO) Program
MRC Marathon series mounted bearing units are greased and sealed for life. MRC does not recommend regreasing. However, in the event that regreasing is required, a stainless steel grease zerk is packaged with each unit.

## Mounted unit

ZMaRC-coated insert bearings
Available with standard set-screw mounting or
eccentric locking collar mounting

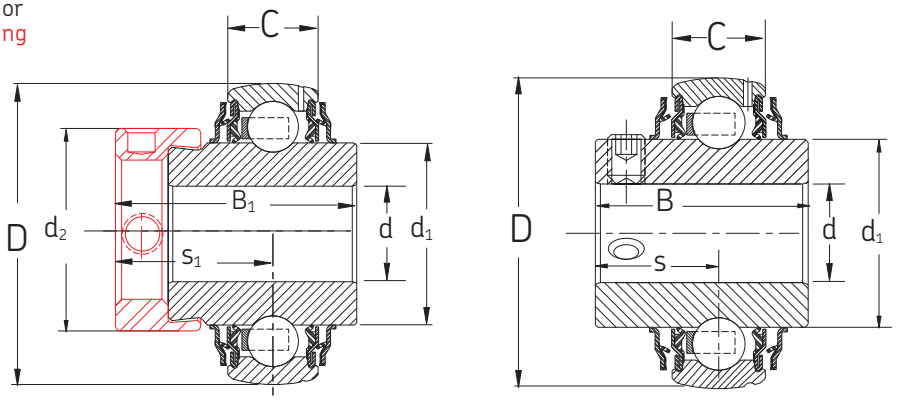


### For inch shafts $^{3}/_{4}$ – $1^{15}/_{16}$

| Insert bearing designation | Bore dia d | Outside dia D | Inner width B | $B_1$ | Outer width C | Basic radial load rating dynamic C | static $C_0$ | $d_1$ | $d_2$ | S | $S_1$ | Max fillet rad.[1] | Mass double set-screw | lock-collar |
|---|---|---|---|---|---|---|---|---|---|---|---|---|---|---|
| | in<br>mm | in<br>mm | in<br>mm | in<br>mm | in<br>mm | lbf<br>N | lbf<br>N | in<br>mm | in<br>mm | in<br>mm | in<br>mm | lb<br>kg | lb<br>kg | lb<br>kg |
| RRZ1012BRR | $^{3}/_{4}$<br>19.05 | 1.8504<br>47 | 1.220<br>31 | | 0.5512<br>14 | 2 860<br>12 700 | 1 470<br>6 500 | 1.110<br>28.20 | | 0.500<br>12.70 | | 0.024<br>0.60 | 0.31<br>0.14 | |
| RRZ1015BRR | $^{15}/_{16}$<br>23.81 | 2.0472<br>52 | 1.343<br>34.10 | | 0.5906<br>15 | 3 150<br>14 000 | 1 750<br>7 800 | 1.328<br>33.74 | | 0.563<br>14.30 | | 0.024<br>0.60 | 0.42<br>0.19 | |
| RRZ1100BRR-L* | 1<br>25.4 | 2.0472<br>52 | 1.343<br>34.10 | 1.7500<br>44.4 | 0.5906<br>15 | 3 150<br>14 000 | 1 750<br>7 800 | 1.328<br>33.74 | 1.4725<br>37.4 | 0.563<br>14.30 | 1.059<br>26.9 | 0.024<br>0.60 | 0.37<br>0.17 | 0.53<br>0.24 |
| RRZ1102BRR | $1^{1}/_{8}$<br>28.58 | 2.4409<br>62 | 1.500<br>38.10 | | 0.7087<br>18 | 4 380<br>19 500 | 2 520<br>11 200 | 1.563<br>39.70 | | 0.626<br>15.90 | | 0.024<br>0.60 | 0.66<br>0.30 | |
| RRZ1103BRR-L* | $1^{3}/_{16}$<br>30.16 | 2.4409<br>62 | 1.500<br>38.10 | 1.7638<br>44.8 | 0.7087<br>18 | 4 380<br>19 500 | 2 520<br>11 200 | 1.563<br>39.70 | 1.7402<br>44.2 | 0.626<br>15.90 | 1.185<br>30.1 | 0.024<br>0.60 | 0.60<br>0.27 | 0.79<br>0.36 |
| RRZ104BRR2 | $1^{1}/_{4}$<br>31.75 | 2.4409<br>62 | 1.500<br>38.10 | | 0.7087<br>18 | 4 380<br>19 500 | 2 520<br>11 200 | 1.563<br>39.70 | | 0.626<br>15.90 | | 0.024<br>0.60 | 0.55<br>0.25 | |
| RRZ1104BRR-L* | $1^{1}/_{4}$<br>31.75 | 2.8346<br>72 | 1.688<br>42.88 | 2.0000<br>51.1 | 0.7480<br>19 | 5 730<br>25 500 | 3 440<br>15 300 | 1.815<br>46.10 | 2.0000<br>51.1 | 0.689<br>17.50 | 1.272<br>32.3 | 0.039<br>1.00 | 1.00<br>0.46 | 1.31<br>0.59 |
| RRZ1107BRR-L* | $1^{7}/_{16}$<br>36.51 | 2.8346<br>72 | 1.688<br>42.88 | 2.0000<br>51.1 | 0.7480<br>19 | 5 730<br>25 500 | 3 440<br>15 300 | 1.815<br>46.10 | 2.0000<br>51.1 | 0.689<br>17.50 | 1.374<br>34.9 | 0.039<br>1.00 | 0.84<br>0.38 | 1.21<br>0.55 |
| RRZ1108BRR | $1^{1}/_{2}$<br>38.10 | 3.1496<br>80 | 1.938<br>49.23 | | 0.8268<br>21 | 6 900<br>30 700 | 4 270<br>19 000 | 2.039<br>51.80 | | 0.748<br>19 | | 0.039<br>1.00 | 1.30<br>0.59 | |
| RRZ1115BRR-L* | $1^{15}/_{16}$<br>49.20 | 3.5433<br>90 | 2.031<br>51.60 | 2.4688<br>62.7 | 0.8661<br>22 | 7 890<br>35 100 | 5 220<br>23 200 | 2.461<br>62.51 | 2.6575<br>67.5 | 0.748<br>19 | 1.500<br>38.1 | 0.039<br>1.00 | 1.55<br>0.71 | 2.09<br>0.95 |

### For metric shafts 20mm - 40mm

| Insert bearing designation | Bore dia d | Outside dia D | Inner width B | Outer width C | Basic radial load rating dynamic C | static $C_0$ | $d_1$ | S | Max fillet rad.[1] | Mass |
|---|---|---|---|---|---|---|---|---|---|---|
| | in<br>mm | in<br>mm | in<br>mm | in<br>mm | lbf<br>N | lbf<br>N | in<br>mm | in<br>mm | in<br>mm | lb<br>kg |
| RRZ20BRR | 0.7874<br>20 | 1.8504<br>47 | 1.220<br>31 | 0.5512<br>14 | 2 860<br>12 700 | 1 470<br>6 550 | 1.110<br>28.20 | 0.500<br>12.70 | 0.024<br>0.60 | 0.31<br>0.14 |
| RRZ25BRR | 0.9843<br>25 | 2.0472<br>52 | 1.343<br>34.1 | 0.5906<br>15 | 3 150<br>14 000 | 1 750<br>7 800 | 1.328<br>33.74 | 0.563<br>14.30 | 0.024<br>0.60 | 0.40<br>0.18 |
| RRZ30BRR | 1.1811<br>30 | 2.4409<br>62 | 1.500<br>38.1 | 0.7087<br>18 | 4 380<br>19 500 | 2 520<br>11 200 | 1.563<br>39.70 | 0.626<br>15.90 | 0.024<br>0.60 | 0.60<br>0.27 |
| RRZ35BRR | 1.3780<br>35 | 2.8346<br>72 | 1.688<br>42.9 | 0.7480<br>19 | 5 730<br>25 500 | 3 440<br>15 300 | 1.815<br>46.10 | 0.689<br>17.50 | 0.039<br>1.00 | 1.00<br>0.46 |
| RRZ40BRR | 1.5748<br>40 | 3.1496<br>80 | 1.938<br>49.2 | 0.7480<br>19 | 6 900<br>30 700 | 4 270<br>19 000 | 2.039<br>51.80 | 0.748<br>19.00 | 0.039<br>1.00 | 1.20<br>0.55 |

[1] Fillet radius indicates the maximum fillet radius on the shaft which bearing corner will clear.

## Mounted unit
Stainless steel insert bearing
Set-screw locking

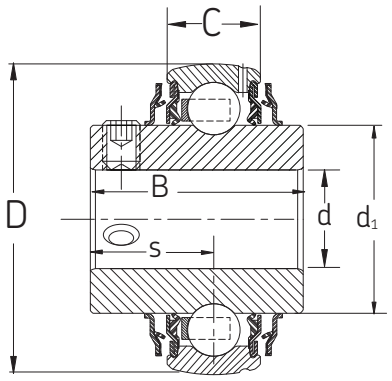


### For inch shafts $^3/_4$ – $1^1/_2$

| Insert bearing designation | Bore dia d | Outside dia D | Inner width B | Outer width C | Basic radial load rating dynamic C | static $C_0$ | $d_1$ | S | Max fillet rad.[1] | Mass |
|---|---|---|---|---|---|---|---|---|---|---|
| | in<br>mm | in<br>mm | in<br>mm | in<br>mm | lbf<br>N | lbf<br>N | in<br>mm | in<br>mm | in<br>mm | lb<br>kg |
| RRH1012BRR | $^3/_4$ | 1.8504 | 1.220 | 0.5512 | 2 380 | 1 470 | 1.110 | 0.500 | 0.024 | 0.31 |
| | 19.05 | 47 | 31 | 14 | 10 600 | 6 500 | 28.20 | 12.70 | 0.60 | 0.14 |
| RRH1100BRR | 1 | 2.0472 | 1.343 | 0.5906 | 2 520 | 1 750 | 1.328 | 0.563 | 0.024 | 0.37 |
| | 25.4 | 52 | 34.10 | 15 | 11 200 | 7 800 | 33.74 | 14.30 | 0.60 | 0.17 |
| RRH1103BRR | $1^3/_{16}$ | 2.4409 | 1.500 | 0.7087 | 3 510 | 2 520 | 1.563 | 0.626 | 0.024 | 0.60 |
| | 30.16 | 62 | 38.10 | 18 | 15 600 | 11 200 | 39.70 | 15.90 | 0.60 | 0.27 |
| RRH104BRR2 | $1^1/_4$ | 2.4409 | 1.500 | 0.7087 | 3 510 | 2 520 | 1.563 | 0.626 | 0.024 | 0.55 |
| | 31.75 | 62 | 38.10 | 18 | 15 600 | 11 200 | 39.70 | 15.90 | 0.60 | 0.25 |
| RRH1104BRR | $1^1/_4$ | 2.8346 | 1.688 | 0.7480 | 4 560 | 3 440 | 1.815 | 0.689 | 0.039 | 1.00 |
| | 31.75 | 72 | 42.88 | 19 | 20 300 | 15 300 | 46.10 | 17.50 | 1.00 | 0.46 |
| RRH1106BRR | $1^3/_8$ | 2.8346 | 1.688 | 0.7480 | 4 560 | 3 440 | 1.815 | 0.689 | 0.039 | 0.90 |
| | 34.93 | 72 | 42.88 | 19 | 20 300 | 15 300 | 46.10 | 17.50 | 1.00 | 0.41 |
| RRH1107BRR | $1^7/_{16}$ | 2.8346 | 1.688 | 0.7480 | 4 560 | 3 440 | 1.815 | 0.689 | 0.039 | 0.84 |
| | 36.51 | 72 | 42.88 | 19 | 20 300 | 15 300 | 46.10 | 17.50 | 1.00 | 0.38 |
| RRH1108BRR | $1^1/_2$ | 3.1496 | 1.938 | 0.8268 | 5 550 | 4 270 | 2.039 | 0.748 | 0.039 | 1.30 |
| | 38.10 | 80 | 49.23 | 21 | 24 700 | 19 000 | 51.80 | 19.00 | 1.00 | 0.59 |

### For metric shafts 20mm - 40mm

| Insert bearing designation | Bore dia d | Outside dia D | Inner width B | Outer width C | Basic radial load rating dynamic C | static $C_0$ | $d_1$ | S | Max fillet rad.[1] | Mass |
|---|---|---|---|---|---|---|---|---|---|---|
| | in<br>mm | in<br>mm | in<br>mm | in<br>mm | lbf<br>N | lbf<br>N | in<br>mm | in<br>mm | in<br>mm | lb<br>kg |
| RRH20BRR | 0.7874<br>20 | 1.8504<br>47 | 1.220<br>31 | 0.5512<br>14 | 2 430<br>10 800 | 1 470<br>6 550 | 1.110<br>28.20 | 0.500<br>12.70 | 0.024<br>0.60 | 0.31<br>0.14 |
| RRH25BRR | 0.9843<br>25 | 2.0472<br>52 | 1.343<br>34.1 | 0.5906<br>15 | 2 670<br>11 900 | 1 750<br>7 800 | 1.328<br>33.74 | 0.563<br>14.30 | 0.024<br>0.60 | 0.40<br>0.18 |
| RRH30BRR | 1.1811<br>30 | 2.4409<br>62 | 1.500<br>38.1 | 0.7087<br>18 | 3 660<br>16 300 | 2 520<br>11 200 | 1.563<br>39.70 | 0.626<br>15.90 | 0.024<br>0.60 | 0.60<br>0.27 |
| RRH35BRR | 1.3780<br>35 | 2.8346<br>72 | 1.688<br>42.9 | 0.7480<br>19 | 4 850<br>21 600 | 3 440<br>15 300 | 1.815<br>46.10 | 0.689<br>17.50 | 0.039<br>1.00 | 1.00<br>0.46 |
| RRH40BRR | 1.5748<br>40 | 3.1496<br>80 | 1.938<br>49.2 | 0.7480<br>19 | 5 550<br>24 700 | 4 270<br>19 000 | 2.039<br>51.80 | 0.748<br>19 | 0.039<br>1.00 | 1.20<br>0.55 |

[1] Fillet radius indicates the maximum fillet radius on the shaft which bearing corner will clear.

# Marathon submersible plane bearing units (Supplied through the MTO Program)

## Set-screw locking

MRC submersible plane bearing units are suitable for applications, which are constantly exposed to or submerged in moisture. When normal anti-friction bearings fail because of grease washout or corrosion, MRC submersible plane bearings are the best choice to keep rotating equipment running smoothly. The 316 stainless steel inner sleeve offers wear resistance as well as corrosion resistance. The high performance polymer outer ring allows the bearing to operate at moderate speeds without the need for lubrication since the polymer material is self-lubricated. Since the polymer material is the friction-reducing component, no grease is required for proper performance. And since frequent regreasing is the typical solution when trying to extend the service life of a bearing in severe operating environments, excessive grease purging is no longer a problem. The insert bearing will not catastrophically fail; it wears and becomes loose in the bore, indicating it needs to be replaced.
The polymer material can withstand continuous temperatures up to 150° F and tolerates higher temperatures during washdown. The recommended Marathon housing material for this insert is either the composite or cast stainless steel. In addition, the insert bearing is approved for direct food contact by the USDA / FDA in meat, poultry, and dairy applications.

### For inch shafts $^{3}/_{4}$ – $1^{15}/_{16}$ (metric inserts can be supplied through the MTO program)

| Insert bearing designation | Shaft dia d | D | B | C | S | Max speed* | Max load* | Radial load (fr) x speed (n)* | Mass |
|---|---|---|---|---|---|---|---|---|---|
| | in<br>mm | in<br>mm | in<br>mm | in<br>mm | in<br>mm | rpm | lbs | lbs x rpm | lb<br>kg |
| RRP1012BPL | $^{3}/_{4}$<br>19.1 | 1.8504<br>47.0 | 1.4843<br>37.7 | 0.9219<br>23.4 | 0.5630<br>14.3 | 250 | 625 | 3 900 | 0.3<br>0.14 |
| RRP1100BPL | 1<br>25.4 | 2.0472<br>52.0 | 1.5472<br>39.3 | 0.9219<br>23.4 | 0.6260<br>15.9 | 190 | 875 | 4 200 | 0.4<br>0.18 |
| RRP1102BPL | $1^{1}/_{8}$<br>28.6 | 2.4409<br>62.0 | 1.8307<br>46.5 | 1.0787<br>27.4 | 0.750<br>19.1 | 150 | 1 150 | 4 900 | 0.6<br>0.27 |
| RRP1103BPL | $1^{3}/_{16}$<br>30.2 | 2.4409<br>62.0 | 1.8307<br>46.5 | 1.0787<br>27.4 | 0.750<br>19.1 | 150 | 1 150 | 4 900 | 0.6<br>0.27 |
| RRP104BPL2 | $1^{1}/_{4}$<br>31.8 | 2.4409<br>62.0 | 1.8307<br>46.5 | 1.0787<br>27.4 | 0.750<br>19.1 | 150 | 1 150 | 4 900 | 0.6<br>0.27 |
| RRP1104BPL | $1^{1}/_{4}$<br>31.8 | 2.8346<br>72.0 | 2.0472<br>52.0 | 1.1102<br>28.2 | 0.9375<br>23.8 | 130 | 1 450 | 5 600 | 0.8<br>0.36 |
| RRP1107BPL | $1^{7}/_{16}$<br>36.5 | 2.8346<br>72.0 | 2.0472<br>52.0 | 1.1102<br>28.2 | 0.9375<br>23.8 | 130 | 1 450 | 5 600 | 0.8<br>0.36 |
| RRP1108BPL | $1^{1}/_{2}$<br>38.1 | 3.1496<br>80.0 | 2.2323<br>56.7 | 1.2638<br>32.1 | 0.9685<br>24.6 | 120 | 1 900 | 6 100 | 1.0<br>0.45 |
| RRP1115BPL | $1^{15}/_{16}$<br>49.2 | 3.5433<br>90.0 | 2.2953<br>58.3 | 1.2638<br>32.1 | 1.0315<br>26.2 | 100 | 2 500 | 6 300 | 1.3<br>0.59 |

Plane bearing capacity is based on the heat generation, which is directly related to speed versus applied load. The "radial load x speed" column above provides the relationship between load versus speed in order to evaluate the bearing suitability. If the application conditions exceed any of the three factors above, different polymer materials can be selected to meet the application needs.

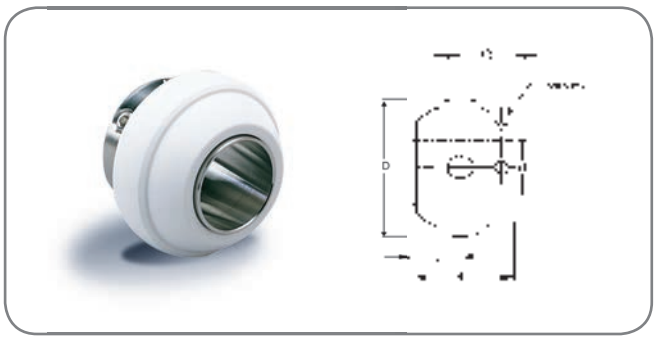

# Marathon hi-temp plane bearing units (Supplied through the MTO Program)

## Set-screw locking

MRC hi-temp units are fitted with high temperature plane bearing inserts that can withstand consistent temperatures up to 500° F. When normal anti-friction bearings cannot handle the heat, Marathon hi-temp units are a great solution to keep rotating equipment running smoothly. The 316 stainless steel inner ring and 304 stainless steel outer ring offer wear resistance as well as corrosion resistance. The high performance polymer sleeve material allows the bearing to operate at higher speeds compared to typical plane bearings.

Since the polymer material is the friction-reducing component, no grease is required for proper performance. Therefore, they are maintenance free and there is no issue about excessive grease purging which is usually a problem when trying to extend the service life of a bearing in severe operating environments. In the event of premature wear, the insert bearing will not catastrophically fail but will exhibit looseness indicating that the bearing needs to be replaced. The plane bearing inserts can be assembled into either the Marathon ZMaRC-coated cast iron or cast stainless steel housings to meet most application requirements for high temperature duty. In addition, the units meet USDA approval for direct contact in meat, poultry, and dairy applications.

### For inch shafts $^{3}/_{4}$ – $1^{15}/_{16}$ (metric inserts can be supplied through the MTO program)

| Insert bearing designation | Shaft dia d | D | B | C | S | Max speed* | Max load* | Radial load (fr) x speed (n)* | Mass |
|---|---|---|---|---|---|---|---|---|---|
| | in<br>mm | in<br>mm | in<br>mm | in<br>mm | in<br>mm | rpm | lbs | lbs x rpm | lb<br>kg |
| RRS1012BBL | $^{3}/_{4}$<br>19.1 | 1.8504<br>47.0 | 1.4843<br>37.7 | 0.9219<br>23.4 | 0.5630<br>14.3 | 2 000 | 2 100 | 179 000 | 0.5<br>0.23 |
| RRS1100BBL | 1<br>25.4 | 2.0472<br>52.0 | 1.5472<br>39.3 | 0.9219<br>23.4 | 0.6260<br>15.9 | 1 500 | 3 000 | 190 000 | 0.7<br>0.32 |
| RRS1102BBL | $1^{1}/_{8}$<br>28.6 | 2.4409<br>62.0 | 1.8307<br>46.5 | 1.0787<br>27.4 | 0.750<br>19.1 | 1 350 | 4 000 | 226 000 | 1.1<br>0.50 |
| RRS1103BBL | $1^{3}/_{16}$<br>30.2 | 2.4409<br>62.0 | 1.8307<br>46.5 | 1.0787<br>27.4 | 0.750<br>19.1 | 1 350 | 4 000 | 226 000 | 1.1<br>0.50 |
| RRS104BBL2 | $1^{1}/_{4}$<br>31.8 | 2.4409<br>62.0 | 1.8307<br>46.5 | 1.0787<br>27.4 | 0.750<br>19.1 | 1 350 | 4 000 | 226 000 | 1.1<br>0.50 |
| RRS1104BBL | $1^{1}/_{4}$<br>31.8 | 2.8346<br>72.0 | 2.0472<br>52.0 | 1.1102<br>28.2 | 0.9375<br>23.8 | 1 200 | 5 100 | 262 000 | 1.7<br>0.77 |
| RRS1107BBL | $1^{7}/_{16}$<br>36.5 | 2.8346<br>72.0 | 2.0472<br>52.0 | 1.1102<br>28.2 | 0.9375<br>23.8 | 1 200 | 5 100 | 262 000 | 1.7<br>0.77 |
| RRS1108BBL | $1^{1}/_{2}$<br>38.1 | 3.1496<br>80.0 | 2.2323<br>56.7 | 1.2638<br>32.1 | 0.9685<br>24.6 | 1 000 | 6 700 | 286 000 | 2.5<br>1.14 |
| RRS1115BBL | $1^{15}/_{16}$<br>49.2 | 3.5433<br>90.0 | 2.2953<br>58.3 | 1.2638<br>32.1 | 1.0315<br>26.2 | 800 | 9 000 | 298 000 | 3.3<br>1.50 |

Plane bearing capacity is based on the heat generation, which is directly related to speed versus applied load. The "radial load x speed" column above provides the relationship between load versus speed in order to evaluate the bearing suitability. If the application conditions exceed any of the three factors above, different polymer materials can be selected to meet the application needs.

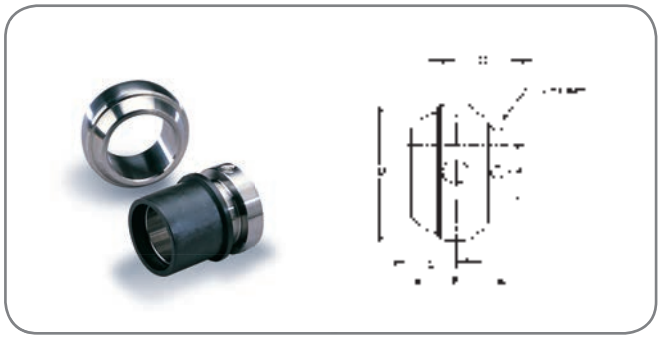

**Visit www.skfusa.com/mrc to download CAD drawings of MRC bearings**

# SKF hi-temp ball bearing units
## (Supplied through the MTO Program)

### Set-screw locking

SKF hi-temp ball bearing units are fitted with antifriction bearings that can withstand consistent temperatures up to 650° F. When normal anti-friction bearings seize, SKF hi-temp units are a great solution to keep rotating equipment running smoothly. Their increased radial internal clearance allows the bearing to expand without seizing at extreme temperatures. Manganese phosphated rings and black oxide flingers provide protection against corrosion. Their special graphite cage provides small quantities of graphite powder during rotation to adequately lubricate the rolling surfaces, making the unit maintenance free. And, since no lubrication is required, there is significant lubricant savings, there are no messy piles of grease that collect below the unit from continuous greasing, and there are not toxic fumes produced by the grease at the maximum operating temperature range.

Because of the special graphite cage and increased radial internal clearance, SKF hi-temp ball bearing units are designed to be operated up to approximately 100 rpm. In addition, the static load rating below is based on an operating temperature of 300° F. The rating gets reduced as the operating temperatures increase up to 650° F. The SKF hi-temp ball bearing units utilize the very effective MRC ZMaRC coating for the cast iron housings to provide corrosion protection. The units are available in four housing styles; pillow block, 2-bolt flange, 4-bolt flange, and tapped base. The insert bearings are shown below. The complete unit part number includes the basic housing style prefix, followed by the shaft diameter in inches, and finally the suffix "TF/VA228". Ex.: 1-1/2" pillow block for extreme operating temperatures would be SY 1.1/2 TF/VA228.

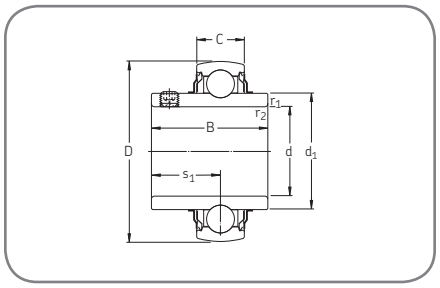




| Dimensions | | | | | | | Basic static load rating | Radial internal clearance | | Mass | Designation |
|---|---|---|---|---|---|---|---|---|---|---|---|
| d | D | B | C | $d_1$ | $s_1$ | $r_{1,2}$ min | C0 | min | max | | |
| mm<br>in | | | | | | | N<br>lbf | | | kg<br>lbs | – |
| | 47 | 31 | 14 | 28.2 | 18.3 | 0.6 | 6,550 | 56 | 96 | 0.14 | YAR 204-012-2FW/VA201 |
| 3/4 | 1.8504 | 1.2205 | 0.5512 | 1.1102 | 0.7205 | 0.0236 | 1,473 | 0.0022 | 0.0038 | 0.3086 | YAR 204-012-2FW/VA228 |
| | 52 | 34.1 | 15 | 33.7 | 19.8 | 0.6 | 7,800 | 60 | 105 | 0.17 | YAR 205-100-2FW/VA201 |
| 1 | 2.0472 | 1.3425 | 0.5906 | 1.3268 | 0.7795 | 0.0236 | 1,754 | 0.0024 | 0.0041 | 0.3748 | YAR 205-100-2FW/VA228 |
| | 62 | 38.1 | 18 | 39.7 | 22.2 | 0.6 | 11,200 | 60 | 105 | 0.28 | YAR 206-103-2FW/VA201 |
| 1 3/16 | 2.4409 | 1.5 | 0.7087 | 1.563 | 0.874 | 0.0236 | 2,518 | 0.0024 | 0.0041 | 0.6173 | YAR 206-103-2FW/VA228 |
| | 72 | 42.9 | 19 | 46.1 | 25.4 | 1 | 15,300 | 80 | 130 | 0.41 | YAR 207-104-2FW/VA201 |
| 1 1/4 | 2.8346 | 1.689 | 0.748 | 1.815 | 1 | 0.0394 | 3,440 | 0.0031 | 0.0051 | 0.9039 | YAR 207-104-2FW/VA228 |
| | 80 | 49.2 | 21 | 51.8 | 30.2 | 1 | 19,000 | 80 | 130 | 0.55 | YAR 208-108-2FW/VA201 |
| 1 1/2 | 3.1496 | 1.937 | 0.8268 | 2.0394 | 1.189 | 0.0394 | 4,271 | 0.0031 | 0.0051 | 1.2125 | YAR 208-108-2FW/VA228 |
| | 85 | 49.2 | 22 | 56.8 | 30.2 | 1 | 21,600 | 90 | 290 | 0.6 | YAR 209-112-2FW/VA201 |
| 1 3/4 | 3.3465 | 1.937 | 0.8661 | 2.2362 | 1.189 | 0.0394 | 4,856 | 0.0035 | 0.0114 | 1.3228 | YAR 209-112-2FW/VA228 |
| | 90 | 51.6 | 22 | 62.5 | 32.6 | 1 | 23,200 | 90 | 145 | 0.69 | YAR 210-115-2FW/VA201 |
| 1 15/16 | 3.5433 | 2.0315 | 0.8661 | 2.4606 | 1.2835 | 0.0394 | 5,216 | 0.0035 | 0.0057 | 1.5212 | YAR 210-115-2FW/VA228 |
| | 100 | 55.6 | 25 | 69.1 | 33.4 | 1 | 29,000 | 110 | 180 | 0.94 | YAR 211-200-2FW/VA201 |
| 2 | 3.937 | 2.189 | 0.9843 | 2.7205 | 1.315 | 0.0394 | 6,519 | 0.0043 | 0.0071 | 2.0723 | YAR 211-200-2FW/VA228 |
| | 110 | 65.1 | 26 | 75.6 | 39.7 | 1.5 | 36,000 | 110 | 180 | 1.3 | YAR 212-207-2FW/VA201 |
| 2 7/16 | 4.3307 | 2.563 | 1.0236 | 2.9764 | 1.563 | 0.0591 | 8,093 | 0.0043 | 0.0071 | 2.866 | YAR 212-207-2FW/VA228 |

# Made-To-Order products for the food processing industry

### Low backing height pillow block (CPL–ZM or SS)

Size range:
$^3/_4$ – $1^1/_2$ inches, 20 mm – 40 mm
Insert bearing:
ZMaRC coated or stainless steel

These units have a lower backing height than standard pillow blocks while the base bolt center distance, bolt size, insert bearing and load ratings remain the same. The overall height and base thickness are slightly smaller. These units are non-regreasable but can be furnished with grease fittings on special order. A regreasable unit is denoted by adding a "G" suffix to the unit part number.

Mounting and center height interchangeable with the following:

| | |
|---|---|
| AMI | UCLP |
| Dodge | P2B-SC |
| Fafnir | YAK |
| Hub City | PB250 |
| Link Belt | PL3 |
| McGill | CL-25 |
| Sealmaster | NPL |

### Low profile 2-bolt flange unit (C2L–ZM or SS)

Size range:
$^3/_4$ – $1^7/_{16}$ inches, 20 mm – 35 mm
Insert bearing:
ZMaRC coated or stainless steel

These units are smaller than a standard 2-bolt flange unit but have the same insert bearing and load ratings. They are used where space is limited. The housing bolt holes are round to accept round machine bolts. They are non-regreasable but can be furnished with grease fittings on special order. A regreasable unit is denoted by adding a "G" suffix to the unit part number.

Mounting interchangeable with the following:

| | |
|---|---|
| Dodge | LFT-SC |
| Hub City | FB160 |
| McGill | FBS2-25 |

### Hanger units (SHU–SS)

Size range:
$^3/_4$ – $1^1/_2$ inches, 20 mm – 40 mm
Insert bearing: stainless steel

These units are used on screw conveyors and include a stainless steel housing tapped for a straight pipe thread. These units are non-regreasable but grease fittings can be furnished on special order. A regreasable unit is denoted by adding a "G" suffix to the unit part number.

Mounting interchangeable with the following:

| | |
|---|---|
| AMI | UCECH, UCHPL |
| Dodge | SCHB |
| McGill | MCHB |
| Sealmaster | SCHB |

### 3-bolt flange unit (C3F–ZM or SS)

Size range:
$^3/_4$ – $1^7/_{16}$ inches, 20 mm – 35 mm
Insert bearing:
ZMaRC coated or stainless steel

These units are non-regreasable and are applied where space constraints require a compact unit with sufficient strength for the application. The insert bearing and load ratings are the same as a standard unit with the same shaft diameter. The housing bolt holes are round to accept round machine bolts. A grease fitting can be furnished on special order. A regreasable unit is denoted by adding a "G" suffix to the unit part number.

Mounting interchangeable with the following:

| | |
|---|---|
| AMI | BTM |
| Dodge | LF-SC |
| Hub City | FBI150 |
| Sealmaster | LF |

### 4-bolt piloted flange unit (CPF–ZM or SS)

Size range:
$^3/_4$ – $1^1/_2$ inches, 20 mm – 40 mm
Insert bearing:
ZMaRC coated or stainless steel

These are non-regreasable units which have an accurately machined piloting diameter to position the unit in the bore of the mounting surface, eliminating the need for any additional adjustments. The insert bearings and load ratings are the same as standard units with the same shaft diameter. A grease fitting can be furnished on special order. A regreasable unit is denoted by adding a "G" suffix to the unit part number.

Mounting interchangeable with the following:

| | |
|---|---|
| AMI | UCFCS |
| Dodge | FC-SC |
| Hub City | FC350 |
| McGill | PFC4-25 |
| Sealmaster | SFC |

Other shaft sizes may be available on special order.

**Contact MRC at 1-800-MRC-7000 regarding pricing, availability or technical service for all Marathon series products, or for information on regreasable units.**

# Marathon series nomenclature

## CPB 103 ZM

### Housing

**CPB** - Gray composite pillow block

**ZPB** - ZMaRC-coated cast iron pillow block

**SPB** - Cast stainless steel pillow block

**C2F** - Gray composite 2-bolt flange

**Z2F** - ZMaRC-coated cast iron 2-bolt flange

**S2F** - Cast stainless steel 2-bolt flange

**C4F** - Gray composite 4-bolt flange

**Z4F** - ZMaRC-coated cast iron 4-bolt flange

**S4F** - Cast stainless steel 4-bolt flange

**CTB** - Gray composite tapped-base pillow block

**ZTB** - ZMaRC-coated cast iron tapped-base pillow block

**STB** - Cast stainless steel tapped-base pillow block

**CBF** - Gray composite 3-bolt bracket flange

**CTN** - Gray composite narrow-slot take-up

**CTW** - Gray composite wide-slot take-up

### Shaft size

**Inches:**

First digit: number of inches

Second and third digits: number of sixteenths of an inch

**Example:** 103 indicates $1^{3}/_{16}$ (unit)

**Metric:**

First two digits: number of millimeters

**Example:** 25 indicates 25 millimeters

### Insert bearing

**L** - Lock collar bearing unit

**ZM** - ZMaRC coated

**SS** - Stainless steel

**G** - Relubricatable bearing unit

**ZMR** - ZMaRC-coated insert bearing, with a $1^{1}/_{4}$" bore, fitted into a housing that usually accommodates a $1^{3}/_{16}$" insert bearing

**SSR** - Stainless steel insert bearing, with a $1^{1}/_{4}$" bore, fitted into a housing that usually accommodates a $1^{3}/_{16}$" insert bearing

**HT** - High temperature plane bearing

**SB** - Submersible plane bearing

**HTR** - High temperature insert bearing with a $1^{1}/_{4}$" bore, fitted into a housing that usually accommodates a $1^{3}/_{16}$" insert bearing

**SBR** - Submersible insert bearing with a $1^{1}/_{4}$" bore, fitted into a housing that usually accommodates a $1^{3}/_{16}$" insert bearing

# Marathon series tolerances and dimensional data

**Insert bearing bore tolerance and radial clearance**

| Bearing bore diameter | | inch $^{3}/_{4}$ | 1 | $1^{1}/_{8}$ | $1^{1}/_{16}$ | $1^{1}/_{4}$ | $1^{3}/_{8}$ | $1^{7}/_{16}$ | $1^{1}/_{2}$ | $1^{15}/_{16}$ | mm 20 | 25 | 30 | 35 | 40 |
|---|---|---|---|---|---|---|---|---|---|---|---|---|---|---|---|
| Bore tolerance -.0000 | in | +.0007 | +.0007 | +.0008 | +.0008 | +.0008 | +.0008 | +.0008 | +.0008 | +.0008 | +.0007 | +.0007 | +.0008 | +.0008 | +.0008 |
| | mm | +.018 | +.018 | +.020 | +.020 | +.020 | +.020 | +.020 | +.020 | +.020 | +.018 | +.018 | +.020 | +.020 | +.020 |
| Radial clearance | in | .0005–.0011 | | 0006–.0013 | | | | | | .007–.0014 | .0005–.0011 | | .0006–.0013 | | |
| | mm | .013–.028 | | .015–.033 | | | | | | .018–.036 | .013–.028 | | .015–.033 | | |

**Shaft diameter tolerances**

| Shaft diameter in. | Tolerance in. |
|---|---|
| up to $1^{15}/_{16}$ | +0.0000 / -0.0005 |
| 2–4 | +0.0000 / -0.0010 |

For stainless steel insert bearings (RRH series), the above tolerances are especially critical because of the bearing material properties. Undersized shafting, excessive set-screw tightening, and severe environmental conditions can result in excessive ring distortion which can effect the performance of the bearing. Therefore, it is highly recommended that the proper set-screw torque and shaft diameter tolerance be used (see assembly instructions on pages 40 and 41).

## Marathon series product range

Stainless steel single row deep groove (SRDG) ball bearings

MRC stainless steel (SRDG) ball bearings are used in fish, poultry and other food processing applications. Examples of popular applications include automatic filleting and sizing equipment aboard fishing trawlers, and evisceration equipment in poultry plants.

MRC stainless steel SRDG ball bearings exhibit significantly longer life than standard bearings in a wide range of demanding applications.

All MRC stainless steel SRDG ball bearings can also be specified with a solid lubricant pack that prevents grease washout during washdowns and helps protect against contamination in harsh environments.

For equivalent load and life calculations see page 52 and 53 in the MRC Engineering Handbook.






FFST, KSFFST, SFFST
**two shields**



ZZST, KSZZST, SZZST
**two seals**

| MRC bearing number | Bore d | | Outside diameter D | | Width B | | Fillet radius[1] $r_a$ | | $Zd^2$ | | Basic radial load rating Dynamic $C$[2] | | Static $C_0$ | | Speed rating Open and shielded grease | Open and shielded oil | Single & double sealed grease |
|---|---|---|---|---|---|---|---|---|---|---|---|---|---|---|---|---|---|
| | mm | in | mm | in | mm | in | mm | in | mm | in | N | lbf | N | lbf | RPM | RPM | RPM |
| 38ZZST | 8.0 | .3150 | 22.0 | .8661 | 7.0 | .2756 | .30 | .012 | 110 | .17 | 2 600 | 585 | 1 360 | 306 | 36 000 | 43 000 | 23 000 |
| R2ST | 3.2 | .1250 | 9.5 | .3750 | 4.0 | .1562 | .30 | .012 | 19 | .03 | 250 | 56 | 120 | 27 | 75 000 | 91 000 | 52 000 |
| R2FFST | 3.2 | .1250 | 9.5 | .3750 | 4.0 | .1562 | .30 | .012 | 19 | .03 | 250 | 56 | 120 | 27 | 75 000 | 91 000 | 52 000 |
| R3FFST | 4.8 | .1875 | 12.7 | .5000 | 5.0 | .1960 | .30 | .012 | 39 | .06 | 765 | 172 | 490 | 110 | 57 000 | 69 000 | 40 000 |
| R3ZZST | 4.8 | .1875 | 12.7 | .5000 | 5.0 | .1960 | .30 | .012 | 39 | .06 | 765 | 172 | 490 | 110 | 57 000 | 69 000 | 40 000 |
| R4FFST | 6.4 | .2500 | 15.9 | .6250 | 5.0 | .1960 | .30 | .012 | 45 | .07 | 1 180 | 266 | 620 | 139 | 44 000 | 54 000 | 31 000 |
| R6FFST | 9.5 | .3750 | 22.2 | .8750 | 7.1 | .2812 | .41 | .016 | 110 | .17 | 2 660 | 597 | 1 340 | 301 | 31 000 | 38 000 | 21 000 |
| R6ZZST | 9.5 | .3750 | 22.2 | .8750 | 7.1 | .2812 | .41 | .016 | 110 | .17 | 2 660 | 597 | 1 340 | 301 | 31 000 | 38 000 | 21 000 |
| R8ST | 12.7 | .5000 | 28.6 | 1.1250 | 6.4 | .2500 | .41 | .016 | 181 | .28 | 4 060 | 912 | 2 400 | 540 | 24 000 | 29 000 | 16 000 |
| R8FFST | 12.7 | .5000 | 28.6 | 1.1250 | 7.9 | .3125 | .41 | .016 | 181 | .28 | 4 060 | 912 | 2 400 | 540 | 24 000 | 29 000 | 16 000 |
| R8ZZST | 12.7 | .5000 | 28.6 | 1.1250 | 7.9 | .3125 | .41 | .016 | 181 | .28 | 4 060 | 912 | 2 400 | 540 | 24 000 | 29 000 | 16 000 |
| R10ZZST | 15.9 | .6250 | 34.9 | 1.3750 | 8.7 | .3438 | .79 | .031 | 226 | .35 | 4 840 | 1 090 | 3 250 | 731 | 18 000 | 22 000 | 13 000 |
| R12FFST | 19.1 | .7500 | 41.3 | 1.6250 | 11.1 | .4375 | .79 | .031 | 361 | .56 | 7 490 | 1 680 | 5 100 | 1 150 | 16 000 | 19 000 | 11 000 |
| R12ZZST | 19.1 | .7500 | 41.3 | 1.6250 | 11.1 | .4375 | .79 | .031 | 361 | .56 | 7 490 | 1 680 | 5 100 | 1 150 | 16 000 | 19 000 | 11 000 |
| 101KSZZST | 12.0 | .4724 | 28.0 | 1.1024 | 8.0 | .3125 | .30 | .012 | 181 | .28 | 4 060 | 912 | 2 360 | 530 | 26 000 | 32 000 | 17 000 |
| 102KSZZST | 15.0 | .5906 | 32.0 | 1.2598 | 9.0 | .3543 | .30 | .012 | 206 | .32 | 4 470 | 1 010 | 2 850 | 640 | 22 000 | 28 000 | 14 000 |
| 103KSZZST | 17.0 | .6693 | 35.0 | 1.3780 | 10.0 | .3937 | .30 | .012 | 226 | .35 | 4 840 | 1 090 | 3 250 | 730 | 19 000 | 24 000 | 13 000 |
| 104KSZZST | 20.0 | .7874 | 42.0 | 1.6535 | 12.0 | .4724 | .64 | .025 | 361 | .56 | 7 490 | 1 680 | 5 000 | 1 120 | 17 000 | 20 000 | 11 000 |
| 105KSZZST | 25.0 | .9843 | 47.0 | 1.8504 | 12.0 | .4724 | .64 | .025 | 458 | .71 | 8 960 | 2 010 | 6 550 | 1 470 | 15 000 | 18 000 | 9 500 |
| 106KSZZST | 30.0 | 1.1811 | 55.0 | 2.1654 | 13.0 | .5118 | 1.00 | .040 | 561 | .87 | 9 470 | 2 130 | 7 390 | 1 660 | 12 000 | 15 000 | 8 000 |
| 200SZZST | 10.0 | .3937 | 30.0 | 1.1811 | 9.0 | .3543 | .64 | .025 | 181 | .28 | 4 060 | 912 | 2 360 | 531 | 24 000 | 30 000 | 17 000 |
| 201SST | 12.0 | .4724 | 32.0 | 1.2598 | 10.0 | .3937 | .64 | .025 | 252 | .39 | 5 510 | 1 240 | 3 100 | 697 | 22 000 | 28 000 | 15 000 |
| 201SZZST | 12.0 | .4724 | 32.0 | 1.2598 | 10.0 | .3937 | .64 | .025 | 252 | .39 | 5 510 | 1 240 | 3 100 | 697 | 22 000 | 28 000 | 15 000 |
| 202SST | 15.0 | .5906 | 35.0 | 1.3780 | 11.0 | .4331 | .64 | .025 | 290 | .45 | 6 240 | 1 400 | 3 250 | 843 | 19 000 | 24 000 | 13 000 |
| 202SFFST | 15.0 | .5906 | 35.0 | 1.3780 | 11.0 | .4331 | .64 | .025 | 290 | .45 | 6 240 | 1 400 | 3 250 | 843 | 19 000 | 24 000 | 13 000 |
| 202SZZST | 15.0 | .5906 | 35.0 | 1.3780 | 11.0 | .4331 | .64 | .025 | 290 | .45 | 6 240 | 1 400 | 3 250 | 843 | 19 000 | 24 000 | 13 000 |
| 203SFFST | 17.0 | .6693 | 40.0 | 1.5748 | 12.0 | .4724 | .64 | .025 | 361 | .56 | 7 650 | 1 720 | 4 750 | 1 070 | 17 000 | 20 000 | 12 000 |
| 203SZZST | 17.0 | .6693 | 40.0 | 1.5748 | 12.0 | .4724 | .64 | .025 | 361 | .56 | 7 650 | 1 720 | 4 750 | 1 070 | 17 000 | 20 000 | 12 000 |
| 204SST | 20.0 | .7874 | 47.0 | 1.8504 | 14.0 | .5512 | 1.00 | .040 | 503 | .78 | 10 200 | 2 280 | 6 550 | 1 470 | 15 000 | 18 000 | 10 000 |
| 204SZZST | 20.0 | .7874 | 47.0 | 1.8504 | 14.0 | .5512 | 1.00 | .040 | 503 | .78 | 10 200 | 2 280 | 6 550 | 1 470 | 15 000 | 18 000 | 10 000 |
| 205SFFST | 25.0 | .9843 | 52.0 | 2.0472 | 15.0 | .5906 | 1.00 | .040 | 568 | .88 | 11 200 | 2 520 | 7 800 | 1 750 | 12 000 | 15 000 | 8 500 |
| 205SZZST | 25.0 | .9843 | 52.0 | 2.0472 | 15.0 | .5906 | 1.00 | .040 | 568 | .88 | 11 200 | 2 520 | 7 800 | 1 750 | 12 000 | 15 000 | 8 500 |
| 206SST | 30.0 | 1.1811 | 62.0 | 2.4409 | 16.0 | .6299 | 1.00 | .040 | 819 | 1.27 | 15 600 | 3 510 | 11 200 | 2 520 | 10 000 | 13 000 | 7 500 |
| 206SFFST | 30.0 | 1.1811 | 62.0 | 2.4409 | 16.0 | .6299 | 1.00 | .040 | 819 | 1.27 | 15 600 | 3 510 | 11 200 | 2 520 | 10 000 | 13 000 | 7 500 |
| 206SZZST | 30.0 | 1.1811 | 62.0 | 2.4409 | 16.0 | .6299 | 1.00 | .040 | 819 | 1.27 | 15 600 | 3 510 | 11 200 | 2 520 | 10 000 | 13 000 | 7 500 |
| 207SZZST | 35.0 | 1.3780 | 72.0 | 2.8346 | 17.0 | .6693 | 1.00 | .040 | 1 111 | 1.72 | 20 500 | 4 610 | 15 300 | 3 440 | 9 000 | 11 000 | 6 300 |
| 304SZZST | 20.0 | .7874 | 52.0 | 2.0472 | 15.0 | .5906 | 1.00 | .040 | 632 | .98 | 12 700 | 2 860 | 7 800 | 1 750 | 13 000 | 16 000 | 9 500 |
| 305SZZST | 25.0 | .9843 | 62.0 | 2.4409 | 17.0 | .6693 | 1.00 | .040 | 864 | 1.34 | 17 000 | 3 810 | 10 800 | 2 430 | 11 000 | 14 000 | 7 500 |

1) Fillet radius indicates maximum fillet radius on shaft or in housing which bearing corner will clear.
2) Rating for one million revolutions or 500 hours at 33 1/3 RPM.
3) Listed values are for a pressed stainless steel cage; ABEC.1. The speed ratings have been determined through historical application and practice.

# Assembly instructions for MRC Marathon bearing units

## Step 1

Remove any burrs on the shaft with emery cloth or a fine file. Wipe the shaft with a clean piece of cloth. Check the shaft diameter to ensure it meets the tolerances shown below.

**Shaft diameter tolerances**

| Shaft diameter in | Tolerance in |
|---|---|
| up to $1^{15}/_{16}$ | +0.0000 / -0.0005 |
| 2-4 | +0.0000 / -0.0010 |

## Step 2

Back out all the set-screws of the double set-screw unit to clear the shaft and slide the unit into position on the shaft with the side opposite the shaft locking device leading.

## Step 3

Make sure the housing base and mating surfaces are clean and free of any debris or burrs. Ensure that the supporting surface is flat. If the housing requires shims for adjustment, the shims MUST extend the full length and width of the base. Bolt the housing securely to the support. (see Table A for maximum recommended tightening torques for composite housings.) Note: For composite pillow block and flanged housings, a thick flat stainless steel washer should always be installed between the bolt head and mounting base to properly distribute the clamping force.

## Step 4

### ZMaRC double set-screw inserts

Before the set-screws are tightened, reinspect the position to make sure the housing did not shift when the base bolts were tightened. Tighten each set-screw alternately with the proper hex head socket wrench until they stop turning and the hex head socket wrench starts to spring. Reference Table B for maximum recommended set-screw tightening torque values and wrench dimensions. These values should not be exceeded.

### ZMaRC lock collar Inserts

Push the eccentric locking collar in position on the inner ring extension and tighten with a quick jerk in the main direction of rotation of the shaft and then tighten fully using a spanner wrench or hammer and drift. Tighten the set-screw with the proper hex head socket wrench until they stop turning and the hex head socket wrench starts to spring. Reference Table C for maximum recommended set-screw tightening torque values and wrench dimensions. These values should not be exceeded.

### Stainless steel inserts

Before the set-screws are tightened, reinspect the position to make sure the housing did not shift when the base bolts were tightened. Remove the set-screws and apply a bonding agent to the set-screw's threads such as LocTite® and insert the set-screws back into the inner ring. Tighten each set-screw alternately with the proper hex head socket wrench until they stop turning and the hex head socket wrench starts to spring. Reference Table D for maximum recommended set-screw tightening torque values and wrench dimensions. These values should not be exceeded.

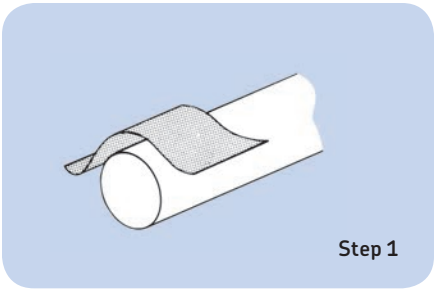
Step 1

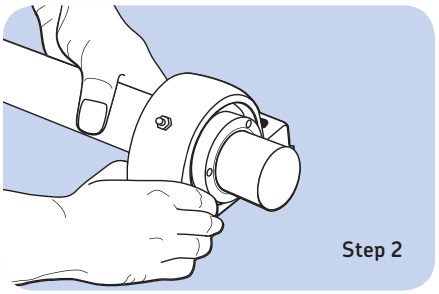
Step 2

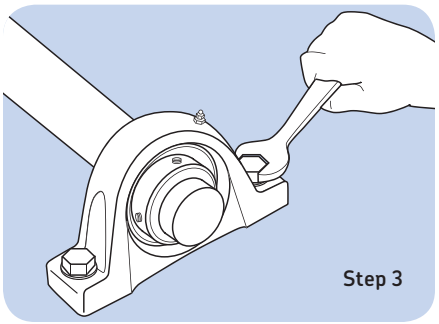
Step 3

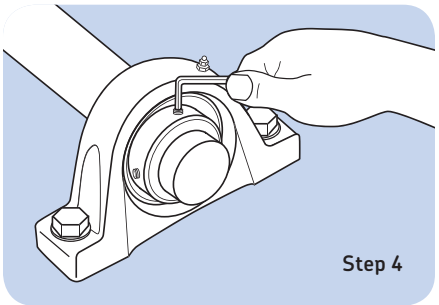
Step 4

**Table A**

Composite housings maximum bolt tightening torques

| Shaft size | Pillow block | | | 2- and 4- bolt flange | | | Tapped base | |
|---|---|---|---|---|---|---|---|---|
| | Bolt diameter | | Max. tightening torque | Bolt diameter | | Max. tightening torque | Bolt size UNC thread | Max. tightening |
| | in. | mm | in.-lbs. | in. | mm | in.-lbs. | in.in.-lbs | |
| 3/4" | 3/8 | 10.0 | 390 | 3/8 | 10.0 | 430 | 3/8-16 | 130 |
| 1" | 3/8 | 10.0 | 430 | 3/8 | 10.0 | 430 | 3/8-16 | 130 |
| 1 1/8" | 1/2 | 12.7 | 430 | 3/8 | 10.0 | 430 | 7/16-14 | 150 |
| 1 3/16" | 1/2 | 12.7 | 430 | 3/8 | 10.0 | 430 | 7/16-14 | 150 |
| 1 1/4R" | 1/2 | 12.7 | 430 | 3/8 | 10.0 | 430 | 7/16-14 | 150 |
| 1 1/4" | 1/2 | 12.7 | 475 | 1/2 | 12.7 | 430 | 1/2-13 | 170 |
| 1 7/16" | 1/2 | 12.7 | 475 | 1/2 | 12.7 | 430 | 1/2-13 | 170 |
| 1 1/2" | 1/2 | 12.7 | 520 | 1/2 | 12.7 | 520 | 1/2-13 | 170 |
| 1 15/16" | 5/8 | 15.9 | 560 | 5/8 | 15.9 | 520 | 5/8-11 | 200 |
| 20 mm | 3/8 | 10.0 | 390 | 3/8 | 10.0 | 430 | 3/8-16 | 130 |
| 25 mm | 3/8 | 10.0 | 430 | 3/8 | 10.0 | 430 | 3/8-16 | 130 |
| 30 mm | 1/2 | 12.7 | 430 | 3/8 | 10.0 | 430 | 7/16-14 | 150 |
| 35 mm | 1/2 | 12.7 | 475 | 1/2 | 12.7 | 430 | 1/2-13 | 170 |
| 40 mm | 1/2 | 12.7 | 520 | 1/2 | 12.7 | 520 | 1/2-13 | 170 |

**Table B**

ZMaRC double set-screw insert bearing set-screw specifications (RRZ-BRR)

| Shaft size | Set-screw size | Hex wrench size | Max tightening torque in.-lbs. |
|---|---|---|---|
| 3/4" | 1/4"-28 x 1/4" | 1/8" | 87 |
| 1" | 1/4"-28 x 1/4" | 1/8" | 87 |
| 1 1/8" | 1/4"-28 x 1/4" | 1/8" | 87 |
| 1 3/16" | 1/4"-28 x 1/4" | 1/8" | 87 |
| 1 1/4R" | 1/4"-28 x 1/4" | 1/8" | 87 |
| 1 1/4" | 5/16"-24 x 5/16" | 5/32" | 165 |
| 1 7/16" | 5/16"-24 x 5/16" | 5/32" | 165 |
| 1 1/2" | 5/16"-24 x 5/16" | 5/32" | 165 |
| 1 15/16" | 3/8"-24 x 3/8" | 3/16" | 290 |
| 20 mm | M6 x 0.75mm x 5mm | 3 mm | 87 |
| 25 mm | M6 x 0.75mm x 5mm | 3 mm | 87 |
| 30 mm | M6 x 0.75mm x 5mm | 3 mm | 87 |
| 35 mm | M6 x 0.75mm x 7mm | 3 mm | 165 |
| 40 mm | M8 x 1mm x 7mm | 4 mm | 165 |

### Mounting the insert bearing into the housing

Position the bearing 90° from its normal position and insert it into the slots in the housing, making sure that the set-screws do not interfere with the edge of the housing bore. Then swivel the bearing into position using a piece of tubing through the bore. If the housing has a relubrication fitting, the set-screw side of the bearing should be matched to the side of the housing with the insert slots. In order to ensure that the relubrication fitting and lubrication holes line up, the initial misalignment should not exceed 5 degrees.

**Table C**

ZMaRC lock collar insert bearing set-screw specifications (RRZ-BRR-L)

| Shaft size | Set-screw size | Hex wrench size | Max tightening torque in.-lbs. |
|---|---|---|---|
| 1" | 1/4"-28 x 3/16" | 1/8" | 35 |
| 1 3/16" | 5/16"-24 x 1/4" | 5/32" | 80 |
| 1 1/4" | 3/8"-24 x 3/8" | 3/16" | 290 |
| 1 7/16" | 3/8"-24 x 3/8" | 3/16" | 290 |
| 1 15/16" | 3/8"-24 x 3/8" | 3/16" | 290 |

**Table D**

Stainless steel insert bearing set-screw specifications (RRH-BRR)

| Shaft size | Set-screw size | Hex wrench size | Max tightening torque in.-lbs. |
|---|---|---|---|
| 3/4" | 1/4"-28 x 3/16" | 1/8" | 35 |
| 1" | 1/4"-28 x 3/16" | 1/8" | 35 |
| 1 3/16" | 1/4"-28 x 3/16" | 1/8" | 35 |
| 1 1/4R" | 1/4"-28 x 3/16" | 1/8" | 35 |
| 1 1/4" | 5/16"-24 x 1/4" | 5/32" | 80 |
| 1 3/8" | 5/16"-24 x 1/4" | 5/32" | 80 |
| 1 7/16" | 5/16"-24 x 1/4" | 5/32" | 80 |
| 1 1/2" | 5/16"-24 x 1/4" | 5/32" | 80 |
| 20 mm | M6 x 0.75mm x 5mm | 3 mm | 35 |
| 25 mm | M6 x 0.75mm x 5mm | 3 mm | 35 |
| 30 mm | M6 x 0.75mm x 5mm | 3 mm | 35 |
| 35 mm | M6 x 0.75mm x 7mm | 3 mm | 35 |
| 40 mm | M8 x 1mm x 7mm | 4 mm | 80 |

SKF USA Inc.
Lansdale, PA 19446, USA

Call toll free
1-800-MRC-7000
267-436-6000

www.skfusa.com/mrc

® MRC, Marathon and ZMaRC are registered trademark of SKF USA Inc.

The contents of this publication are the copyright of the publisher and may not be reproduced (even extracts) unless prior written permission is granted. Every care has been taken to ensure the accuracy of the information contained in this publication but no liability can be accepted for any loss or damage whether direct, indirect or consequential arising out of use of the information contained herein.

© 2001 SKF USA Inc. **Publication M660-710** (3M/AN 9/2014) Version 9/2014 Printed in U.S.A.