SKF bearing housings and roller bearing units



SKF mobile apps

SKF mobile apps are available from both Apple App Store and Google Play. These apps provide useful information and allow you to make critical calculations, providing SKF Knowledge Engineering at your fingertips.

Register your catalogue

You can get updates for this catalogue via email if you register at skf.com/catalogues.

Apple App Store

Google Play

® SKF, CARB, KMT, KMTA, SKF Explorer and SYSTEM 24 are registered trademarks of the SKF Group.

™ Apple is a trademark of Apple Inc., registered in the US and other countries.

Google Play is a trademark of Google Inc.

Superbolt is a registered trademark of the Nord-Lock Group.

© SKF Group 2015
The contents of this catalogue are the copyright of the publisher and may not be reproduced (even extracts) unless permission is granted. Every care has been taken to ensure the accuracy of the information contained in this catalogue but no liability can be accepted for any loss or damage whether direct, indirect or consequential arising out of the use of the information contained herein.

PUB BU/P1 13186/1 EN · February 2015

This catalogue supersedes publication number 13186 EN.

Certain image(s) used under license from Shutterstock.com

SKF bearing housings – overview, selection and application recommendations

Split plummer block housings – SNL 2, 3, 5 and 6 series

Split plummer block housings – SE 2, 3, 5 and 6 series

Split plummer block housings – SNLN 30 series

Split plummer block housings – SNL 30, 31 and 32 series

Split plummer block housings – SED 30, 31, 32 and 39 series

Split plummer block housings – SONL series

Split pillow blocks – SAF and SAW series

Split plummer blocks – SDAF series

Non-split plummer block housings and take-up housings – SBD and THD series

Flanged housings – FNL series

Two-bearing housings – PD series

Housings for paper machines – SBFN, SBPN and SDM series

Split plummer block housings for converters in steel making – SKND series

Trunnion bearing housings for grinding mills – FSDR..K series

Metric roller bearings units – SYNT and FYNT series

Inch roller bearing units – SYE, SYR, FYE and FYR series

Indexes

Notice
For important updates and changes to this catalogue, go to skf.com/errata

SKF bearing housings and roller bearing units



SKF bearing housings and roller bearing units

Unit conversions **10**
Foreword **11**
This is SKF **16**
SKF – the knowledge engineering company **18**

1 SKF bearing housings – overview, selection and application recommendations . . . **21**
Basics 22
Terminology 22
Overview of SKF bearing housings 27
Assortment 27
Housing materials 29
Selecting a housing 35
Environmental conditions 36
Custom painting / corrosivity category 36
Sealing solutions 36
The SKF three-barrier solution 39
Design considerations 40
Bearing systems 40
Load carrying ability 44
Specifications for shafts and housing support surfaces 45
Lubrication 46
Grease selection 46
Initial grease fill 46
Relubrication 46
SKF tools and products 47
Mounting 50
Preparations prior to mounting 50
SKF tools and products 50
Lifting housings 50
Attachment bolt tightening 50
Using shims 50
Using locating (stabilizing) rings 50
Installing seals 51
Inspection and condition monitoring 52
Storage 52

2 Split plummer block housings – SNL 2, 3, 5 and 6 series **55**
Designations 57
Standard housing design 59
Housing variants 62
Sealing solutions 64
Using sealed bearings 68
Special seals 70
Design considerations 72
Lubrication 78
Mounting 82
Condition monitoring 83
Accessories 84
Ordering information 84
Product tables
2.1 SNL and SE plummer block housings for bearings on an adapter sleeve, metric shafts 86
2.2 SNL and SE plummer block housings for bearings on an adapter sleeve, inch shafts 100
2.3 SNL and SE plummer block housings for bearings on a cylindrical seat 120

3 Split plummer block housings – SE 2, 3, 5 and 6 series **139**
Designations 141
Standard housing design 143
Product data 148
Ordering information 149
Product tables
2.1 SNL and SE plummer block housings for bearings on an adapter sleeve, metric shafts 86
2.2 SNL and SE plummer block housings for bearings on an adapter sleeve, inch shafts 100
2.3 SNL and SE plummer block housings for bearings on a cylindrical seat 120

4 Split plummer block housings – SNLN 30 series **151**
Designations 153
Standard housing design 155
Housing variants 158
Sealing solutions 160
Using sealed bearings 164
Special seals 166
Design considerations 168
Lubrication 173
Mounting 177
Condition monitoring 178
Accessories 178
Ordering information 179
Product tables
4.1 SNLN 30 plummer block housings for bearings on an adapter sleeve 180
4.2 SNLN 30 plummer block housings for bearings on a cylindrical seat 184

5 Split plummer block housings – SNL 30, 31 and 32 series **189**
Designations 191
Standard housing design 193
Housing variants 196
Sealing solutions 196
Using sealed bearings 200
Special seals 200
Design considerations 203
Lubrication 212
Mounting 219
Condition monitoring 220
Accessories 221
Ordering information 221
Product tables
5.1 Large SNL plummer block housings for bearings on an adapter sleeve, metric shafts 222
5.2 Large SNL plummer block housings for bearings on an adapter sleeve, inch shafts 260
5.3 Large SNL plummer block housings for bearings on a cylindrical seat 301

6 Split plummer block housings – SED 30, 31, 32 and 39 series **331**
Designations 333
Standard housing design 334
Housing variants 336
Sealing solutions 337
Design considerations 338
Lubrication 342
Mounting 342
Condition monitoring 343
Accessories 343
Ordering information 343
Product tables
6.1 SED plummer block housings for bearings on an adapter sleeve 344

7 Split plummer block housings – SONL series **349**
Designations 351
Standard housing design 353
Housing variants 356
Sealing solutions 356
Design considerations 360
Lubrication 364
Mounting 368
Condition monitoring 368
Accessories 369
Ordering information 369
Product tables
7.1 SONL plummer block housings for bearings on an adapter sleeve, metric shafts 370
7.2 SONL plummer block housings for bearings on an adapter sleeve, inch shafts 374
7.3 SONL plummer block housings for bearings on a cylindrical seat and a stepped shaft 378

8 Split pillow blocks – SAF and SAW series (inch dimensions) 383
Designations 385
Standard housing design 386
Housing variants 388
Sealing solutions 389
Using sealed bearings 401
Special seals 104
Design considerations 402
Lubrication 408
Mounting 414
Condition monitoring 415
Accessories 415
Ordering information 416
Product tables
8.1 SAF pillow blocks with self-aligning ball bearings on an adapter sleeve (Series 15(00), 16(00)) 418
8.2 SAF and SAW pillow blocks with spherical roller bearings on an adapter sleeve (Series 225(00), 226(00), 230(00)KA, 235(00)) 424
8.3 SAF pillow blocks with CARB bearings on adapter sleeve (Series C25(00), C26(00), C30(00)KA) 430
8.4 SAF pillow blocks with self-aligning ball bearings with a cylindrical bore (Series13(00), 12(00)) 434
8.5 SAF and SAW pillow blocks with spherical roller bearings with a cylindrical bore (Series 222(00), 223(00), 232(00)) 436
8.6 SAF pillow blocks with CARB bearings with a cylindrical bore (Series C22(00), C23(00)) 444

9 Split pillow blocks – SDAF series including the extended range (inch dimensions) ... 449
Designations 451
Standard housing design 452
Housing variants and customization 453
Sealing solutions 454
Special seals 462
Design considerations 462
Lubrication 467
Mounting 470
Condition monitoring 470
Ordering information 470
Product tables
9.1 SDAF pillow block housings with spherical roller bearings on an adapter sleeve (Series 225(00), 226(00)) 472
9.2 SDAF pillow block housings with spherical roller bearings with a cylindrical bore (Series 222(00), 223(00)) 474
9.3 SDAF extended range pillow block housings with spherical roller bearings on an adapter sleeve (Series 230(00) KA, 231(00) KA, 232(00) KA) 476
9.4 SDAF extended range pillow block housings with spherical roller bearings with a cylindrical bore (Series 230(00), 231(00), 232(00)) 480

10 Non-split plummer block housings and take-up housings – SBD and THD series .. 485
Designations 487
Standard housing design 488
Housing variants 490
Sealing solutions 490
Design considerations 493
Lubrication 498
Mounting 501
Condition monitoring 501
Accessories 501
Ordering information 501
Product tables
10.1 SBD plummer block housings for bearings on an adapter sleeve and a plain shaft 502
10.2 SBD plummer block housings for bearings on an adapter sleeve and a stepped shaft 508
10.3 SBD plummer block housings for bearings on a cylindrical seat and a stepped shaft 514
10.4 SBD plummer block housings for bearings on a cylindrical seat and a multi-stepped shaft 520
10.5 THD take-up housings for bearings on an adapter sleeve and a plain shaft 526

11 Flanged housings – FNL series 531
Designations 533
Standard housing design 535
Housing variants 537
Sealing solutions 538
Design considerations 539
Lubrication 542
Mounting 544
Condition monitoring 544
Accessories 544
Ordering information 545
Product tables
11.1 FNL flanged housings for bearings on an adapter sleeve 546

12 Two-bearing housings – PD series ... **553**
Designations ... 555
Standard housing design ... 557
Housing variants ... 558
Sealing solutions ... 558
Design considerations ... 560
Lubrication ... 567
Mounting ... 568
Condition monitoring ... 569
Accessories ... 569
Ordering information ... 570
Product tables
12.1 Two-bearing housings in the PDN series ... 572
12.2 Two-bearing housings in the PDP series ... 576
12.3 Two-bearing housings in the PDR series ... 578
12.4 Shafts for two-bearing housings in the PDN 2 series ... 580
12.5 Shafts for two-bearing housings in the PDN 3 series ... 582
12.6 Shafts for two-bearing housings in the PDP series ... 584
12.7 Shafts for two-bearing housings in the PDR series ... 586

13 Housings for paper machines – SBFN, SBPN and SDM series ... **589**
Designations ... 591
Standard housing design ... 592
Housing variants ... 594
Sealing solutions ... 596
Design considerations ... 598
Lubrication ... 602
Mounting ... 603
Condition monitoring ... 604
Accessories ... 605
Ordering information ... 605
Product tables
13.1 SBPN drying cylinder housings ... 606
13.2 SBPN drying cylinder housings – short, wide base ... 608
13.3 SBPN drying cylinder housings, with inch connection threads ... 610
13.4 SBPN drying cylinder housings, with inch connection threads – short, wide base ... 612
13.5 SDM Yankee cylinder housings ... 614
13.6 SDM Yankee cylinder housings with inch connection threads ... 618

14 Split plummer block housings for converters in steel making – SKND series ... **623**
Designations ... 625
Housing design ... 626
Housing variants ... 629
Sealing solutions ... 629
Design considerations ... 630
Lubrication ... 631
Mounting ... 632
Accessories ... 632
Ordering information ... 633
Product tables
14.1 SKND plummer block housings for converters ... 634

15 Trunnion bearing housings for grinding mills – FSDR .. K series **639**
Designations 641
Standard housing design 642
Housing variants 644
Sealing solutions 645
Design considerations 648
Lubrication 650
Mounting 652
Condition monitoring 653
Accessories 653
Ordering information 654
Product tables
15.1 FSDR .. K grinding mill housings 656

16 Metric roller bearing units – SYNT and FYNT series (SKF ConCentra) **659**
Designations 661
Standard bearing unit design 662
Bearing unit variants 666
Sealing solutions 667
Design considerations 670
Lubrication 675
Mounting 682
Condition monitoring 684
Accessories 684
Ordering information 685
Product tables
16.1 SKF ConCentra roller bearing units with a plummer block housing, metric shafts 686
16.2 SKF ConCentra roller bearing units with a flanged housing, metric shafts 688

17 Inch roller bearing units – SYE, SYR, FYE and FYR series **691**
Designations 693
Standard bearing unit design 694
Sealing solutions 697
Design considerations 700
Lubrication 706
Mounting 707
Condition monitoring 707
Accessories 707
Ordering information 707
Product tables
17.1 SKF inch roller bearing units with a two-bolt pillow (plummer) block housing ... 708
17.2 SKF inch roller bearing units with a four-bolt pillow (plummer) block housing ... 714
17.3 SKF inch roller bearing units with a with a square flanged housing 716
17.4 SKF inch roller bearing units with a round or piloted flanged housing 718

18 Indexes
18.1 Text index 723
18.2 Product index 738
18.3 Bearing index 742

Unit conversions

Unit conversions

Quantity	Unit	Conversion			
Length	inch	1 mm	0.03937 in.	1 in.	25,40 mm
	foot	1 m	3.281 ft.	1 ft.	0,3048 m
	yard	1 m	1.094 yd.	1 yd.	0,9144 m
	mile	1 km	0.6214 mi.	1 mi.	1,609 km
Area	square inch	1 mm^2	0.00155 sq-in	1 sq-in	645,16 mm^2
	square foot	1 m^2	10.76 sq-ft	1 sq-ft	0,0929 m^2
Volume	cubic inch	1 cm^3	0.061 cu-in	1 cu-in	16,387 cm^3
	cubic foot	1 m^3	35 cu-ft	1 cu-ft	0,02832 m^3
	imperial gallon	1 l	0.22 gallon	1 gallon	4,5461 l
	US gallon	1 l	0.2642 US gallon	1 US gallon	3,7854 l
Speed, velocity	foot per second	1 m/s	3.28 ft/s	1 ft/s	0,30480 m/s
	mile per hour	1 km/h	0.6214 mph	1 mph	1,609 km/h
Mass	ounce	1 g	0.03527 oz.	1 oz.	28,350 g
	pound	1 kg	2.205 lb.	1 lb.	0,45359 kg
	short ton	1 tonne	1.1023 short ton	1 short ton	0,90719 tonne
	long ton	1 tonne	0.9842 long ton	1 long ton	1,0161 tonne
Density	pound per cubic inch	1 g/cm^3	0.0361 lb/cu-in	1 lb/cu-in	27,680 g/cm^3
Force	pound-force	1 N	0.225 lbf.	1 lbf.	4,4482 N
Pressure, stress	pounds per square inch	1 MPa	145 psi	1 psi	6,8948 × 10^3 Pa
		1 N/mm^2	145 psi		
		1 bar	14.5 psi	1 psi	0,068948 bar
Moment	pound-force inch	1 Nm	8.85 lbf-in	1 lbf-in	0,113 Nm
Power	foot-pound per second	1 W	0.7376 ft-lbf/s	1 ft-lbf/s	1,3558 W
	horsepower	1 kW	1.36 hp	1 hp	0,736 kW
Temperature	degree	Celsius	$t_C = 0.555\ (t_F - 32)$	Fahrenheit	$t_F = 1,8\ t_C + 32$

Foreword

This catalogue contains the standard assortment of SKF housings and roller bearing units typically used in industrial applications. To provide the highest levels of quality and customer service, these products are available worldwide through SKF sales channels. For information about lead times and deliveries, contact your local SKF representative or SKF Authorized Distributor.

The data in this catalogue reflects SKF's state-of-the-art technology and production capabilities as of 2015. The data contained within may differ from that shown in earlier catalogues because of redesign, technological developments, or revised calculation methods. SKF reserves the right to continually improve its products with respect to materials, design and manufacturing methods, some of which are driven by technological developments.

Getting started

This catalogue contains detailed information about all standard SKF metric and inch bearing housings, some application specific housings and SKF roller bearing units. Roller bearing units consist of a housing, a spherical roller bearing, seals and lubricant. These ready-to-mount units can provide a number of advantages when compared to plummer (pillow) block or flanged housings. They are easy and safe to mount and do not require any additional parts.

The first section, which contains general technical information, is designed to help the reader select the best, most effective products for a particular application. In this section, shaft-bearing combinations, sealing solutions and lubrication methods are discussed in detail. Installation and maintenance information is also included. More practical information about mounting and maintenance is provided in the *SKF bearing maintenance handbook* (ISBN 978-91-978966-4-1).

The latest developments

The latest innovations within the area of SKF bearing housings include:

SE series housings – new housings in accordance with ISO 113

SE plummer block housings supersede SNL plummer block housings in the 2, 3, 5 and 6 series, and are available in corresponding sizes, from size 507 up to 515-612. From size 516-613, SNL plummer block housings in the 2, 3, 5 and 6 series remains.

SED series housings – largest housings in the standard range

Split housings for bearings with shaft diameters from 430 mm up to 900 mm were typically not standard. A new design concept makes it possible to supply these exceptionally large housings as standard (→ *Split plummer block housings – SED 30, 31, 32 and 39 series*, **page 331**).

Housings for sealed spherical roller bearings

Sealed spherical roller bearings have been proven to enhance reliability under arduous operating conditions. Consequently, the SKF bearing housing assortment includes housings for these bearings.

Roller bearing units with SKF ConCentra locking technology

Like bearing units with a locking collar, SKF ConCentra roller bearing units are simple and safe to install. The unique SKF ConCentra locking technology provides a truly concentric fit on the shaft, which virtually eliminates fretting corrosion. These units provide the same running accuracy as housing assemblies with sleeve-mounted bearings. (→ *Metric roller bearing units – SYNT and FYNT series*, **page 659** or *Inch roller bearing units – SYE, SYR, FYE and FYR series*, **page 691**).



SE series housing



SED series housing



Roller bearing unit with SKF ConCentra locking technology

How best to use this catalogue

The catalogue follows an easy principle:

- Chapter 1 provides basic information about bearing housings. It includes a product overview that compares different housing series, sizes, typical shaft-bearing combinations, sealing solutions and lubrication methods. (→ **pages 21** to **53**).
- Chapters 2 to 17 provide information specific to a bearing housing or bearing unit series. Basic design, variants, sealing options and design considerations are discussed in detail. Following that discussion are the product tables.
- Chapter 18 contains the indexes.

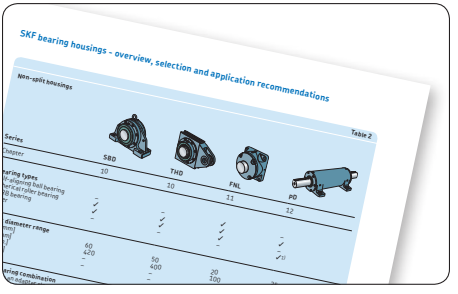

Product overview

Find a housing for a bearing quickly

The bearing index (→ **page 742**) is a quick way to find a housing for a particular bearing. All bearings, which can be accommodated by a housing in this catalogue, are listed per bearing type and sorted alphanumerically, but with cylindrical bore bearings listed before tapered bore bearings.

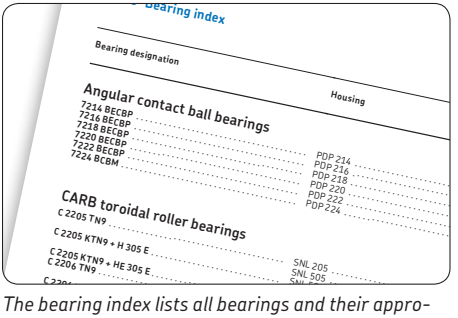

The bearing index lists all bearings and their appropriate housings

Find specific information quickly

To make it easy to find specific information, there is a full table of contents at the front of the catalogue. In chapter 18, there is a product index and a full text index.

Find product details quickly

A quick way to access detailed product data is via the product table number. Product table numbers are listed in the full table of contents at the front of the catalogue, in the table of contents at the start of each product chapter and in the product and bearing indexes.

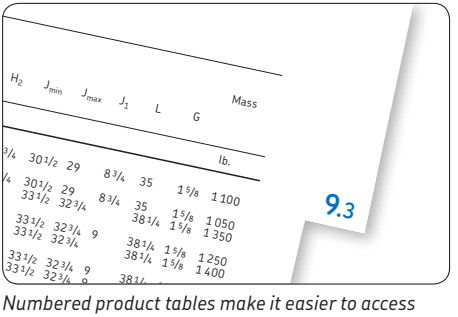

Numbered product tables make it easier to access product data.

Identify products

Product designations for SKF bearing housings typically contain information about the housing and additional features. To specify a housing or to find more information about an existing SKF housing, SKF product designations can be found in:

- Product index
  The product index at the end of the catalogue lists series designations and relates them to the relevant product chapter and product table.
- Designation charts
  Charts in each product chapter provide an overview of commonly used designation prefixes and suffixes.

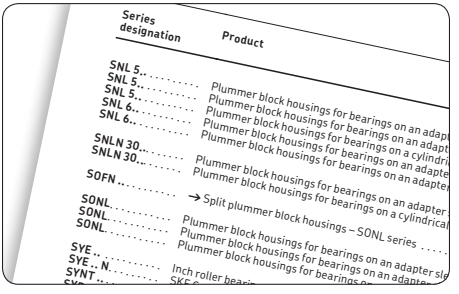

The product index makes finding information based on a bearing's designation easy.

Units of measurement

This catalogue is for global use. Therefore, the predominant units of measurement are in accordance with ISO 80000-1. Imperial units are used whenever necessary. Unit conversions can be made using the conversion table (→ **page 10**).

For easier use, temperature values are provided in both, °C and °F. Temperature values are typically rounded. Therefore, the two values do not always match according to the conversion formula.

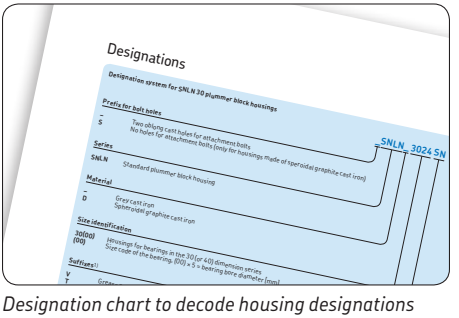

Designation chart to decode housing designations

More SKF housings and units

Application specific housings

The SKF design and manufacturing capabilities for bearing housings are not limited to the products described in this catalogue. SKF has supplied bearing and housing solutions for various applications including:

- main shaft support for wind turbines
- rudder or drive shaft support for ships
- rail bound vehicles
- moveable bridges
- housings for split bearings
- housings for converters in steel making

Customized housings

SKF can design custom housings using state-of-the-art finite element analysis. Prior to prototyping, SKF engineers can add their bearing, and seal expertise and confirm the integrity of the system on a virtual test rig. SKF housing manufacturing facilities are able to produce bearing housings for nearly all SKF rolling bearings.

Y-bearing units

Y-bearing units consist of a housing, a deep groove ball bearing, seals or shields and grease. These ready to mount units are available in a variety of shapes and sizes. For additional information about these products, visit skf.com/bearings.

Previous housing series

Some housing series are no longer available and are not listed in this catalogue. If replacement parts are required, especially for housings in the SOFN or SDG series, contact SKF.

This is SKF

From one simple but inspired solution to a misalignment problem in a textile mill in Sweden, and fifteen employees in 1907, SKF has grown to become a global industrial knowledge leader. Over the years, we have built on our expertise in bearings, extending it to seals, mechatronics, services and lubrication systems. Our knowledge network includes 46 000 employees, 15 000 distributor partners, offices in more than 130 countries, and a growing number of SKF Solution Factory sites around the world.



Research and development

We have hands-on experience in over forty industries based on our employees' knowledge of real life conditions. In addition, our world-leading experts and university partners pioneer advanced theoretical research and development in areas including tribology, condition monitoring, asset management and bearing life theory. Our ongoing commitment to research and development helps us keep our customers at the forefront of their industries.



SKF Solution Factory makes SKF knowledge and manufacturing expertise available locally to provide unique solutions and services to our customers.

Meeting the toughest challenges

Our network of knowledge and experience, along with our understanding of how our core technologies can be combined, helps us create innovative solutions that meet the toughest of challenges. We work closely with our customers throughout the asset life cycle, helping them to profitably and responsibly grow their businesses.



Working for a sustainable future

Since 2005, SKF has worked to reduce the negative environmental impact from our operations and those of our suppliers. Our continuing technology development resulted in the introduction of the SKF BeyondZero portfolio of products and services which improve efficiency and reduce energy losses, as well as enable new technologies harnessing wind, solar and ocean power. This combined approach helps reduce the environmental impact both in our operations and our customers' operations.



Working with SKF IT and logistics systems and application experts, SKF Authorized Distributors deliver a valuable mix of product and application knowledge to customers worldwide.

SKF – the knowledge engineering company

Our knowledge – your success

SKF Life Cycle Management is how we combine our technology platforms and advanced services, and apply them at each stage of the asset life cycle, to help our customers to be more successful, sustainable and profitable.

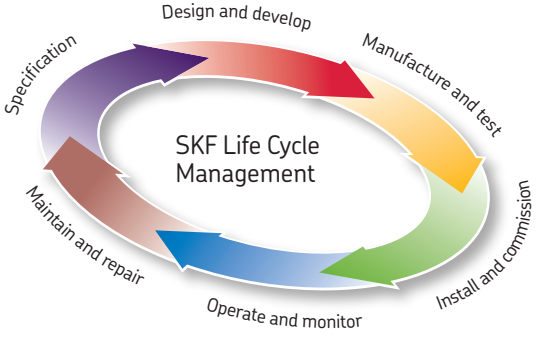

Working closely with you

Our objective is to help our customers improve productivity, minimize maintenance, achieve higher energy and resource efficiency, and optimize designs for long service life and reliability.

Innovative solutions

Whether the application is linear or rotary or a combination, SKF engineers can work with you at each stage of the asset life cycle to improve machine performance by looking at the entire application. This approach doesn't just focus on individual components like bearings or seals. It looks at the whole application to see how each component interacts with each other.

Design optimization and verification

SKF can work with you to optimize current or new designs with proprietary 3-D modelling software that can also be used as a virtual test rig to confirm the integrity of the design.



Bearings
SKF is the world leader in the design, development and manufacture of high performance rolling bearings, plain bearings, bearing units and housings.



Machinery maintenance
Condition monitoring technologies and maintenance services from SKF can help minimize unplanned downtime, improve operational efficiency and reduce maintenance costs.



Sealing solutions
SKF offers standard seals and custom engineered sealing solutions to increase uptime, improve machine reliability, reduce friction and power losses, and extend lubricant life.



Mechatronics
SKF fly-by-wire systems for aircraft and drive-by-wire systems for off-road, agricultural and forklift applications replace heavy, grease or oil consuming mechanical and hydraulic systems.



Lubrication solutions
From specialized lubricants to state-of-the-art lubrication systems and lubrication management services, lubrication solutions from SKF can help to reduce lubrication related downtime and lubricant consumption.



Actuation and motion control
With a wide assortment of products – from actuators and ball screws to profile rail guides – SKF can work with you to solve your most pressing linear system challenges.



SKF bearing housings – overview, selection and application recommendations

Basics 22

Terminology 22

Overview of SKF bearing housings 27
Assortment 27
Housing materials 29

Selecting a housing 35

Environmental conditions 36
Custom painting / corrosivity category . . . 36

Sealing solutions 36
The SKF three-barrier solution 39

Design considerations 40
Bearing arrangements 40
Locating/non-locating bearing arrangements 40
The SKF self-aligning bearing system . . 41
Typical shaft-bearing combinations . . . 41
Load carrying capacity 44
Breaking loads 44
Safe loads 44
Axial load carrying capacity for bearings on a sleeve 44
Specifications for shafts and housing support surfaces 45
Shaft 45
Housing support surface 45

Lubrication 46
Grease selection 46
Initial grease fill 46
Relubrication 46
SKF tools and products 47

Mounting 50
Preparations prior to mounting 50
SKF tools and products 50
Lifting housings 50
Attachment bolt tightening 50
Using shims 50
Using locating (stabilizing) rings 50
Installing seals 51

Inspection and condition monitoring . . . 52

Storage 52

Basics

The purpose of a bearing housing is to:

- support the bearing and transmit operating static and dynamic loads
- protect the bearing and lubricant from contaminants
- contain the lubricant and accommodate lubrication system components
- accommodate monitoring system components
- maximize the performance and service life of the incorporated bearings

Terminology

An overview of the terminology used in this catalogue is provided in **figs. 1** to **4**:

- types of bearing housings and bearing units (→ **fig. 1**)
- split plummer (pillow) block housings (→ **fig. 2**)
- housing and shaft arrangements (→ **figs. 3 and 4**)

Fig. 1

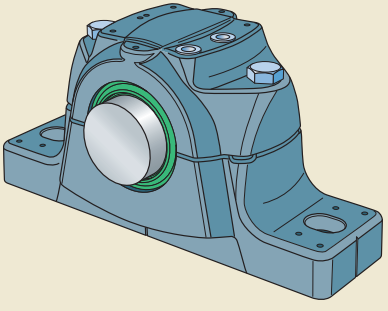

Split plummer (pillow) block housing

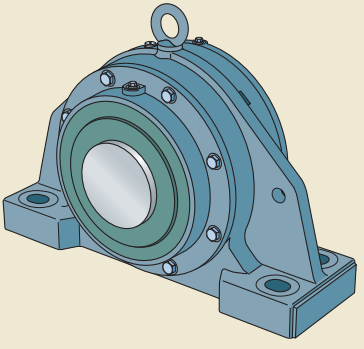

Non-split plummer (pillow) block housing

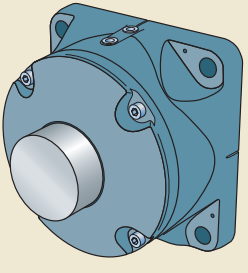

Flanged housing

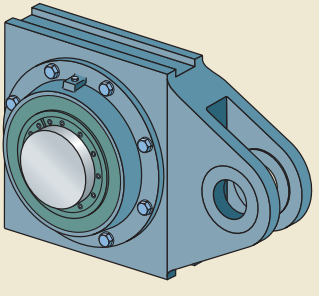

Take-up housing

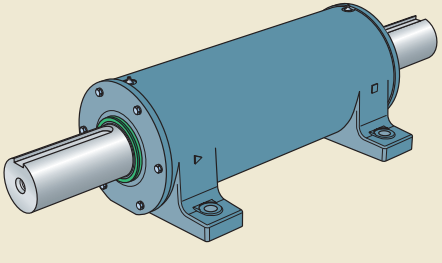

Two-bearing housing

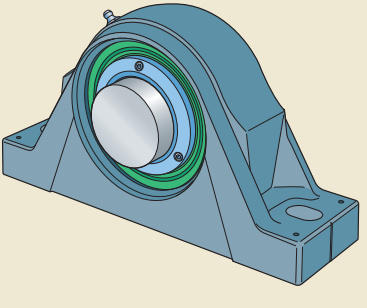

Roller bearing unit

Fig. 2

SE plummer (pillow) block housing

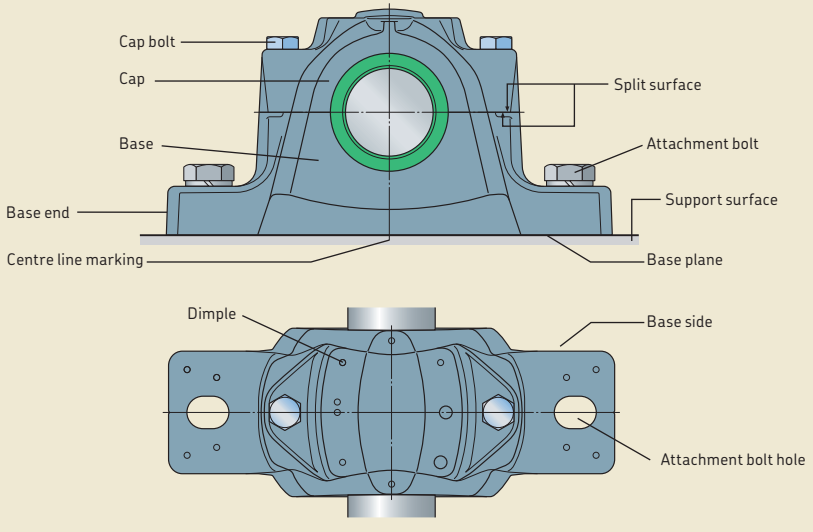

SONL plummer (pillow) block housing

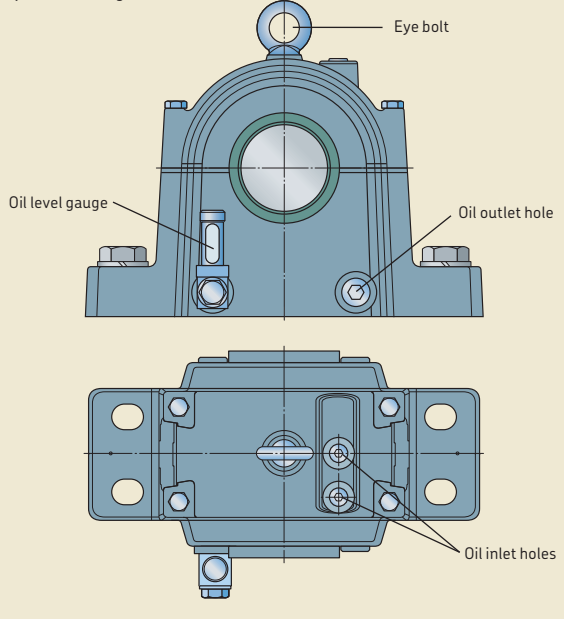

Fig. 3

SE plummer (pillow) block housing

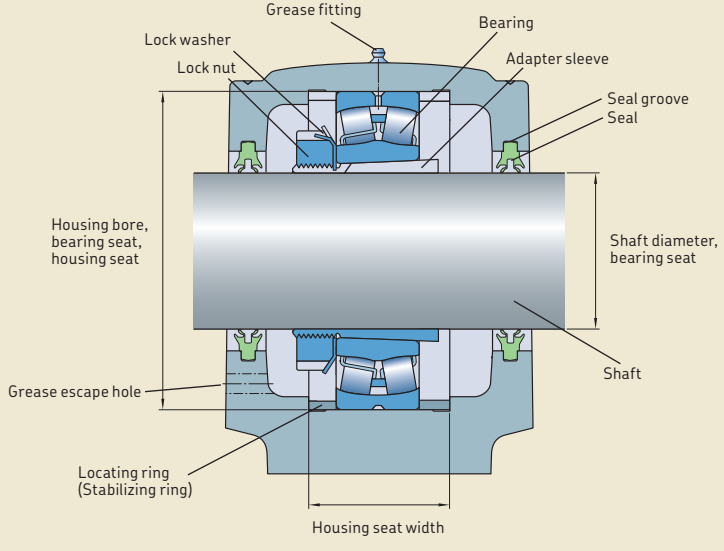

FNL flanged housing

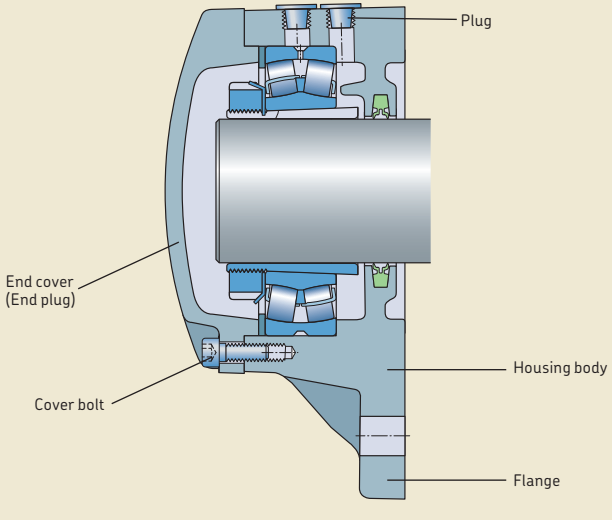

Fig. 4

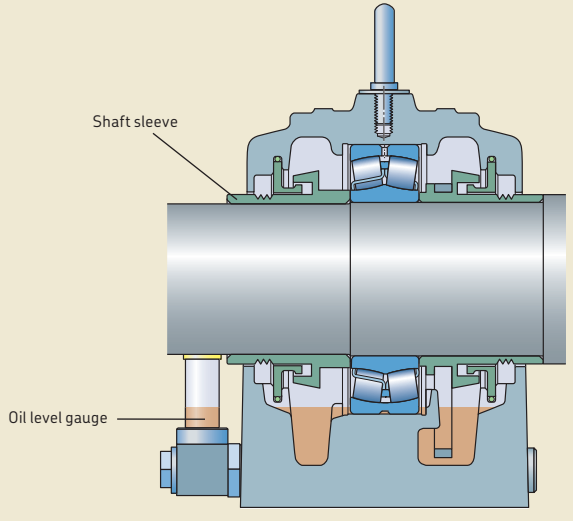
Shaft sleeve
Oil level gauge

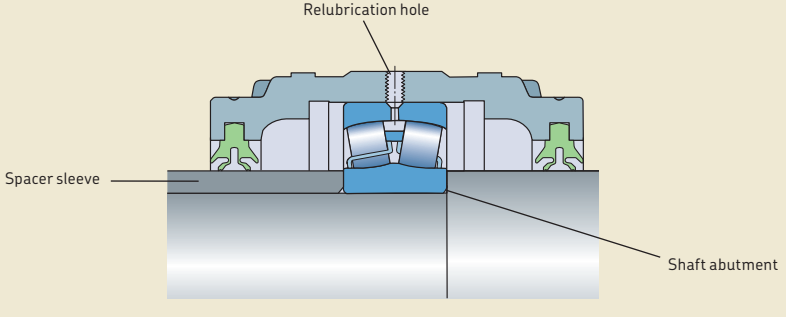
Relubrication hole
Spacer sleeve
Shaft abutment

Overview of SKF bearing housings

Assortment

The comprehensive assortment of SKF bearing housings is provided in **tables 1** to **4**, starting on **page 30**. SKF can also supply custom housings for specific applications and requirements. For additional information, contact the SKF application engineering service.

Split plummer (pillow) block housings

The main benefit of split plummer (pillow) block housings (→ **fig. 5**) is that they can accommodate preassembled shafts. Also, these housings simplify bearing inspections and maintenance because the shaft does not need to be disassembled.

The assortment of split plummer block housings is provided in **table 1** on **page 30**. Application-specific housings are provided in **table 4** on **page 34**.

Non-split plummer (pillow) block housings

Non-split plummer (pillow) block housings (→ **fig. 6**) are preferred when there are heavy loads acting in directions other than toward the support surface. They are also used when the housing has to be mounted from the end of the shaft.

The assortment of non-split plummer block housings is provided in **table 2** on **page 32**. Application-specific housings are provided in **table 4** on **page 34**.

Flanged housings

Flanged housings (→ **fig. 7**) provide a solution for applications that do not have a frame parallel to the shaft. The assortment of flanged housings is provided in **table 2** on **page 32**.

Fig. 5

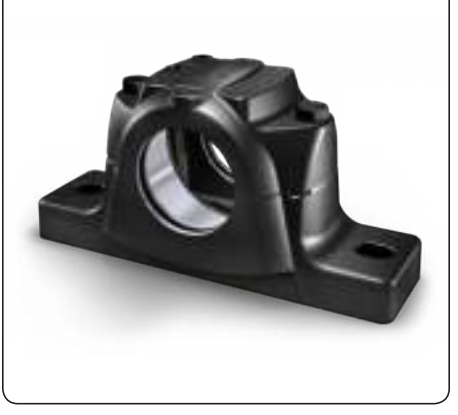

Fig. 6

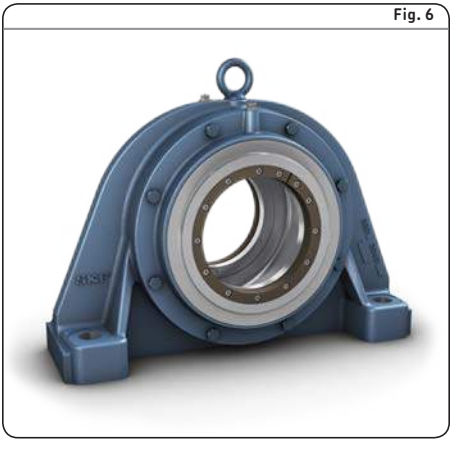

Fig. 7



Take-up housings

Take-up housings (→ **fig. 8**) are typically used to maintain the tension in conveyor belt applications and are mounted onto a guide frame.

The assortment of take-up housings is provided in **table 2** on **page 32**.

Two-bearing housings

Two-bearing housings (→ **fig. 9**) have intrinsically aligned bearing seats. As a result, they can accommodate rigid bearings, such as deep groove ball bearings, angular contact ball bearings and cylindrical roller bearings. Two-bearing housings are typically used in applications with an overhanging load.

The assortment of two-bearing housings is provided in **table 2** on **page 32**.

Roller bearing units

Roller bearing units consist of a bearing, housing, lubricant and seals as well as a mechanism to lock the bearing inner ring onto the shaft (→ **fig. 10**). These ready-to-mount units are assembled, lubricated and sealed at the factory for maximum service life. Bearing units require very little maintenance. They are also easy to install and replace. Once a unit is bolted to its support surface, only the grub (set) screws in the collar need to be tightened.

The assortment of roller bearing units is provided in **table 3** on **page 33**.

Application-specific housings

Application-specific housings have features that enable them to be used in special operating conditions. The assortment of application-specific housings is provided in **table 4** on **page 34**.

Fig. 8

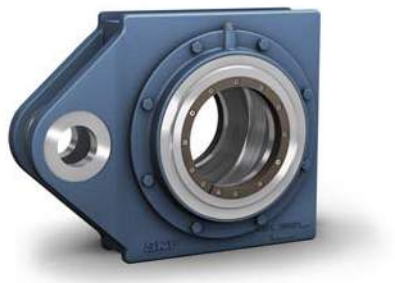

Fig. 9

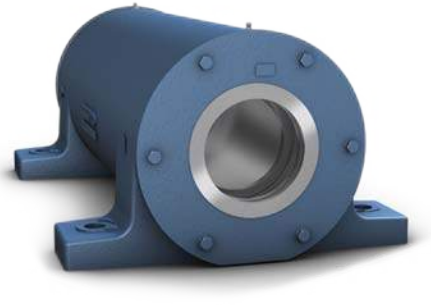

Fig. 10



Housing materials

SKF housings are typically made of either grey cast iron or spheroidal graphite cast iron. For information about the material options available for a particular housing type, refer to **tables 1** to **4**, starting on **page 30**, or the relevant product chapter.

Grey cast iron

Grey cast iron is the standard material for most SKF housings and is sufficient for the majority of applications. It is characterized by high strength, good damping capability and good thermal conductivity.

Spheroidal graphite cast iron

Spheroidal graphite cast iron contains graphite nodules, making it ductile. It therefore provides a higher degree of strength and toughness than grey cast iron. On average, housings made of spheroidal graphite cast iron can withstand 1,8 times heavier loads compared to housings made of grey cast iron.

Split plummer (pillow) block housings

Series	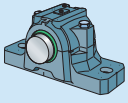 SNL 2, 3, 5 and 6	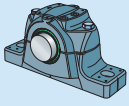 SE 2, 3, 5 and 6	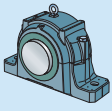 SNLN 30
Chapter	2	3	4
Bearing types			
Self-aligning ball bearing	✓	✓	–
Spherical roller bearing	✓	✓	✓
CARB bearing	✓	✓	✓
Shaft diameter range			
from [mm]	20 and 60	30	110
to [mm]	30 160	75	280
from [*in.*]	*3/4* and *2 3/16*	*15/16*	–
to [*in.*]	*1* *5 1/2*	*2 1/2*	–
Shaft-bearing combination			
Bearing on an adapter sleeve	✓	✓	✓
Bearing on a withdrawal sleeve	✓	✓	✓
Bearing on a cylindrical seat	✓	✓	✓
Sealing solutions			
Lip seal	✓	✓	✓[1]
Radial shaft seal	–	–	–
V-ring seal	✓	✓	✓[1]
Felt seal	✓	✓	✓[1]
Labyrinth seal	✓	✓	✓
Taconite heavy-duty seal	✓	✓	✓
Multi-seal	–	–	–
Lubrication			
Grease	✓	✓	✓
Oil	optional	optional[2]	–
Materials			
Grey cast iron	standard	standard	standard
Spheroidal graphite cast iron	optional	optional	optional
Cast steel	–	–	–
Mounting			
No attachment bolts	✓	✓	✓
Two-bolt mounting	✓	✓	✓
Four-bolt mounting	✓	✓	✓
Eight-bolt mounting	–	–	–
Supersedes (SKF)	SNH, SNA, SN	SNL 2,3,5 and 6, SNH, SNA, SN	SN 30
Replacement for (non-SKF)	ISO 113 standard housing	ISO 113 standard housing	ISO 113 standard housing

[1] Not available for sizes 34 and above.
[2] For sizes 518 to 532 circulating oil only.

Table 1

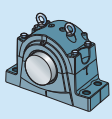	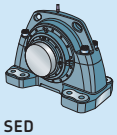	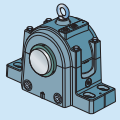	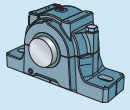	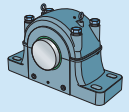
SNL 30, 31 and 32	**SED**	**SONL**	**SAF, SAW**	**SDAF**
5	6	7	8	9
–	–	✓	✓	–
✓	✓	✓	✓	✓
✓	✓	✓	✓	✓
115	430	75	40	85
530	900	240	220	530
4 7/16	–	*2 15/16*	*1 3/16*	2 15/16
19 1/2	–	*8 15/16*	*10 1/2*	20
✓	✓	✓	✓	✓
✓	–	–	–	–
✓	✓	✓	✓	✓
–	–	–	–	–
–	–	–	✓	✓
–	–	–	–	–
–	–	–	–	✓
✓	–	✓	✓	✓
✓	–	–	✓	✓
–	✓	–	–	–
✓	✓	–	✓	✓
✓	✓	✓	✓	✓
standard	–	standard	standard	standard
optional	standard	optional	optional	optional
–	–	–	optional	optional
–	–	–	–	–
–	–	–	✓	–
✓	–	✓	✓	✓
–	✓	–	–	–
SD, SDD	–	SOFN 2, 5	–	–
ISO 113	–	–	–	–
standard housing				

Table 2

Non-split housings

Series	SBD	THD	FNL	PD
	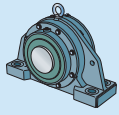	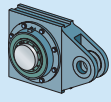		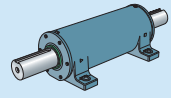
Chapter	10	10	11	12
Bearing types				
Self-aligning ball bearing	–	–	✓	–
Spherical roller bearing	✓	✓	✓	✓
CARB bearing	✓	✓	✓	–
Other	–	–	–	✓[1]
Shaft diameter range				
from [mm]	60	50	20	25
to [mm]	420	400	100	120
from [*in.*]	–	–	–	–
to [*in.*]	–	–	–	–
Shaft-bearing combination				
Bearing on an adapter sleeve	✓	✓	✓	–
Bearing on a withdrawal sleeve	–	–	–	–
Bearing on a cylindrical seat	✓	✓	–	✓
Sealing solutions				
Lip seal	–	–	✓	–
V-ring seal	–	–	–	✓
Felt seal	–	–	–	✓
Labyrinth seal	✓	✓	–	–
Lubrication				
Grease	✓	✓	✓	✓
Oil	–	–	–	optional
Materials				
Grey cast iron	optional	optional	standard	standard
Spheroidal graphite cast iron	standard	standard	–	–
Cast steel	optional	optional	–	–
Mounting				
No attachment bolts	–	n/a	–	–
Two-bolt mounting	–	n/a	–	–
Four-bolt mounting	✓	n/a	✓[2]	✓
Supersedes (SKF)	–	–	7225(00)	–

[1] Typical bearings include deep groove ball bearings, angular contact ball bearings, and cylindrical roller bearings.
[2] Housings with a triangular flange have three attachment bolts.

Table 3

Roller bearing units

	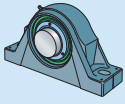	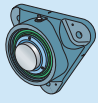	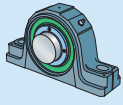	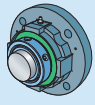
Series	**SYNT**	**FYNT**	**SYE .. N, SYR .. N, FSYE**	**FYE, FYR, FYRP**
Chapter	16	16	17	17
Bearing types				
Self-aligning ball bearing	–	–	–	–
Spherical roller bearing	✓	✓	✓	✓
CARB bearing	–	–	–	–
Shaft diameter range				
from [mm]	35	35	–	–
to [mm]	100	100	–	–
from [*in.*]	–	–	*1 7/16*	*1 7/16*
to [*in.*]	–	–	*4 15/16*	*4*
Locking method				
SKF ConCentra	✓	✓	✓	✓
Locking collar	–	–	✓	✓
Sealing solutions				
Lip seal	✓	✓	✓	✓
Radial shaft seal	✓	–	✓	✓
Labyrinth seal	✓	–	✓	✓
Lubrication				
Grease	✓	✓	✓	✓
Oil	–	–	–	–
Materials				
Grey cast iron	✓	✓	✓	✓
Mounting				
No attachment bolts	–	–	–	–
Two-bolt mounting	✓	–	✓	–
Four-bolt mounting	–	✓[1)]	✓	✓
Supersedes (SKF)	SYT	–	–	–

[1)] Housings with a triangular flange have three attachment bolts.

Table 4

Application-specific housings

Series	SBPN	SBFN	SDM	SKND	FSDR
	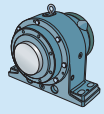	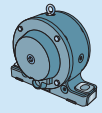	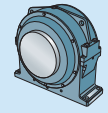	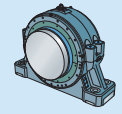	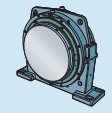
Chapter	13	13	13	14	15
Application	Drying cylinder	Felt roll	Yankee cylinder	Converter trunnion	Mill trunnion
Bearing types					
Self-aligning ball bearing	–	–	–	–	–
Spherical roller bearing	✓	✓	✓	✓	✓
CARB bearing	✓	✓	✓	✓	–
Shaft diameter range					
from [mm]	180	60	340	530	825
to [mm]	320	180	670	1 180	1 460
from [*in.*]	1)	1)	1)	1)	1)
to [*in.*]	1)	1)	1)	1)	1)
Shaft-bearing combination					
Bearing on an unthreaded sleeve	–	–	–	–	✓2)
Bearing on a cylindrical seat	–	optional	–	✓	–
Bearing on a tapered seat	✓	✓	✓	–	–
Sealing solutions					
Lip seal	–	–	–	✓	–
V-ring seal	–	–	–	–	✓
Labyrinth seal	✓	✓	–	–	✓
Gap-type seal	–	–	✓	–	–
Lubrication					
Grease	–	–	–	✓	✓
Oil	✓	✓	✓	–	–
Materials					
Grey cast iron	✓	✓	✓	–	✓
Spheroidal graphite cast iron	–	–	–	✓	optional
Mounting					
No attachment bolts	–	–	–	–	–
Two-bolt mounting	–	✓	–	–	–
Four-bolt mounting	✓	optional	✓	✓	✓
Supersedes (SKF)	SBP	SBF2)	–	SDKD	–

1) Contact SKF.
2) Housings are still available.

Selecting a housing

When selecting a housing, many factors should be considered. The selection process depends not only on the bearing type and size but also on the ability of the housing to safely accommodate the magnitude and characteristics of all applied loads. Beside this, important considerations are mounting, maintenance, sealing options and bearing lubricant requirements.

Search for a housing

To identify housings that are suitable for a specific bearing type, size and shaft-bearing combination, use the *Bearing index*, starting on **page 742**, or the online application *SKF Housing Select*, available at skf.com/housings. Also keep in mind that a roller bearing unit may be the preferred solution (→ **table 5**). An online search facility for bearing units is also available at skf.com/housings.

Adjust the bearing selection

If there is no suitable housing for the selected bearing type or size, consider switching to a bearing that can be accommodated in a standard housing. The result will be a more cost-effective bearing/housing solution.

Select the final housing variant

Once a housing has been selected, be sure that the housing and available sealing solutions will accommodate the loads, shaft-bearing combination, lubrication method and operating conditions, e.g. type and level of contaminants. Consider all housing variants, including those with a non-standard seat tolerance or special seals. For unique requirements, contact the SKF application engineering service.

Table 5

Housing equivalents

Housing series	Roller bearing unit
SNL 5 series	SKF ConCentra roller bearing units in the SYNT series
FNL series	SKF ConCentra roller bearing units in the FYNT series

Environmental conditions

SKF housings are intended for both interior and exterior applications. The following corrosivity categories, in accordance with ISO 12944-2, are applicable for SKF housings:

- C2 for all housings except SE and SED plummer (pillow) block housings
- C3 for SE and SED plummer (pillow) block housings

Additional information about corrosivity categories is provided in **table 6**.

Custom painting / corrosivity category

The standard colour and corrosivity category of an SKF housing is indicated in the relevant product chapter. SKF housings can also be supplied in other colours and/or corrosivity categories (→ **table 6**) or according to customer specifications. Housings that have a non-standard painting requirement are identified by the designation suffix P followed by a unique two- or three-digit number e.g. SNL 510-608/P76.

If a housing is going to be repainted, SKF recommends taking the following precautions prior to painting:

- Cover all housing openings. For housings with seal grooves, place discs cut from cardboard or plastic in the seal grooves. This is particularly important because residual chemicals or abrasives from the preparation process can lead to premature bearing and seal damage.
- Remove all grease fittings and protect all threaded holes with plugs.
- To avoid any chemical attack of the surface when washing painted castings, follow the instructions from the supplier of the washing chemicals regarding concentration, temperature, and time. The paint is resistant to commonly used low alkalescent washing chemicals.

Sealing solutions

The performance of a sealing arrangement is vital to the cleanliness of the lubricant and the service life of the bearings. The type of seal should be selected based on the lubricant type and operating speed but levels of contamination and misalignment should also be considered.

There is a wide assortment of SKF housing seals. Some housings can accommodate different types of seals, while other housings are designed for one specific sealing solution. For information about the sealing solutions available for a particular housing or roller bearing unit, refer to **tables 1** to **4**, starting on **page 30**, or the relevant product chapter. The properties, application conditions and suitability of each sealing solution are also provided in the relevant product chapter.

Converting circumferential to rotational speeds

To convert the circumferential speed limit of a sealing solution to the equivalent rotational speed, refer to **table 7**.

Table 6

Corrosivity categories[1)]

Corrosivity category	Examples of typical environments in a temperate climate	
	Exterior	Interior
C1 (very low)	–	Heated buildings with clean atmospheres, e.g. offices, shops, schools, hotels.
C2 (low)	Atmospheres with low levels of pollution. Typically inland rural areas.	Unheated buildings where condensation may occur, e.g. depots, sport halls.
C3 (medium)	Urban and industrial atmospheres with moderate levels of sulphur dioxide. Coastal areas with low salinity.	Production rooms with high humidity and some air pollution, e.g. food-processing plants, laundries, breweries, dairies.
C4 (high)	Industrial and coastal areas with moderate salinity.	Chemical plants, swimming pools, coastal ship- and boatyards.
C5-I (very high, industrial)	Industrial areas with high humidity and aggressive atmosphere.	Buildings or areas with almost permanent condensation and with high pollution.
C5-M (very high, marine)	Coastal and offshore areas with high salinity.[2)]	Buildings or areas with almost permanent condensation and with high pollution.

[1)] In accordance with ISO 12944-2.
[2)] In hot, humid coastal areas, the mass loss or thickness loss can exceed the limits of category C5-M and special precautions should be taken when selecting protective paint systems.

Table 7

Converting circumferential speed limits to rotational speeds

Shaft diameter at the seal lip	Rotational speed for circumferential speed limits					
	2 m/s	4 m/s	7 m/s	8 m/s	12 m/s	13 m/s
mm	r/min					
20	1 910	3 820	6 680	7 640	11 460	12 410
25	1 530	3 060	5 350	6 110	9 170	9 930
30	1 270	2 550	4 460	5 090	7 640	8 280
35	1 090	2 180	3 820	4 370	6 550	7 090
40	950	1 910	3 340	3 820	5 730	6 210
45	850	1 700	2 970	3 400	5 090	5 520
50	760	1 530	2 670	3 060	4 580	4 970
55	690	1 390	2 430	2 780	4 170	4 510
60	640	1 270	2 230	2 550	3 820	4 140
65	590	1 180	2 060	2 350	3 530	3 820
70	550	1 090	1 910	2 180	3 270	3 550
75	510	1 020	1 780	2 040	3 060	3 310

continues on next page

cont. Table 7

Converting circumferential speed limits to rotational speeds

Shaft diameter at the seal lip	**Rotational speed** for circumferential speed limits					
	2 m/s	4 m/s	7 m/s	8 m/s	12 m/s	13 m/s
mm	r/min					
80	480	950	1 670	1 910	2 860	3 100
85	450	900	1 570	1 800	2 700	2 920
90	420	850	1 490	1 700	2 550	2 760
95	400	800	1 410	1 610	2 410	2 610
100	380	760	1 340	1 530	2 290	2 480
110	350	690	1 220	1 390	2 080	2 260
115	330	660	1 160	1 330	1 990	2 160
120	320	640	1 110	1 270	1 910	2 070
125	310	610	1 070	1 220	1 830	1 990
130	290	590	1 030	1 180	1 760	1 910
135	280	570	990	1 130	1 700	1 840
140	270	550	950	1 090	1 640	1 770
145	260	530	920	1 050	1 580	1 710
150	250	510	890	1 020	1 530	1 660
155	250	490	860	990	1 480	1 600
160	240	480	840	950	1 430	1 550
165	230	460	810	930	1 390	1 500
170	220	450	790	900	1 350	1 460
175	220	440	760	870	1 310	1 420
180	210	420	740	850	1 270	1 380
185	210	410	720	830	1 240	1 340
195	200	390	690	780	1 180	1 270
200	190	380	670	760	1 150	1 240
205	190	370	650	750	1 120	1 210
215	180	360	620	710	1 070	1 150
220	170	350	610	690	1 040	1 130
240	160	320	560	640	950	1 030
255	150	300	520	600	900	970
260	150	290	510	590	880	950
275	140	280	490	560	830	900
280	140	270	480	550	820	890
295	130	260	450	520	780	840
300	130	250	450	510	760	830
320	120	240	420	480	720	780
340	110	220	390	450	670	730
360	110	210	370	420	640	690
380	100	200	350	400	600	650
400	100	190	330	380	570	620
410	90	190	330	370	560	610
430	90	180	310	360	530	580
450	80	170	300	340	510	550
470	80	160	280	330	490	530
500	80	150	270	310	460	500

The SKF three-barrier solution

For highly contaminated environments, SKF recommends the three-barrier solution. This cost-effective sealing solution can have a significant impact on bearing service life as contaminants have to pass through three barriers to reach the bearing (→ **fig. 11**):

- 1st barrier – external housing seal
- 2nd barrier – housing grease
- 3rd barrier – integral bearing seal

The SKF three-barrier solution consists of a sealed SKF bearing, a housing with a 70 to 90% grease fill, and labyrinth housing seals.

Sealed bearings have integral contact seals that keep the lubricant in and contaminants out of the bearing cavity during operation. The seals also protect the bearing from the ingress of contaminants during installation. Using a sealed bearing also means that the grease used to fill the housing and labyrinth seals is independent of the lubrication requirements for the bearing. Therefore, environmentally friendly, biodegradable greases, such as SKF LGGB 2, can be used to fill the housing (→ skf.com/lubrication).

When the SKF self-aligning bearing system is used (→ **page 41**), the labyrinth seal for the CARB toroidal roller bearing should be replaced with a taconite seal.

Fig. 11

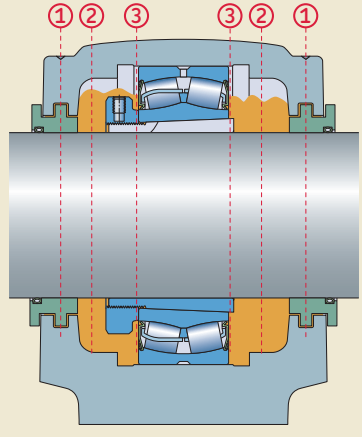

Design considerations

SKF housings are typically designed for self-aligning ball bearings, spherical roller bearings and CARB toroidal roller bearings. These bearings are chosen because they are insensitive to initial misalignment, which normally occurs when the housings are spaced far apart.

Two-bearing housings have inherently aligned bearing seats and therefore can accommodate rigid bearings such as deep groove ball bearings, angular contact ball bearings and cylindrical roller bearings.

Bearing arrangements

Locating/non-locating bearing arrangements

Conventional locating/non-locating bearing arrangements (→ **fig. 15**) are designed to accommodate thermal elongation of the shaft. In these systems, the non-locating bearing must be able to move axially on its seat in the housing.

SKF housings can accommodate bearings in both the locating and non-locating positions. Most standard housings have a bearing seat that is sufficiently wide to enable axial displacement of the non-locating bearing (→ **fig. 12**, "s"). When these housings are used in the locating position, locating (stabilizing) ring(s) should be used to secure the bearing axially in the housing (→ **fig. 13**).

Some SKF housing series are available with a wide bearing seat for axial displacement, designation suffix L, and a bearing seat that matches the width of the bearing to locate it axially, designation suffix F (→ **fig. 14**).

Fig. 12

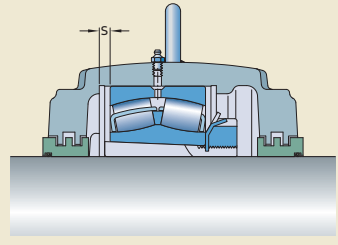

Wide bearing seat for the non-locating bearing position

Fig. 13

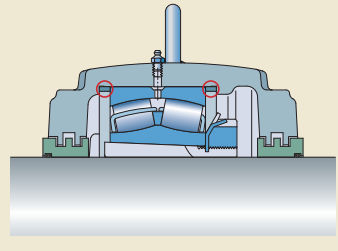

Locating bearing held axially by locating rings

Fig. 14

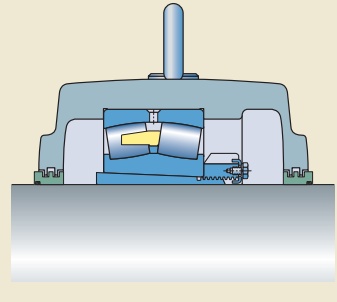

Locating bearing held axially by a matched bearing seat

The SKF self-aligning bearing system

To accommodate misalignment and shaft deflections, conventional self-aligning bearing arrangements use spherical roller or self-aligning ball bearings in both the locating and non-locating bearing positions (→ **fig. 15**). To accommodate thermal elongation of the shaft in these arrangements, the non-locating bearing must be able to move axially on its seat in the housing. Any wear or damage to the housing seat results in a "stick-slip" condition that induces axial loads, friction, and heat into the bearing arrangement.

A better solution is to use a CARB toroidal roller bearing in the non-locating position (→ **fig. 15**). CARB bearings accommodate misalignment and shaft deflections. They also accommodate thermal elongation of the shaft within the bearing, with virtually no friction, to avoid induced axial loads.

Because CARB bearings do not accommodate axial loads, these bearings must always be secured axially in the housing, with either locating (stabilizing) rings or by using a housing variant with an F (or RA for some housings) in its designation suffix.

Compared to conventional self-aligning bearing arrangements, replacing the non-locating bearing with a CARB bearing increases the load carrying capacity of the bearing arrangement, enabling a more compact, and therefore lighter, bearing arrangement to be used. By virtually eliminating induced axial loads, vibration levels and temperatures are reduced and less grease is consumed, resulting in less maintenance. The solution contributes to improved reliability and extended bearing service life.

Typical shaft-bearing combinations

Bearings in SKF housings can be mounted either directly on a shaft or on a sleeve on the shaft. There are four typical combinations (→ **table 8**, **pages 42–43**):

- plain shaft with bearing on an adapter sleeve
- stepped shaft with bearing on an adapter sleeve
- stepped shaft with bearing on a withdrawal sleeve
- stepped shaft with bearing on a cylindrical seat

For information about the shaft-bearing combination alternatives for a particular housing type, refer to **tables 1** to **4**, starting on **page 30**, or the relevant product chapter.

Fig. 15

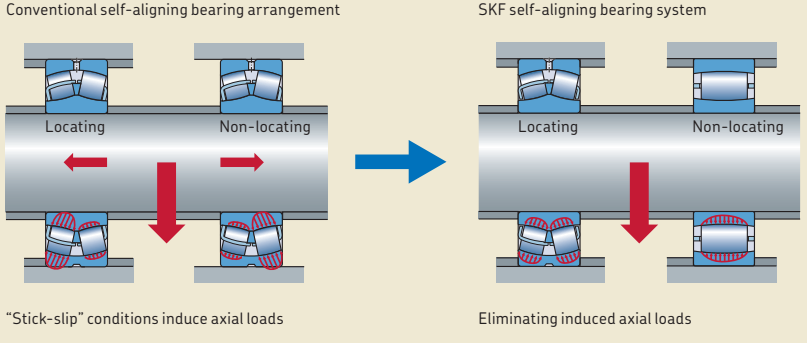

Comparison of typical shaft-bearing combinations

	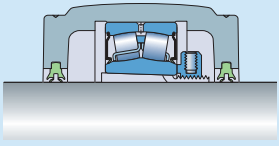 **Plain shaft with bearing on an adapter sleeve**	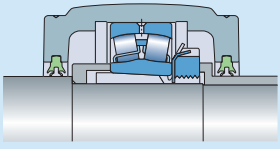 **Stepped shaft with bearing on an adapter sleeve**
Shaft	• Machining not required, drawn round bars (h9 or better) can be used • Maximum shaft strength (no shoulders or undercuts)	• Machining required, typically two steps • Shaft strength weakened by shoulders
Bearing	• Bearing can be mounted at any position on the shaft • Internal clearance changes during mounting (proper drive-up required) • Axial load carrying capacity limited by the adapter sleeve	• Bearing position determined accurately by the stepped ring • Internal clearance changes during mounting (proper drive-up required) • Axial load carrying capacity limited by the shaft sleeve or adapter sleeve in one direction and by the bearing and housing in the other direction
Mounting and dismounting	• 40% less mounting force required compared to other sleeve mounted arrangements as friction only occurs between two mating surfaces	• Other components on the shaft can be located axially against the bearing on its sleeve via spacer sleeves • Easy dismounting as the bearing inner ring is in contact with the stepped ring
Applications	• Long shafts where more than two bearings are required for support • When the final position of the bearing cannot be accurately determined prior to mounting • When machine components are mounted using clamping or tensioning devices so that the shaft does not need to be machined	• Support of shaft ends • Frequent mounting and dismounting

Table 8

	Stepped shaft with bearing on a withdrawal sleeve	Stepped shaft with bearing on a cylindrical seat
	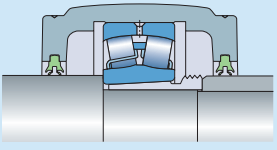	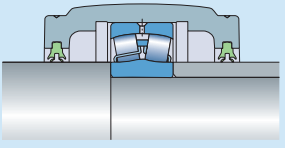
Shaft	• Machining required, typically two steps • Shaft strength weakened by shoulders	• Machining required, typically two steps • Shaft strength weakened by shoulders • Largest shaft diameter for a given bearing size
Bearing	• Bearing position determined accurately by the shaft shoulder • Internal clearance changes during mounting (proper drive-up required) • Axial load carrying capacity limited by the shaft sleeve or withdrawal sleeve in one direction and by the bearing and housing in the other direction	• Bearing position determined accurately by the shaft shoulder • Internal clearance determined by the shaft seat tolerance • Axial load carrying capacity limited by the bearing and housing
Other components	• Other components on the shaft can be located axially against the bearing on its sleeve via spacer sleeves • Easy dismounting with a withdrawal sleeve and hydraulic nut	• Other components can be located axially against the bearing via spacer sleeves • Suitable when large numbers of bearings have to be mounted • Simple axial locating by shaft nut
Application	• Support of shaft ends • Frequent mounting and dismounting	• Support of shaft ends • Frequent mounting and dismounting • Suitable for shock loads or where higher speeds or higher precision are required

Load carrying capacity

The load carrying capacity of a housing depends on many factors:

- the housing material and design and, where applicable, cap bolt strength
- the direction of the load
- the strength of the attachment bolts and support structure
- the condition of the support surface

SKF provides static housing load limits, either in the form of breaking loads or safe loads, for most housings. Where values are not provided, the load carrying capacity is higher for the housing than for the bearing.

Breaking loads can be used to calculate a permissible load, based on a selected safety factor. Safe loads already include a safety factor.

Special attention is required for split housings subjected to cyclic loads or dynamic imbalance. Under these conditions, cap bolt and housing cap strength ($P_{180°}$) should be analyzed carefully. For additional information, contact the SKF application engineering service.

Breaking loads

For most SKF housings, guideline values for the breaking loads P are provided in the relevant product chapter. To obtain the permissible load for a housing, the guideline value should be divided by a factor based on the safety requirements and operating conditions of the application. In general engineering, a safety factor of 6 is typical. The permissible load can only be exploited if the housing is mounted properly and all bolts are tightened to the specified torque values. For split housings, the strength of the cap bolts should also be considered. A minimum safety factor of 2 against cap bolt yield should be used.

The load P_a is the axial breaking load of the housing. If the incorporated bearing is mounted on a sleeve, check the permissible axial load for the sleeve (→ *Axial load carrying capacity for bearings on a sleeve*).

Safe loads

In some regions, safe loads are used instead of breaking loads. These guideline values have been established using accepted engineering practices, taking safety and ultimate tensile strength of the materials into account. They reflect a safety factor of 5 against housing fracture, and where applicable, a minimum factor of 2 against cap bolt yield. The safe loads can only be fully exploited if the housing is mounted properly and all bolts are tightened to the correct torque values.

Axial load carrying capacity for bearings on a sleeve

When using a bearing on a sleeve on a plain shaft, the axial load carrying capacity is limited either by the bearing, sleeve or housing.

For the axial load carrying capacity of the bearing, refer to the product information available online at skf.com/bearings. For the sleeve, the permissible axial load to safely prevent slippage on the shaft is determined by the friction between the shaft and sleeve. Provided the bearing is mounted correctly (→ skf/mount.com), the permissible axial load can be calculated from

$$F_{ap} = 0{,}003\ B\ d$$

where
F_{ap} = maximum permissible axial load [kN]
B = bearing width [mm]
d = bearing bore diameter [mm]

Information about the axial load carrying capacity of the housing is provided in the relevant product chapter.

Specifications for shafts and housing support surfaces

Shaft

Bearing seat

Recommended fits for bearings on solid steel shafts in cast iron housings are provided in the SKF catalogue *Rolling bearings* and are available online at skf.com/bearings.

If adapter or withdrawal sleeves are used, the sleeve seat on the shaft should be machined to tolerance class h9Ⓔ or better. The total radial runnout should be IT5/2 for tolerance class h9Ⓔ.

If bearings are to be mounted directly onto the shaft, the cylindricity tolerance and total runout tolerance of the bearing seat should, depending on the requirements, be one to two IT tolerance grades better than the prescribed dimensional tolerance. Abutments for bearing rings should have a perpendicularity tolerance and total axial runout tolerance that is at least one IT tolerance grade better than the diameter tolerance of the associated cylindrical seat.

Seal seat or counterface

Recommendations are provided in the relevant product chapter. Generally, seal counterfaces should be machined to tolerance class h9Ⓔ or better and the cylindricity should be to tolerance grade IT5.

Surface roughness

At the sleeve and seal positions, the shaft surface should have a surface roughness $R_a \leq 3{,}2$ µm *(125 µin.)*. Recommendations for the surface roughness of cylindrical bearing seats are provided in the SKF catalogue *Rolling bearings* and are available online at skf.com/bearings.

Housing support surface

To maximize bearing service life and prevent deformation of the housing bore, SKF recommends that the flatness of the housing support surface is to tolerance grade IT7 in accordance with ISO 1101. The surface should be finished to a surface roughness $R_a \leq 12{,}5$ µm *(500 µin.)*.

Lubrication

Grease selection

Grease selection is typically driven by the bearing and its operating conditions. The same grease can be used to fill the housing and lubricate the seal.

For information about SKF greases, refer to the product information available online at skf.com/lubrication. The SKF grease selection program *LubeSelect*, also available online at skf.com/lubrication, can be used to select an appropriate grease.

Biodegradable grease for housings with sealed bearings

If sealed bearings are used, the grease used to fill the housing and lubricate the housing seals does not need to be compatible with the grease inside the bearing. This is a good opportunity to use environmentally friendly grease such as SKF LGGB 2. It is a biodegradable, low toxicity grease. For additional information about this grease, refer to the product information available online at skf.com/lubrication.

Initial grease fill

If no other requirements exist, the free space in the bearing should be completely filled with grease and the free space in the housing should be filled to 20 to 40% of its volume. A 40% grease fill is required when bearings have to be relubricated from the side, while a 20% grease fill is used when bearings are lubricated via the outer ring.

For highly contaminated environments and slow speeds, fill the housing to 70 to 80%. For the best protection against contaminants, use the SKF three-barrier solution (→ **page 39**).

Higher speeds can require a reduced grease fill. For additional information, contact the SKF application engineering service. Quantities for the initial grease fill are provided in the individual product chapters.

Relubrication

Grease escape holes

Bearing arrangements in housings that have contact seals, e.g. double-lip or four-lip seals, can be equipped with a grease escape hole to allow used, excess grease to be purged from the housing. The escape hole should be positioned on the side opposite the grease inlet and if applicable, on the same side as the lock nut. For long relubrication intervals, it is often sufficient to remove the housing cap or cover and remove the old grease.

Relubrication via the outer ring

CAUTION: Care should be taken when relubricating spherical roller bearings in the non-locating position via their lubrication feature in the outer ring. There is a risk that the lubrication groove of the bearing will not be aligned with the hole in the centre of the housing cap and the lubricant will not reach the bearing. This can be the case when narrow bearings are mounted in housings with a wide housing seat, e.g. spherical roller bearings in the 222 series mounted in SNL 5(00) series housings, and the application is subjected to large axial movements. Under these circumstances, the bearings should be relubricated from the side.

Fig. 16



SKF tools and products

SKF has a wide assortment of lubrication tools and products for SKF bearing housings. A brief overview is provided here. For additional information, refer to the product information available online at mapro.skf.com and skf.com/lubrication.

Grease meter

The SKF grease meter LAGM 1000E (→ **fig. 16**) accurately measures grease discharge in volume or weight, and in both metric (cm^3 or g) and imperial (fl.oz. or oz.) units. It is suitable for all SKF bearing greases with a consistency class of up to 3 on the NLGI scale.

Automatic lubricators

Automatic lubricators can prevent both over and under-greasing.

SKF SYSTEM 24 lubricators (→ **fig. 17**) are automatic single point lubricators suitable for a wide range of applications and operating conditions. They are compact, easy to install and have a transparent container to check the amount of lubricant that is available. There are two series of lubricators: Gas driven lubricators include LAGD 60 (60 ml) and LAGD 125 (125 ml); Electro-mechanical driven lubricators include LAGE 125 (122 ml) and LAGE 250 (250 ml).

The SKF MultiPoint lubricator LAGD 400 (→ **fig. 18**) is a centralized automatic lubricator that simultaneously lubricates up to eight points. It is compact, easy to install and has a transparent container to check the amount of lubricant that is available.

Fig. 17



Fig. 18



Oil levellers

SKF oil levellers LAHD 500 (→ **fig. 19**) and LAGH 1000 are designed to automatically adjust the oil level in a bearing housing. The levellers allow the oil level to be adjusted during operation, optimizing machine performance and increasing the service life of the bearings. The transparent container enables the oil level to be inspected.

Adapters to change connection threads

The assortment of adapters in the LAPN series (→ **fig. 20**) are available, to convert, for example, from a 1/8 – 27 NPSF thread to a G 1/4 thread.

Caps and tags for grease fittings

TLAC 50 caps and tags provide a space to properly identify the lubrication point(s) on a bearing housing as well as protect the grease fittings from the ingress of contaminants (→ **fig. 21**). The labels can also be used in conjunction with the SKF Lubrication Planner.

Centralized lubrication systems

The SKF Multilube pumping unit (→ **fig. 22**) is a compact, all-in-one unit for lubricating individual machines and equipment. Designed for indoor and outdoor use, the unit is suitable for all pumpable oils and greases and can be used in single line, dual line and progressive lubrication systems.

Circulating oil lubrication concept

Oil circulation lubrication is needed in applications where the lubrication point (bearing) must be cooled while lubricated. An oil circulation system consists of a pumping station with a large oil reservoir and oil flow meters.

SKF Flowline reservoir (→ **fig. 23**) is round in shape and the plate construction inside improves the oil movement so much, that the efficiency is over 90%. This means, the reservoir size can be reduced even down to 1/3 of the traditional reservoir and still the real retention time of the oil is the same or better. Plate construction makes water and air separation very effective and the oil remains in very good condition, which means longer bearing life.

Fig. 19



Fig. 20



Savings in the oil purchase and handling costs are significant and the entire pumping station can be installed in the space taken by the old reservoir only.

Oil flow meters are always needed as a part of an oil circulation system to regulate and monitor oil flow. SKF Flowline Monitor is a digital oil flow meter, where the measurement is viscosity compensated and the reading by clear numbers is always correct, independent of temperature. On-line monitoring and setting parameters can also be done remotely.

Fig. 22



Fig. 21



Fig. 23



Mounting

Mounting instructions are supplied with most SKF bearing housings, or with the corresponding seal kit. For additional information about mounting, refer to the *SKF bearing maintenance handbook* or the information available online at skf.com/mount.

Preparations prior to mounting

Mounting housings (and bearings) requires care, accuracy and the appropriate tools. Prior to mounting, do the following:

- Make sure that the work area is clean.
- Study any drawings or instructions to determine the correct order in which to assemble the various components.
- Make sure that all the necessary components and tools are at hand.
- Clean the support surface.
- Check that the support surface meets the requirements for flatness (→ *Specifications for shafts and housing support surfaces*, **page 45**).
- Check that the shaft seats and seal counterfaces meet the requirements for dimensional and form accuracy, roughness and hardness (→ *Specifications for shafts and housing support surfaces*, **page 45**).
- Chamfer or round any shaft edges over which a seal lip will pass.

SKF tools and products

The SKF assortment of mounting tools and products includes mechanical tools, hydraulic tools, heating equipment and gloves. For additional information, refer to the product information available online at mapro.skf.com.

Lifting housings

Many SKF bearing housings are supplied with eye bolts for safe and easy handling. The eye bolts are designed to support the weight of the housing only, and not the incorporated bearing or shaft.

When lifting, make sure that the eye bolts are only subjected to load in the direction of the shank axis. The load should be evenly distributed across the number of eye bolts.

Attachment bolt tightening

Applying the specified torque to a bolt during installation is extremely important. Improper torque values can lead to machinery movement during operation. This can cause misalignment between machine parts, which will eventually lead to premature damage to bearings and other components.

Recommended tightening torque values are provided in the product chapters and are based on bolt manufacturers' recommendations.

All bolts should be tightened with an accurate torque wrench (in at least two stages) or a hydraulic bolt tensioner. SKF recommends using a HYDROCAM hydraulic bolt tensioner in applications where the attachment bolt has an end protruding above the tightening nut. These tensioners reduce the risk of over tightening and enable bolts to be installed accurately without the need of a torque wrench. The tensioners also provide uniform assembly preload or uniform bolt elongation.

Using shims

Shims can be used to raise the centre height of a housing. SKF recommends using shims made of stainless sheet steel with sufficient strength and the ability to withstand corrosion from several media. Shims made from soft metals like copper or brass typically compress over time, causing looseness, which can eventually lead to misalignment. Whenever possible, use only one shim and never stack more than three shims.

CAUTION: Make sure that the shim covers the complete contact surface between the housing base and the support surface (→ **fig. 23**). If shims are placed under the housing feet only, the bearing seat can distort.

Using locating (stabilizing) rings

A bearing in the locating position must be secured axially in the housing. If the bearing seat in the housing and the bearing width do not match, locating (stabilizing) rings (→ **fig. 24**) are required. Typically, two locating rings are required per housing. One ring should be placed on each side of the bearing. If only one locating ring is required, it should be installed on the same side as the lock nut. When placing

a locating ring in position, make sure that the open end of the locating ring is facing up.

CARB toroidal roller bearings, which are used exclusively in the non-locating position, require locating rings when the bearing seat in the housing and the bearing width do not match. For information about which locating rings are required for a bearing in a particular housing, refer to the relevant product chapter.

Installing seals

The seal counterface should meet the specifications for surface roughness and roundness (→ *Specifications for shafts and housing support surfaces*, **page 45**), and should be clean. If the counterface shows any signs of wear, repair it. This can be done easily with an SKF SPEEDI-SLEEVE or a large diameter wear sleeve (LDSLV). If repair is not possible, replace the shaft.

In general, the seal and counterface should be coated lightly with the lubricant used in the application.

When installing seals, make sure that the seal is oriented correctly. Many seals are not symmetrical and can be installed to either exclude contaminants or retain the lubricant.

Split seals consist of two halves, which can be installed around the shaft. They are easier to replace and can ease mounting.

Felt seals should be soaked in hot oil prior to installation.

Fig. 23

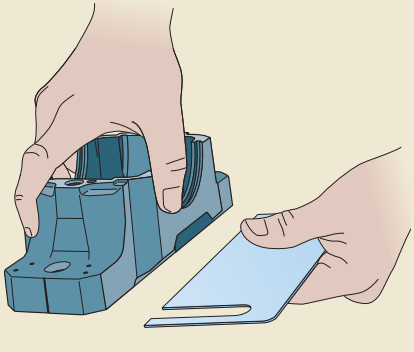

Fig. 24

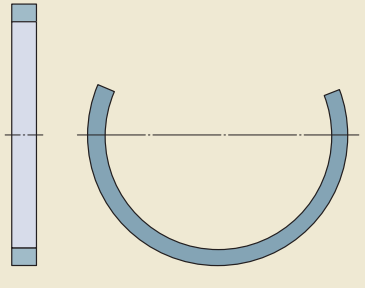

Inspection and condition monitoring

SKF housings and roller bearing units should be inspected regularly for damage and lubricant leaks. SKF also recommends a visual inspection of the seals, plugs, bolts and housing joints. The frequency of these inspections depends on the operating conditions and potential downtime consequences but should be done as part of a regularly scheduled maintenance program.

Where oil bath lubrication is used, the oil level should be monitored regularly. During operation, the oil level may drop below the minimum level. If that should happen, and oil needs to be added while the machine is running, keep the oil level well below the maximum oil level on the indicator or overfilling can result.

For additional information about inspection techniques and corrective maintenance actions, refer to the *SKF bearing maintenance handbook*.

SKF also recommends monitoring the condition of all bearings on a regular or continuous basis to detect early signs of bearing damage. Trending the condition of the bearing makes it possible to analyze the root cause of an impending failure, and plan for corrective action. Trending can also eliminate unplanned downtime. The most reliable way to do condition monitoring is through vibration analysis.

Vibration analysis

Many SKF housings are prepared for condition monitoring and are supplied with drilled and tapped holes to accommodate sensors. For other housings, dimples indicate the position where sensors can be located. For information about the condition monitoring possibilities for a particular housing type, refer to the relevant product chapter.

SKF has a comprehensive assortment of vibration detection, analysis and diagnostic products, from light hand-held instruments to fully integrated monitoring systems. For additional information, refer to the product information available online at skf.com/cm.

Storage

SKF housings, roller bearing units and associated components, including the seals, should be stored under controlled temperature and humidity conditions in a clean, dry environment. Variations in temperature and humidity should be avoided but gradual, seasonal variations of a gradual nature are acceptable. As a general rule, SKF recommends the following storage conditions:

- temperature: < 30 °C *(< 85 °F)* for long-term storage
- relative humidity: < 60%
- If peaks above 65% occur regularly, a dehumidifier is required.
- temperature fluctuation: max. 3 °C / 48 hours

Under these conditions, housings can be stored for up to 10 years. Roller bearing units should not be subjected to vibration during storage as this could cause false brinelling damage to the bearing. Depending on the actual storage conditions, the lubricating properties of the initial grease fill might deteriorate. Generally SKF roller bearing units should not be stored for more than 3 years.



Split plummer block housings SNL 2, 3, 5 and 6 series

Bearing types
- Self-aligning ball bearings
- Spherical roller bearings
- CARB toroidal roller bearings

Bearing dimension series
- 02, 03, 22, 23, 32

Shaft diameter range
- 20 to 30 mm and 60 to 160 mm
- 3/4 to 1 1/8 in. and 2 1/2 to 5 1/2 in.

Typical shaft-bearing combinations
- Plain shaft with bearing on an adapter sleeve
- Stepped shaft with bearing on a cylindrical seat

Seals
- Four-lip
- Labyrinth
- Felt
- V-ring
- Heavy-duty

Lubrication
- Grease

Materials
- Grey cast iron
- Spheroidal graphite cast iron

Mounting
- Two-bolt mounting
- Four-bolt mounting

Compliance to standards
- ISO 113 (two-bolt plummer block housings)

Supersedes
- SN, SNA, SNH series

SNL plummer block housings are the most popular SKF bearing housings on the market, developed to be the first choice for design, quality and economy.

SNL plummer block housings enable the incorporated bearings to achieve maximum service life with less need for maintenance. Different housing variants and seal designs are available, making the use of tailored housings virtually unnecessary and enabling cost-effective bearing arrangements to be made.

For sizes 507 up to and including 515-612, SNL housings are replaced by a new generation of plummer block housings (→ *Split plummer block housings SE 2, 3, 5 and 6 series*, starting on **page 139**). From size 516-613 upward, SNL plummer block housings in the 2, 3, 5 and 6 series remains.

Split plummer block housings SNL 2, 3, 5 and 6 series

Designations 57

Standard housing design 59
Features and benefits 60
Housing material 61
Paint, corrosion protection 61
Dimension standards 61
Interchangeability 61

Housing variants 62
Housing material 62
Attachment bolt holes 62
Bearing seat tolerance 64
Housings for oil lubrication 64

Sealing solutions 64
Four-lip seals 66
V-ring seals 66
Felt seals or strips 66
Labyrinth seals 66
Taconite heavy-duty seals with a radial labyrinth 66
End covers 68

Using sealed bearings 68

Special seals 70
High-temperature seals 70
Taconite heavy duty seals with an axial labyrinth 70
Bearing isolators 71
Custom seals 71

Design considerations 72
Typical shaft-bearing combinations . . . 72
Locating and non-locating bearing positions 72
Load carrying capacity 73
Operating temperature 74
Operating speed 74
Attachment bolt recommendations 77

Lubrication 78
Initial grease fill 78
Relubrication 78

Mounting 82

Condition monitoring 83

Accessories 84

Ordering information 84

Product tables
2.1 SNL and SE plummer block housings for bearings on an adapter sleeve, metric shafts 86
2.2 SNL and SE plummer block housings for bearings on an adapter sleeve, inch shafts 100
2.3 SNL and SE plummer block housings for bearings on a cylindrical seat . . 120

Designations

Designation system for SNL plummer (pillow) block housings

SNL 518-615 SN

Prefixes for bolt holes

_	Two oblong cast holes for attachment bolts
F	Four oblong cast holes for attachment bolts
S	No holes for attachment bolts (drilled holes can be supplied)

Series

SNL	Standard plummer block housing

Material

_	Grey cast iron
D	Spheroidal graphite cast iron

Size identification

2(00)	Housing for bearings on a cylindrical seat, diameter series 2
3(00)	Housing for bearings on a cylindrical seat, diameter series 3
5(00)	Housing for bearings on an adapter sleeve, diameter series 2
6(00)	Housing for bearings on an adapter sleeve, diameter series 3
..(00)	Size code of the bearing, (00) × 5 = bearing bore diameter [mm]

Suffixes[1)]

V	Grease escape hole in the housing base
TURU	Housing prepared for oil lubrication, including seals
T	Drilled and tapped hole 1/4-28 UNF at one side of the housing cap to lubricate a seal. Grease fitting AH 1/4-28 SAE-LT supplied with the housing
TD	Drilled and tapped hole 1/4-28 UNF at both sides of the housing cap to lubricate the seals. Two grease fittings AH 1/4-28 SAE-LT supplied with the housing
SN	Drilled and tapped M8 hole for sensor in position 3 (→ **fig. 16**, **page 83**)
/MS1	Two drilled holes for attachment bolts
/MS2	Four drilled holes for attachment bolts

[1)] When multiple suffixes are used, they are listed in the same order as shown here.

Split plummer block housings SNL 2, 3, 5 and 6 series

Designation system for seals

TSN 518 L_

Series

TSN	Seal for SNL plummer block housings
FS	Felt strip
FSB	Felt strip for high operating temperature

Size identification

2(00)	Housing for bearings with a cylindrical bore, diameter series 2
3(00)	Housing for bearings with a cylindrical bore, diameter series 3
5(00)	Housing for bearings on an adapter sleeve, diameter series 2
6(00)	Housing for bearings on an adapter sleeve, diameter series 3
(00)	Size code of the bearing, (00) × 5 = bearing bore diameter [mm]
…	For felt strips only, number indicating the length of the strip

Seal type

A	V-ring seal
C	Felt seal
CB	Felt seal for high operating temperature
L	Four-lip seal
S	Labyrinth seal
NB	Taconite heavy-duty seal with axial labyrinth and V-ring seal
NC	Taconite heavy-duty seal with axial labyrinth
ND	Taconite heavy-duty seal with radial labyrinth and V-ring seal

Indication for an inch shaft

A, E	Seal for inch shaft

Designation system for end covers

ASNH 518-615

Series

ASNH	End cover for SNL plummer block housings

Size identification

…	Housing size identification

Designation system for locating rings

FRB 17.5/160

Series

FRB	Locating ring for SKF bearing housings

Size identification

…	Width and outside diameter of the locating ring [mm]

Standard housing design

SNL plummer (pillow) block housings in the 2, 3, 5 and 6 series are split housings consisting of a cap and base (→ **fig. 1**). They have two holes cast into the base for attachment bolts. The housings are designed on the "building block" principle to enable a wider choice of bearings and seals as well as a variety of shaft-bearing combinations.

Fig. 1

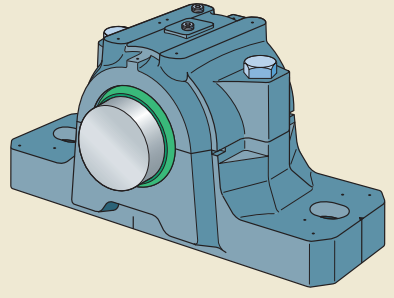

Features and benefits

SNL plummer block housings in the 2, 3, 5 and 6 series have the following features and benefits:

Stiff housing

The housing base is reinforced with ribs and has extra material surrounding the holes for the attachment bolts (→ **fig. 2**). The attachment bolts can be preloaded to locate the housing without deforming the housings base or bore.

Good heat dissipation

Additional ribs in the housing base (→ **fig. 3**) increase the contact area between the housing base and the support surface to improve the heat flow from the bearing outer ring to the support surface.

Grease guiding system

For more efficient relubrication from the side, SNL housings from sizes 216 and 516-613 upwards have an integrated flange that guides grease from the grease fitting directly to the bearing (→ **fig. 4**).

Caps and bases individually marked

The housing cap and base are matched during manufacture and are not interchangeable with the caps and bases of other housings. To prevent any mismatches, a unique serial number is marked on both the housing cap and the base (→ **fig. 5**).

Dimples to locate accessories

Dimples cast into the housing cap indicate where grease fittings and condition monitoring sensors can be mounted for maximum effectiveness (→ **fig. 6**).

Simple mounting

To simplify mounting and make alignment more accurate, lines indicating the centre of the bearing seat and the housing bore axis are cast into the housing base. Dimples indicate the position for dowel pins (→ **fig. 7**). Mounting instructions are supplied with each seal pack.

Housings from size 524-620 and above are supplied with an eye bolt on the cap for safe and easy handling.

Fig. 2

Reinforcement rib in the base

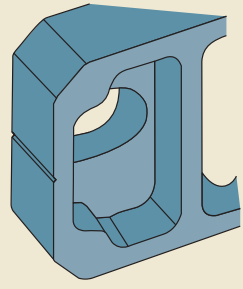

Fig. 3

Extra rib for better heat conduction

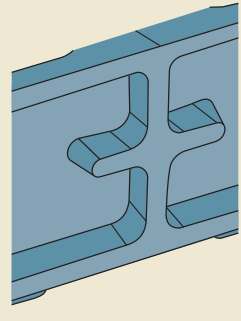

Fig. 4

Grease guiding system

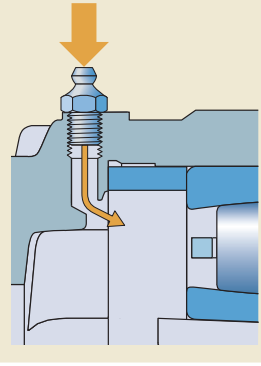

Fig. 5

Individually marked cap and base

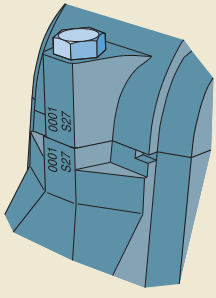

Fig. 6

Dimples indicate positions for accessories

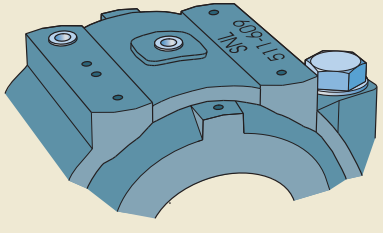

Fig. 7

Cast indications mark the centre of the housing bore

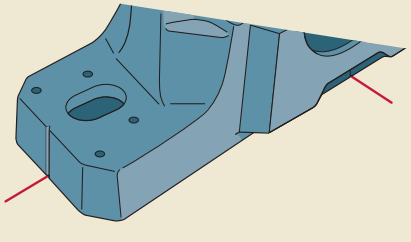

Housing material

SNL housings are made of grey cast iron.

Paint, corrosion protection

SNL housings are painted black (RAL 9005) using a water based alkyd/acryl paint. The paint protects the housing in accordance with ISO 12944-2, corrosivity category C2 (i.e. exterior atmospheres with low level of pollution, interior atmospheres where condensation may occur). The paint is not affected by most lubricating and engine oils, cutting fluids or alkalescent washing chemicals. Housings can be repainted with most water or solvent based 1- or 2-component paints.

Unpainted surfaces are protected by a solventless rust inhibitor.

Dimension standards

Boundary dimensions are in accordance with ISO 113 for two-bolt plummer block housings.

Interchangeability

SNL plummer block housings in the 2, 3, 5 and 6 series are dimensionally interchangeable with the earlier SN, SNA and SNH series.

Housing variants

In addition to standard design SNL plummer (pillow) block housings, a number of variants are also available. Variants include housings made of different materials, alternative attachment bolt hole configurations, different bearing seat tolerance classes and modifications for special applications.

Housing material

For applications where extra strength is needed, SNL housings are also available in spheroidal graphite cast iron. Housings made of spheroidal graphite cast iron are available from size 516-613 and are supplied with a solid base (no holes for attachment bolts) as standard. From size 516-613 the housings can be supplied with four oblong holes cast in the base. All housings made of spheroidal graphite cast iron can be supplied with two drilled holes for attachment bolts (designation suffix /MS1).

Attachment bolt holes

SNL plummer block housings can be supplied with the following bolt hole configurations:

- four cast holes
  Dimensions are listed in **table 1**. These housings are designated FSNL.

Table 1

Dimensions for four cast attachment bolt holes

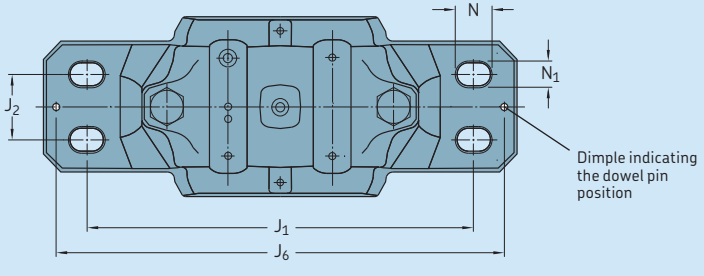

Housing Size		Dimensions N	N_1	J_1	J_2	J_6	Attachment bolts Size	Tightening torque[1]
–		mm					–	Nm
FSE 211	**FSE 511-609**	20	15	210	35	234	M 12	80
FSE 212	**FSE 512-610**	20	15	210	35	234	M 12	80
FSE 213	**FSE 513-611**	20	15	230	40	252	M 12	80
FSE 215	**FSE 515-612**	20	15	230	40	257	M 12	80
FSNL 216	**FSNL 516-613**	24	18	260	50	288	M 16	200
FSNL 217	**FSNL 517**	24	18	260	50	292	M 16	200
FSNL 218	**FSNL 518-615**	24	18	290	50	317	M 16	200
	FSNL 519-616	24	18	290	50	317	M 16	200
	FSNL 520-617	24	18	320	60	348	M 16	200
	FSNL 522-619	24	18	350	70	378	M 16	200
	FSNL 524-620	24	18	350	70	378	M 16	200
	FSNL 526	28	22	380	70	414	M 20	385
	FSNL 528	32	26	420	80	458	M 24	665
	FSNL 530	32	26	450	90	486	M 24	665
	FSNL 532	32	26	470	90	506	M 24	665

[1] Recommended by bolt manufacturers.

- four drilled holes
  These variants are available for housings with two cast bolt holes, designation SNL, and for housings made of spheroidal graphite cast iron with a solid base, designation SSNLD.
  Dimensions are listed in **table 2**. These housings have the designation suffix /MS2.
  All two-bolt housings have dimples, which mark the bolt hole positions for four-bolt mounting.

- two drilled holes
  This variant is available for housings made of spheroidal graphite cast iron with a solid base, designation SSNLD.
  Dimensions are listed in **table 2**. The housings have the designation suffix /MS1.

Table 2

Dimensions for drilled attachment bolt holes

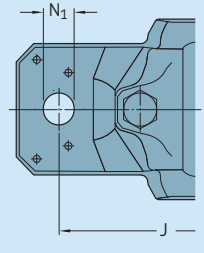

SSNLD.../MS1

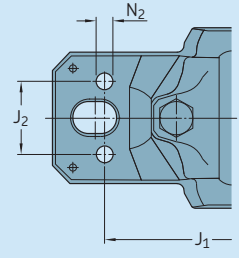

SNL.../MS2

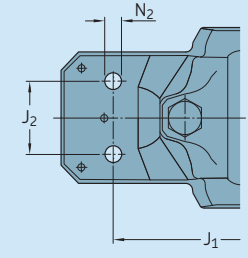

SSNLD.../MS2

Housing Size		Two drilled holes (/MS1) Dimensions J	N_1	Appropriate bolt size		Four drilled holes (/MS2) Dimensions J_1	J_2	N_2	Appropriate bolt size	
–		mm		–	in.	mm			–	in.
SNL 205	**SNL 505**	–	–	–	–	114	25	9	M 8	5/16
SNL 206-305	**SNL 506-605**	–	–	–	–	130	29	9	M 8	5/16
SE 207	**SE 507-606**	–	–	–	–	138	29	9	M 8	5/16
SE 208-307	**SE 508-607**	–	–	–	–	160	34	11	M 10	3/8
SE 209	**SE 509**	–	–	–	–	160	34	11	M 10	3/8
(S)SE(D) 210	**(S)SE(D) 510-608**	170	15	M 12	1/2	160	34	11	M 10	3/8
(S)SE(D) 211	**(S)SE(D) 511-609**	210	18	M 16	5/8	200	40	14	M 12	1/2
(S)SE(D) 212	**(S)SE(D) 512-610**	210	18	M 16	5/8	200	40	14	M 12	1/2
(S)SE(D) 213	**(S)SE(D) 513-611**	230	18	M 16	5/8	220	48	14	M 12	1/2
(S)SE(D) 215	**(S)SE(D) 515-612**	230	18	M 16	5/8	220	48	14	M 12	1/2
(S)SNL(D) 216	**(S)SNL(D) 516-613**	260	22	M 20	3/4	252	52	18	M 16	5/8
(S)SNL(D) 217	**(S)SNL(D) 517**	260	22	M 20	3/4	252	52	18	M 16	5/8
(S)SNL(D) 218	**(S)SNL(D) 518-615**	290	22	M 20	3/4	280	58	18	M 16	5/8
	(S)SNL(D) 519-616	290	22	M 20	3/4	280	58	18	M 16	5/8
	(S)SNL(D) 520-617	320	26	M 24	7/8	300	66	18	M 16	5/8
	(S)SNL(D) 522-619	350	26	M 24	7/8	320	74	18	M 16	5/8
	(S)SNL(D) 524-620	350	26	M 24	7/8	330	74	18	M 16	5/8
	(S)SNL(D) 526	380	28	M 24	1	370	80	22	M 20	3/4
	(S)SNL(D) 528	420	35	M 30	1 1/4	400	92	26	M 24	7/8
	(S)SNL(D) 530	450	35	M 30	1 1/4	430	100	26	M 24	7/8
	(S)SNL(D) 532	470	35	M 30	1 1/4	450	100	26	M 24	7/8

Bearing seat tolerance

SNL housings can be supplied with different bearing seat tolerance classes, e.g. for applications prone to vibration, with rotating outer ring load, or for applications operating at high temperatures.

For additional information, contact the SKF application engineering service.

Housings for oil lubrication

For oil lubrication, special seals are required to prevent oil leakage. Oil seals require a modified housing and therefore these housings are supplied together with the seals as a unit. SNL housings are available for oil lubrication from size 516-613. The housing with oil seals is identified by the suffix TURU, e.g. SNL 524 TURU.

SNL plummer block housings have a small oil sump. Be careful not to overfill the sump, or leaks can result. SONL plummer block housings are specially designed for oil lubrication and may be more advantageous. For detailed information refer to *Split plummer block housings SONL series* (→ **page 349**).

Sealing solutions

SNL plummer (pillow) block housings are available with different standard sealing solutions (→ **fig. 8**):

- four-lip seals (TSN .. L)
- V-ring seals (TSN .. A)
- felt seals (TSN .. C) or felt strips (FS 170)
- labyrinth seals (TSN .. S)
- taconite heavy-duty seals (TSN .. ND)
- end covers (ASNH ..)

Table 3 provides an overview of the characteristics and suitability of each sealing solution. Details are provided in the following text. This information should be used as a guideline, and does not substitute for testing a seal in its application.

Fig. 8

Standard sealing solutions for SNL plummer block housings in the 2, 3, 5 and 6 series

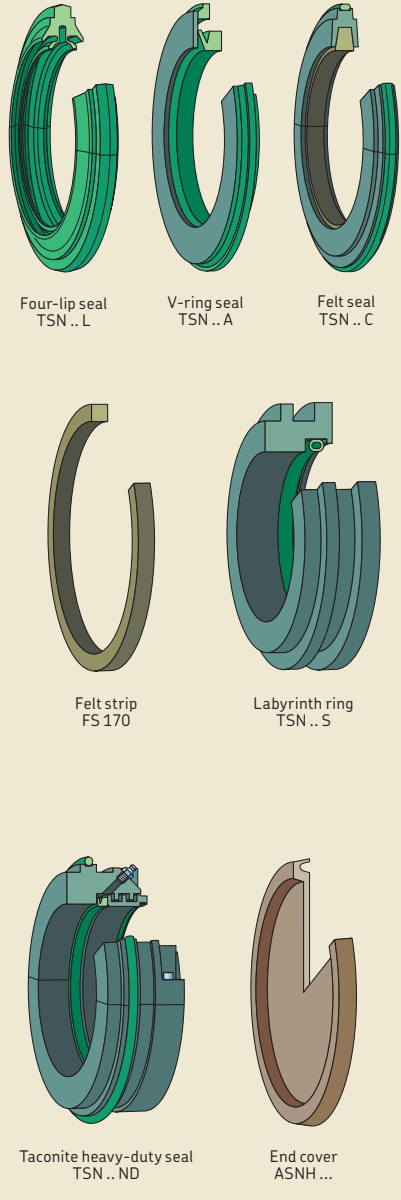

Table 3

Standard sealing solutions for SNL plummer block housings



Seal							
Type	Four-lip split	V-ring	Felt seal split	Felt strip split	Labyrinth	Taconite	End cover
Designation	TSN .. L	TSN .. A	TSN .. C	FS 170	TSN .. S	TSN .. ND	ASNH ..
Material	thermoplastic polyester elastomer	nitrile rubber, steel	felt, nitrile rubber, aluminum	felt	steel, silicone	steel, nitrile rubber	polymer
Seals per pack	2 seals	2 seals	2 seals	1 strip[2]	1 seal	1 seal	1 end cover
Application conditions and requirements							
Temperature [°C]	–40 to +100	–40 to +100	–40 to +100	–40 to +100	–50 to +200	–40 to +100	–40 to +110
Temperature [°F]	–40 to +210	–40 to +210	–40 to +210	–40 to +210	–60 to +390	–40 to +210	–40 to +230
Max. circumferential speed[1] [m/s]	13	7[2]	4[2]	4[2]	not limited	12	n/a
Max. misalignment [°]	1 to 0,5	1,5 to 1	0,5	0,5	0,3	0,5	n/a
Low friction	++	++	–	–	++	+	n/a
Axial shaft displacement	++	–	++	++	+	+	n/a
Vertical arrangement	+	++[3]	– –	– –	– –	–	++
Replacement	++	–	+	+	–	–	++
Shaft tolerance class	h9Ⓔ	n/a	h9Ⓔ	h9Ⓔ	h9Ⓔ	h9Ⓔ	n/a
Shaft roughness R_a [µm]	≤ 3,2	n/a	≤ 3,2	≤ 3,2	≤ 3,2	≤ 3,2	n/a
Sealing suitability							
Dust	++	+	–	–	–	++	++
Fine particles	++	+	–	–	+	++	++
Coarse particles	++	+	+	+	+	++	++
Chips	+	– –	+	+	++	++	++
Liquids when sprayed	+	+	–	–	– –	++	++
Direct sunlight	+	– –	++	++	++	++	++

Symbols: n/a not applicable, ++ very suitable, + suitable, – limited suitability, – – unsuitable

[1] To convert circumferential speeds to rotational speeds → **table 7, page 37**
[2] Higher speeds are possible. For details, refer to the text about the relevant seal.
[3] For details see text about the relevant seal.

Four-lip seals

Four-lip seals replace the former double-lip seals (TSN .. G). When compared to double-lip seals, the new seals are more effective. They also generate less friction, which enables higher shaft speeds. Four-lip seals are horizontally split and easy to mount.

The permissible angular misalignment for seals mounted on shafts ≤ 100 mm in diameter is approximately 1° and approximately 0,5° for larger shafts.

V-ring seals

V-ring seals consist of a V-ring and a sheet steel sealing washer with a vulcanized rubber lip. The rubber lip fits into the seal groove in the housing. The washer is protected against corrosion.

V-rings can accommodate circumferential speeds up to 7 m/s. For circumferential speeds between 7 and 12 m/s, they should be located axially on the shaft. At speeds above 12 m/s, a support ring must be used to prevent the seal from lifting. Recommended dimensions for appropriate support rings for axial and radial location are provided in **table 4**. Housing sizes 205 to 211 and 306 to 314 cannot be used with a support ring and are therefore not suitable for V-ring seals at operating speeds above 7 m/s.

The permissible angular misalignment for V-ring seals is approximately 1,5° for a 50 mm shaft decreasing to approximately 1° for shaft diameters ≥ 150 mm.

The axial movement of the shaft relative to the housing is limited to ±1 mm for shaft diameters up to 65 mm, to approximately ±1,2 mm for shaft diameters up to 100 mm and to approximately ±1,5 mm for larger shaft diameters.

For arrangements with a vertical shaft, the V-ring of the lower seal should be mounted inside the housing.

Felt seals or strips

Felt seals or strips are simple and effective. At circumferential speeds above 4 m/s, a small gap forms between the felt and shaft, transforming the contact seal into a non-contact, gap-type seal.

In applications where bearings are mounted on a plain shaft with an adapter sleeve, split felt ring seals are typically used.

If the bearings are to be installed on a stepped shaft with a cylindrical seat (housing sizes 205 to 218 inclusive), loose felt strips can be used. The strips are 170 mm in length. They should be cut to the correct length and soaked in hot oil for a few minutes prior to mounting. The required number of strips per housing (for both sides) is listed in the product tables (→ **pages 86** to **137**).

Labyrinth seals

For applications where there are high speeds or extreme temperatures, SKF recommends using labyrinth seals. Labyrinth rings, mounted on the shaft, form a multi-stage labyrinth seal with the housing seal grooves. Hollow, silicone rubber cords (2 × 4 mm), supplied with the rings, hold the rings in place on the shaft.

Taconite heavy-duty seals with a radial labyrinth

For bearing arrangements that must operate under highly contaminated conditions, such as those encountered in mining, taconite heavy-duty seals, which can be filled with grease, are recommended. Grease enhances the sealing effect and extends the service life of the seals.

Taconite heavy-duty seals are labyrinth seals combined with a V-ring seal. The inner ring of the labyrinth seal is solid but the outer ring is split. They can be relubricated via a grease fitting in the main body of the seal.

The axial movement of the shaft relative to the housing is limited to ±1 mm for shaft diameters up to 65 mm, approximately ±1,2 mm for shaft diameters up to 100 mm and ±1,5 mm for larger shaft diameters.

Table 4

Recommended dimensions for support rings for V-ring seals

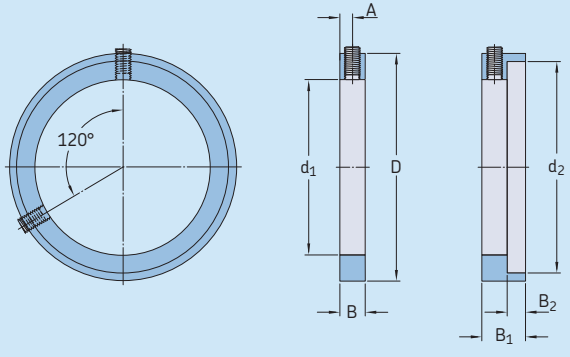

7–12 m/s >12 m/s

Shaft diameter	Dimensions							Grub screw to DIN 913	V-ring seal Standard designation	Alternative designation
d_a, d_b[1]	d_1	d_2	B	B_1	B_2	D	A			
–	mm							–	–	
20	20	27,2	5	8,5	3,5	30	2,5	M 3×5	20 VA R	CR 400200
25	25	32,1	5	8,5	3,5	35	2,5	M 3×5	25 VA R	CR 400250
30	30	37,2	5	8,5	3,5	40	2,5	M 3×5	30 VA R	CR 400300
35	35	42,2	5	8,5	3,5	45	2,5	M 3×5	35 VA R	CR 400350
40	40	49,1	7	11,5	4,5	53	3,5	M 4×5	40 VA R	CR 400400
45	45	54	7	11,5	4,5	–[2]	3,5	M 4×5	45 VA R	CR 400450
50	50	59,1	7	11,5	4,5	–[2]	3,5	M 4×5	50 VA R	CR 400500
55	55	64,1	7	11,5	4,5	–[2]	3,5	M 4×5	55 VA R	CR 400550
60	60	69,1	7	11,5	4,5	–[2]	3,5	M 4×5	60 VA R	CR 400600
65	65	74,1	7	11,5	4,5	–[2]	3,5	M 4×5	65 VA R	CR 400650
70	70	81	9	15	6	84	4,5	M 5×6	70 VA R	CR 400700
75	75	86	9	15	6	89,5	4,5	M 5×6	75 VA R	CR 400750
80	80	91	9	15	6	94,5	4,5	M 5×6	80 VA R	CR 400800
85	85	96	9	15	6	100	4,5	M 5×6	85 VA R	CR 400850
90	90	101	9	15	6	105	4,5	M 5×6	90 VA R	CR 400900
95	95	106	9	15	6	109	4,5	M 5×6	95 VA R	CR 400950
100	100	111	9	15	6	115	4,5	M 5×6	100 VA R	CR 401000
110	110	122,9	10	17,5	7,5	128	5	M 6×8	110 VA R	CR 401100
115	115	127,4	10	17,5	7,5	133	5	M 6×8	110 VA R	CR 401100
125	125	138,1	10	17,5	7,5	143	5	M 6×8	130 VA R	CR 401300
135	135	147,5	10	17,5	7,5	153	5	M 6×8	130 VA R	CR 401300
140	140	152,9	10	17,5	7,5	158	5	M 6×8	140 VA R	CR 401400
145	145	158,1	10	17,5	7,5	163	5	M 6×8	150 VA R	CR 401500
155	155	167,5	10	18,5	8,5	173	5	M 6×8	150 VA R	CR 401500
165	165	179,9	10	18,5	8,5	185,5	5	M 6×8	170 VA R	CR 401700
175	175	189,3	10	18,5	8,5	195	5	M 6×8	170 VA R	CR 401700

[1] d_a: shaft diameter for bearings on an adapter sleeve
d_b: shaft diameter for bearings on stepped shafts
[2] Contact the SKF application engineering service for more information.

End covers

Housings at the end of a shaft should have an end cover that fits into the seal groove in the housing.

For applications where temperatures exceed 110 °C *(230 °F)*, steel end covers should be used. These can be cut from sheet steel and placed in the seal groove. Use a hollow silicone rubber cord to hold the cover in place. Seal groove dimensions are provided in **table 5**.

Details of the permissible length of the shaft end are listed in **table 6**.

Using sealed bearings

Using sealed bearings in housings with standard seals is a good solution for highly contaminated environments. The sealed bearing together with the housing seal and grease provide three layers of protection (→ *SKF three-barrier solution*, **page 39**).

SNL housing seals can be used together with SKF sealed self-aligning bearings. When using taconite heavy-duty seals, a sealed bearing does not enhance the sealing effect during operation, but still protects the bearing against contaminants during mounting.

Table 5

Seal groove dimensions

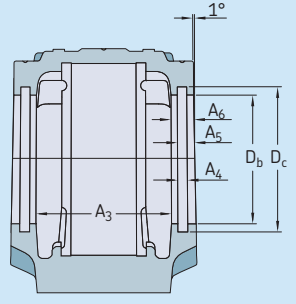

Housing Size	Dimensions A_3	A_4	A_5	A_6	D_b	D_c
–	mm					
SNL 205	44	5	7,5	10	36,5	44,5
SNL 206-305	54	5	7,5	10	46,5	54,5
SE 207	58	5	8	11	56,5	64,5
SE 208-307	61	5	8	11	62	70,5
SE 209	59	5	9	12	67	75,5
SE 210	64	5	9	12	72	80,5
SE 211	69	5	9	12	77	85,5
SE 212	79	5	9	12	87	95,5
SE 213	82	5	9	13	92,5	101
SE 215	87	5	9	13	102,5	111
SNL 216	92	5	9	13	108	116,5
SNL 217	97	5	9	13	112	120,5
SNL 218	112	5	9	13	120	128,5
SNL 505	45	5	7,5	10	31,5	39,5
SNL 506-605	55	5	7,5	10	36,5	44,5
SE 507-606	59	5	8	11	46,5	54,5
SE 508-607	62	5	8	11	51,5	59,5
SE 509	60	5	9	12	56,5	64,5
SE 510-608	65	5	9	12	62	70,5
SE 511-609	70	5	9	12	67	75,5
SE 512-610	80	5	9	12	72	80,5
SE 513-611	83	5	9	13	77	85,5
SE 515-612	88	5	9	13	87	95,5
SNL 516-613	93	5	9	13	92,5	101
SNL 517	98	5	9	13	97,5	106
SNL 518-615	113	5	9	13	102,5	111
SNL 519-616	116	6	10	14	131	141
SNL 520-617	131	6	10	14	137,5	147,5
SNL 522-619	143	6	10	14	147,5	157,5
SNL 524-620	151	6	11	15	157,5	167,5
SNL 526	156	6	11	15	167,5	177,5
SNL 528	171	6	11	15	177,5	187,5
SNL 530	189	6	11	15	192,5	202,5
SNL 532	201	6	11	15	202,5	212,5

Table 6

Permissible length of a shaft end

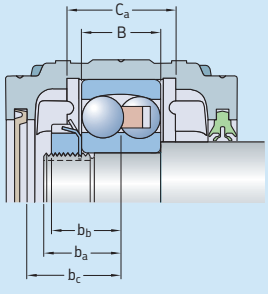

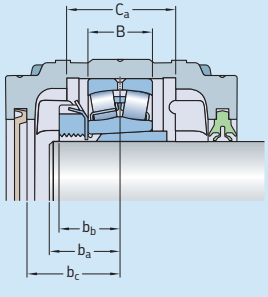

Housing Size	Dimensions			Widest bearing that fits the housing Designation	Dimensions	
	b_a[1]	b_c	C_a		B	b_b
–	mm			–	mm	
SNL 205	18	24	25	**22205 E**	18	17
SNL 206-305	20	29	32	**2305 E**	24	19
SE 207	23	32	34	**22207 E**	23	20,5
SE 208-307	26 (22)	33	39	**2307 E**	31	24,5
SE 209	25	32	30	**22209 E**	23	22,5
SE 210	28 (24)	35	41	**22210 E**	23	23,5
SE 211	30 (25)	37	44	**22211 E**	25	25
SE 212	33 (26)	42	48	**22212 E**	28	27
SE 213	35 (30)	45	51	**22213 E**	31	29,5
SE 215	37 (30)	47	56	**22215 E**	31	30,5
SNL 216	39 (33)	50	58	**22216 E**	33	33,5
SNL 217	40 (35)	52	61	**22217 E**	36	36
SNL 218	45 (35)	60	65	**23218 CC/W33**	52,4	44,2
SNL 505	18	24	25	**22205 EK**	18	17
SNL 506-605	20	29	32	**2305 EK**	24	19
SE 507-606	23	32	34	**2306 EK**	27	21,5
SE 508-607	26 (22)	33	39	**2307 EK**	31	24,5
SE 509	25	32	30	**22209 EK**	23	22,5
SE 510-608	28 (24)	35	41	**22308 EK**	33	26,5
SE 511-609	30 (25)	37	44	**22309 EK**	36	29
SE 512-610	33 (26)	42	48	**22310 EK**	40	32
SE 513-611	35 (30)	45	51	**22311 EK**	43	33,5
SE 515-612	37 (30)	47	56	**22312 EK**	46	36
SNL 516-613	39 (33)	50	58	**22313 EK**	48	38
SNL 517	40 (35)	52	61	**22217 EK**	36	36
SNL 518-615	45 (35)	60	65	**22315 EK**	55	42,5
SNL 519-616	47 (40)	61	68	**22316 EK**	58	46
SNL 520-617	51 (45)	69	70	**23220 CCK/W33**	60,3	50,2
SNL 522-619	61	75	80	**23222 CCK/W33**	69,8	55,9
SNL 524-620	65	79	86	**23224 CCK/W33**	76	60
SNL 526	65	81	90	**23226 CCK/W33**	80	63
SNL 528	70	89	98	**23228 CCK/W33**	88	68
SNL 530	80	98	106	**23230 CCK/W33**	96	74
SNL 532	85	104	114	**23232 CCK/W33**	104	80

[1] The dimension b_a is measured from the centre of the housing seat. There are two special cases:
1 For self-aligning ball bearings in the 12 series, values in brackets are suitable.
2 For non-locating bearing arrangements, and in particular for the widest bearings, the values for b_a must be adjusted if the bearing is not centered in the housing seat.

Special seals

In addition to the standard seal assortment, SNL housings are available, on request, with high-temperature seals, taconite heavy-duty seals with an axial labyrinth, or custom seals for special applications.

High-temperature seals

For high operating temperatures, up to 250 °C *(480 °F)*, high-temperature felt seals or strips should be used. The felt seals can accommodate circumferential speeds up to 2 m/s. They are identified by the designation suffix CB, e.g. TSN 516 CB. For additional information about the felt strips, contact the SKF application engineering service.

Taconite heavy-duty seals with an axial labyrinth

Taconite heavy-duty seals with an axial labyrinth (TSN .. NC or TSN .. NB, → **fig. 9**) can be used under the same conditions as taconite seals with a radial labyrinth. The seals are greased via a hole in the housing cap. Therefore, they can only be used with housings with the suffix T (at the end of a shaft) or the suffix TD (for through shafts).

TSN .. NB seals have a V-ring. It limits the axial movement of the shaft relative to the housing to ±1 mm for shaft diameters up to 65 mm and to approximately ±1,2 mm for sizes up to 100 mm and ±1,5 mm for larger shaft diameters.

Specifications for the seals are listed in **table 7**.

Fig. 9

Taconite heavy-duty seals

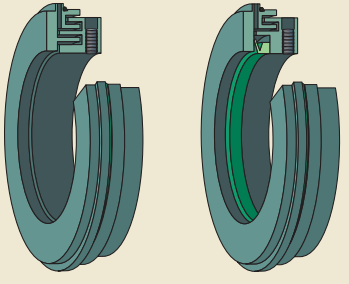

TSN.. NC TSN.. NB

Table 7

Taconite heavy-duty seals with an axial labyrinth

Seal		
Designation	TSN .. NC	TSN .. NB
Size range	515 to 532 612 to 620	515 to 532 612 to 620
Application conditions and requirements		
Temperature [°C]	–40 to +250	–40 to +100
Temperature [°F]	–40 to +480	–40 to +210
Max. circumferential speed [m/s][1)]	not limited	12
Max. misalignment [°]	0,5	0,5
Max. axial shaft displacement from a central position [mm]	±2,5	±1 to 1,5
Shaft tolerance class	h9Ⓔ	h9Ⓔ

1) To convert circumferential speeds to rotational speeds, refer to **table 7** on **page 37**.

Custom seals

SNL housings can be equipped with any type of seal that fits the seal groove dimensions in the housing. The relevant dimensions are provided in **table 5** on **page 68**.

If custom seals are to be used, SKF recommends ordering housings in the SNL 2 series rather than those in the 5 or 6 series. Housings in the SNL 2 series have a larger bore at the shaft entrance and can accommodate a wider choice of seal designs.

Design considerations

For general information about system design, refer to the following sections:

- *Typical shaft-bearing combinations* (→ **page 41**)
- *Locating/non-locating bearing arrangements* (→ **page 40**)
- *Load carrying capacity* (→ **page 44**)
- *Axial load carrying capacity for bearings on sleeves* (→ **page 44**)
- *Specifications for shafts and housing support surfaces* (→ **page 45**)

For additional information about rolling bearings and adapter sleeves, refer to the product information available online at skf.com/bearings.

Typical shaft-bearing combinations

SNL plummer block housings in the 2, 3, 5 and 6 series can accommodate different shaft-bearing combinations (→ **fig. 10**):

- plain shaft with bearing on an adapter sleeve
- stepped shaft with bearing on a cylindrical seat
- stepped shaft with bearing on an adapter sleeve
- stepped shaft with bearing on a withdrawal sleeve

Plain shaft with bearing on an adapter sleeve

This arrangement is standard for housings in the SNL 5 and 6 series. Housings, appropriate parts and dimensions are listed in **product tables 2.1** (→ **page 86**) and **2.2** (→ **page 100**).

Stepped shaft with bearing on a cylindrical seat

This arrangement is standard for housings in the SNL 2 and 3 series, but can also be used for several housings in the SNL 5 and 6 series. Housings, appropriate parts and dimensions are listed in the **product table 2.3**, starting on **page 120**.

The bearing is located axially between a shaft shoulder and a spacer sleeve which is held in place by another component on the shaft. The outside diameter of the spacer sleeve must match the bore diameter of the seal. The spacer sleeve is not supplied with by SKF.

Stepped shaft with bearing on an adapter sleeve

When using an SNL plummer block housing for this arrangement, the dimensions of the abutment ring and the spacer sleeve must fit the housing. Abutment rings and spacer sleeves are not supplied by SKF.

Stepped shaft with bearing on a withdrawal sleeve

When using an SNL housing for this arrangement, the withdrawal sleeve must be located axially on the shaft. This can be done using a spacer sleeve that is held in place by another component. Using a lock nut can be difficult because of the limited space in the housing. The outside diameter of the spacer sleeve must be the same as the shaft abutment diameter d_b, (→ **product tables**) and it should be in accordance with the h9 Ⓔ tolerance class to fit the seal. The spacer sleeve is not supplied by SKF.

Locating and non-locating bearing positions

SNL housings can be used for both the locating and non-locating bearing positions.

The housings are machined standard for bearings in the non-locating position. Bearings in the locating position as well as CARB toroidal roller bearings must be secured in the housing on both sides with locating rings. Appropriate locating rings are listed in the product tables.

Load carrying capacity

SNL housings are intended for loads acting perpendicularly toward the support surface. If the housing is supported over its entire base and the loads are purely perpendicular, loads are limited only by the bearing. If loads acting in other directions occur, or if the housing is not supported over its entire base, be sure that the magnitude of the load is permissible for the housing, the cap bolts and the attachment bolts. When housings are subjected to cyclic loads or dynamic imbalance, contact the SKF application engineering service.

Fig. 10

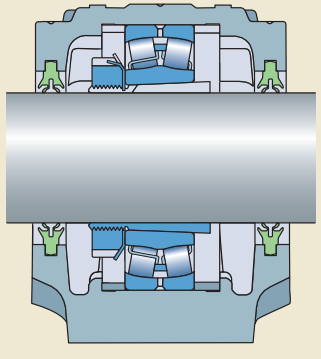

Plain shaft with bearing on an adapter sleeve

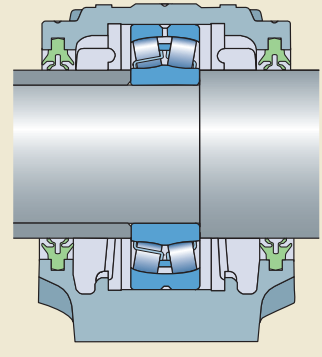

Stepped shaft with bearing on a cylindrical seat

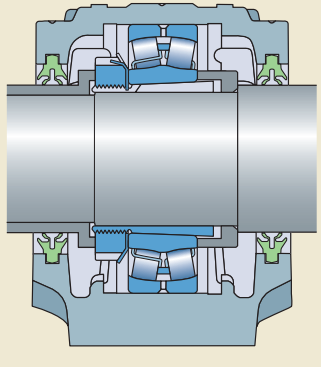

Stepped shaft with bearing on an adapter sleeve

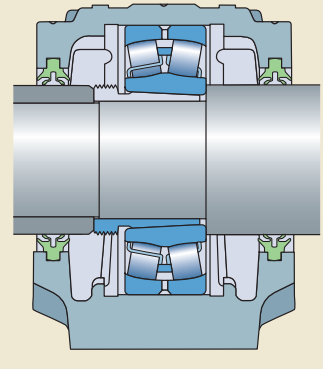

Stepped shaft with bearing on a withdrawal sleeve

Breaking loads and safety factors

Guideline values for the breaking loads of housings made of grey cast iron are listed in **table 8**. To obtain the permissible load for a housing, the appropriate breaking load value should be divided by a factor based on the safety requirements. In general engineering, a safety factor of 6 is typical (→ *Load carrying capacity*, **page 44**). The permissible load can only be exploited if the cap bolts are tightened according to the torque values listed in **table 10** on **page 77**.

The limits for $P_{0°}$ apply only when the housing is not supported over its entire base.

The load P_a is the axial breaking load of the housing. If the incorporated bearing is mounted on a sleeve, check the permissible axial load for the sleeve.

For housings made of spheroidal graphite cast iron, the values obtained from **tables 8** and **9** on **pages 75** and **76** respectively should be multiplied by a factor of 1,8.

Safe loads

In some countries, safe loads are used instead of breaking loads. Approximate safe loads are listed in **table 9** on **page 76**. These guideline values have been established using accepted engineering practices, taking safety, ultimate tensile strength of the materials and working stresses into account. They reflect a safety factor of 5 against fracture, and a minimum factor of 2 against cap bolt yield.

Additional housing support

When the housing is subjected to loads acting parallel to the support surface, it may be necessary to pin the housing to the support surface or to provide a stop to counter the load.

When loads act at angles between 55° and 120°, or when the axial loads are greater than 5% of $P_{180°}$ (→ **table 8**), the housing should be pinned to the support surface or a stop should be provided to counter the load. The dowel pins or stop should be sufficiently strong to accommodate the loads acting parallel to the support surface.

Recommendations for the position and size of the holes to accommodate dowel pins are provided in **table 13** on **page 82**. For FSNL housings, refer to **table 1** on **page 62.**

Load carrying capacity of the cap bolts

Approximate values for the yield points for cap bolts are provided in **table 10** on **page 77**. The values in **table 10** apply to 8.8 class cap bolts, which are supplied with SNL housings made of grey cast iron. SSNLD housings made of spheroidal graphite cast iron are supplied with 10.9 class cap bolts. For these cap bolts, the values obtained from **table 10** should be multiplied by a factor of 1,4.

If a safety factor of 6 is used for the permissible load of grey cast iron SNL housings, the cap bolts do not need to be considered. In this case, the permissible load of the housing is less than the permissible load for the cap bolts.

Operating temperature

The permissible operating temperature is mainly limited by the seals (→ **table 3**, **page 65**) and the lubricant in the bearing. For temperature limits of SKF bearings and lubricants, refer to the product information available online at skf.com/bearings.

The housing material does not have any additional temperature limits, except for very low temperature applications where impact strength could be a factor.

The housing paint is heat resistant up to 80 °C *(175 °F)* material temperature or 100 °C *(210 °F)* ambient temperature. When temperatures outside the permissible range are expected, contact the SKF application engineering service.

Operating speed

All seals, except non-contact labyrinth seals, limit the permissible operating speed. Speed limits for seals are provided in **table 3** on **page 65** and in **table 7** on **page 70**. For speed limits of the bearing, refer to the product information available online at skf.com/bearings.

Table 8

Breaking loads for SNL plummer block housings

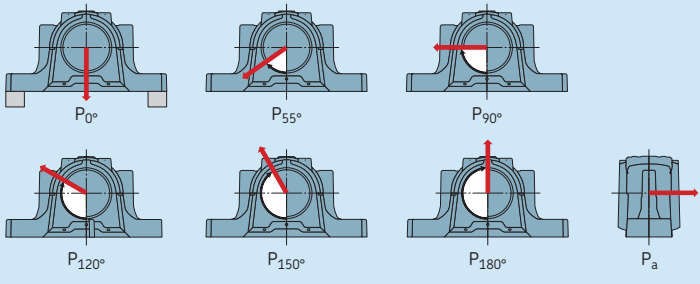

Housing Size		Breaking loads $P_{0°}$	$P_{55°}$	$P_{90°}$	$P_{120°}$	$P_{150°}$	$P_{180°}$	P_a
–		kN						
SNL 205	**SNL 505**	100	155	95	70	60	80	52
SNL 206-305	**SNL 506-605**	130	170	100	80	65	85	55
SE 207	**SE 507-606**	140	190	115	85	80	95	60
SE 208-307	**SE 508-607**	150	215	130	95	85	110	70
SE 209	**SE 509**	160	230	140	100	90	115	75
SE 210	**SE 510-608**	170	265	155	120	110	130	85
(F)SE 211	**(F)SE 511-609**	190	275	170	125	115	140	90
(F)SE 212	**(F)SE 512-610**	210	300	180	130	120	150	100
(F)SE 213	**(F)SE 513-611**	270	340	205	150	130	170	110
(F)SE 215	**(F)SE 515-612**	290	410	250	185	160	205	135
(F)SNL 216	**(F)SNL 516-613**	350	430	260	190	175	215	140
(F)SNL 217	**(F)SNL 517**	370	480	290	205	190	240	155
(F)SNL 218	**(F)SNL 518-615**	430	550	340	250	215	275	180
	(F)SNL 519-616	450	580	350	260	230	290	190
	(F)SNL 520-617	470	620	370	280	250	310	200
	(F)SNL 522-619	600	680	410	310	275	340	220
	(F)SNL 524-620	800	790	470	350	320	400	260
	(F)SNL 526	900	900	540	410	360	450	295
	(F)SNL 528	1 000	1 050	630	470	430	530	345
	(F)SNL 530	1 100	1 200	730	540	480	600	390
	(F)SNL 532	1 300	1 450	860	640	570	720	470

Table 9

Safe loads for SNL plummer block housings

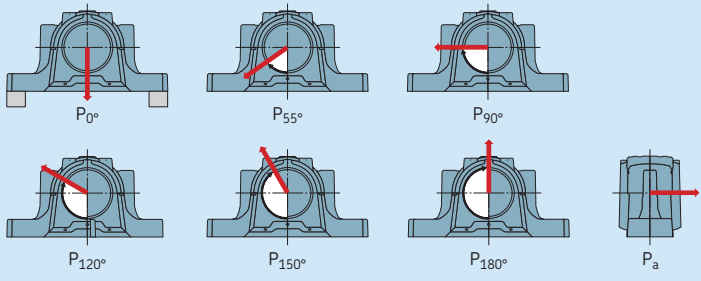

Housing		Safe loads for different load directions[1]						
Size		$P_{0°}$	$P_{55°}$	$P_{90°}$	$P_{120°}$	$P_{150°}$	$P_{180°}$	P_a
–		kN/*lbf.*						
SNL 205	**SNL 505**	20	31	19	14	12	16	10,4
		4 500	*6 975*	*4 275*	*3 150*	*2 700*	*3 600*	*2 340*
SNL 206-305	**SNL 506-605**	26	34	20	16	13	17	11
		5 850	*7 650*	*4 500*	*3 600*	*2 925*	*3 825*	*2 475*
SE 207	**SE 507-606**	28	38	23	17	16	19	12
		6 300	*8 550*	*5 175*	*3 825*	*3 600*	*4 275*	*2 700*
SE 208-307	**SE 508-607**	30	43	26	19	17	22	14
		6 750	*9 675*	*5 850*	*4 275*	*3 825*	*4 950*	*3 150*
SE 209	**SE 509**	32	46	28	20	18	23	15
		7 200	*10 350*	*6 300*	*4 500*	*4 050*	*5 175*	*3 375*
SE 210	**SE 510-608**	34	53	31	24	22	26	17
		7 650	*11 925*	*6 975*	*5 400*	*4 950*	*5 850*	*3 825*
(F)SE 211	**(F)SE 511-609**	38	55	34	25	23	28	18
		8 550	*12 375*	*7 650*	*5 625*	*5 175*	*6 300*	*4 050*
(F)SE 212	**(F)SE 512-610**	42	60	36	26	24	30	20
		9 450	*13 500*	*8 100*	*5 850*	*5 400*	*6 750*	*4 500*
(F)SE 213	**(F)SE 513-611**	54	68	41	30	26	34	22
		12 150	*15 300*	*9 225*	*6 750*	*5 850*	*7 650*	*4 950*
(F)SE 215	**(F)SE 515-612**	58	82	50	37	32	41	27
		13 050	*18 450*	*11 250*	*8 325*	*7 200*	*9 225*	*6 075*
(F)SNL 216	**(F)SNL 516-613**	70	86	52	38	35	43	28
		15 750	*19 350*	*11 700*	*8 550*	*7 875*	*9 675*	*6 300*
(F)SNL 217	**(F)SNL 517**	74	96	58	41	38	48	31
		16 650	*21 600*	*13 050*	*9 225*	*8 550*	*10 800*	*6 975*
(F)SNL 219	**(F)SNL 518-615**	86	110	68	50	43	55	36
		19 350	*24 750*	*15 300*	*11 250*	*9 675*	*12 375*	*8 100*
	(F)SNL 519-616	90	116	70	52	46	58	38
		20 250	*26 100*	*15 750*	*11 700*	*10 350*	*13 050*	*8 550*
	(F)SNL 520-617	94	124	74	56	50	62	40
		21 150	*27 900*	*16 650*	*12 600*	*11 250*	*13 950*	*9 000*
	(F)SNL 522-619	120	136	82	62	55	68	44
		27 000	*30 600*	*18 450*	*13 950*	*12 375*	*15 300*	*9 900*
	(F)SNL 524-620	160	158	94	70	64	80	52
		36 000	*35 550*	*21 150*	*15 750*	*14 400*	*18 000*	*11 700*
	(F)SNL 526	180	180	108	82	72	90	59
		40 500	*40 500*	*24 300*	*18 450*	*16 200*	*20 250*	*13 275*
	(F)SNL 528	200	210	126	94	86	106	69
		45 000	*47 250*	*28 350*	*21 150*	*19 350*	*23 850*	*15 525*
	(F)SNL 530	220	240	146	108	96	120	78
		49 500	*54 000*	*32 850*	*24 300*	*21 600*	*27 000*	*17 550*
	(F)SNL 532	260	290	172	128	114	144	94
		58 500	*65 250*	*38 700*	*28 800*	*25 650*	*32 400*	*21 150*

[1] The values are based on a safety factor of 5.

Attachment bolt recommendations

In typical applications, 8.8 class hexagon head bolts in accordance with ISO 4014 can be used together with washers. If the load does not act perpendicularly toward the base, it may be necessary to use stronger 10.9 class bolts.

SKF housings can withstand loads resulting from tightening the attachment bolts to the torque values recommended by bolt manufacturers (→ **table 10**). They are valid for oiled, but otherwise untreated, thread surfaces. SKF cannot guarantee that tightening to the recommended value will provide sufficient anchoring. Make sure that attachment bolts, dowels or stops, and a sufficiently strong support can accommodate all occurring loads.

Table 10

Load carrying capacity and torque values for cap bolts and attachment bolts

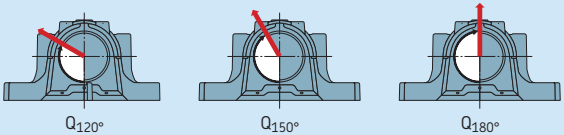

Housing Size		Cap bolts Yield point for two bolts $Q_{120°}$	$Q_{150°}$	$Q_{180°}$	Size	Tightening torque	Attachment bolts[1] Size	Tightening torque[2]
–		kN			–	Nm	–	Nm
SNL 205	**SNL 505**	150	85	75	M 10×40	50	M 12	80
SNL 206-305	**SNL 506-605**	150	85	75	M 10×40	50	M 12	80
SE 207	**SNL 507-606**	150	85	75	M 10×50	50	M 12	80
SE 208-307	**SNL 508-607**	150	85	75	M 10×50	50	M 12	80
SE 209	**SNL 509**	150	85	75	M 10×50	50	M 12	80
SE 210	**SNL 510-608**	150	85	75	M 10×55	50	M 12	80
SE 211	**SE 511-609**	220	125	110	M 12×60	80	M 16	200
SE 212	**SE 512-610**	220	125	110	M 12×60	80	M 16	200
SE 213	**SE 513-611**	220	125	110	M 12×65	80	M 16	200
SE 215	**SE 515-612**	220	125	110	M 12×65	80	M 16	200
SNL 216	**SNL 516-613**	220	125	110	M 12×70	80	M 20	385
SNL 217	**SNL 517**	220	125	110	M 12×80	80	M 20	385
SNL 218	**SNL 518-615**	400	230	200	M 16×90	150	M 20	385
	SNL 519-616	400	230	200	M 16×90	150	M 20	385
	SNL 520-617	620	360	310	M 20×100	200	M 24	665
	SNL 522-619	620	360	310	M 20×100	200	M 24	665
	SNL 524-620	620	360	310	M 20×110	200	M 24	665
	SNL 526	900	520	450	M 24×130	350	M 24	665
	SNL 528	900	520	450	M 24×130	350	M 30	1 310
	SNL 530	900	520	450	M 24×130	350	M 30	1 310
	SNL 532	900	520	450	M 24×130	350	M 30	1 310

[1] Valid for SE and SNL housings only. For information about attachment bolts for FSE and FSNL housings, refer to **table 1** on **page 62**.
[2] Recommended by bolt manufacturers.

Lubrication

SNL plummer (pillow) block housings in the 2, 3, 5 and 6 series with standard seals are intended for grease lubrication. For oil lubrication, housings with oil seals (→ **page 64**) or SONL plummer block housings (→ **page 349**) should be used.

The lubricant should be selected based on the operating conditions of the bearing. For additional information about lubricant selection, refer to the product information available online at skf.com.

Initial grease fill

If no other requirements exist, the free space in the bearing should be completely filled with grease and the free space in the housing should be filled to 20 to 40% of its volume. A 40% grease fill is required when bearings have to be relubricated from the side, while a 20% grease fill is used when bearings are relubricated via the outer ring.

For highly contaminated environments and slow speeds, fill the housing to 70–80%. For best protection against contaminants, use the SKF three-barrier solution (→ **page 39**). For additional information, contact the SKF application engineering service.

Quantities for 20 and 40% grease fills are listed **table 11**. The values are valid for a typical lithium grease (about 0,95 g/cm³). They include grease for the bearing and the four-lip seals or the sealing washers of V-ring seals. The grease to fill labyrinth seals or taconite heavy-duty seals is not included. For sealed bearings, the values have to be adjusted.

In most applications, the initial grease fill will adequately lubricate the bearing until the grease is exchanged during the next planned maintenance interval.

Table 11

Initial grease fill

Housing		Initial fill	
Size		20%	40%
–		g	
SNL 205	**SNL 505**	15	25
SNL 206-305	**SNL 506-605**	25	40
SE 207	**SE 507-606**	30	50
SE 208-307	**SE 508-607**	35	55
SE 209	**SE 509**	40	60
SE 210	**SE 510-608**	45	70
(F)SE 211	**(F)SE 511-609**	55	90
(F)SE 212	**(F)SE 512-610**	80	135
(F)SE 213	**(F)SE 513-611**	100	160
(F)SE 215	**(F)SE 515-612**	125	210
(F)SNL 216	**(F)SNL 516-613**	170	280
(F)SNL 217	**(F)SNL 517**	200	330
(F)SNL 218	**(F)SNL 518-615**	260	430
	(F)SNL 519-616	300	480
	(F)SNL 520-617	390	630
	(F)SNL 522-619	530	850
	(F)SNL 524-620	630	1 000
	(F)SNL 526	700	1 100
	(F)SNL 528	900	1 400
	(F)SNL 530	1 100	1 700
	(F)SNL 532	1 300	2 000

Relubrication

SNL plummer block housings enable relubrication of the incorporated bearings and seals (→ **fig. 11**):

- SNL housings have two holes that have been drilled and tapped for an AH 1/8-27 PTF grease fitting. On a new housing, the holes are covered by plastic plugs. These plugs should be replaced with the grease fitting and threaded plug supplied with the housing.
- If a larger grease fitting or other equipment has to be used, an adapter to change to a G 1/4 thread is available (→ **page 47**).
- Dimples cast into the top of the housing cap indicate alternative positions where holes can be drilled and tapped to accommodate a grease fitting for bearing or seal relubrication.

Fig. 11

Relubrication possibilities

SNL housing up to size 218 or 522

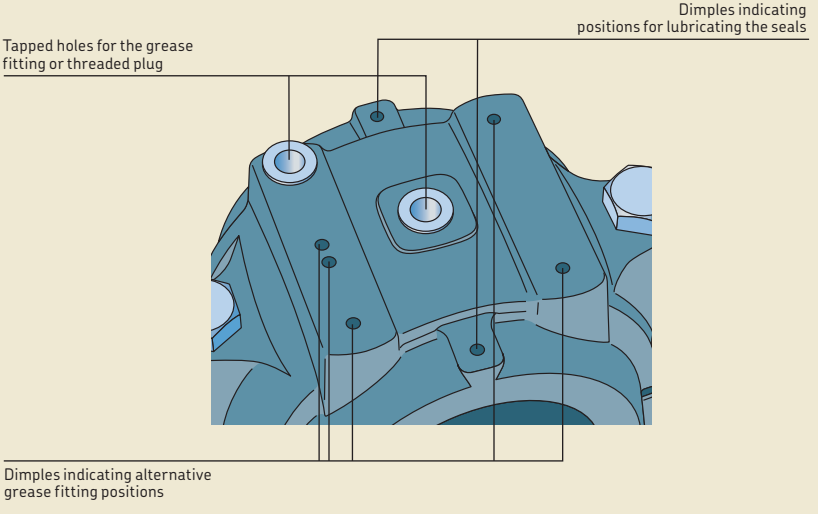

SNL housing from size 524 and above

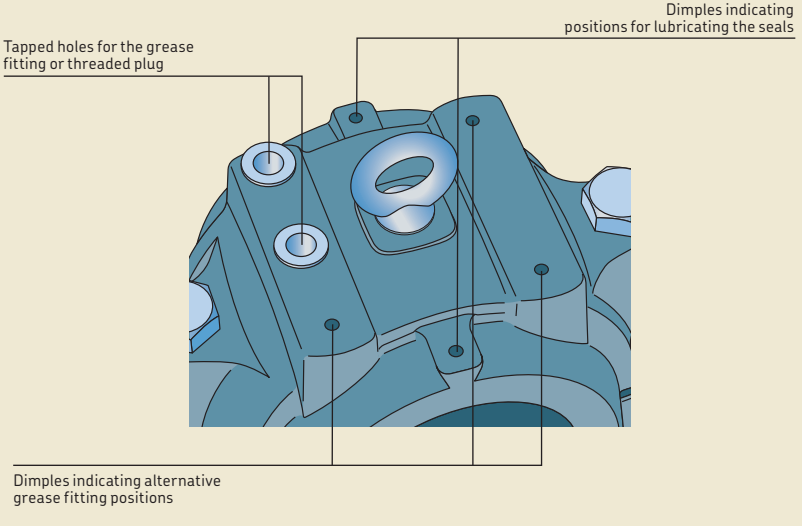

Relubrication via the outer ring

The hole in the centre of the cap should be used to relubricate spherical roller bearings with a relubrication feature (a lubrication groove and holes in the outer ring) (→ **fig. 12**). When applying grease via the relubrication feature, the shaft should be rotating. Narrow bearings (dimension series 13 and 22) in the locating position can be displaced axially, so that the relubrication groove in the bearing does not line up with the relubrication hole in the housing cap. Make sure the bearing is sufficiently centred when relubricating.

Relubrication from the side

When relubricating from the side, which is typically necessary for self-aligning ball bearings and CARB toroidal roller bearings, the offset hole in the housing should be used. An integrated flange in the housing guides grease from the grease fitting directly to the rolling elements (→ **fig. 13**). This grease guiding system is available on housings from sizes 216 and 516-613 upwards.

When bearings mounted on an adapter sleeve have to be relubricated from the side, the grease should be introduced from the side opposite the lock nut.

When bearings mounted at the end of a shaft have to be relubricated from the side, the grease should be applied at the point closest to the end cover.

Relubrication from the side for housings with V-ring seals

When relubricating bearings from the side in housings with V-ring seals, mount an additional V-ring inside the housing on the side where grease is applied (→ **fig. 14**). This forces the grease to travel through the bearing and exit the housing on the opposite side.

SKF can supply an appropriate V-ring together with a splash plate that fits in the seal groove to cover a bit more than the top half of the housing. These sets are identified by the series designation ASNA followed by the housing size identification and the suffix V, e.g. ASNA 516 V.

Grease escape hole

When four-lip seals (TSN .. L) or felt seals (TSN .. C or FS 170) are used, grease cannot escape via the seals. If relubrication is required, the housing should have a grease escape hole.

SNL housings can be supplied with a grease escape hole (suffix V). A grease escape hole can be drilled into the housing using the dimensions provided in **table 12**.

Fig. 12

Relubrication via the outer ring

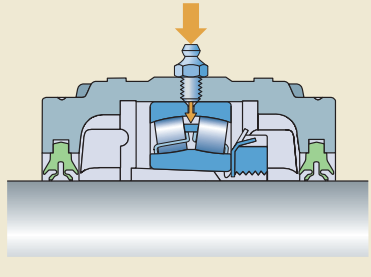

Fig. 13

Relubrication from the side

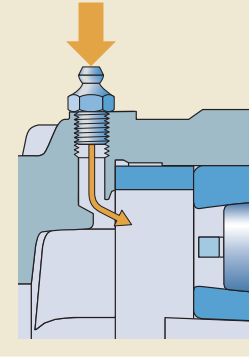

Table 12

Recommended dimensions for grease escape holes

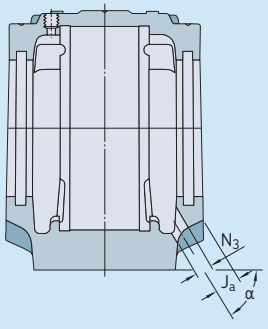

Housing Size		Dimensions J_a	N_3	α
–		mm		°
SNL 205	SNL 505	8,5	10	45
SNL 206-305	SNL 506-605	10	10	45
SE 207	SNL 507-606	10	10	45
SE 208-307	SE 508-607	9	10	45
SE 209	SE 509	10	10	45
SE 210	SE 510-608	11	10	45
(F)SE 211	(F)SE 511-609	10	12	45
(F)SE 212	(F)SE 512-610	9	12	45
(F)SE 213	(F)SE 513-611	13	12	45
(F)SE 215	(F)SE 515-612	12,5	12	45
(F)SNL 216	(F)SNL 516-613	14	16	45
(F)SNL 217	(F)SNL 517	17	16	45
(F)SNL 218	(F)SNL 518-615	20	16	40
	(F)SNL 519-616	20	16	50
	(F)SNL 520-617	21	16	50
	(F)SNL 522-619	21	20	50
	(F)SNL 524-620	24	20	55
	(F)SNL 526	22	20	55
	(F)SNL 528	23	20	50
	(F)SNL 530	25	20	55
	(F)SNL 532	25	20	60

Fig. 14

V-ring seal and splash plate set mounted in an SNL housing

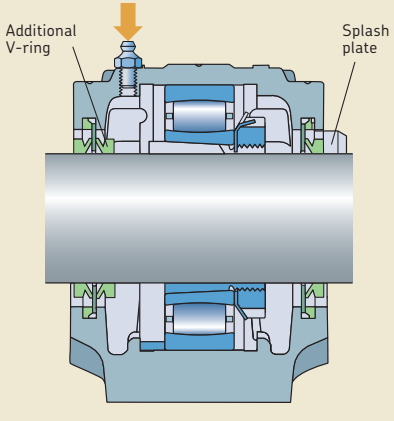

Mounting

SNL plummer (pillow) block housings must be mounted properly using the appropriate tools and state of the art mechanical mounting methods. All the associated components must also meet certain basic requirements (→ *Specifications for shafts and housing support surfaces* on **page 45**).

Mounting instructions for each housing are provided with the seal pack. For information about mounting rolling bearings, refer to the *SKF bearing maintenance handbook* or skf.com/mount.

Torque specifications

Cap bolts should be tightened to the torque values listed in **table 10** on **page 77**. For information about attachment bolts, refer to *Attachment bolt recommendations* on **page 77**.

Pinning or supporting the housing

Some load conditions may require the housing to be pinned to its support surface or a stop to accommodate loads acting parallel to the housing support surface (→ *Additional housing support*, **page 74**).

Recommendations for the position and size of the holes to accommodate dowel pins are provided in **table 13**. For FSNL housings, refer to **table 1** on **page 62**. Dimples cast into the housing base mark the recommended positions.

Table 13

Position and size of dowel pin holes

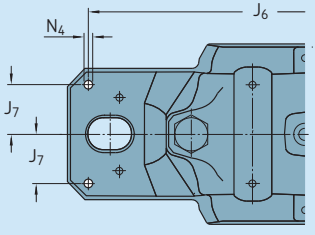

Housing Size		Dimensions J_6	J_7	N_4
–		mm		
SNL 205	**SNL 505**	152	16	5
SNL 206-305	**SNL 506-605**	172	19	5
SE 207	**SE 507-606**	172	19	5
SE 208-307	**SE 508-607**	188	22	6
SE 209	**SE 509**	188	22	6
SE 210	**SE 510-608**	188	22	6
SE 211	**SE 511-609**	234	24,5	8
SE 212	**SE 512-610**	234	27	8
SE 213	**SE 513-611**	252	29	8
SE 215	**SE 515-612**	257	29	8
SNL 216	**SNL 516-613**	288	33	8
SNL 217	**SNL 517**	292	33	8
SNL 218	**SNL 518-615**	317	35	8
	SNL 519-616	317	35	8
	SNL 520-617	348	39	8
	SNL 522-619	378	44	8
	SNL 524-620	378	44	8
	SNL 526	414	46	12
	SNL 528	458	54	12
	SNL 530	486	58	12
	SNL 532	506	58	12

Condition monitoring

SNL housings have appropriate positions for condition monitoring sensors (→ **fig. 15**).

Position 1 is a measurement point perpendicular to the shaft, and should be used when the housing is hung from its support or when loads act away from the support surface.

Position 2 is a measurement point parallel to the shaft and should be used when the loads act toward the support surface.

Both positions 1 and 2 are in accordance with ISO 10816-1.

Position 3 is a measurement point that is approximately 20° to 45° to the shaft axis.

Fig. 15

Measurement points for condition monitoring



Accessories

The following accessories are available for SNL housings in the 2, 3, 5 and 6 series:

- Adapter for G 1/4 connections
- V-ring and splash plate sets (→ **page 80**)
- Automatic lubricators: SKF SYSTEM 24 and SKF MultiPoint
- Grease meter: LAGM 1000E
- Condition monitoring sensors

For additional information, refer to *SKF tools and products* (→ **page 47**).

Ordering information

For SNL housings in the 2, 3, 5 and 6 series, each of the following items must be ordered separately:

- housing
- seals
- end cover
- locating rings
- bearing
- adapter sleeve

Order example

Two plummer block housings with four-lip seals are required for two 22218 EK spherical roller bearings on H 318 adapter sleeves. One housing will accommodate the non-locating bearing at the end of the shaft. The other housing will accommodate the locating bearing and a through shaft.

The following items should be ordered (in addition to the bearings and adapter sleeves):

- 2 housings SNL 518-615
- 2 four-lip seal packs TSN 518 L (each pack contains two seals)
- 1 end cover ASNH 518-615
- 2 locating rings FRB 12.5/160

2.1 SNL and SE plummer block housings for bearings on an adapter sleeve, metric shafts
d_a 20 – 30 mm

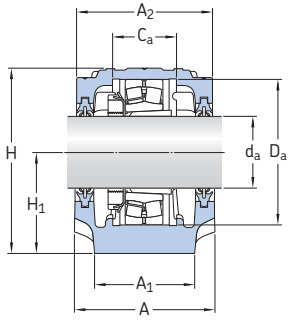

with TSN .. L

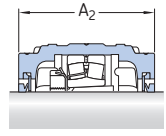

with TSN .. A

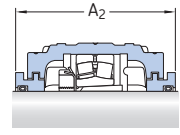

with TSN .. S

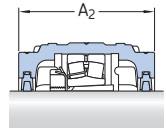

with TSN .. C

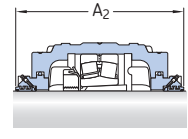

with TSN .. ND

Shaft diameter d_a	Housing	Appropriate parts Bearing[1]	Adapter sleeve[2]	Locating ring[3]	Seals	End cover	Width incl. seals A_2
mm	–	–					mm
20	**SNL 505**	1205 EKTN9	H 205	FRB 5/52	TSN 505 A	ASNH 505	67
		2205 EKTN9	H 305	FRB 3.5/52	TSN 505 C		67
		22205 EK	H 305	FRB 3.5/52	TSN 505 S		80
		C 2205 KTN9	H 305 E	FRB 3.5/52	TSN 505 ND		125
	SNL 506-605	1305 EKTN9	H 305	FRB 7.5/62	TSN 605 A	ASNH 506-605	77
					TSN 605 C		77
					TSN 605 S		89
					TSN 605 ND		135
25	**SNL 506-605**	1206 EKTN9	H 206	FRB 8/62	TSN 506 A	ASNH 506-605	77
		2206 EKTN9	H 306	FRB 6/62	TSN 506 C		77
		22206 EK	H 306	FRB 6/62	TSN 506 S		89
		C 2206 KTN9	H 306 E	FRB 6/62	TSN 506 ND		135
	SE 507-606	1306 EKTN9	H 306	FRB 7.5/72	TSN 606 A	ASNH 507-606	82
		2306 K	H 2306	FRB 3.5/72	TSN 606 C		82
		21306 CCK	H 306	FRB 7.5/72	TSN 606 S		94
					TSN 606 ND		140
30	**SE 507-606**	1207 EKTN9	H 207	FRB 8.5/72	TSN 507 L	ASNH 507-606	82
		2207 EKTN9	H 307	FRB 5.5/72	TSN 507 A		82
		22207 EK	H 307	FRB 5.5/72	TSN 507 C		82
		C 2207 KTN9	H 307 E	FRB 5.5/72	TSN 507 S		94
					TSN 507 ND		145
	SE 508-607	1307 EKTN9	H 307	FRB 9/80	TSN 607 L	ASNH 508-607	85
		2307 EKTN9	H 2307	FRB 4/80	TSN 607 A		85
		21307 CCK	H 307	FRB 9/80	TSN 607 C		85
					TSN 607 S		97
					TSN 607 ND		145

[1] Only the basic bearing designation is listed. Other bearing variants can also fit the housing. 12(00), 22(00), 13(00) – self-aligning ball bearings, 222(00), 213(00), BS2... – spherical roller bearings, C... – CARB toroidal roller bearing
[2] The adapter sleeve fits the bearing in the same line only. Other adapter sleeve variants can also be used.
[3] The locating ring fits the bearing in the same line only. Two locating rings are required for each housing.

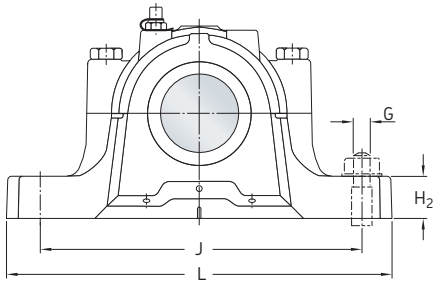

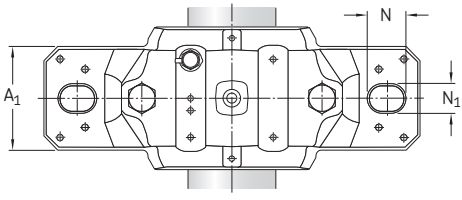

Shaft diameter	Dimensions												Mass Housing
d_a	A	A_1	C_a	D_a	H	H_1	H_2	J	L	N	N_1	G	
mm	mm												kg
20	67	46	25	52	74	40	19	130	165	20	15	12	1,45
	77	52	32	62	89	50	22	150	185	20	15	12	2,00
25	77	52	32	62	89	50	22	150	185	20	15	12	2,00
	83	52	34	72	94	50	22	150	185	20	15	12	2,60
30	83	52	34	72	94	50	22	150	185	20	15	12	2,60
	85	60	39	80	108	60	25	170	205	20	15	12	3,40

2.1 SNL and SE plummer block housings for bearings on an adapter sleeve, metric shafts
d_a 35 – 45 mm

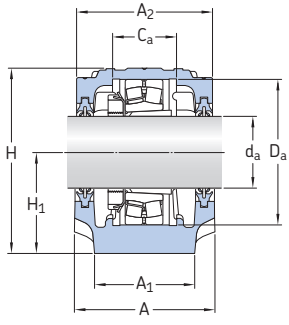

with TSN .. L

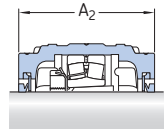

with TSN .. A

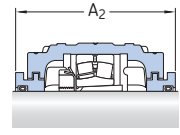

with TSN .. S

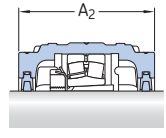

with TSN .. C

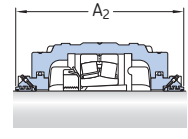

with TSN .. ND

Shaft diameter d_a	Housing	Appropriate parts Bearing[1]	Adapter sleeve[2]	Locating ring[3]	Seals	End cover	Width incl. seals A_2
mm	–	–					mm
35	**SE 508-607**	1208 EKTN9	H 208	FRB 10.5/80	TSN 508 L	ASNH 508-607	85
		2208 EKTN9	H 308	FRB 8/80	TSN 508 A		85
		22208 EK	H 308	FRB 8/80	TSN 508 C		85
		BS2-2208-2CSK	H 2308 E	FRB 5.5/80	TSN 508 S		97
		C 2208 KTN9	H 308 E	FRB 8/80	TSN 508 ND		150
	SE 510-608	1308 EKTN9	H 308	FRB 9/90	TSN 608 L	ASNH 510-608	90
		2308 EKTN9	H 2308	FRB 4/90	TSN 608 A		90
		21308 EK	H 308	FRB 9/90	TSN 608 C		90
		22308 EK	H 2308	FRB 4/90	TSN 608 S		102
					TSN 608 ND		150
40	**SE 509**	1209 EKTN9	H 209	FRB 5.5/85	TSN 509 L	ASNH 509	85
		2209 EKTN9	H 309	FRB 3.5/85	TSN 509 A		85
		22209 EK	H 309	FRB 3.5/85	TSN 509 C		85
		BS2-2209-2CSK	H 309 E	FRB 1/85	TSN 509 S		97
		C 2209 KTN9	H 309 E	FRB 3.5/85	TSN 509 ND		150
	SE 511-609	1309 EKTN9	H 309	FRB 9.5/100	TSN 609 L	ASNH 511-609	95
		2309 EKTN9	H 2309	FRB 4/100	TSN 609 A		95
		21309 EK	H 309	FRB 9.5/100	TSN 609 C		95
		22309 EK	H 2309	FRB 4/100	TSN 609 S		107
					TSN 609 ND		155
45	**SE 510-608**	1210 EKTN9	H 210	FRB 10.5/90	TSN 510 L	ASNH 510-608	90
		2210 EKTN9	H 310	FRB 9/90	TSN 510 A		90
		22210 EK	H 310	FRB 9/90	TSN 510 C		90
		BS2-2210-2CSK	H 310 E	FRB 6.5/90	TSN 510 S		102
		C 2210 KTN9	H 310 E	FRB 9/90	TSN 510 ND		155
	SE 512-610	1310 EKTN9	H 310	FRB 10.5/110	TSN 610 L	ASNH 512-610	105
		2310 K	H 2310	FRB 4/110	TSN 610 A		105
		21310 EK	H 310	FRB 10.5/110	TSN 610 C		105
		22310 EK	H 2310	FRB 4/110	TSN 610 S		117
					TSN 610 ND		165

[1] Only the basic bearing designation is listed. Other bearing variants can also fit the housing. 12(00), 22(00), 13(00) – self-aligning ball bearings, 222(00), 213(00), BS2... – spherical roller bearings, C... – CARB toroidal roller bearing
[2] The adapter sleeve fits the bearing in the same line only. Other adapter sleeve variants can also be used.
[3] The locating ring fits the bearing in the same line only. Two locating rings are required for each housing.

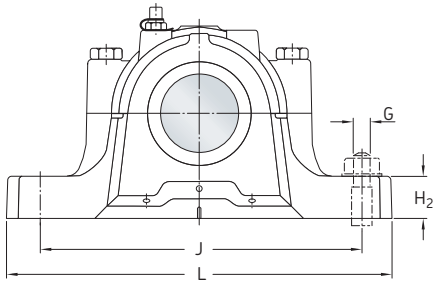

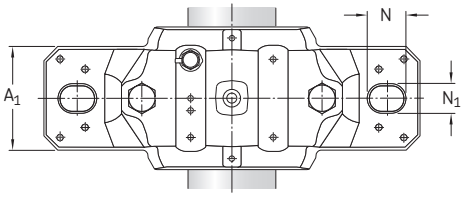

Shaft diameter	Dimensions												Mass Housing
d_a	A	A_1	C_a	D_a	H	H_1	H_2	J	L	N	N_1	G	
mm	mm												kg
35	85	60	39	80	108	60	25	170	205	20	15	12	3,40
	90	60	41	90	114	60	25	170	205	20	15	12	3,85
40	85	60	30	85	109	60	25	170	205	20	15	12	3,40
	95	70	44	100	129	70	28	210	255	24	18	16	5,45
45	90	60	41	90	114	60	25	170	205	20	15	12	3,85
	105	70	48	110	134	70	30	210	255	24	18	16	6,15

2.1 SNL and SE plummer block housings for bearings on an adapter sleeve, metric shafts
d_a 50 – 60 mm

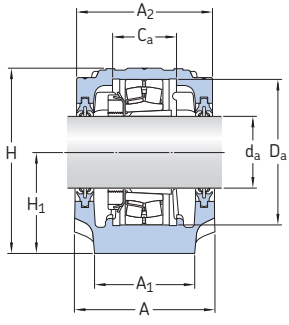

with TSN .. L

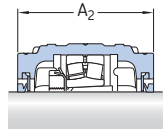

with TSN .. A

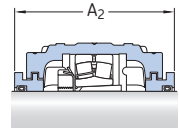

with TSN .. S

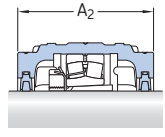

with TSN .. C

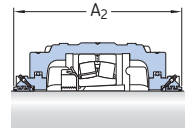

with TSN .. ND

Shaft diameter d_a	Housing	Appropriate parts Bearing[1]	Adapter sleeve[2]	Locating ring[3]	Seals	End cover	Width incl. seals A_2
mm	–	–					mm
50	**SE 511-609**	1211 EKTN9	H 211	FRB 11.5/100	TSN 511 L	ASNH 511-609	95
		2211 EKTN9	H 311	FRB 9.5/100	TSN 511 A		95
		22211 EK	H 311	FRB 9.5/100	TSN 511 C		95
		BS2-2211-2CSK	H 311 E	FRB 6.5/100	TSN 511 S		107
		C 2211 KTN9	H 311 E	FRB 9.5/100	TSN 511 ND		165
	SE 513-611	1311 EKTN9	H 311	FRB 11/120	TSN 611 L	ASNH 513-611	110
		2311 K	H 2311	FRB 4/120	TSN 611 A		110
		21311 EK	H 311	FRB 11/120	TSN 611 C		110
		22311 EK	H 2311	FRB 4/120	TSN 611 S		122
					TSN 611 ND		170
55	**SE 512-610**	1212 EKTN9	H 212	FRB 13/110	TSN 512 L	ASNH 512-610	105
		2212 EKTN9	H 312	FRB 10/110	TSN 512 A		105
		22212 EK	H 312	FRB 10/110	TSN 512 C		105
		BS2-2212-2CSK	H 312 E	FRB 7/110	TSN 512 S		117
		C 2212 KTN9	H 312 E	FRB 10/110	TSN 512 ND		175
	SE 515-612	1312 EKTN9	H 312	FRB 12.5/130	TSN 612 L	ASNH 515-612	115
		2312 K	H 2312	FRB 5/130	TSN 612 A		115
		21312 EK	H 312	FRB 12.5/130	TSN 612 C		115
		22312 EK	H 2312	FRB 5/130	TSN 612 S		127
					TSN 612 ND		175
60	**SE 513-611**	1213 EKTN9	H 213	FRB 14/120	TSN 513 L	ASNH 513-611	110
		2213 EKTN9	H 313	FRB 10/120	TSN 513 A		110
		22213 EK	H 313	FRB 10/120	TSN 513 C		110
		BS2-2213-2CSK	H 2313 E	FRB 6.5/120	TSN 513 S		122
		C 2213 KTN9	H 313 E	FRB 10/120	TSN 513 ND		180
	SNL 516-613	1313 EKTN9	H 313	FRB 12.5/140	TSN 613 L	ASNH 516-613	120
		2313 K	H 2313	FRB 5/140	TSN 613 A		120
		21313 EK	H 313	FRB 12.5/140	TSN 613 C		120
		22313 EK	H 2313	FRB 5/140	TSN 613 S		138
					TSN 613 ND		180

[1] Only the basic bearing designation is listed. Other bearing variants can also fit the housing. 12(00), 22(00), 13(00) – self-aligning ball bearings, 222(00), 213(00), BS2... – spherical roller bearings, C... – CARB toroidal roller bearing
[2] The adapter sleeve fits the bearing in the same line only. Other adapter sleeve variants can also be used.
[3] The locating ring fits the bearing in the same line only. Two locating rings are required for each housing.

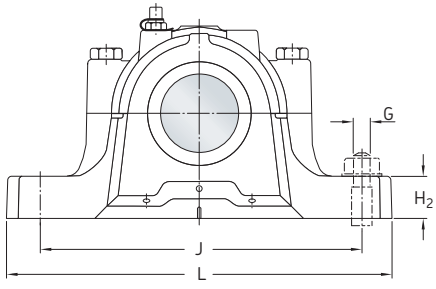

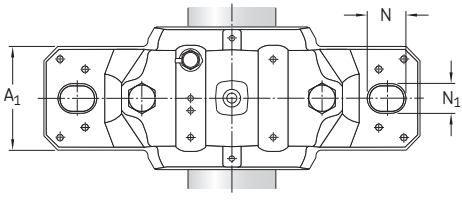

Shaft diameter	Dimensions												Mass Housing
d_a	A	A_1	C_a	D_a	H	H_1	H_2	J	L	N	N_1	G	
mm	mm												kg
50	95	70	44	100	129	70	28	210	255	24	18	16	5,45
	110	80	51	120	150	80	30	230	275	24	18	16	7,90
55	105	70	48	110	134	70	30	210	255	24	18	16	6,15
	115	80	56	130	156	80	30	230	280	24	18	16	8,55
60	110	80	51	120	150	80	30	230	275	24	18	16	7,90
	120	90	58	140	177	95	32	260	315	28	22	20	9,50

2.1 SNL and SE plummer block housings for bearings on an adapter sleeve, metric shafts
d_a 65 – 75 mm

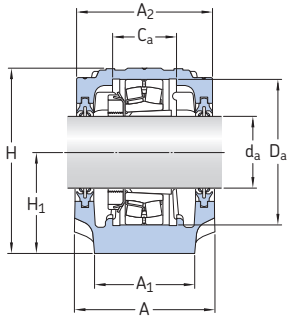

with TSN .. L

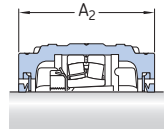

with TSN .. A

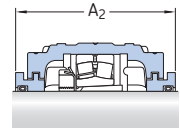

with TSN .. S

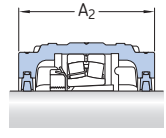

with TSN .. C

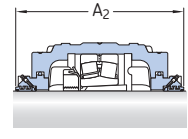

with TSN .. ND

Shaft diameter d_a	Housing	Appropriate parts Bearing[1]	Adapter sleeve[2]	Locating ring[3]	Seals	End cover	Width incl. seals A_2
mm	–	–					mm
65	**SE 515-612**	1215 K	H 215	FRB 15.5/130	TSN 515 L	ASNH 515-612	115
		2215 EKTN9	H 315	FRB 12.5/130	TSN 515 A		115
		22215 EK	H 315	FRB 12.5/130	TSN 515 C		115
		BS2-2215-2CSK	H 315 E	FRB 9/130	TSN 515 S		127
		C 2215 K	H 315 E	FRB 12.5/130	TSN 515 ND		175
	SNL 518-615	1315 K	H 315	FRB 14/160	TSN 615 L	ASNH 518-615	140
		2315 K	H 2315	FRB 5/160	TSN 615 A		140
		21315 EK	H 315	FRB 14/160	TSN 615 C		140
		22315 EK	H 2315	FRB 5/160	TSN 615 S		158
		C 2315 K	H 2315	FRB 5/160	TSN 615 ND		200
70	**SNL 516-613**	1216 K	H 216	FRB 16/140	TSN 516 L	ASNH 516-613	120
		2216 EKTN9	H 316	FRB 12.5/140	TSN 516 A		120
		22216 EK	H 316	FRB 12.5/140	TSN 516 C		120
		BS2-2216-2CSK	H 316 E	FRB 9/140	TSN 516 S		138
		C 2216 K	H 316 E	FRB 12.5/140	TSN 516 ND		205
	SNL 519-616	1316 K	H 316	FRB 14.5/170	TSN 616 L	ASNH 519-616	145
		2316 K	H 2316	FRB 5/170	TSN 616 A		145
		21316 EK	H 316	FRB 14.5/170	TSN 616 C		145
		22316 EK	H 2316	FRB 5/170	TSN 616 S		163
		C 2316 K	H 2316	FRB 5/170	TSN 616 ND		205
75	**SNL 517**	1217 K	H 217	FRB 16.5/150	TSN 517 L	ASNH 517	125
		2217 K	H 317	FRB 12.5/150	TSN 517 A		125
		22217 EK	H 317	FRB 12.5/150	TSN 517 C		125
		BS2-2217-2CSK	H 317 E	FRB 8.5/150	TSN 517 S		143
		C 2217 K	H 317 E	FRB 12.5/150	TSN 517 ND		210
	SNL 520-617	1317 K	H 317	FRB 14.5/180	TSN 617 L	ASNH 520-617	160
		2317 K	H 2317	FRB 5/180	TSN 617 A		160
		21317 EK	H 317	FRB 14.5/180	TSN 617 C		160
		22317 EK	H 2317	FRB 5/180	TSN 617 S		178
		C 2317 K	H 2317	FRB 5/180	TSN 617 ND		220

[1] Only the basic bearing designation is listed. Other bearing variants can also fit the housing. 12(00), 22(00), 13(00) – self-aligning ball bearings, 222(00), 213(00), BS2... – spherical roller bearings, C... – CARB toroidal roller bearing
[2] The adapter sleeve fits the bearing in the same line only. Other adapter sleeve variants can also be used.
[3] The locating ring fits the bearing in the same line only. Two locating rings are required for each housing.

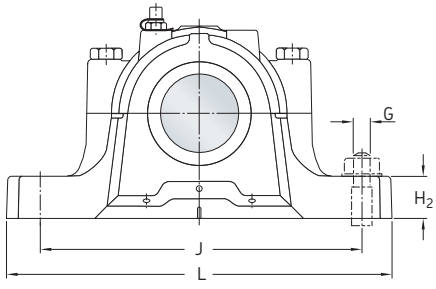

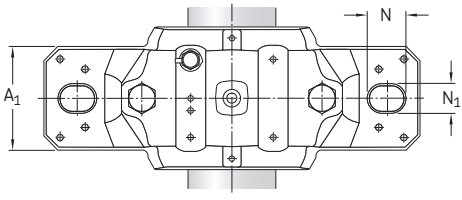

Shaft diameter	Dimensions												Mass Housing
d_a	A	A_1	C_a	D_a	H	H_1	H_2	J	L	N	N_1	G	
mm	mm												kg
65	115	80	56	130	156	80	30	230	280	24	18	16	8,55
	140	100	65	160	194	100	35	290	345	28	22	20	12,5
70	120	90	58	140	177	95	32	260	315	28	22	20	9,50
	145	100	68	170	212	112	35	290	345	28	22	20	13,7
75	125	90	61	150	183	95	32	260	320	28	22	20	10,0
	160	110	70	180	218	112	40	320	380	32	26	24	17,6

2.1 SNL and SE plummer block housings for bearings on an adapter sleeve, metric shafts
d_a 80 – 90 mm

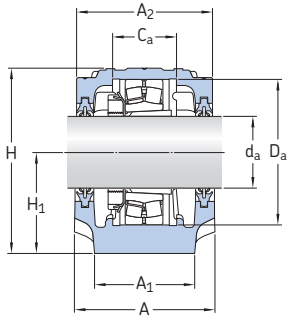

with TSN .. L

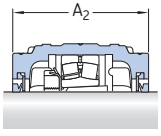

with TSN .. A

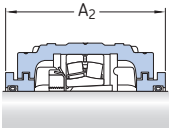

with TSN .. S

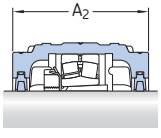

with TSN .. C

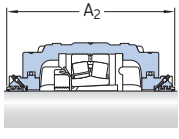

with TSN .. ND

Shaft diameter d_a	Housing	Appropriate parts Bearing[1]	Adapter sleeve[2]	Locating ring[3]	Seals	End cover	Width incl. seals A_2
mm	–	–					mm
80	**SNL 518-615**	1218 K	H 218	FRB 17.5/160	TSN 518 L	ASNH 518-615	140
		2218 K	H 318	FRB 12.5/160	TSN 518 A		140
		22218 EK	H 318	FRB 12.5/160	TSN 518 C		140
		BS2-2218-2CSK	H 2318 E/L73	FRB 8.5/160	TSN 518 S		158
		23218 CCK/W33	H 2318	FRB 6.25/160	TSN 518 ND		225
		C 2218 K	H 318 E	FRB 12.5/160			
85	**SNL 519-616**	1219 K	H 219	FRB 18/170	TSN 519 L	ASNH 519-616	145
		2219 KM	H 319	FRB 12.5/170	TSN 519 A		145
		22219 EK	H 319	FRB 12.5/170	TSN 519 C		145
		C 2219 K	H 319 E	FRB 12.5/170	TSN 519 S		163
					TSN 519 ND		220
	SNL 522-619	1319 K	H 319	FRB 17.5/200	TSN 619 A	ASNH 522-619	175
		2319 KM	H 2319	FRB 6.5/200	TSN 619 C		175
		21319 EK	H 319	FRB 17.5/200	TSN 619 S		191
		22319 EK	H 2319	FRB 6.5/200	TSN 619 ND		235
		C 2319 K	H 2319	FRB 6.5/200			
90	**SNL 520-617**	1220 K	H 220	FRB 18/180	TSN 520 L	ASNH 520-617	160
		2220 KM	H 320	FRB 12/180	TSN 520 A		160
		22220 EK	H 320	FRB 12/180	TSN 520 C		160
		BS2-2220-2CS5K	H 2320 E	FRB 7.5/180	TSN 520 S		178
		23220 CCK/W33	H 2320	FRB 4.85/180	TSN 520 ND		230
		C 2220 K	H 320 E	FRB 12/180			
	SNL 524-620	1320 K	H 320	FRB 19.5/215	TSN 620 A	ASNH 524-620	185
		2320 KM	H 2320	FRB 6.5/215	TSN 620 C		185
		21320 EK	H 320	FRB 19.5/215	TSN 620 S		199
		22320 EK	H 2320	FRB 6.5/215	TSN 620 ND		240
		C 2320 K	H 2320	FRB 6.5/215			

[1] Only the basic bearing designation is listed. Other bearing variants can also fit the housing. 12(00), 22(00), 13(00) – self-aligning ball bearings, 222(00), 213(00), BS2... – spherical roller bearings, C... – CARB toroidal roller bearing
[2] The adapter sleeve fits the bearing in the same line only. Other adapter sleeve variants can also be used.
[3] The locating ring fits the bearing in the same line only. Two locating rings are required for each housing.

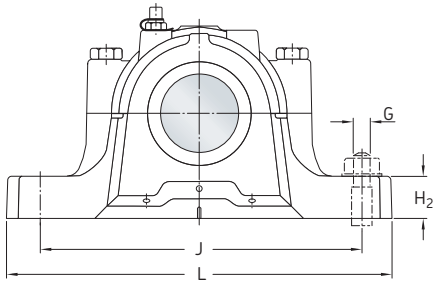

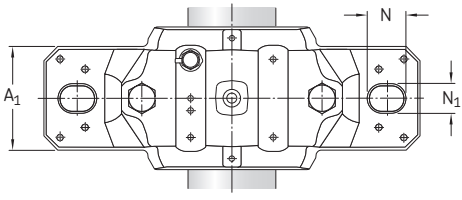

Shaft diameter	Dimensions												Mass Housing
d_a	A	A_1	C_a	D_a	H	H_1	H_2	J	L	N	N_1	G	
mm	mm												kg
80	140	100	65	160	194	100	35	290	345	28	22	20	12,5
85	145	100	68	170	212	112	35	290	345	28	22	20	13,7
	175	120	80	200	242	125	45	350	410	32	26	24	22,0
90	160	110	70	180	218	112	40	320	380	32	26	24	17,6
	185	120	86	215	271	140	45	350	410	32	26	24	26,2

2.1 SNL and SE plummer block housings for bearings on an adapter sleeve, metric shafts
d_a 100 – 135 mm

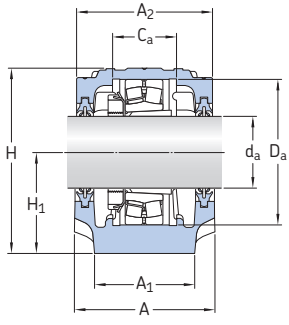

with TSN .. L

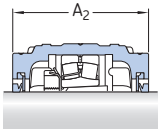

with TSN .. A

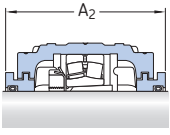

with TSN .. S

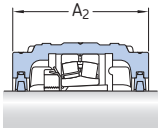

with TSN .. C

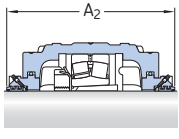

with TSN .. ND

Shaft diameter d_a	Housing	Appropriate parts Bearing[1]	Adapter sleeve[2]	Locating ring[3]	Seals	End cover	Width incl. seals A_2
mm	–	–					mm
100	**SNL 522-619**	1222 K	H 222	FRB 21/200	TSN 522 L	ASNH 522-619	175
		2222 KM	H 322	FRB 13.5/200	TSN 522 A		175
		22222 EK	H 322	FRB 13.5/200	TSN 522 C		175
		BS2-2222-2CS5K	H 2322 E	FRB 8.5/200	TSN 522 S		191
		23222 CCK/W33	H 2322	FRB 5.1/200	TSN 522 ND		250
		C 2222 K	H 322 E	FRB 13.5/200			
110	**SNL 524-620**	1224 KM	H 3024	FRB 22/215	TSN 524 L	ASNH 524-620	185
		22224 EK	H 3124	FRB 14/215	TSN 524 A		185
		BS2-2224-2CS5K	H 2324 EH	FRB 8.5/215	TSN 524 C		185
		23224 CCK/W33	H 2324	FRB 5/215	TSN 524 S		199
		C 2224 K	H 3124 L	FRB 14/215	TSN 524 ND		260
		C 3224 K	H 2324 L	FRB 5/215			
115	**SNL 526**	22226 EK	H 3126	FRB 13/230	TSN 526 L	ASNH 526	190
		BS2-2226-2CS5K	H 2326 L	FRB 7.5/230	TSN 526 A		190
		23226 CCK/W33	H 2326	FRB 5/230	TSN 526 C		190
		23226-2CS5K	H 2326 L	FRB 5/230	TSN 526 S		208
		C 2226 K	H 3126 L	FRB 13/230	TSN 526 ND		265
125	**SNL 528**	22228 CCK/W33	H 3128	FRB 15/250	TSN 528 L	ASNH 528	205
		22228-2CS5K	H 3128 L	FRB 15/250	TSN 528 A		205
		23228 CCK/W33	H 2328	FRB 5/250	TSN 528 C		205
		23228-2CS5K	H 2328	FRB 5/250	TSN 528 S		223
		C 2228 K	H 3128 L	FRB 15/250	TSN 528 ND		285
135	**SNL 530**	22230 CCK/W33	H 3130	FRB 16.5/270	TSN 530 L	ASNH 530	220
		22230-2CS5K	H 3130	FRB 16.5/270	TSN 530 A		220
		23230 CCK/W33	H 2330	FRB 5/270	TSN 530 C		220
		C 2230 K	H 3130 L	FRB 16.5/270	TSN 530 S		241
					TSN 530 ND		295

[1] Only the basic bearing designation is listed. Other bearing variants can also fit the housing. 12(00), 22(00), 13(00) – self-aligning ball bearings, 222(00), 213(00), BS2... – spherical roller bearings, C... – CARB toroidal roller bearing
[2] The adapter sleeve fits the bearing in the same line only. Other adapter sleeve variants can also be used.
[3] The locating ring fits the bearing in the same line only. Two locating rings are required for each housing.

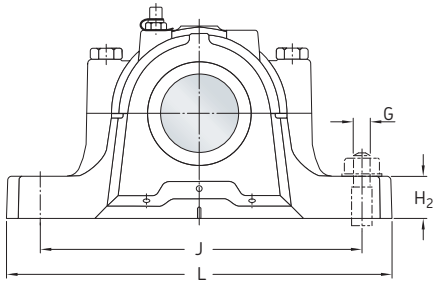

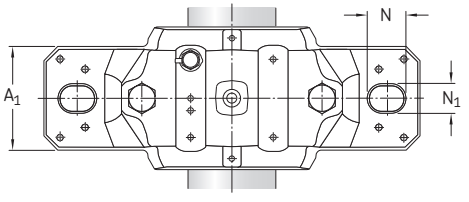

Shaft diameter	**Dimensions**												**Eye bolt** acc. to DIN 580	**Mass** Housing
d_a	A	A_1	C_a	D_a	H	H_1	H_2	J	L	N	N_1	G		
mm	mm												–	kg
100	175	120	80	200	242	125	45	350	410	32	26	24	–	22,0
110	185	120	86	215	271	140	45	350	410	32	26	24	M 10	26,2
115	190	130	90	230	290	150	50	380	445	35	28	24	M 10	33,0
125	205	150	98	250	302	150	50	420	500	42	35	30	M 12	40,0
135	220	160	106	270	323	160	60	450	530	42	35	30	M 12	49,0

2.1 SNL and SE plummer block housings for bearings on an adapter sleeve, metric shafts
d_a **140** mm

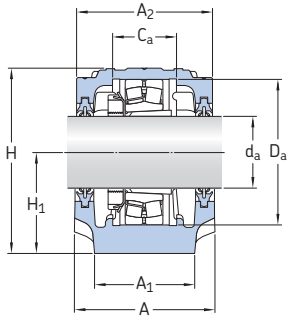

with TSN .. L

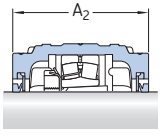

with TSN .. A

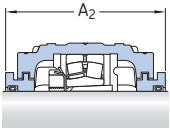

with TSN .. S

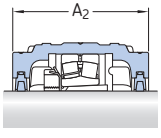

with TSN .. C

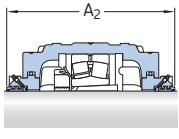

with TSN .. ND

Shaft diameter d_a	**Housing**	**Appropriate parts** Bearing[1]	Adapter sleeve[2]	Locating ring[3]	Seals	End cover	Width incl. seals A_2
mm	–	–					mm
140	**SNL 532**	22232 CCK/W33 22232-2CS5K 23232 CCK/W33 C 3232 K	H 3132 H 3132 H 2332 H 2332 L	FRB 17/290 FRB 17/290 FRB 5/290 FRB 5/290	TSN 532 L TSN 532 A TSN 532 C TSN 532 S TSN 532 ND	ASNH 532	235 235 235 254 315

[1] Only the basic bearing designation is listed. Other bearing variants can also fit the housing. 12(00), 22(00), 13(00) – self-aligning ball bearings, 222(00), 213(00), BS2... – spherical roller bearings, C... – CARB toroidal roller bearing
[2] The adapter sleeve fits the bearing in the same line only. Other adapter sleeve variants can also be used.
[3] The locating ring fits the bearing in the same line only. Two locating rings are required for each housing.

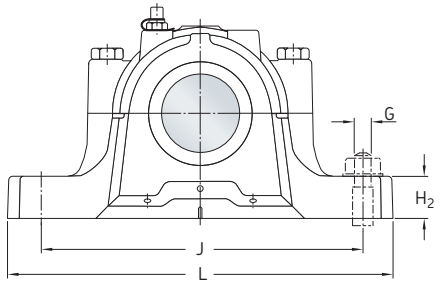

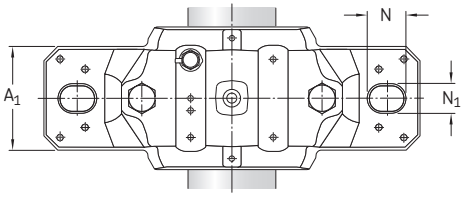

Shaft diameter	**Dimensions**												**Eye bolt** acc. to DIN 580	**Mass** Housing
d_a	A	A_1	C_a	D_a	H	H_1	H_2	J	L	N	N_1	G		
mm	mm												–	kg
140	235	160	114	290	344	170	60	470	550	42	35	30	M 12	55,0

2.2 SNL and SE plummer block housings for bearings on an adapter sleeve, inch shafts

d_a **3/4 – 1** in.
19,05 – 25,4 mm

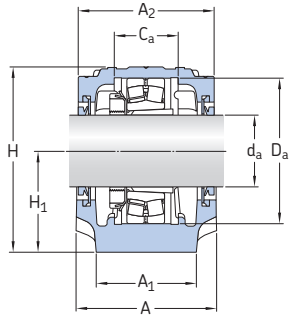

with TSN .. A

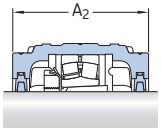

with TSN .. C

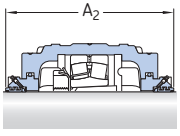

with TSN .. ND

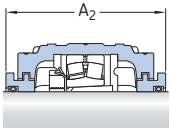

with TSN .. S

Shaft diameter d_a	Housing	Appropriate parts Bearing[1]	Adapter sleeve[2]	Locating ring[3]	Seals	End cover	Width incl. seals A_2
in./*mm*	–	–					mm
3/4 *19,05*	**SNL 505**	1205 EKTN9 2205 EKTN9 22205 EK C 2205 KTN9	HE 205 HE 305 HE 305 HE 305 E	FRB 5/52 FRB 3.5/52 FRB 3.5/52 FRB 3.5/52	TSN 505 A TSN 505 C TSN 505 SE TSN 505 NDE	ASNH 505	67 67 80 125
	SNL 506-605	1305 EKTN9	HE 305	FRB 7.5/62	TSN 605 A TSN 605 C TSN 605 SE TSN 605 NDE	ASNH 506-605	77 77 89 135
15/16 *23,813*	**SNL 506-605**	1206EKTN9 2206 EKTN9 22206 EK C 2206 KTN9	HA 206 HA 306 HA 306 HA 306 E	FRB 8/62 FRB 6/62 FRB 6/62 FRB 6/62	TSN 506 A TSN 506 C TSN 506 SA TSN 506 NDA	ASNH 506-605	77 77 89 135
	SE 507-606	1306 EKTN9 2306 K 21306 CCK	HA 306 HA 2306 HA 306	FRB 7.5/72 FRB 3.5/72 FRB 7.5/72	TSN 606 A TSN 606 C TSN 606 SA TSN 606 NDA	ASNH 507-606	82 82 94 140
1 *25,4*	**SNL 506-605**	1206 EKTN9 2206 EKTN9 22206 EK C 2206 KTN9	HE 206 HE 306 HE 306 HE 306 E	FRB 8/62 FRB 6/62 FRB 6/62 FRB 6/62	TSN 506 A TSN 506 C TSN 506 SE TSN 506 NDE	ASNH 506-605	77 77 89 135
	SE 507-606	1306 EKTN9 2306 K 21306 CCK	HE 306 HE 2306 HE 2306	FRB 7.5/72 FRB 3.5/72 FRB 7.5/72	TSN 606 A TSN 606 C TSN 606 SE TSN 606 NDE	ASNH 507-606	82 82 94 140

[1] Only the basic bearing designation is listed. Other bearing variants can also fit the housing. 12(00), 22(00), 13(00), self-aligning ball bearings, 222(00), 213(00), BS2...– spherical roller bearings, C... – CARB toroidal roller bearing
[2] The adapter sleeve fits the bearing in the same line only. Other adapter sleeve variants can also be used.
[3] The locating ring fits the bearing in the same line only. Two locating rings are required for each housing.

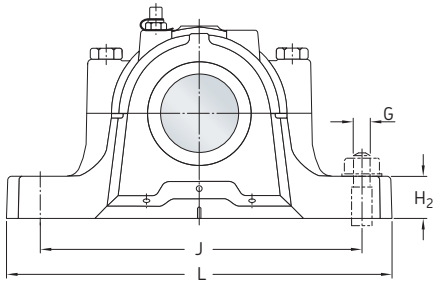

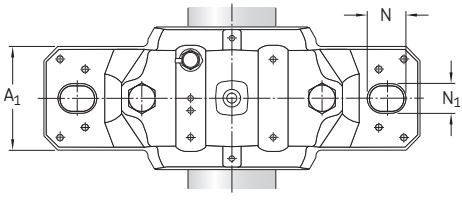

Shaft diameter	Dimensions													Mass Housing
d_a	A	A_1	C_a	D_a	H	H_1	H_2	J	L	N	N_1	G	G	
in./*mm*	mm												in.	kg
3/4 *19,05*	67	46	25	52	74	40	19	130	165	20	15	12	1/2	1,45
	77	52	32	62	89	50	22	150	185	20	15	12	1/2	2,00
15/16 *23,813*	77	52	32	62	89	50	22	150	185	20	15	12	1/2	2,00
	82	52	34	72	94	50	22	150	185	20	15	12	1/2	2,60
1 *25,4*	77	52	32	62	89	50	22	150	185	20	15	12	1/2	2,00
	83	52	34	72	94	50	22	150	185	20	15	12	1/2	2,60

2.2 SNL and SE plummer block housings for bearings on an adapter sleeve, inch shafts

d_a **1 3/16 – 1 7/16** in.
30,163 – 36,513 mm

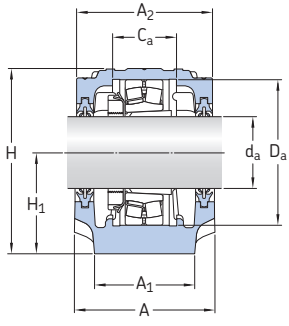

with TSN .. L

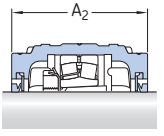

with TSN .. A

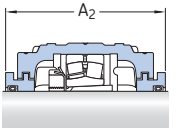

with TSN .. S

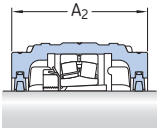

with TSN .. C

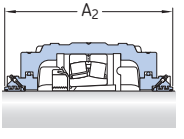

with TSN .. ND

Shaft diameter d_a	**Housing**	**Appropriate parts** Bearing[1]	Adapter sleeve[2]	Locating ring[3]	Seals	End cover	Width incl. seals A_2
in./*mm*	–	–					mm
1 3/16 *30,163*	**SE 507-606**	1207 EKTN9 2207 EKTN9 22207 EK C 2207 KTN9	HA 207 HA 307 HA 307 HA 307 E	FRB 8.5/72 FRB 5.5/72 FRB 5.5/72 FRB 5.5/72	TSN 507 L TSN 507 A TSN 507 C TSN 507 SA TSNA 507 NDA	ASNH 507-606	82 82 82 94 145
	SE 508-607	1307 EKTN9 2307 EKTN9 21307 CCK	HA 307 HA 2307 HA 307	FRB 9/80 FRB 4/80 FRB 9/80	TSN 607 L TSN 607 A TSN 607 C TSN 607 SA TSN 607 NDA	ASNH 508-607	85 85 85 97 145
1 1/4 *31,75*	**SE 508-607**	1208 EKTN9 2208 EKTN9 22208 EK C 2208 KTN9	HE 208 HE 308 HE 308 HE 308 E	FRB 10.5/80 FRB 8/80 FRB 8/80 FRB 8/80	TSN 508 AE TSN 508 CE TSN 508 SE TSN 508 NDE	ASNH 508-607	85 85 97 150
	SE 510-608	1308 EKTN9 2308 EKTN9 21308 EK 22308 EK	HE 308 HE 2308 HE 308 HE 2308	FRB 9/90 FRB 4/90 FRB 9/90 FRB 4/90	TSN 608 AE TSN 608 CE TSN 608 SE TSN 608 NDE	ASNH 510-608	90 90 102 150
1 7/16 *36,513*	**SE 509**	1209 EKTN9 2209 EKTN9 22209 EK BS2-2209-2CSK C 2209 KTN9	HA 209 HA 309 HA 309 HA 309 E HA 309 E	FRB 5.5/85 FRB 3.5/85 FRB 3.5/85 FRB 1/85 FRB 3.5/85	TSN 509 AE TSN 509 CE TSN 509 SA TSN 509 NDA	ASNH 509	85 85 97 150
	SE 511-609	1309 EKTN9 2309 EKTN9 21309 EK 22309 EK	HA 309 HA 2309 HA 309 HA 2309	FRB 9.5/100 FRB 4/100 FRB 9.5/100 FRB 4/100	TSN 609 AE TSN 609 CE TSN 609 SA TSN 609 NDA	ASNH 511-609	95 95 107 155

[1] Only the basic bearing designation is listed. Other bearing variants can also fit the housing. 12(00), 22(00), 13(00), self-aligning ball bearings, 222(00), 213(00), BS2...– spherical roller bearings, C... – CARB toroidal roller bearing
[2] The adapter sleeve fits the bearing in the same line only. Other adapter sleeve variants can also be used.
[3] The locating ring fits the bearing in the same line only. Two locating rings are required for each housing.

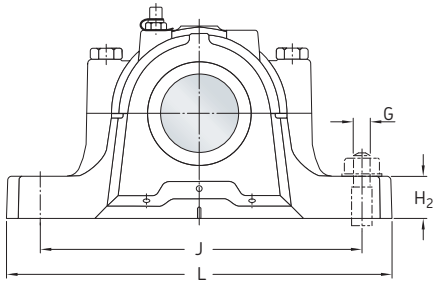

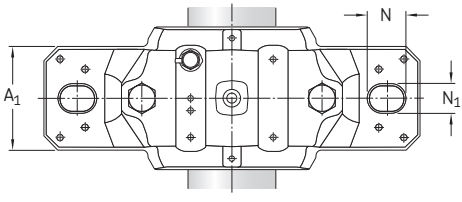

Shaft diameter	Dimensions													Mass Housing
d_a	A	A_1	C_a	D_a	H	H_1	H_2	J	L	N	N_1	G	G	
in./*mm*	mm												in.	kg
1 3/16 *30,163*	83	52	34	72	94	50	22	150	185	20	15	12	1/2	2,60
	85	60	39	80	108	60	25	170	205	20	15	12	1/2	2,90
1 1/4 *31,75*	85	60	39	80	108	60	25	170	205	20	15	12	1/2	3,40
	90	60	41	90	114	60	25	170	205	20	12	12	1/2	3,85
1 7/16 *36,513*	85	60	30	85	109	60	25	170	205	20	15	12	1/2	3,40
	95	70	44	100	129	70	28	210	255	24	18	16	5/8	5,45

2.2 SNL and SE plummer block housings for bearings on an adapter sleeve, inch shafts

d_a **1 1/2 – 1 3/4** in.
38,1 – 44,45 mm

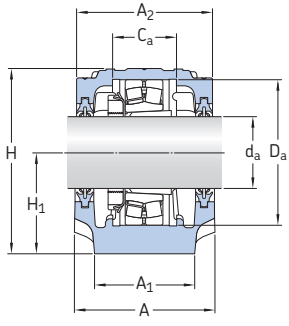

with TSN .. L

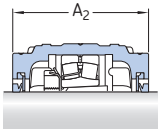

with TSN .. A

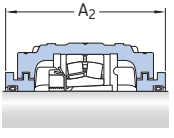

with TSN .. S

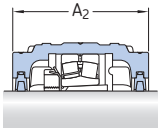

with TSN .. C

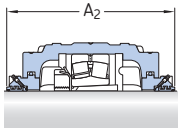

with TSN .. ND

Shaft diameter d_a	Housing	Appropriate parts Bearing[1]	Adapter sleeve[2]	Locating ring[3]	Seals	End cover	Width incl. seals A_2
in./*mm*	–	–					mm
1 1/2 *38,1*	**SE 509**	1209 EKTN9 2209 EKTN9 22209 EK BS2-2209-2CSK C 2209 KTN9	HE 209 HE 309 HE 309 HE 309 E HE 309 E	FRB 5.5/85 FRB 3.5/85 FRB 3.5/85 FRB 1/85 FRB 3.5/85	TSN 509 AE TSN 509 CE TSN 509 SE TSN 509 NDE	ASNH 509	85 85 97 150
	SE 511-609	1309 EKTN9 2309 EKTN9 21309 EK 22309 EK	HE 309 HE 2309 HE 309 HE 2309	FRB 9.5/100 FRB 4/100 FRB 9.5/100 FRB 4/100	TSN 609 AE TSN 609 CE TSN 609 SE TSN 609 NDE	ASNH 511-609	95 95 107 155
1 11/16 *42,863*	**SE 510-608**	1210 EKTN9 2210 EKTN9 22210 EK BS2-2210-2CSK C 2210 KTN9	HA 210 HA 310 HA 310 HA 310 E HA 310 E	FRB 10.5/90 FRB 9/90 FRB 9/90 FRB 6.5/90 FRB 9/90	TSN 510 A TSN 510 C TSN 510 SA TSN 510 NDA	ASNH 510-608	90 90 102 155
	SE 512-610	1310 EKTN9 2310 K 21310 EK 22310 EK	HA 310 HA 2310 HA 310 HA 2310	FRB 10.5/110 FRB 4/110 FRB 10.5/110 FRB 4/110	TSN 610 A TSN 610 C TSN 610 SA TSN 610 NDA	ASNH 512-610	105 105 117 165
1 3/4 *44,45*	**SE 510-608**	1210 EKTN9 2210 EKTN9 22210 EK BS2-2210-2CSK C 2210 KTN9	HE 210 HE 310 HE 310 HE 310 E HE 310 E	FRB 10.5/90 FRB 9/90 FRB 9/90 FRB 6.5/90 FRB 9/90	TSN 510 L TSN 510 A TSN 510 C TSN 510 SE TSN 510 NDE	ASNH 510-608	90 90 90 102 155
	SE 512-610	1310 EKTN9 2310 K 21310 EK 22310 EK	HE 310 HE 2310 HE 310 HE 2310	FRB 10.5/110 FRB 4/110 FRB 10.5/110 FRB 4/110	TSN 610 L TSN 610 A TSN 610 C TSN 610 SE TSN 610 NDE	ASNH 512-610	105 105 105 117 165

[1] Only the basic bearing designation is listed. Other bearing variants can also fit the housing. 12(00), 22(00), 13(00), self-aligning ball bearings, 222(00), 213(00), BS2...– spherical roller bearings, C... – CARB toroidal roller bearing
[2] The adapter sleeve fits the bearing in the same line only. Other adapter sleeve variants can also be used.
[3] The locating ring fits the bearing in the same line only. Two locating rings are required for each housing.

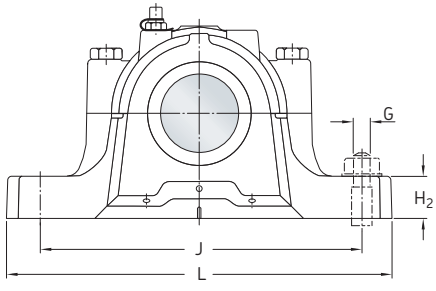

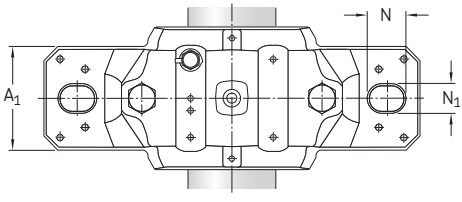

Shaft diameter	**Dimensions**													**Mass** Housing
d_a	A	A_1	C_a	D_a	H	H_1	H_2	J	L	N	N_1	G	G	
in./*mm*	mm												in.	kg
1 1/2 *38,1*	85	60	30	85	109	60	25	170	205	20	15	12	1/2	3,40
	95	70	44	100	129	70	28	210	255	24	18	16	5/8	5,45
1 11/16 *42,863*	90	60	41	90	114	60	25	170	205	20	15	12	1/2	3,85
	105	70	48	110	134	70	30	210	255	24	18	16	5/8	6,15
1 3/4 *44,45*	90	60	41	90	114	60	25	170	205	20	15	12	1/2	3,85
	105	70	48	110	134	70	30	210	255	24	18	16	5/8	6,15

2.2 SNL and SE plummer block housings for bearings on an adapter sleeve, inch shafts

d_a **1 15/16 – 2 3/16** in.
49,213 – 55,563 mm

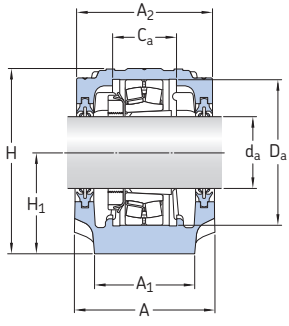

with TSN .. L

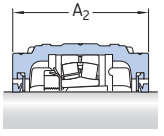

with TSN .. A

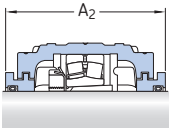

with TSN .. S

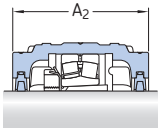

with TSN .. C

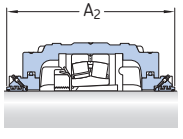

with TSN .. ND

Shaft diameter d_a	Housing	Appropriate parts Bearing[1]	Adapter sleeve[2]	Locating ring[3]	Seals	End cover	Width incl. seals A_2
in./*mm*	–	–					mm
1 15/16 *49,213*	**SE 511-609**	1211 EKTN9 2211 EKTN9 22211 EK BS2-2211-2CSK C 2211 KTN9	HA 211 HA 311 HA 311 HA 311 E HA 311 E	FRB 11.5/100 FRB 9.5/100 FRB 9.5/100 FRB 6.5/100 FRB 9.5/100	TSN 511 L TSN 511 A TSN 511 C TSN 511 SA TSN 511 NDA	ASNH 511-609	95 95 95 107 165
	SE 513-611	1311 EKTN9 2311 K 21311 EK 22311 EK	HA 311 HA 2311 HA 311 HA 2311	FRB 11/120 FRB 4/120 FRB 11/120 FRB 4/120	TSN 611 L TSN 611 A TSN 611 C TSN 611 SA TSN 611 NDA	ASNH 513-611	110 110 110 122 170
2 *50,8*	**SE 511-609**	1211 EKTN9 2211 EKTN9 22211 EK BS2-2211-2CSK C 2211 KTN9	HE 211 B HE 311 B HE 311 B HE 311 BE HE 311 BE	FRB 11.5/100 FRB 9.5/100 FRB 9.5/100 FRB 6.5/100 FRB 9.5/100	TSN 511 L TSN 511 A TSN 511 C TSN 511 SE TSN 511 NDE	ASNH 511-609	95 95 95 107 165
	SE 513-611	1311 EKTN9 2311 K 21311 EK 22311 EK	HE 311 HE 2311 B HE 311 HE 2311 B	FRB 11/120 FRB 4/120 FRB 11/120 FRB 4/120	TSN 611 L TSN 611 A TSN 611 C TSN 611 SE TSN 611 NDE	ASNH 513-611	110 110 110 122 170
2 3/16 *55,563*	**SE 513-611**	1213 EKTN9 2213 EKTN9 22213 EK BS2-2213-2CSK C 2213 KTN9	HA 213 HA 313 HA 313 HA 2313 E HA 313 E	FRB 14/120 FRB 10/120 FRB 10/120 FRB 6.5/120 FRB 10/120	TSN 513 LA TSN 513 AE TSN 513 CE TSN 513 SA TSN 513 NDA	ASNH 513-611	110 110 110 122 180
	SNL 516-613	1313 EKTN9 2313 K 21313 EK 22313 EK	HA 313 HA 2313 HA 313 HA 2313	FRB 12.5/140 FRB 5/140 FRB 12.5/140 FRB 5/140	TSN 613 AE TSN 613 CE TSN 613 SA TSN 613 NDA	ASNH 516-613	120 120 138 180

[1] Only the basic bearing designation is listed. Other bearing variants can also fit the housing. 12(00), 22(00), 13(00), self-aligning ball bearings, 222(00), 213(00), BS2...– spherical roller bearings, C... – CARB toroidal roller bearing
[2] The adapter sleeve fits the bearing in the same line only. Other adapter sleeve variants can also be used.
[3] The locating ring fits the bearing in the same line only. Two locating rings are required for each housing.

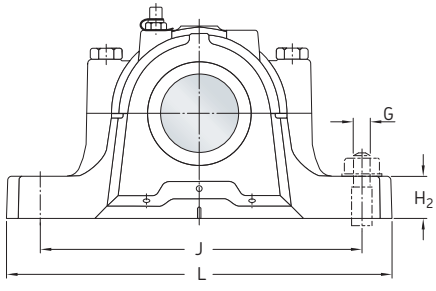

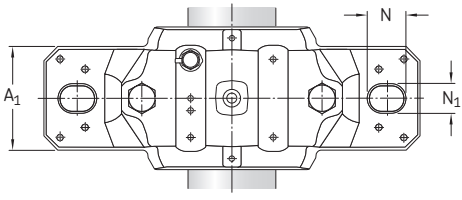

Shaft diameter	**Dimensions**													**Mass** Housing
d_a	A	A_1	C_a	D_a	H	H_1	H_2	J	L	N	N_1	G	G	
in./*mm*	mm												in.	kg
1 15/16 *49,213*	95	70	44	100	129	70	28	210	255	24	18	16	5/8	5,45
	110	80	51	120	150	80	30	230	275	24	18	16	5/8	7,90
2 *50,8*	95	70	44	100	129	70	28	210	255	24	18	16	5/8	5,45
	110	80	51	120	150	80	30	230	275	24	18	16	5/8	7,90
2 3/16 *55,563*	110	80	51	120	150	80	30	230	275	24	18	16	5/8	7,90
	120	90	58	140	177	95	32	260	315	28	22	20	3/4	9,50

2.2 SNL and SE plummer block housings for bearings on an adapter sleeve, inch shafts

d_a **2 1/4 – 2 1/2** in.
57,15 – 63,5 mm

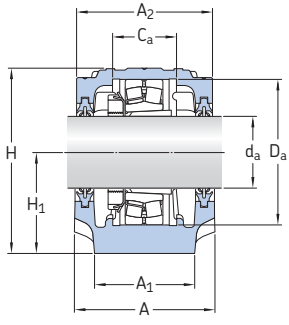

with TSN .. L

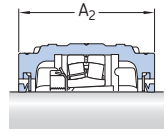

with TSN .. A

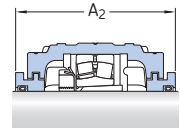

with TSN .. S

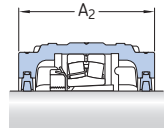

with TSN .. C

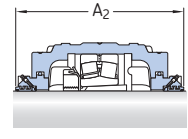

with TSN .. ND

Shaft diameter d_a	**Housing**	**Appropriate parts** Bearing[1]	Adapter sleeve[2]	Locating ring[3]	Seals	End cover	Width incl. seals A_2
in./*mm*	–	–					mm
2 1/4 *57,15*	**SE 513-611**	1213 EKTN9	HE 213	FRB 14/120	TSN 513 A	ASNH 513-611	110
		2213 EKTN9	HE 313	FRB 10/120	TSN 513 CE		110
		22213 EK	HE 313	FRB 10/120	TSN 513 SE		122
		BS2-2213-2CSK	HE 2313 E	FRB 6.5/120	TSN 513 NDE		180
		C 2213 KTN9	HE 313 E	FRB 10/120			
	SNL 516-613	1313 EKTN9	HE 313	FRB 12.5/140	TSN 613 A	ASNH 516-613	120
		2313 K	HE 2313	FRB 5/140	TSN 613 CE		120
		21313 EK	HE 313	FRB 12.5/140	TSN 613 SE		138
		22313 EK	HE 2313	FRB 5/140	TSN 613 NDE		180
2 7/16 *61,913*	**SE 515-612**	1215 K	HA 215	FRB 15.5/130	TSN 515 LA	ASNH 515-612	115
		2215 EKTN9	HA 315	FRB 12.5/130	TSN 515 AE		115
		22215 EK	HA 315	FRB 12.5/130	TSN 515 CE		115
		BS2-2215-2CSK	HA 315 E	FRB 9/130	TSN 515 SA		127
		C 2215 K	HA 315 E	FRB 12.5/130	TSN 515 NDA		175
	SNL 518-615	1315 K	HA 315	FRB 14/160	TSN 615 AE	ASNH 518-615	140
		2315 K	HA 2315	FRB 5/160	TSN 615 CE		140
		21315 EK	HA 315	FRB 14/160	TSN 615 SA		158
		22315 EK	HA 2315	FRB 5/160	TSN 615 NDA		200
		C 2315 K	HA 2315	FRB 5/160			
2 1/2 *63,5*	**SE 515-612**	1215 K	HE 215	FRB 15.5/130	TSN 515 A	ASNH 515-612	115
		2215 EKTN9	HE 315	FRB 12.5/130	TSN 515 C		115
		22215 EK	HE 315	FRB 12.5/130	TSN 515 SE		127
		BS2-2215-2CSK	HE 315 E	FRB 9/130	TSN 515 NDE		175
		C 2215 K	HE 315 E	FRB 12.5/130			
	SNL 518-615	1315 K	HE 315	FRB 14/160	TSN 615 A	ASNH 518-615	140
		2315 K	HE 2315	FRB 5/160	TSN 615 C		140
		21315 EK	HE 315	FRB 14/160	TSN 615 SE		158
		22315 EK	HE 2315	FRB 5/160	TSN 615 NDE		200
		C 2315 K	HE 2315	FRB 5/160			

[1] Only the basic bearing designation is listed. Other bearing variants can also fit the housing. 12(00), 22(00), 13(00), self-aligning ball bearings, 222(00), 213(00), BS2...– spherical roller bearings, C... – CARB toroidal roller bearing
[2] The adapter sleeve fits the bearing in the same line only. Other adapter sleeve variants can also be used.
[3] The locating ring fits the bearing in the same line only. Two locating rings are required for each housing.

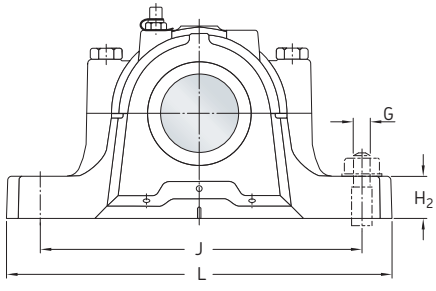

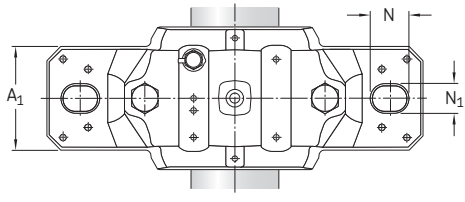

Shaft diameter	Dimensions													Mass Housing
d_a	A	A_1	C_a	D_a	H	H_1	H_2	J	L	N	N_1	G	G	
in./*mm*	mm												in.	kg
2 1/4 *57,15*	110	80	51	120	150	80	30	230	275	24	18	16	5/8	7,90
	120	90	58	140	177	95	32	260	315	28	22	20	3/4	9,50
2 7/16 *61,913*	115	80	56	130	156	80	30	230	280	24	18	16	5/8	8,55
	140	100	65	160	194	100	35	290	345	28	22	20	3/4	12,5
2 1/2 *63,5*	115	80	56	130	156	80	30	230	280	24	18	16	5/8	8,55
	140	100	65	160	194	100	35	290	345	28	22	20	3/4	12,5

2.2 SNL and SE plummer block housings for bearings on an adapter sleeve, inch shafts

d_a **2 11/16 – 2 15/16** in.
68,263 – 74,613 mm

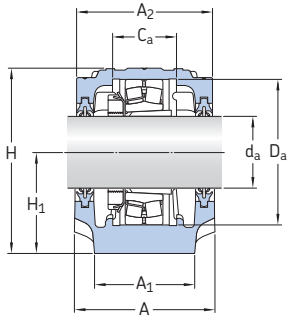

with TSN .. L

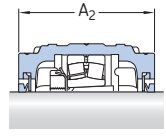

with TSN .. A

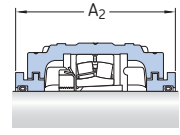

with TSN .. S

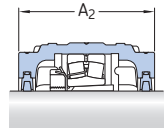

with TSN .. C

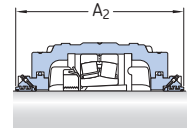

with TSN .. ND

Shaft diameter d_a	Housing	Appropriate parts Bearing[1]	Adapter sleeve[2]	Locating ring[3]	Seals	End cover	Width incl. seals A_2
in./*mm*	–	–					mm
2 11/16 *68,263*	**SNL 516-613**	1216 K	HA 216	FRB 16/140	TSN 516 A	ASNH 516-613	120
		2216 EKTN9	HA 316	FRB 12.5/140	TSN 516 C		120
		22216 EK	HA 316	FRB 12.5/140	TSN 516 SA		138
		BS2-2216-2CSK	HA 316 E	FRB 9/140	TSN 516 NDA		205
		C 2216 K	HA 316 E	FRB 12.5/140			
	SNL 519-616	1316 K	HA 316	FRB 14.5/170	TSN 616 A	ASNH 519-616	145
		2316 K	HA 2316	FRB 5/170	TSN 616 C		145
		21316 EK	HA 316	FRB 14.5/170	TSN 616 SA		163
		22316 EK	HA 2316	FRB 5/170	TSN 616 NDA		205
		C 2316 K	HA 2316	FRB 5/170			
2 3/4 *69,85*	**SNL 516-613**	1216 K	HE 216	FRB 16/140	TSN 516 L	ASNH 516-613	120
		2216 EKTN9	HE 316	FRB 12.5/140	TSN 516 A		120
		22216 EK	HE 316	FRB 12.5/140	TSN 516 C		120
		BS2-2216-2CSK	HE 316 E	FRB 9/140	TSN 516 SE		138
		C 2216 K	HE 316 E	FRB 12.5/140	TSN 516 NDE		205
	SNL 519-616	1316 K	HE 316	FRB 14.5/170	TSN 616 L	ASNH 519-616	145
		2316 K	HE 2316	FRB 5/170	TSN 616 A		145
		21316 EK	HE 316	FRB 14.5/170	TSN 616 C		145
		22316 EK	HE 2316	FRB 5/170	TSN 616 SE		163
		C 2316 K	HE 2316	FRB 5/170	TSN 616 NDE		205
2 15/16 *74,613*	**SNL 517**	1217 K	HA 217	FRB 16.5/150	TSN 517 L	ASNH 517	125
		2217 K	HA 317	FRB 12.5/150	TSN 517 A		125
		22217 EK	HA 317	FRB 12.5/150	TSN 517 C		125
		BS2-2217-2CSK	HA 317 E	FRB 8.5/150	TSNA 517 SA		143
		C 2217 K	HA 317 E	FRB 12.5/150	TSN 517 NDA		210
	SNL 520-617	1317 K	HA 317	FRB 14.5/180	TSN 617 L	ASNH 520-617	160
		2317 K	HA 2317	FRB 5/180	TSN 617 A		160
		21317 EK	HA 317	FRB 14.5/180	TSN 617 C		160
		22317 EK	HA 2317	FRB 5/180	TSN 617 SA		178
		C 2317 K	HA 2317	FRB 5/180	TSN 617 NDA		220

[1] Only the basic bearing designation is listed. Other bearing variants can also fit the housing. 12(00), 22(00), 13(00), self-aligning ball bearings, 222(00), 213(00), BS2...– spherical roller bearings, C... – CARB toroidal roller bearing
[2] The adapter sleeve fits the bearing in the same line only. Other adapter sleeve variants can also be used.
[3] The locating ring fits the bearing in the same line only. Two locating rings are required for each housing.

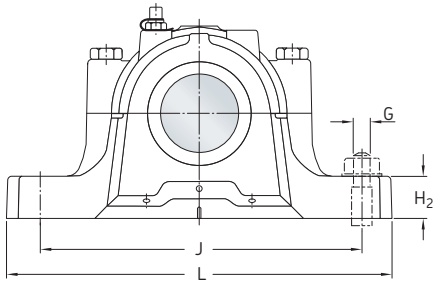

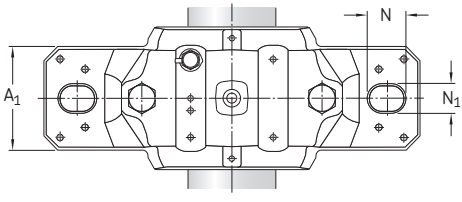

Shaft diameter	Dimensions													Mass Housing
d_a	A	A_1	C_a	D_a	H	H_1	H_2	J	L	N	N_1	G	G	
in./*mm*	mm												in.	kg
2 11/16 *68,263*	120	90	58	140	177	95	32	260	315	28	22	20	3/4	9,50
	145	100	68	170	212	112	35	290	345	28	22	20	3/4	13,7
2 3/4 *69,85*	120	90	58	140	177	95	32	260	315	28	22	20	3/4	9,50
	145	100	68	170	212	112	35	290	345	28	22	20	3/4	13,7
2 15/16 *74,613*	125	90	61	150	183	95	32	260	320	28	22	20	3/4	10,0
	160	110	70	180	218	112	40	320	380	32	26	24	7/8	17,6

2.2 SNL and SE plummer block housings for bearings on an adapter sleeve, inch shafts

d_a **3 – 3 1/4** in.
76,2 – 82,55 mm

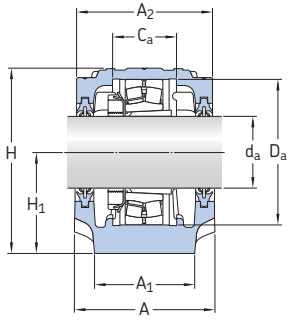

with TSN .. L

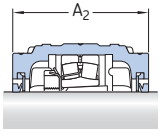

with TSN .. A

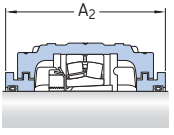

with TSN .. S

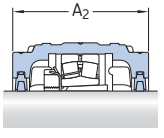

with TSN .. C

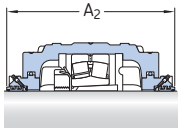

with TSN .. ND

Shaft diameter d_a	**Housing**	**Appropriate parts** Bearing[1]	Adapter sleeve[2]	Locating ring[3]	Seals	End cover	Width incl. seals A_2
in./*mm*	–	–					mm
3 *76,2*	**SNL 517**	1217 K	HE 217	FRB 16.5/150	TSN 517 L	ASNH 517	125
		2217 K	HE 317	FRB 12.5/150	TSN 517 A		125
		22217 EK	HE 317	FRB 12.5/150	TSN 517 C		125
		BS2-2217-2CSK	HE 317 E	FRB 8.5/150	TSN 517 SE		143
		C 2217 K	HE 317 E	FRB 12.5/150	TSN 517 NDE		210
	SNL 520-617	1317 K	H 317	FRB 14.5/180	TSN 617 L	ASNH 520-617	160
		2317 K	HE 2317	FRB 5/180	TSN 617 A		160
		21317 EK	H 317	FRB 14.5/180	TSN 617 C		160
		22317 EK	HE 2317	FRB 5/180	TSN 617 SE		178
		C 2317 K	HE 2317	FRB 5/180	TSN 617 NDE		220
3 3/16 *80,963*	**SNL 518-615**	1218 K	HA 218	FRB 17.5/160	TSN 518 L	ASNH 518-615	140
		2218 K	HA 318	FRB 12.5/160	TSN 518 A		140
		22218 EK	HA 318	FRB 12.5/160	TSN 518 CE		140
		BS2-2218-2CSK	HA 2318 E/L73	FRB 8.5/160	TSN 518 SA		158
		23218 CCK/W33	HA 2318	FRB 6.25/160	TSN 518 NDA		225
		C 2218 K	HA 318 E	FRB 12.5/160			
3 1/4 *82,55*	**SNL 518-615**	1218 K	HE 218	FRB 17.5/160	TSN 518 A	ASNH 518-615	140
		2218 K	HE 318	FRB 12.5/160	TSN 518 CE		140
		22218 EK	HE 318	FRB 12.5/160	TSN 518 SE		158
		BS2-2218-2CSK	HE 2318 E/L73	FRB 8.5/160	TSN 518 NDE		225
		23218 CCK/W33	HE 2318	FRB 6.25/160			
		C 2218 K	HE 318 E	FRB 12.5/160			
	SNL 522-619	1319 K	HE 319	FRB 17.5/200	TSN 619 A	ASNH 522-619	175
		2319 KM	HE 2319	FRB 6.5/200	TSN 619 C		175
		21319 EK	HE 319	FRB 17.5/200	TSN 619 SE		191
		22319 EK	HE 2319	FRB 6.5/200	TSN 619 NDE		235
		C 2319 K	HE 2319	FRB 6.5/200			

[1] Only the basic bearing designation is listed. Other bearing variants can also fit the housing. 12(00), 22(00), 13(00), self-aligning ball bearings, 222(00), 213(00), BS2...– spherical roller bearings, C... – CARB toroidal roller bearing
[2] The adapter sleeve fits the bearing in the same line only. Other adapter sleeve variants can also be used.
[3] The locating ring fits the bearing in the same line only. Two locating rings are required for each housing.

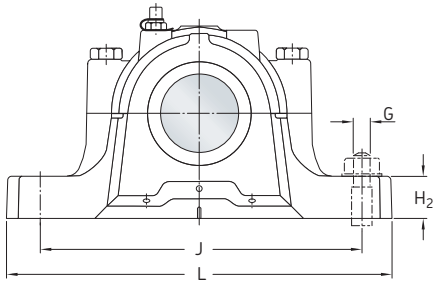

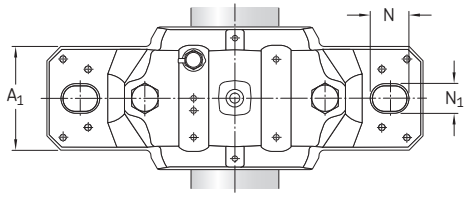

Shaft diameter	**Dimensions**													**Mass** Housing
d_a	A	A_1	C_a	D_a	H	H_1	H_2	J	L	N	N_1	G	G	
in./*mm*	mm												in.	kg
3 *76,2*	125	90	61	150	183	95	32	260	320	28	22	20	3/4	10,0
	160	110	70	180	218	112	40	320	380	32	26	24	7/8	17,6
3 3/16 *80,963*	140	100	65	160	194	100	35	290	345	28	22	20	3/4	12,5
3 1/4 *82,55*	140	100	65	160	194	100	35	290	345	28	22	20	3/4	12,5
	175	120	80	200	242	125	45	350	410	32	26	24	7/8	22,0

2.2 SNL and SE plummer block housings for bearings on an adapter sleeve, inch shafts

d_a **3 7/16 – 3 15/16** in.
87,313 – 100,012 mm

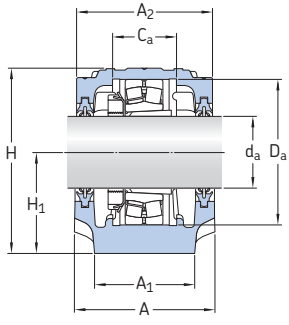

with TSN .. L

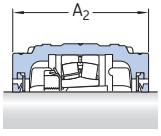

with TSN .. A

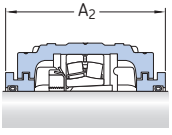

with TSN .. S

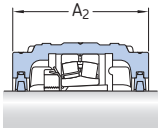

with TSN .. C

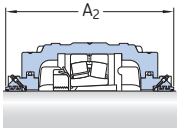

with TSN .. ND

Shaft diameter d_a	**Housing**	**Appropriate parts** Bearing[1]	Adapter sleeve[2]	Locating ring[3]	Seals	End cover	Width incl. seals A_2
in./*mm*	–	–					mm
3 7/16 *87,313*	**SNL 520-617**	1220 K 2220 KM 22220 EK BS2-2220-2CS5K 23220 CCK/W33 C 2220 K	HA 220 HA 320 HA 320 HA 2320 E HA 2320 HA 320 E	FRB 18/180 FRB 12/180 FRB 12/180 FRB 7.5/180 FRB 4.85/180 FRB 12/180	TSN 520 A TSN 520 C TSN 520 SA TSN 520 NDA	ASNH 520-617	160 160 178 230
	SNL 524-620	1320 K 2320 KM 21320 EK 22320 EK C 2320 K	HA 320 HA 2320 HA 320 HA 2320 HA 2320	FRB 19.5/215 FRB 6.5/215 FRB 19.5/215 FRB 6.5/215 FRB 6.5/215	TSN 620 A TSN 620 C TSN 620 SA TSN 620 NDA	ASNH 524-620	185 185 199 240
3 1/2 *88,9*	**SNL 520-617**	1220 K 2220 KM 22220 EK BS2-2220-2CS5K 23220 CCK/W33 C 2220 K	HE 220 HE 320 HE 320 HE 2320 E HE 2320 HE 320 E	FRB 18/180 FRB 12/180 FRB 12/180 FRB 7.5/180 FRB 4.85/180 FRB 12/180	TSN 520 A TSN 520 C TSN 520 SE TSN 520 NDE	ASNH 520-617	160 160 178 230
	SNL 524-620	1320 K 2320 KM 21320 EK 22320 EK C 2320 K	HE 320 HE 2320 HE 320 HE 2320 HE 2320	FRB 19.5/215 FRB 6.5/215 FRB 19.5/215 FRB 6.5/215 FRB 6.5/215	TSN 620 A TSN 620 C TSN 620 SE TSN 620 NDE	ASNH 524-620	185 185 199 240
3 15/16 *100,012*	**SNL 522-619**	1222 K 2222 KM 22222 EK BS2-2222-2CS5K 23222 CCK/W33 C 2222 K	H 222 H 322 H 322 H 2322 E H 2322 H 322 E	FRB 21/200 FRB 13.5/200 FRB 13.5/200 FRB 8.5/200 FRB 5.1/200 FRB 13.5/200	TSN 522 L TSN 522 A TSN 522 C TSN 522 SA TSN 522 NDA	ASNH 522-619	175 175 175 191 250

[1] Only the basic bearing designation is listed. Other bearing variants can also fit the housing. 12(00), 22(00), 13(00), self-aligning ball bearings, 222(00), 213(00), BS2...– spherical roller bearings, C... – CARB toroidal roller bearing
[2] The adapter sleeve fits the bearing in the same line only. Other adapter sleeve variants can also be used.
[3] The locating ring fits the bearing in the same line only. Two locating rings are required for each housing.

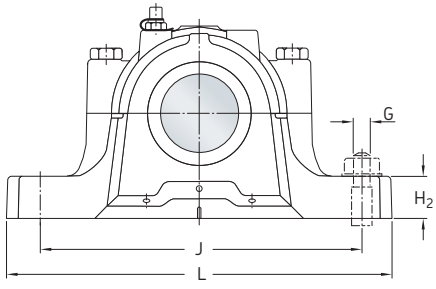

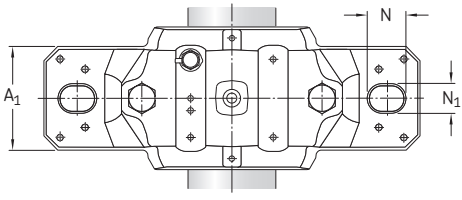

Shaft diameter	**Dimensions**													**Eye bolt** acc. to DIN 580	**Mass** Housing
d_a	A	A_1	C_a	D_a	H	H_1	H_2	J	L	N	N_1	G	G		
in./*mm*	mm												in.	–	kg
3 7/16 *87,313*	160	110	70	180	218	112	40	320	380	32	26	24	7/8	–	17,6
	185	120	86	215	271	140	45	350	410	32	26	24	7/8	M 10	26,2
3 1/2 *88,9*	160	110	70	180	218	112	40	320	380	32	26	24	7/8	–	17,6
	185	120	86	215	271	140	45	350	410	32	26	24	7/8	M 10	26,2
3 15/16 *100,012*	175	120	80	200	242	125	45	350	410	32	26	24	7/8	–	22,0

2.2 SNL and SE plummer block housings for bearings on an adapter sleeve, inch shafts

d_a **4 – 4 1/2** in.
101,6 – 114,3 mm

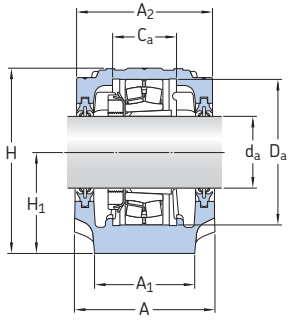

with TSN .. L

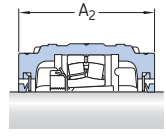

with TSN .. A

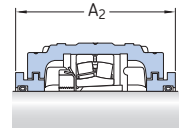

with TSN .. S

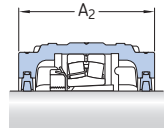

with TSN .. C

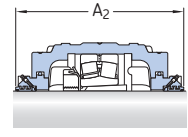

with TSN .. ND

Shaft diameter d_a	**Housing**	**Appropriate parts** Bearing[1]	Adapter sleeve[2]	Locating ring[3]	Seals	End cover	Width incl. seals A_2
in./*mm*	–	–					mm
4 *101,6*	**SNL 522-619**	1222 K 2222 KM 22222 EK BS2-2222-2CS5K 23222 CCK/W33 C 2222 K	HE 222 HE 322 HE 322 HE 2322 E HE 2322 HE 322 E	FRB 21/200 FRB 13.5/200 FRB 13.5/200 FRB 8.5/200 FRB 5.1/200 FRB 13.5/200	TSN 522 L TSN 522 A TSN 522 C TSN 522 SE TSN 522 NDE	ASNH 522-619	175 175 175 191 250
4 3/16 *106,363*	**SNL 524-620**	1224 KM 22224 EK BS2-2224-2CS5K 23224 CCK/W33 C 3224 K	HA 3024 HA 3124 HA 2324 EH HA 2324 HA 2324 L	FRB 22/215 FRB 14/215 FRB 8.5/215 FRB 5/215 FRB 5/215	TSN 524 A TSN 524 CE TSN 524 SA TSN 524 NDA	ASNH 524-620	185 185 199 260
4 1/4 *107,95*	**SNL 524-620**	1224 KM 22224 EK BS2-2224-2CS5K 23224 CCK/W33 C 2224 K C 3224 K	HE 3024 HE 3124 HE 2324 EH HE 2324 HE 3124 L HE 2324 L	FRB 22/215 FRB 14/215 FRB 8.5/215 FRB 5/215 FRB 14/215 FRB 5/215	TSN 524 A TSN 524 C TSN 524 SE TSN 524 NDE	ASNH 524-620	185 815 199 260
4 7/16 *112,713*	**SNL 526**	22226 EK BS2-2226-2CS5K 23226 CCK/W33 23226-2CS5K C 2226 K	HA 3126 HA 2326 L HA 2326 HA 2326 HA 3126 L	FRB 13/230 FRB 7.5/230 FRB 5/230 FRB 5/230 FRB 13/230	TSN 526 A TSN 526 C TSN 526 SA TSN 526 NDA	ASNH 526	190 190 208 265
4 1/2 *114,3*	**SNL 526**	22226 EK BS2-2226-2CS5K 23226 CCK/W33 23226-2CS5K C 2226 K	HE 3126 HE 2326 L HE 2326 HE 2326 HE 3126 L	FRB 13/230 FRB 7.5/230 FRB 5/230 FRB 5/230 FRB 13/230	TSN 526 L TSN 526 A TSN 526 C TSN 526 SE TSN 526 NDE	ASNH 526	190 190 190 208 265

[1] Only the basic bearing designation is listed. Other bearing variants can also fit the housing. 12(00), 22(00), 13(00), self-aligning ball bearings, 222(00), 213(00), BS2...– spherical roller bearings, C... – CARB toroidal roller bearing
[2] The adapter sleeve fits the bearing in the same line only. Other adapter sleeve variants can also be used.
[3] The locating ring fits the bearing in the same line only. Two locating rings are required for each housing.

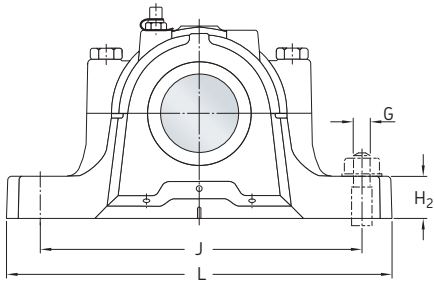

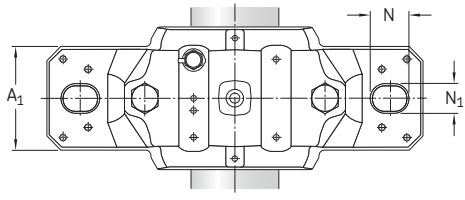

Shaft diameter	**Dimensions**													**Eye bolt** acc. to DIN 580	**Mass** Housing
d_a	A	A_1	C_a	D_a	H	H_1	H_2	J	L	N	N_1	G	G		
in./*mm*	mm												in.	–	kg
4 *101,6*	175	120	80	200	242	125	45	350	410	32	26	24	7/8	–	22,0
4 3/16 *106,363*	185	120	86	215	271	140	45	350	410	32	26	24	7/8	M 10	26,2
4 1/4 *107,95*	185	120	86	215	271	140	45	350	410	32	26	24	7/8	M 10	26,2
4 7/16 *112,713*	190	130	90	230	290	150	50	380	445	35	28	24	1	M 10	33,0
4 1/2 *114,3*	190	130	90	230	290	150	50	380	445	35	28	24	1	M 10	33,0

2.2 SNL and SE plummer block housings for bearings on an adapter sleeve, inch shafts

d_a **4 15/16 – 5 1/2** in.
125,413 – 139,7 mm

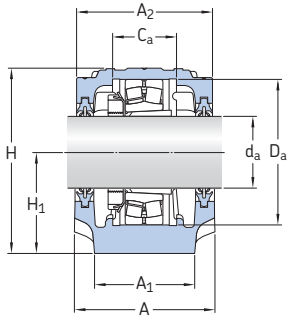

with TSN .. L

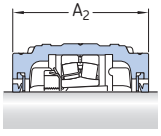

with TSN .. A

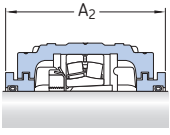

with TSN .. S

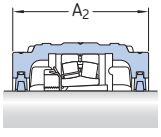

with TSN .. C

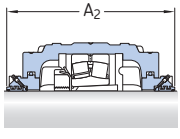

with TSN .. ND

Shaft diameter d_a	**Housing**	**Appropriate parts** Bearing[1]	Adapter sleeve[2]	Locating ring[3]	Seals	End cover	Width incl. seals A_2
in./*mm*	–	–					mm
4 15/16 *125,413*	**SNL 528**	22228 CCK/W33 22228-2CS5K 23228 CCK/W33 23228-2CS5K C 2228 K	HA 3128 HA 3128 L HA 2328 HA 2328 HA 3128 L	FRB 15/250 FRB 15/250 FRB 5/250 FRB 5/250 FRB 15/250	TSN 528 L TSN 528 A TSN 528 C TSN 528 SA TSN 528 NDA	ASNH 528	205 205 205 223 285
5 *127*	**SNL 528**	22228 CCK/W33 22228-2CS5K 23228 CCK/W33 23228-2CS5K C 2228 K	HE 3128 HA 3128 L HE 2328 HA 2328 HE 3128 L	FRB 15/250 FRB 15/250 FRB 5/250 FRB 5/250 FRB 15/250	TSN 528 A TSN 528 C TSN 528 SE TSN 528 NDE	ASNH 528	205 205 223 285
5 3/16 *131,763*	**SNL 530**	22230 CCK/W33 22230-2CS5K 23230 CCK/W33 23230-2CS5K C 2230 K	HA 3130 HA 3130 HA 2330 HA 2330 HA 3130 L	FRB 16.5/270 FRB 16.5/270 FRB 5/270 FRB 5/270 FRB 16.5/270	TSN 530 A TSN 530 C TSN 530 SA TSN 530 NDA	ASNH 530	220 220 241 295
5 1/4 *133,35*	**SNL 530**	22230 CCK/W33 22230-2CS5K 23230 CCK/W33 23230-2CS5K C 2230 K	HE 3130 HE 3130 HE 2330 HE 2330 HE 3130 L	FRB 16.5/270 FRB 16.5/270 FRB 5/270 FRB 5/270 FRB 16.5/270	TSN 530 A TSN 530 C TSN 530 SE TSN 530 NDE	ASNH 530	220 220 241 295
5 7/16 *138,113*	**SNL 532**	22232 CCK/W33 22232-2CS5K 23232 CCK/W33 C 3232 K	HA 3132 HA 3132 HA 2332 HA 2332 L	FRB 17/290 FRB 17/290 FRB 5/290 FRB 5/290	TSN 532 A TSN 532 C TSN 532 SA TSN 532 NDA	ASNH 532	235 235 254 315
5 1/2 *139,7*	**SNL 532**	22232 CCK/W33 22232-2CS5K 23232 CCK/W33 C 3232 K	HE 3132 HE 3132 HE 2332 HE 2332 L	FRB 17/290 FRB 17/290 FRB 5/290 FRB 5/290	TSN 532 L TSN 532 A TSN 532 C TSN 532 SE TSN 532 NDE	ASNH 532	235 235 235 254 315

[1] Only the basic bearing designation is listed. Other bearing variants can also fit the housing. 12(00), 22(00), 13(00), self-aligning ball bearings, 222(00), 213(00), BS2...– spherical roller bearings, C... – CARB toroidal roller bearing
[2] The adapter sleeve fits the bearing in the same line only. Other adapter sleeve variants can also be used.
[3] The locating ring fits the bearing in the same line only. Two locating rings are required for each housing.

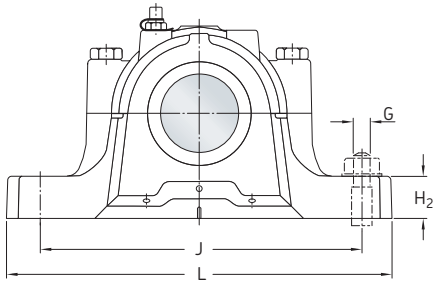

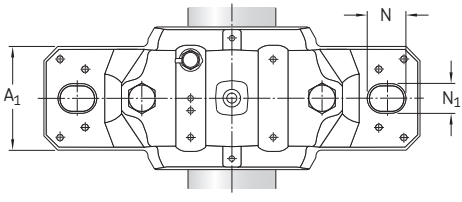

Shaft diameter	**Dimensions**													**Eye bolt** acc. to DIN 580	**Mass** Housing
d_a	A	A_1	C_a	D_a	H	H_1	H_2	J	L	N	N_1	G	G		
in./*mm*	mm												in.	–	kg
4 15/16 *125,413*	205	150	98	250	302	150	50	420	500	42	35	30	1 1/4	M 12	40,0
5 *127*	205	150	98	250	302	150	50	420	500	42	35	30	1 1/4	M 12	40,0
5 3/16 *131,763*	220	160	106	270	323	160	60	450	530	42	35	30	1 1/4	M 12	49,0
5 1/4 *133,35*	220	160	106	270	323	160	60	450	530	42	35	30	1 1/4	M 12	49,0
5 7/16 *138,113*	235	160	114	290	344	170	60	470	550	42	35	30	1 1/4	M 12	55,0
5 1/2 *139,7*	235	160	114	290	344	170	60	470	550	42	35	30	1 1/4	M 12	55,0

2.3 SNL and SE plummer block housings for bearings on a cylindrical seat
d **25 – 30** mm

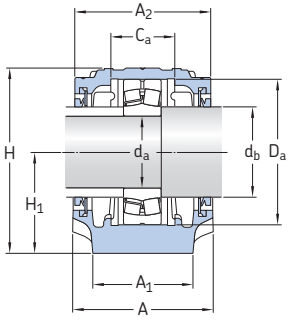

with TSN .. A

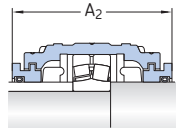

with TSN .. S

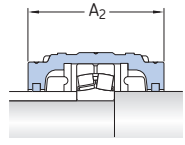

with FS 170

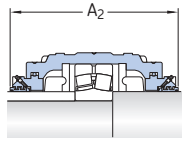

with TSN .. ND

Shaft diameter d_a	Housing	Appropriate parts Bearing[1]	Locating ring[2]	Seals	End cover	Width incl. seals A_2
mm	–	–				mm
25	**SNL 205**	1205 ETN9 2205 ETN9 22205 E BS2-2205-2CS C 2205 TN9	FRB 5/52 FRB 3.5/52 FRB 3.5/52 FRB 1/52 FRB 3.5/52	TSN 205 S TSN 205 ND	ASNH 505-605	90 140
	SNL 505	1205 ETN9 2205 ETN9 22205 E BS2-2205-2CS C 2205 TN9	FRB 5/52 FRB 3.5/52 FRB 3.5/52 FRB 1/52 FRB 3.5/52	2 FS 170	ASNH 505	67
	SNL 206-305	1305 ETN9 21305 CC 2305 ETN9	FRB 7.5/62 FRB 7.5/62 FRB 4/62	TSN 305 A TSN 305 S TSN 305 ND	ASNH 507-606	77 89 140
30	**SNL 206-305**	1206 ETN9 2206 ETN9 22206 E BS2-2206-2CS C 2206 TN9	FRB 8/62 FRB 6/62 FRB 6/62 FRB 3.5/62 FRB 6/62	TSN 206 A TSN 206 S TSN 206 ND	ASNH 507-606	77 89 150
	SNL 506-605	1206 ETN9 2206 ETN9 22206 E BS2-2206-2CS C 2206 TN9	FRB 8/62 FRB 6/62 FRB 6/62 FRB 3.5/62 FRB 6/62	2 FS 170	ASNH 506-605	77
	SE 507-606	1306 ETN9 21306 CC 2306	FRB 7.5/72 FRB 7.5/72 FRB 3.5/72	TSN 306 A TSN 306 S TSN 306 ND	ASNH 507-606	82 94 155

[1] Only the basic bearing designation is listed. Other bearing variants can also fit the housing. 12(00), 22(00), 13(00) – self-aligning ball bearings, 222(00), 213(00), BS2... – spherical roller bearings, C... – CARB toroidal roller bearing
[2] The locating ring fits the bearing in the same line only. Two locating rings are required for each housing.

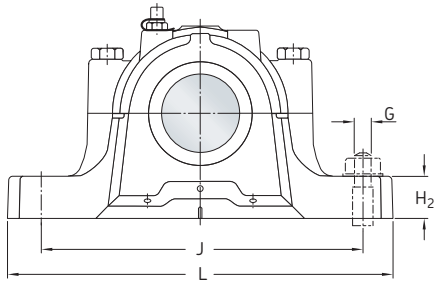

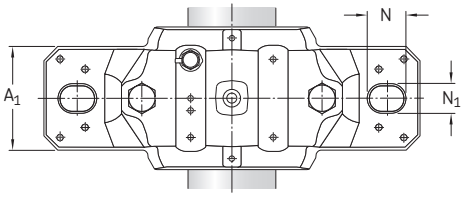

Shaft diameter		Dimensions												Mass Housing
d_a	d_b	A	A_1	C_a	D_a	H	H_1	H_2	J	L	N	N_1	G	
mm		mm												kg
25	30	67	46	25	52	74	40	19	130	165	20	15	12	1,40
	30	67	46	25	52	74	40	19	130	165	20	15	12	1,40
	30	77	52	32	62	89	50	22	150	185	20	15	12	1,90
30	35	77	52	32	62	89	50	22	150	185	20	15	12	1,90
	35	77	52	32	62	89	50	22	150	185	20	15	12	1,90
	35	83	52	34	72	94	50	22	150	185	20	15	12	2,60

2.3 SNL and SE plummer block housings for bearings on a cylindrical seat
d **35 – 40** mm

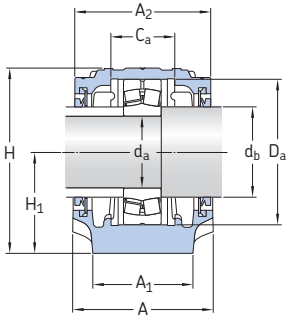

with TSN .. A

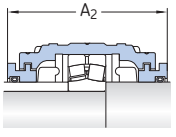

with TSN .. S

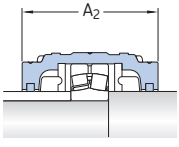

with FS 170

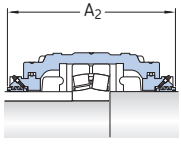

with TSN .. ND

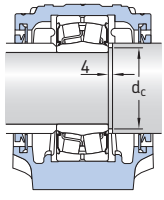

Shaft diameter d_a	Housing	Appropriate parts Bearing[1]	Locating ring[2]	Seals	End cover	Width incl. seals A_2
mm	–	–				mm
35	**SE 207**	1207 E 2207 ETN9 22207 E BS2-2207-2CS[3] C 2207 TN9	FRB 8.5/72 FRB 5.5/72 FRB 5.5/72 FRB 3/72 FRB 5.5/72	TSN 207 A TSN 207 S TSN 207 ND	ASNH 509	82 96 160
	SE 507-606	1207 E 2207 ETN9 22207 E BS2-2207-2CS[3] C 2207 TN9	FRB 8.5/72 FRB 5.5/72 FRB 5.5/72 FRB 3/72 FRB 5.5/72	4 FS 170	ASNH 507-606	82
	SE 208-307	1307 ETN9 2307 ETN9 21307 CC	FRB 9/80 FRB 4/80 FRB 9/80	TSN 307 A TSN 307 S TSN 307 ND	ASNH 510-608	85 99 145
40	**SE 208-307**	1208 ETN9 2208 ETN9 22208 E BS2-2208-2CS[3] C 2208 TN9	FRB 10.5/80 FRB 8/80 FRB 8/80 FRB 5.5/80 FRB 8/80	TSN 208 A TSN 208 S TSN 208 ND	ASNH 510-608	85 99 160
	SE 508-607	1208 ETN9 2208 ETN9 22208 E BS2-2208-2CS[3] C 2208 TN9	FRB 10.5/80 FRB 8/80 FRB 8/80 FRB 5.5/80 FRB 8/80	4 FS 170	ASNH 508-607	85
	SE 510-608	1308 ETN9 2308 ETN9 21308 E 22308 E BS2-2308-2CS[3]	FRB 9/90 FRB 4/90 FRB 9/90 FRB 4/90 FRB 1.5/90	TSN 308 A TSN 308 S TSN 308 ND	ASNH 510-608	90 102 167

[1] Only the basic bearing designation is listed. Other bearing variants can also fit the housing. 12(00), 22(00), 13(00) – self-aligning ball bearings, 222(00), 213(00), BS2... – spherical roller bearings, C... – CARB toroidal roller bearing
[2] The locating ring fits the bearing in the same line only. Two locating rings are required for each housing.
[3] The shaft must be modified according to the d_c value for the bearing.

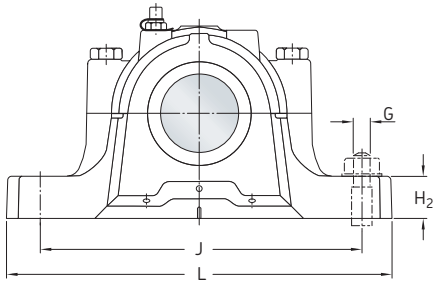

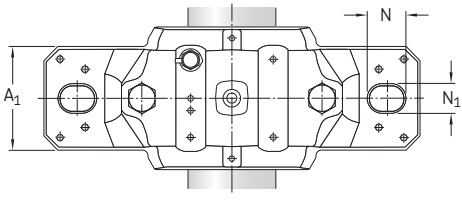

Shaft diameter				Dimensions												Mass Housing
d_a	d_b	d_c[1] min	d_c[1] max	A	A_1	C_a	D_a	H	H_1	H_2	J	L	N	N_1	G	
mm				mm												kg
35	45			83	52	34	72	94	50	22	150	185	20	15	12	2,45
		42	43													
	45			83	52	34	72	94	50	22	150	185	20	15	12	2,60
		42	43													
	45	–	–	85	60	39	80	108	60	25	170	205	20	15	12	3,30
40	50			85	60	39	80	108	60	25	170	205	20	15	12	3,30
		47	47													
	50			85	60	39	80	108	60	25	170	205	20	15	12	3,40
		47	47													
	50			90	60	41	90	114	60	25	170	205	20	15	12	3,85
		47,5	47,5													

[1] Valid for some sealed spherical roller bearings only.

2.3 SNL and SE plummer block housings for bearings on a cylindrical seat
d_a **45 – 50** mm

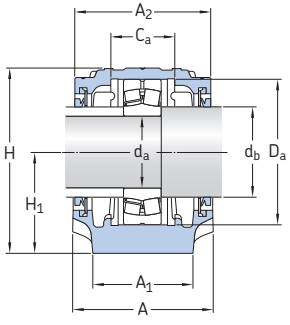

with TSN .. A

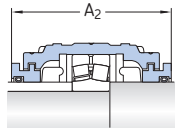

with TSN .. S

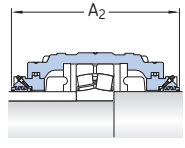

with TSN .. ND

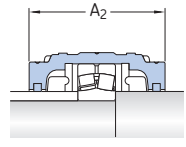

with FS 170

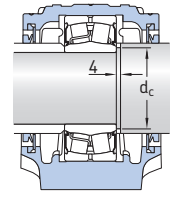

Shaft diameter d_a	Housing	Appropriate parts Bearing[1]	Locating ring[2]	Seals	End cover	Width incl. seals A_2
mm	–	–				mm
45	**SE 209**	1209 ETN9 2209 ETN9 22209 E BS2-2209-2CS[3] C 2209 TN9	FRB 5.5/85 FRB 3.5/85 FRB 3.5/85 FRB 1/85 FRB 3.5/85	TSN 209 A TSN 209 S TSN 209 ND	ASNH 511-609	85 97 160
	SE 509	1209 ETN9 2209 ETN9 22209 E BS2-2209-2CS[3] C 2209 TN9	FRB 5.5/85 FRB 3.5/85 FRB 3.5/85 FRB 1/85 FRB 3.5/85	4 FS 170	ASNH 509	85
	SE 511-609	1309 ETN9 2309 ETN9 21309 E 22309 E	FRB 9.5/100 FRB 4/100 FRB 9.5/100 FRB 4/100	TSN 309 A TSN 309 S TSN 309 ND	ASNH 511-609	95 107 172
50	**SE 210**	1210 ETN9 2210 ETN9 22210 E BS2-2210-2CS[3] C 2210 TN9	FRB 10.5/90 FRB 9/90 FRB 9/90 FRB 6.5/90 FRB 9/90	TSN 210 A TSN 210 S TSN 210 ND	ASNH 512-610	90 102 165
	SE 510-608	1210 ETN9 2210 ETN9 22210 E BS2-2210-2CS[3] C 2210 TN9	FRB 10.5/90 FRB 9/90 FRB 9/90 FRB 6.5/90 FRB 9/90	4 FS 170	ASNH 510-608	90
	SE 512-610	1310 ETN9 2310 21310 E 22310 E	FRB 10.5/110 FRB 4/110 FRB 10.5/110 FRB 4/110	TSN 310 A TSN 310 S TSN 310 ND	ASNH 512-610	105 117 180

[1] Only the basic bearing designation is listed. Other bearing variants can also fit the housing. 12(00), 22(00), 13(00) – self-aligning ball bearings, 222(00), 213(00), BS2... – spherical roller bearings, C... – CARB toroidal roller bearing
[2] The locating ring fits the bearing in the same line only. Two locating rings are required for each housing.
[3] The shaft must be modified according to the d_c value for the bearing.

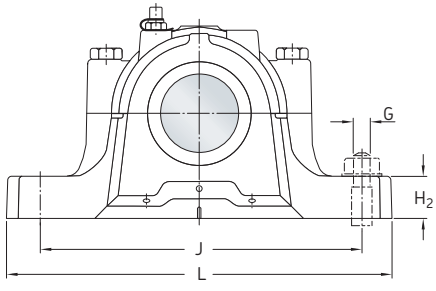

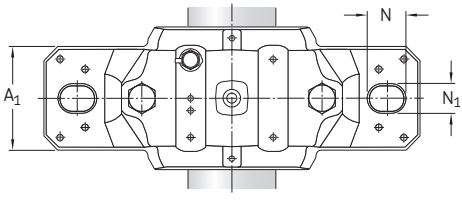

Shaft diameter				Dimensions												Mass Housing
d_a	d_b	d_c[1) min	d_c[1) max	A	A_1	C_a	D_a	H	H_1	H_2	J	L	N	N_1	G	
mm				mm												kg
45	55			85	60	30	85	109	60	25	170	205	20	15	12	3,20
		52	53													
	55			85	60	30	85	109	60	25	170	205	20	15	12	3,40
		52	53													
	55	–	–	95	70	44	100	129	70	28	210	255	24	18	16	5,45
50	60			90	60	41	90	114	60	25	170	205	20	15	12	3,65
		57	58													
	60			90	60	41	90	114	60	25	170	205	20	15	12	3,85
		57	58													
	60	–	–	105	70	48	110	134	70	30	210	255	24	18	16	6,15

1) Valid for some sealed spherical roller bearings only.

2.3 SNL and SE plummer block housings for bearings on a cylindrical seat
d_a 55 – 60 mm

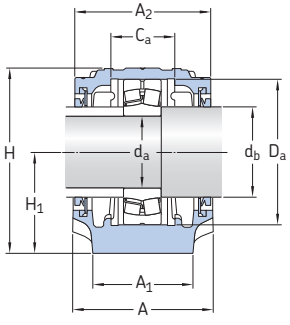

with TSN .. A

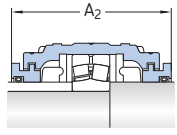

with TSN .. S

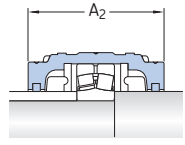

with FS 170

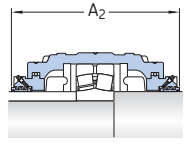

with TSN .. ND

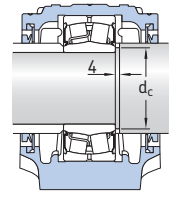

Shaft diameter d_a	Housing	Appropriate parts Bearing[1]	Locating ring[2]	Seals	End cover	Width incl. seals A_2
mm	–	–				mm
55	**SE 211**	1211 ETN9 2211 ETN9 22211 E BS2-2211-2CS[3] C 2211 TN9	FRB 11.5/100 FRB 9.5/100 FRB 9.5/100 FRB 6.5/100 FRB 9.5/100	TSN 211 A TSN 211 S TSN 211 ND	ASNH 513-611	95 107 170
	SE 511-609	1211 ETN9 2211 ETN9 22211 E BS2-2211-2CS[3] C 2211 TN9	FRB 11.5/100 FRB 9.5/100 FRB 9.5/100 FRB 6.5/100 FRB 9.5/100	4 FS 170	ASNH 511-609	95
	SE 513-611	1311 ETN9 2311 21311 E 22311 E BS2-2311-2CS	FRB 11/120 FRB 4/120 FRB 11/120 FRB 4/120 FRB 1/120	TSN 311 A TSN 311 S TSN 311 ND	ASNH 513-611	110 122 185
60	**SE 212**	1212 ETN9 2212 ETN9 22212 E BS2-2212-2CS[3] C 2212 TN9	FRB 13/110 FRB 10/110 FRB 10/110 FRB 7/110 FRB 10/110	TSN 212 A TSN 212 S TSN 212 ND	ASNH 515-612	105 117 185
	SE 512-610	1212 ETN9 2212 ETN9 22212 E BS2-2212-2CS[3] C 2212 TN9	FRB 13/110 FRB 10/110 FRB 10/110 FRB 7/110 FRB 10/110	4 FS 170	ASNH 512-610	105
	SE 515-612	1312 ETN9 2312 21312 E 22312 E	FRB 12.5/130 FRB 5/130 FRB 12.5/130 FRB 5/130	TSN 312 A TSN 312 S TSN 312 ND	ASNH 515-612	115 127 197

[1] Only the basic bearing designation is listed. Other bearing variants can also fit the housing. 12(00), 22(00), 13(00) – self-aligning ball bearings, 222(00), 213(00), BS2... – spherical roller bearings, C... – CARB toroidal roller bearing
[2] The locating ring fits the bearing in the same line only. Two locating rings are required for each housing.
[3] The shaft must be modified according to the d_c value for the bearing.

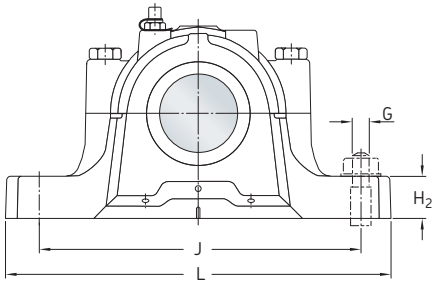

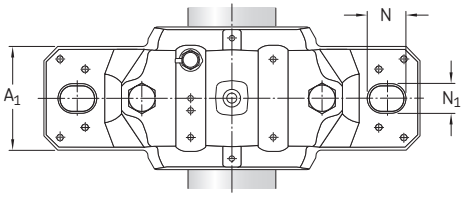

Shaft diameter				Dimensions												Mass Housing
d_a	d_b	d_c[1) min	d_c[1) max	A	A_1	C_a	D_a	H	H_1	H_2	J	L	N	N_1	G	
mm				mm												kg
55	65			95	70	44	100	129	70	28	210	255	24	18	16	5,85
		64	64													
	65			95	70	44	100	129	70	28	210	255	24	18	16	5,45
		64	64													
	65	–	–	110	80	51	120	150	80	30	230	275	24	18	16	7,90
60	70			105	70	48	110	134	70	30	210	255	24	18	16	5,80
		69	69													
	70			105	70	48	110	134	70	30	210	255	24	18	16	6,15
		69	69													
	70	–	–	115	80	56	130	156	80	30	230	280	24	18	16	8,55

1) Valid for some sealed spherical roller bearings only.

2.3 SNL and SE plummer block housings for bearings on a cylindrical seat
d **65 – 70** mm

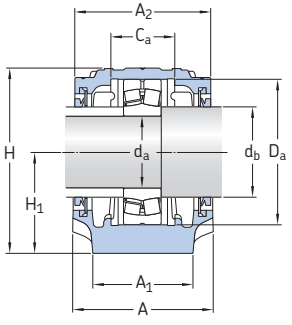

with TSN .. A

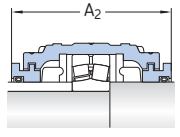

with TSN .. S

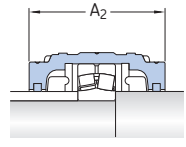

with FS 170

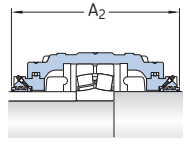

with TSN .. ND

Shaft diameter d_a	Housing	Appropriate parts Bearing[1]	Locating ring[2]	Seals	End cover	Width incl. seals A_2
mm	–	–				mm
65	**SE 213**	1213 ETN9 2213 ETN9 22213 E BS2-2213-2CS C 2213 TN9	FRB 14/120 FRB 10/120 FRB 10/120 FRB 6.5/120 FRB 10/120	TSN 213 A TSN 213 S TSN 213 ND	ASNH 516-613	110 128 190
	SE 513-611	1213 ETN9 2213 ETN9 22213 E BS2-2213-2CS C 2213 TN9	FRB 14/120 FRB 10/120 FRB 10/120 FRB 6.5/120 FRB 10/120	4 FS 170	ASNH 513-611	110
	SNL 516-613	1313 ETN9 2313 21313 E 22313 E	FRB 12.5/140 FRB 5/140 FRB 12.5/140 FRB 5/140	TSN 313 A TSN 313 S TSN 313 ND	ASNH 516-613	120 138 200
70	**SNL 517**	1314 2314 21314 E 22314 E	FRB 13/150 FRB 5/150 FRB 13/150 FRB 5/150	TSN 314 A TSN 314 S TSN 314 ND	ASNH 517	125 143 205

[1] Only the basic bearing designation is listed. Other bearing variants can also fit the housing. 12(00), 22(00), 13(00) – self-aligning ball bearings, 222(00), 213(00), BS2... – spherical roller bearings, C... – CARB toroidal roller bearing
[2] The locating ring fits the bearing in the same line only. Two locating rings are required for each housing.

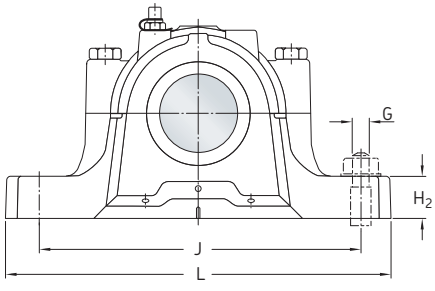

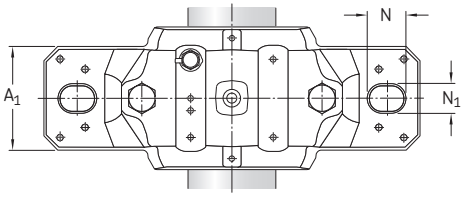

Shaft diameter		Dimensions												Mass Housing
d_a	d_b	A	A_1	C_a	D_a	H	H_1	H_2	J	L	N	N_1	G	
mm		mm												kg
65	75	110	80	51	120	150	80	30	230	275	24	18	16	7,45
	75	110	80	51	120	150	80	30	230	275	24	18	16	7,90
	75	120	90	58	140	177	95	32	260	315	28	22	20	9,50
70	80	125	90	61	150	183	95	32	260	320	28	22	20	10,0

2.3 SNL and SE plummer block housings for bearings on a cylindrical seat
d **75 – 80** mm

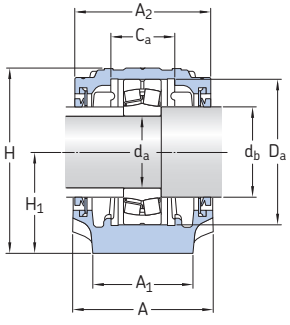

with TSN .. A

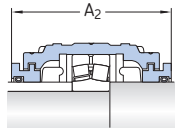

with TSN .. S

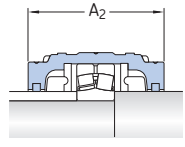

with FS 170

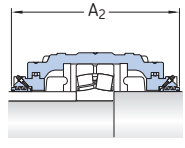

with TSN .. ND

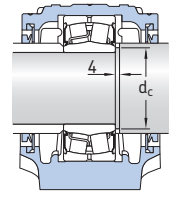

Shaft diameter d_a	Housing	Appropriate parts Bearing[1]	Locating ring[2]	Seals	End cover	Width incl. seals A_2
mm	–	–				mm
75	**SE 215**	1215 2215 ETN9 22215 E BS2-2215-2CS[3] C 2215	FRB 15.5/130 FRB 12.5/130 FRB 12.5/130 FRB 9/130 FRB 12.5/130	TSN 215 A TSN 215 S TSN 215 ND	ASNH 518-615	115 133 195
	SE 515-612	1215 2215 ETN9 22215 E BS2-2215-2CS[3] C 2215	FRB 15.5/130 FRB 12.5/130 FRB 12.5/130 FRB 9/130 FRB 12.5/130	4 FS 170	ASNH 515-612	115
	SNL 518-615	1315 2315 21315 E 22315 E C 2315	FRB 14/160 FRB 5/160 FRB 14/160 FRB 5/160 FRB 5/160	TSN 315 A TSN 315 S TSN 315 ND	ASNH 518-615	140 158 220
80	**SNL 216**	1216 2216 ETN9 22216 E BS2-2216-2CS C 2216	FRB 16/140 FRB 12.5/140 FRB 12.5/140 FRB 9/140 FRB 12.5/140	TSN 216 A TSN 216 S TSN 216 ND	ASNH 216	120 138 200
	SNL 516-613	1216 2216 ETN9 22216 E BS2-2216-2CS C 2216	FRB 16/140 FRB 12.5/140 FRB 12.5/140 FRB 9/140 FRB 12.5/140	4 FS 170	ASNH 516-613	120
	SNL 519-616	1316 2316 21316 E 22316 E C 2316	FRB 14.5/170 FRB 5/170 FRB 14.5/170 FRB 5/170 FRB 5/170	TSN 316 A TSN 316 S TSN 316 ND	ASNH 519-616	145 163 218

[1] Only the basic bearing designation is listed. Other bearing variants can also fit the housing. 12(00), 22(00), 13(00) –self-aligning ball bearings, 222(00), 213(00), BS2... – spherical roller bearings, C... – CARB toroidal roller bearing
[2] The locating ring fits the bearing in the same line only. Two locating rings are required for each housing.
[3] The shaft must be modified according to the d_c value for the bearing.

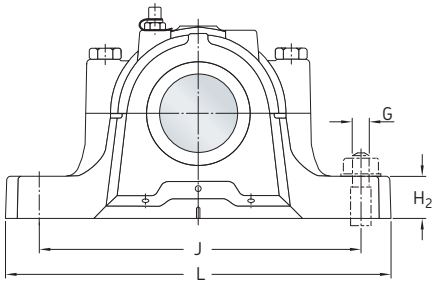

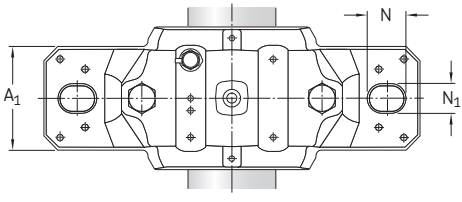

Shaft diameter				Dimensions												Mass Housing
d_a	d_b	d_c[1) min	d_c[1) max	A	A_1	C_a	D_a	H	H_1	H_2	J	L	N	N_1	G	
mm				mm												kg
75	85			115	80	56	130	156	80	30	230	280	24	18	16	8,10
		84	84													
	85			115	80	56	130	156	80	30	230	280	24	18	16	8,60
		84	84													
	85	–	–	140	100	65	160	194	100	35	290	345	28	22	20	12,5
80	90	–	–	120	90	58	140	177	95	32	260	315	28	22	20	9,00
	90	–	–	120	90	58	140	177	95	32	260	315	28	22	20	9,00
	90	–	–	145	100	68	170	212	112	35	290	345	28	22	20	13,7

1) Valid for some sealed spherical roller bearings only.

2.3 SNL and SE plummer block housings for bearings on a cylindrical seat
d **85 – 90** mm

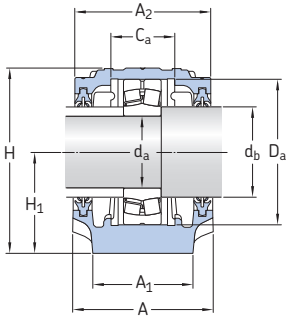

with TSN .. L

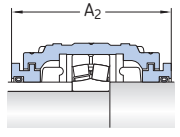

with TSN .. S

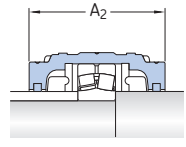

with FS 170

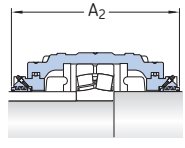

with TSN .. ND

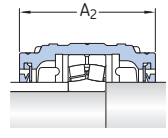

with TSN .. A

Shaft diameter d_a	Housing	Appropriate parts Bearing[1]	Locating ring[2]	Seals	End cover	Width incl. seals A_2
mm	–	–				mm
85	**SNL 217**	1217 2217 22217 E BS2-2217-2CS C 2217	FRB 16.5/150 FRB 12.5/150 FRB 12.5/150 FRB 8.5/150 FRB 12.5/150	TSN 217 A TSN 217 S TSN 217 ND	ASNH 217	125 143 205
	SNL 517	1217 2217 22217 E BS2-2217-2CS C 2217	FRB 16.5/150 FRB 12.5/150 FRB 12.5/150 FRB 8.5/150 FRB 12.5/150	4 FS 170	ASNH 517	125
	SNL 520-617	1317 2317 21317 E 22317 E C 2317	FRB 14.5/180 FRB 5/180 FRB 14.5/180 FRB 5/180 FRB 5/180	TSN 317 A TSN 317 S TSN 317 ND	ASNH 520-617	160 178 238
90	**SNL 218**	1218 2218 22218 E 23218 CC/W33 BS2-2218-2CS C 2218	FRB 17.5/160 FRB 12.5/160 FRB 12.5/160 FRB 6.25/160 FRB 8.5/160 FRB 12.5/160	TSN 218 L TSN 218 A TSN 218 S TSN 218 ND	ASNH 218	140 140 158 220
	SNL 518-615	1218 2218 22218 E 23218 CC/W33 BS2-2218-2CS C 2218	FRB 17.5/160 FRB 12.5/160 FRB 12.5/160 FRB 6.25/160 FRB 8.5/160 FRB 12.5/160	4 FS 170	ASNH 518-615	140

[1] Only the basic bearing designation is listed. Other bearing variants can also fit the housing. 12(00), 22(00), 13(00) –self-aligning ball bearings, 222(00), 213(00), BS2... – spherical roller bearings, C... – CARB toroidal roller bearing
[2] The locating ring fits the bearing in the same line only. Two locating rings are required for each housing.

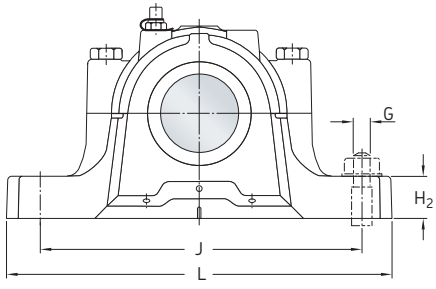

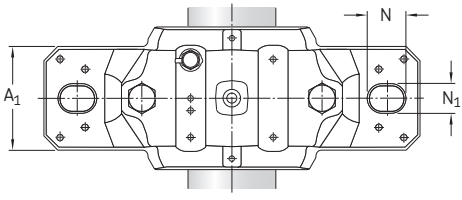

Shaft diameter		Dimensions												Mass Housing
d_a	d_b	A	A_1	C_a	D_a	H	H_1	H_2	J	L	N	N_1	G	
mm		mm												kg
85	95	125	90	61	150	183	95	32	260	320	28	22	20	9,50
	95	125	90	61	150	183	95	32	260	320	28	22	20	9,50
	95	160	110	70	180	218	112	40	320	380	32	26	24	17,6
90	100	140	100	65	160	194	100	35	290	345	28	22	20	11,8
	100	140	100	65	160	194	100	35	290	345	28	22	20	11,8

2.3 SNL and SE plummer block housings for bearings on a cylindrical seat
d **95 – 120** mm

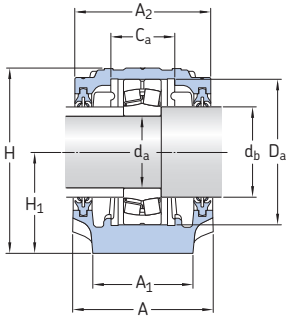

with TSN .. L

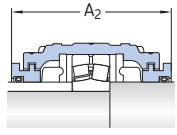

with TSN .. S

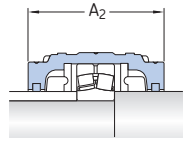

with FS 170

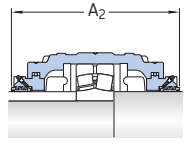

with TSN .. ND

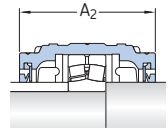

with TSN .. A

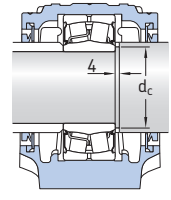

Shaft diameter d_a	Housing	Appropriate parts Bearing[1]	Locating ring[2]	Seals	End cover	Width incl. seals A_2
mm	–	–				mm
95	**SNL 522-619**	1319 2319 M 21319 E 22319 E C 2319	FRB 17.5/200 FRB 6.5/200 FRB 17.5/200 FRB 6.5/200 FRB 6.5/200	TSN 319 A TSN 319 S TSN 319 ND	ASNH 522-619	175 191 253
100	**SNL 520-617**	1220 2220 M 22220 E 23220 CC/W33 23220-2CS BS2-2220-2CS5[3] C 2220	FRB 18/180 FRB 12/180 FRB 12/180 FRB 4.85/180 FRB 4.85/180 FRB 7.5/180 FRB 12/180	TSN 220 L TSN 220 A TSN 220 S TSN 220 ND	ASNH 520-617	160 160 178 245
	SNL 524-620	1320 2320 M 21320 E 23220 CC/W33 C 2320	FRB 19.5/215 FRB 6.5/215 FRB 19.5/215 FRB 6.5/215 FRB 6.5/215	TSN 320 A TSN 320 S TSN 320 ND	ASNH 524-620	185 199 260
110	**SNL 522-619**	1222 2222 M 22222 E BS2-2222-2CS5 23222 CC/W33 C 2222	FRB 21/200 FRB 13.5/200 FRB 13.5/200 FRB 8.5/200 FRB 5.1/200 FRB 13.5/200	TSN 222 L TSN 222 A TSN 222 S TSN 222 ND	ASNH 522-619	175 175 191 255
120	**SNL 524-620**	1224 M 22224 E BS2-2224-2CS5 23224 CC/W33 C 3224	FRB 22/215 FRB 14/215 FRB 8.5/215 FRB 5/215 FRB 5/215	TSN 224 L TSN 224 A TSN 224 S TSN 224 ND	ASNH 524-620	185 185 199 270

[1] Only the basic bearing designation is listed. Other bearing variants can also fit the housing. 12(00), 22(00), 13(00) – self-aligning ball bearings, 222(00), 213(00), BS2... – spherical roller bearings, C... – CARB toroidal roller bearing
[2] The locating ring fits the bearing in the same line only. Two locating rings are required for each housing.
[3] The shaft must be modified according to the d_c value for the bearing.

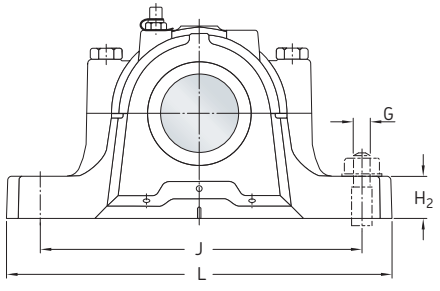

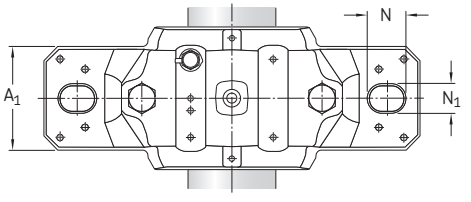

Shaft diameter				Dimensions											Eye bolt acc. to DIN 580	Mass Housing
d_a	d_b	d_c[1] min	d_c[1] max	A	A_1	C_a	D_a	H	H_1	H_2	J	L	N	N_1	G	
mm				mm											–	kg
95	110	–	–	175	120	80	200	242	125	45	350	410	32	26	24	–	22,0
100	115			160	110	70	180	218	112	40	320	380	32	26	24	–	17,6
		112	114														
	115	–	–	185	120	86	215	271	140	45	350	410	32	26	24	M 10	26,2
110	125	–	–	175	120	80	200	242	125	45	350	410	32	26	24	–	22,0
120	135	–	–	185	120	86	215	271	140	45	350	410	32	26	24	M 10	26,2

[1] Valid for some sealed spherical roller bearings only.

2.3 SNL and SE plummer block housings for bearings on a cylindrical seat
d **130 – 160** mm

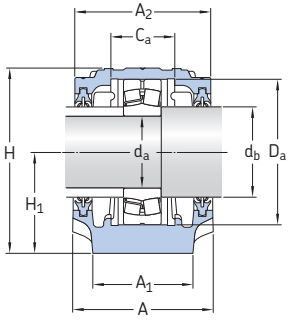

with TSN .. L

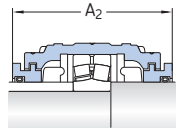

with TSN .. S

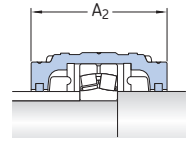

with FS 170

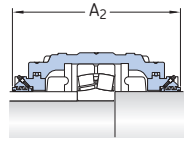

with TSN .. ND

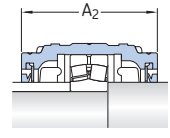

with TSN .. A

Shaft diameter d_a	Housing	Appropriate parts Bearing[1]	Locating ring[2]	Seals	End cover	Width incl. seals A_2
mm	–	–				mm
130	**SNL 526**	1226 M 22226 E BS2-2226-2CS5 23226 CC/W33 23226-2CS5 C 2226	FRB 22/230 FRB 13/230 FRB 7.5/230 FRB 5/230 FRB 5/230 FRB 13/230	TSN 226 L TSN 226 A TSN 226 S TSN 226 ND	ASNH 526	190 190 208 275
140	**SNL 528**	22228 CC/W33 22228-2CS5 23228 CC/W33 23228-2CS5 C 2228	FRB 15/250 FRB 15/250 FRB 5/250 FRB 5/250 FRB 15/250	TSN 228 L TSN 228 A TSN 228 S TSN 228 ND	ASNH 528	205 205 223 290
150	**SNL 530**	22230 CC/W33 22230-2CS5 23230 CC/W33 23230-2CS5 C 2230	FRB 16.5/270 FRB 16.5/270 FRB 5/270 FRB 5/270 FRB 16.5/270	TSN 230 L TSN 230 A TSN 230 S TSN 230 ND	ASNH 530	220 220 241 310
160	**SNL 532**	22232 CC/W33 22232-2CS5 23232 CC/W33 C 3232	FRB 17/290 FRB 17/290 FRB 5/290 FRB 5/290	TSN 232 A TSN 232 S TSN 232 ND	ASNH 532	235 254 325

[1] Only the basic bearing designation is listed. Other bearing variants can also fit the housing. 12(00), 22(00), 13(00) – self-aligning ball bearings, 222(00), 213(00), BS2... – spherical roller bearings, C... – CARB toroidal roller bearing
[2] The locating ring fits the bearing in the same line only. Two locating rings are required for each housing.

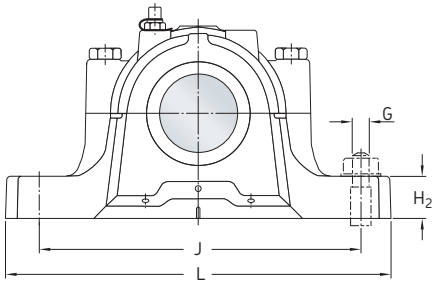

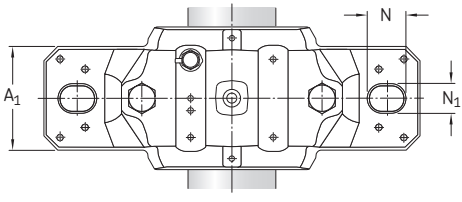

Shaft diameter		**Dimensions**												**Eye bolt** acc. to DIN 580	**Mass** Housing
d_a	d_b	A	A_1	C_a	D_a	H	H_1	H_2	J	L	N	N_1	G		
mm		mm												–	kg
130	145	190	130	90	230	290	150	50	380	445	35	28	24	M 10	33,0
140	155	205	150	98	250	302	150	50	420	500	42	35	30	M 12	40,0
150	165	220	160	106	270	323	160	60	450	530	42	35	30	M 12	49,0
160	175	235	160	114	290	344	170	60	470	550	42	35	30	M 12	55,0



Split plummer block housings SE 2, 3, 5 and 6 series

Bearing types
- Self-aligning ball bearings
- Spherical roller bearings
- CARB toroidal roller bearings

Bearing dimension series
- 02, 03, 22, 23, 32

Shaft diameter range
- 25 to 75 mm
- 15/16 to 2 1/2 in.

Typical shaft-bearing combinations
- Plain shaft with bearing on an adapter sleeve
- Stepped shaft with bearing on a cylindrical seat

Seals
- Four-lip
- Labyrinth
- Felt
- V-ring
- Heavy-duty

Lubrication
- Grease

Materials
- Grey cast iron
- Spheroidal graphite cast iron

Mounting
- Two-bolt mounting
- Four-bolt mounting

Compliance to standards
- ISO 113 (two-bolt plummer block housings)

Supersedes
- SNL, SN, SNA, SNH series

SE plummer (pillow) block housings are a new generation of the most popular SKF bearing housings on the market – SNL plummer (pillow) block housings. With a number of new features and a stronger material grade, the upgraded housings continue to provide maximum reliability while meeting increasing demands. Different housing variants and seal designs are available, making the use of tailored housings virtually unnecessary and enabling cost-effective bearing arrangements to be made.

SE plummer block housings supersede SNL plummer block housings in the 2, 3, 5 and 6 series, and are available in corresponding sizes, from size 507 up to 515-612. From size 516-613, SNL plummer block housings in the 2, 3, 5 and 6 series remains.

Split plummer block housings SE 2, 3, 5 and 6 series

Designations **141**

Standard housing design **143**
Features and benefits 144
Housing material 148
Paint, corrosion protection 148
Dimension standards 148
Interchangeability 148

Product data **148**
Initial grease fill 148
Torque values for cap bolts 148

Ordering information **149**

Product tables (in Chapter 2)
2.1 SNL and SE plummer block housings for bearings on an adapter sleeve, metric shafts 86
2.2 SNL and SE plummer block housings for bearings on an adapter sleeve, inch shafts 100
2.3 SNL and SE plummer block housings for bearings on a cylindrical seat . . 120

Designations

Designation system for SE plummer (pillow) block housings

_SE_ 512-610 TD

Prefix for bolt holes

_	Two oblong cast holes for attachment bolts
F	Four oblong cast holes for attachment bolts
S	No holes for attachment bolts (drilled holes can be supplied)

Series

SE	Standard plummer block housing

Material

_	Grey cast iron
D	Spheroidal graphite cast iron

Size identification

2(00)	Housing for bearings on a cylindrical seat, diameter series 2
3(00)	Housing for bearings on a cylindrical seat, diameter series 3
5(00)	Housing for bearings on an adapter sleeve, diameter series 2
6(00)	Housing for bearings on an adapter sleeve, diameter series 3
..(00)	Size code of the bearing, (00) × 5 = bearing bore diameter [mm]

Suffixes[1)]

V	Grease escape hole in the housing base
T	Drilled and tapped hole 1/4-28 UNF at one side of the housing cap to lubricate a seal. Grease fitting AH 1/4-28 SAE-LT supplied with the housing
TD	Drilled and tapped hole 1/4-28 UNF at both sides of the housing cap to lubricate the seals. Two grease fittings AH 1/4-28 SAE-LT supplied with the housing
/MS1	Two drilled holes for attachment bolts
/MS2	Four drilled holes for attachment bolts

[1)] When multiple suffixes are used, they are listed in the same order as shown here.

Split plummer block housings SE 2, 3, 5 and 6 series

Designation system for seals

TSN 512 L_

Series

TSN	Seal for SE plummer block housings
FS	Felt strip
FSB	Felt strip for high operating temperature

Size identification

2(00)	Housing for bearings with a cylindrical bore, diameter series 2
3(00)	Housing for bearings with a cylindrical bore, diameter series 3
5(00)	Housing for bearings on an adapter sleeve, diameter series 2
6(00)	Housing for bearings on an adapter sleeve, diameter series 3
..(00)	Size code of the bearing, (00) x 5 = bearing bore diameter [mm]
...	For felt strips only, number indicating the length of the strip

Seal type

A	V-ring seal
C	Felt seal
CB	Felt seal for high operating temperatures
L	Four-lip seal
S	Labyrinth seal
NB	Taconite seal with axial labyrinth and V-ring
NC	Taconite seal with axial labyrinth
ND	Taconite seal with radial labyrinth and V-ring

Indication for an inch shaft

A, E	Seal for inch shaft

Designation system for end covers

ASNH 512-610

Series

ASNH	End cover for SE plummer block housings

Size identification

...	Housing size identification

Designation system for locating rings

FRB 13/110

Series

FRB	Locating ring for SKF bearing housings

Size identification

...	Width and outside diameter of the locating ring [mm]

Standard housing design

SE plummer (pillow) block housings in the 2, 3, 5 and 6 series are split housings consisting of a cap and base (→ **fig. 1**). They have two holes cast into the base for attachment bolts. The housings are designed on the "building block" principle to enable a wider choice of bearings and seals as well as a variety of shaft-bearing combinations and lubrication methods.

Fig. 1

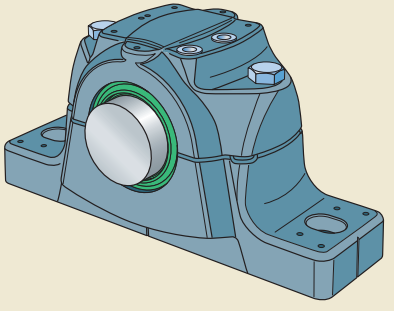

Features and benefits

SE plummer block housings in the 2, 3, 5 and 6 series have the following features and benefits:

Stiffer and more robust housing

The new, optimized design together with their stronger material grade make SE housings more robust compared to SNL housings.

With larger ribs in the base, and additional material around the holes for attachment bolts (→ **figs. 2** and **3**), SE housings are stiffer than their predecessors. The attachment bolts can be preloaded to locate the housing without deforming the base or housing bore.

Better heat dissipation

The ribs around the perimeter and in the centre of the base (→ **fig. 3**) are larger, to increase the contact area between the base and support surface. This results in improved heat flow from the bearing outer ring to the support surface.

Improved markings on the housing

The housing cap and base are matched during manufacture and are not interchangeable with the caps and bases of other housings. A unique serial number on both housing parts helps avoid any mismatches (→ **fig. 4**).

The designation on the housing cap has also been enhanced for readability and now contains the complete housing designation, i.e. with variant suffixes, for better traceability (→ **fig. 5**).

Fig. 2

Reinforcement rib in the base

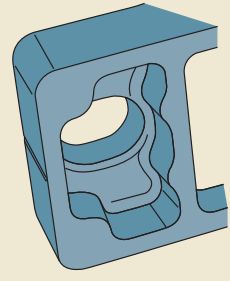

Fig. 3

Enlarged central rib for better support and heat dissipation

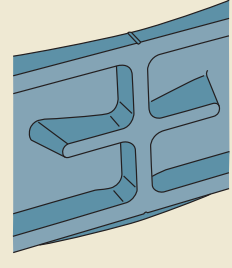

Fig. 4

Individually marked cap and base

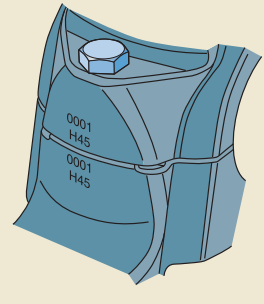

Dimples to locate accessories

Dimples cast into the housing cap indicate where grease fittings and condition monitoring sensors can be mounted for best results (→ **fig. 5**).

Simpler mounting

The grease fitting kit contains torque values for the cap bolts and data for initial grease fills.

To simplify mounting and make alignment more accurate, lines indicating the centre of the bearing seat and housing bore axis are cast into the housing base. Dimples indicate the position for dowel pins (→ **fig. 6**). Mounting instructions are supplied with each seal pack.

Simpler maintenance

SE housings have a pry slot between the cap and base to ease removal of the cap during dismounting (→ **fig. 4**).

Fig. 5

Dimples indicate positions for accessories

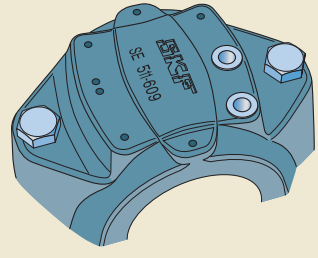

Fig. 6

Cast indications mark the centre of the housing bore and bearing seat

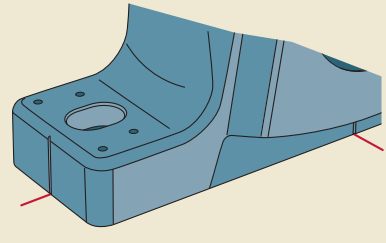

Grease guiding system

For efficient relubrication from the side, SE housings from size 511 to 515 have an integrated flange that guides grease from the grease fitting directly to the bearing (→ **fig. 7**). This can reduce grease consumption and disposal costs.

Grease level markings

To avoid over-filling, markings at each corner inside the housing base indicate the proper grease level for an initial 20 or 40% fill of the free space between housing and bearing (→ **fig. 8**).

Better lubrication facilities

The hole in the housing cap for relubrication through the centre of the bearing is positioned off-centre relative to the shaft axis (→ **fig. 9**).

Fig. 7

Grease guiding system

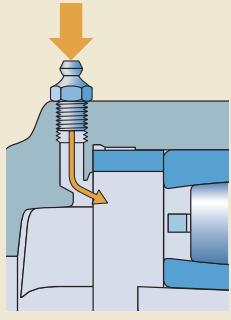

Fig. 8

Grease level markings

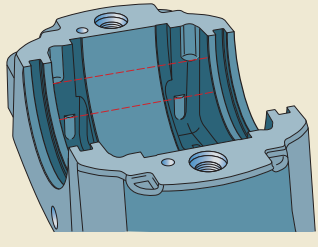

Fig. 9

Improved position for relubrication

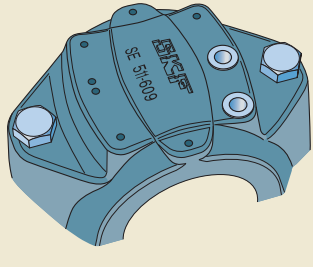

New position of grease escape hole

The grease escape hole, on housings with a V suffix, is parallel to the shaft (→ **fig. 10**) for easier access after the housing is mounted. The hole is threaded and plugged.

Improved corrosion protection

SE housings are well protected from corrosion. The corrosivity category of the paint is higher than for SNL housings (→ *Environmental conditions*, **page 36**).

Fig. 10

New position of grease escape hole

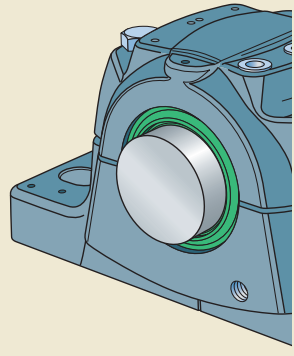

Housing material

SE plummer block housings are made of an improved grade of grey cast iron compared to SNL housings.

Paint, corrosion protection

SE plummer block housings are painted black (RAL 9005) using a water based alkyd/acryl paint. The paint protects the housing in accordance with ISO 12944-2, corrosivity category C3 (i.e. exterior atmospheres with a moderate level of pollution; coastal areas with low salinity; interior atmospheres with high humidity and some air pollution). It is not affected by most lubricating or engine oils, cutting fluids or alkalescent washing chemicals. Housings can be repainted with most water or solvent based 1- or 2-component paints.

Unpainted surfaces are protected by a solventless rust inhibitor.

Dimension standards

Boundary dimensions are in accordance with ISO 113 for two-bolt plummer block housings.

Interchangeability

SE plummer block housings in the 2, 3, 5 and 6 series are dimensionally interchangeable with housings in the SNL 2, 3, 5 and 6 series and former plummer block housings in the SN, SNA and SNH series.

Product data

SE plummer (pillow) block housings supersede SNL plummer (pillow) block housings for sizes 507 up to and including 515-612. Technical data for SE housings, such as hole, groove and dowel pin dimensions, shaft end lengths, loads, initial grease fills, and bolt torques, is included in the data tables in the chapter on SNL housings (→ *Split plummer block housings SNL 2, 3, 5 and 6 series*, starting on **page 55**).

The product tables for SE housings are also included in the chapter on SNL housings (→ **page 86**). When in doubt, contact the SKF application engineering service.

Ordering information

For SE housings in the 2, 3, 5 and 6 series, each of the following items must be ordered separately:

- housing
- seals
- end cover
- locating rings
- bearing
- adapter sleeve

Order example

Two plummer block housings with four-lip seals are required for a 22212 EK spherical roller bearing on an H 312 adapter sleeve and a C 2212 KTN9 CARB toroidal roller bearing on an H 312 E adapter sleeve. One housing will accommodate the non-locating bearing at the end of the shaft. The other housing will accommodate the locating bearing and a through shaft.

The following items should be ordered (in addition to the bearings and adapter sleeves):

- 2 housings SE 512-610
- 2 four-lip seal packs TSN 512 L (each pack contains two seals)
- 1 end cover ASNH 512-610
- 4 locating rings FRB 10/110



Split plummer block housings SNLN 30 series

Bearing types
- Spherical roller bearings
- CARB toroidal roller bearings

Bearing dimension series
- 30, 40

Shaft diameter range
- 110 to 280 mm

Typical shaft-bearing combinations
- Plain shaft with bearing on an adapter sleeve
- Stepped shaft with bearing on a cylindrical seat

Seals
- Four-lip
- Labyrinth
- Felt
- V-ring
- Heavy-duty

Lubrication
- Grease

Materials
- Grey cast iron
- Spheroidal graphite cast iron

Mounting
- Two-bolt mounting
- Four-bolt mounting

Compliance to standards
- ISO 113 (two-bolt plummer block housings)

Supersedes
- SN 30 series

SNLN 30 plummer (pillow) block housings are robust and versatile housings. They are designed for bearings in the 30 dimension series, and can also accommodate some bearings in the 40 dimension series for mounting on a cylindrical shaft seat. They enable the incorporated bearings to achieve maximum service life with less need for maintenance. Different housing variants and seal designs are available, making the use of tailored housings virtually unnecessary and enabling cost-effective bearing arrangements to be made.

Split plummer block housings SNLN 30 series

Designations 153

Standard housing design 155
Features and benefits 156
Housing material 158
Paint, corrosion protection 158
Dimension standards 158
Interchangeability 158

Housing variants 158
Housing material 158
Attachment bolt holes 158
Bearing seat tolerance 158

Sealing solutions 160
Four-lip seals 160
V-ring seals 161
Felt seals 164
Labyrinth seals 164
Taconite heavy-duty seals 164
End covers 164

Using sealed bearings 164

Special seals 166
High-temperature seals 166
Taconite heavy-duty seals with an axial labyrinth 166
Custom seals 167

Design considerations 168
Typical shaft-bearing combinations . . . 168
Locating and non-locating bearing positions 168
Load carrying capacity 170
Operating temperature 172
Operating speed 172
Attachment bolt recommendations 172

Lubrication 173
Initial grease fill 173
Relubrication 174

Mounting 177
Torque specifications 177
Pinning or supporting the housing 177

Condition monitoring 178

Accessories 178

Ordering information 179

Product tables
4.1 SNLN 30 plummer block housings for bearings on an adapter sleeve 180
4.2 SNLN 30 plummer block housings for bearings on a cylindrical seat 184

Designations

Designation system for SNLN 30 plummer block housings

SNLN 3024 SN

Prefix for bolt holes

–	Two oblong cast holes for attachment bolts
S	No holes for attachment bolts (only for housings made of speroidal graphite cast iron)

Series

SNLN	Standard plummer block housing

Material

–	Grey cast iron
D	Spheroidal graphite cast iron

Size identification

30(00)	Housings for bearings in the 30 (or 40) dimension series
..(00)	Size code of the bearing, (00) × 5 = bearing bore diameter [mm]

Suffixes[1)]

V	Grease escape hole in the housing base
T	Drilled and tapped hole 1/4-28 UNF at one side of the housing cap to lubricate the seal. Grease fitting AH 1/4-28 SAE-LT supplied with the housing.
TD	Drilled and tapped hole 1/4-28 UNF at both sides of the housing cap to lubricate the seals. Two grease fittings AH 1/4-28 SAE-LT supplied with the housing.
SN	Drilled and tapped M8 hole for sensor in position 3 (→ **fig. 15**, **page 178**)
/MS1	Two drilled holes for attachment bolts
/MS2	Four drilled holes for attachment bolts

[1)] When multiple suffixes are used, they are listed in the same order as shown here.

Split plummer block housings SNLN 30 series

Designation system for seals

TSN 228 L
TNF 3048

Series

TSN	Seal for SNLN 30 plummer block housings
TNF	Taconite heavy-duty seal with axial labyrinth for housings from size 3034 to 3056

Size identification

30(00)	For housings from size 3024 to 3056, for bearings on an adapter sleeve
2(00)	For housings from size 3024 to 3032, for bearings on a cylindrical seat
30(00)/...	For housings from size 3034 to 3056, for bearings on a cylindrical seat

Seal type

A[1)]	V-ring seal
C[1)]	Felt seal
CB[1)]	Felt seal for high operating temperature
L[1)]	Four-lip seal
S	Labyrinth seal
NB[1)]	Taconite heavy-duty seal with axial labyrinth and V-ring seal
NC[1)]	Taconite heavy-duty seal with axial labyrinth
ND[1)]	Taconite heavy-duty seal with radial labyrinth and V-ring seal

[1)] For housings from size 3024 to 3032

Designation system for end covers

ASNH 526
ETS 3038

Series

ASNH	End cover of plastic for SNLN 30 plummer block housings, size 3024 to 3032
ETS	End cover of grey cast iron for SNLN 30 plummer block housings, size 3034 to 3056

Size identification

524-620	For housings size 3024 (series ASNH)
5(00)	For housings from size 3026 to 3032 (series ASNH)
30(00)	For housings from size 3034 to 3056 (series ETS)
(00)	Size code of the bearing, (00) × 5 = bearing bore diameter [mm]

Designation system for locating rings

FRB 12/180

Series

FRB	Locating ring for SKF bearing housings

Size identification

...	Width and outside diameter of the locating ring [mm]

Standard housing design

SNLN 30 plummer (pillow) block housings are split housings consisting of a cap and base (→ **fig. 1**). They have two holes cast into the base for attachment bolts.

The housings are designed on the "building block" principle to enable a wider choice of bearings and seals as well as a variety of shaft-bearing combinations.

Fig. 1

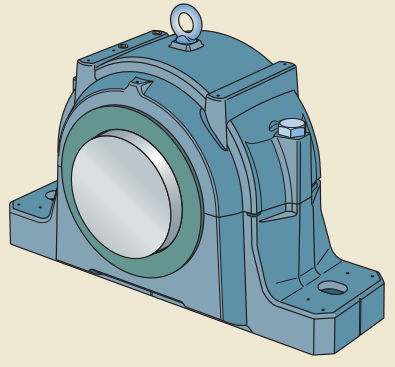

Features and benefits

SNLN 30 housings have the following features and benefits:

Stiff housing

The housing base is reinforced with ribs and has extra material surrounding the holes for the attachment bolts (→ **fig. 2**). This virtually eliminates any distortion of the base and bearing seat during tightening of the attachment bolts.

Good heat dissipation

The centre cross reinforcement in the housing base (→ **fig. 3**) increases the contact area between the housing base and the support surface to improve the heat flow from the bearing outer ring to the support surface.

Grease guiding system

For more efficient relubrication from the side, SNLN 30 housings have an integrated flange that guides grease from the grease fitting directly to the bearing (→ **fig. 4**). This feature is available for housings up to and including size 3038.

Fig. 2

Reinforcement rib in the base

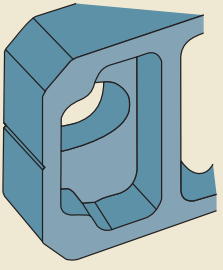

Fig. 3

Centre cross for better heat dissipation

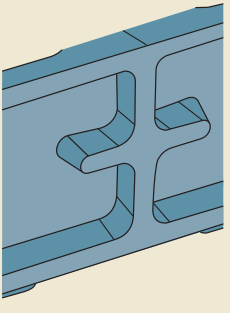

Fig. 4

Grease guiding system

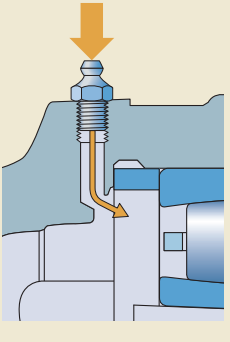

Caps and bases individually marked

The housing cap and base are matched during manufacture and are not interchangeable with the caps and bases of other housings. To prevent any mismatches, a unique serial number is marked on both the housing cap and the base (→ **fig. 5**).

Dimples to locate accessories

Dimples cast into the housing cap indicate where grease fittings and condition monitoring sensors can be mounted for maximum effectiveness (→ **fig. 6**).

Simple mounting

To simplify mounting and make alignment more accurate, lines indicating the centre of the bearing seat and housing bore axis are cast into the housing base. Dimples indicate the position for dowel pins (→ **fig. 7**).

Mounting instructions are supplied with most seal packs[1]. Housings from size 3028 and above are supplied with an eye bolt on the cap for safe and easy handling.

Fig. 5

Individually marked cap and base



Fig. 6

Dimples indicate positions for accessories

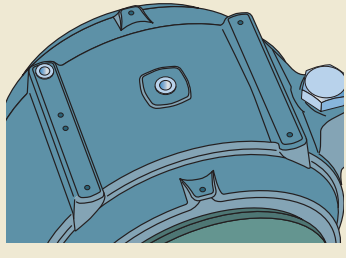

Fig. 7

Cast indications mark the centre of the housing bore

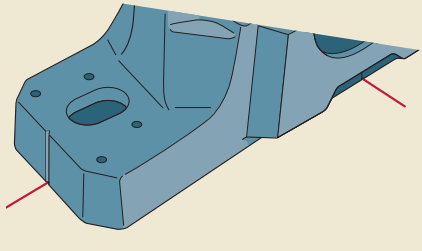

[1] The mounting instructions for housings from size 3024 to 3032, with seals in the 200 series, must be ordered separately.

Housing material

SNLN 30 housings are made of grey cast iron.

Paint, corrosion protection

SNLN 30 housings are painted black (RAL 9005) using a water based alkyd/acryl paint. The paint protects the housing in accordance with ISO 12944-2, corrosivity category C2 (i.e. exterior atmospheres with low level of pollution, interior atmospheres where condensation may occur). The paint is not affected by most lubricating or engine oils, cutting fluids or alkalescent washing chemicals. Housings can be repainted with most water or solvent based 1- or 2-component paints.

Unpainted surfaces are protected by a solventless rust inhibitor.

Dimension standards

Boundary dimensions are in accordance with ISO 113 for two-bolt plummer block housings.

Interchangeability

SNLN 30 plummer block housings are dimensionally interchangeable with the earlier SN 30 housings.

Housing variants

In addition to standard design SNLN 30 housings, a number of variants are also available. Variants include housings made of different materials, alternative attachment bolt hole configurations, different bearing seat tolerance classes and modifications for special applications.

Housing material

For applications where extra strength is needed, SNLN 30 housings are also available in spheroidal graphite cast iron. These housings are supplied with a solid base, designation SSNLND.

Attachment bolt holes

SNLN 30 plummer block housings can be supplied with the following bolt hole configurations:

- four drilled holes
  These variants are available for housings with two cast bolt holes, designation SNLN, and for housings made of spheroidal graphite cast iron with a solid base, designation SSNLND.
  Dimensions are listed in **table 1**. These housings have the designation suffix /MS2.
- two drilled holes
  These variants are available for housings made of spheroidal graphite cast iron with a solid base, designation SSNLND.
  Dimensions are listed in **table 1**. These housings have the designation suffix /MS1.

Bearing seat tolerance

SNLN 30 housings can be supplied with different bearing seat tolerance classes, e.g. for applications prone to vibration, with rotating outer ring load or for applications operating at high temperatures.

For additional information, contact the SKF application engineering service.

Table 1

Dimensions for drilled attachment bolt holes

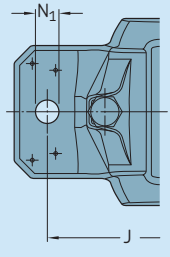

SSNLND.../MS1

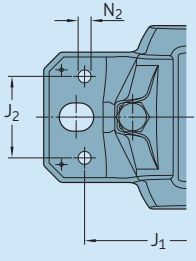

SNLN.../MS2

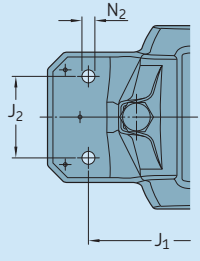

SSNLND.../MS2

Housing Size	Two bolt holes (/MS1) Dimensions J	N_1	Appropriate bolt size	Four bolt holes (/MS2) Dimensions J_1	J_2	N_2	Appropriate bolt size
–	mm			mm			
SNLN 3024	320	26	M24	300	66	18	M16
SNLN 3026	350	26	M24	320	74	18	M16
SNLN 3028	350	26	M24	330	74	18	M16
SNLN 3030	380	28	M24	370	80	22	M20
SNLN 3032	390	28	M24	380	80	22	M20
SNLN 3034	450	35	M30	430	100	26	M24
SNLN 3036	470	35	M30	450	100	26	M24
SNLN 3038	470	35	M30	450	100	26	M24
SNLN 3040	515	35	M30	500	100	26	M24
SNLN 3044	580	42	M36	560	105	28	M24
SNLN 3048	610	42	M36	580	115	28	M24
SNLN 3052	680	48	M42	630	120	35	M30
SNLN 3056	720	48	M42	650	132	35	M30

Sealing solutions

SNLN 30 plummer (pillow) block housings are available with different standard sealing solutions (→ **fig. 8**).

- four-lip seals (TSN .. L)
- V-ring seals (TSN .. A)
- felt seals (TSN .. C)
- labyrinth seals (TSN .. S)
- taconite heavy-duty seals (TSN .. ND, TNF ..)
- end covers (ASNH .., ETS ..)

The housing size determines which sealing solutions can be used. **Table 2**, **page 162**, provides an overview of the characteristics and suitability of each sealing solution. Details are provided in the following text. This information should be used as a guideline, and does not substitute for testing a seal in its application.

Four-lip seals

Four-lip seals replace the former double-lip seals (TSN .. G). When compared to double-lip seals, the new seals are more effective. They also generate less friction, which enables higher shaft speeds. Four-lip seals are radially split and easy to mount.

Fig. 8

Standard sealing solutions for SNLN 30 plummer block housings

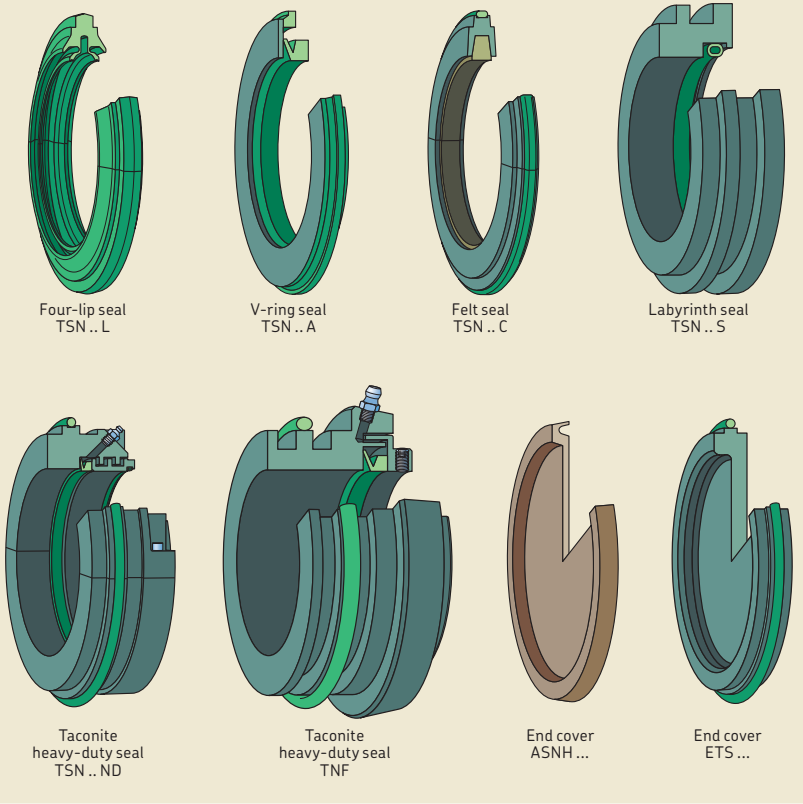

V-ring seals

V-ring seals consist of a V-ring and a sheet steel sealing washer with a vulcanized rubber lip. The rubber lip fits into the seal groove in the housing. The washer is protected against corrosion.

V-rings can accommodate circumferential speeds up to 7 m/s. For circumferential speeds between 7 and 12 m/s, they should be located axially on the shaft. At speeds above 12 m/s, a support ring must be used to prevent the seal from lifting. Recommended dimensions for appropriate support rings for axial and radial location are provided in **table 3**.

The permissible angular misalignment for seals mounted on shafts < 150 mm in diameter is approximately 1,5° and approximately 1° for larger shafts. The axial movement of the shaft relative to the housing is limited to ±1,5 mm.

For arrangements with a vertical shaft, the V-ring of the lower seal should be mounted inside the housing.

Table 3

Recommended dimensions for support rings for V-ring seals

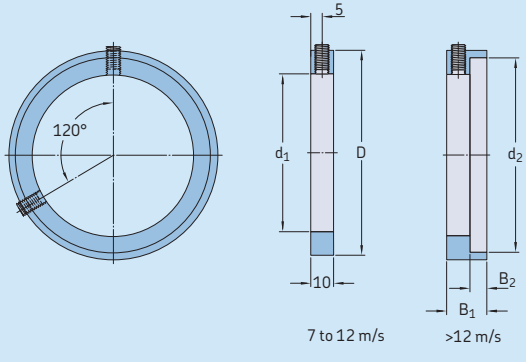

Shaft diameter d_a d_b[1]	Dimensions d_1	d_2	B_1	B_2	D	Grub screw to DIN 913	V-ring seal Standard designation	Alternative designation
mm	mm					–	–	
110	110	122,9	17,5	7,5	128	M6 × 8	110 VA R	CR 401100
115	115	127,4	17,5	7,5	133	M6 × 8	110 VA R	CR 401100
125	125	138,1	17,5	7,5	143	M6 × 8	130 VA R	CR 401300
135	135	147,5	17,5	7,5	153	M6 × 8	130 VA R	CR 401300
140	140	152,9	17,5	7,5	158	M6 × 8	140 VA R	CR 401400
145	145	158,1	17,5	7,5	163	M6 × 8	150 VA R	CR 401500
155	155	167,5	18,5	8,5	173	M6 × 8	150 VA R	CR 401500
165	165	179,9	18,5	8,5	185,5	M6 × 8	170 VA R	CR 401700
175	175	189,3	18,5	8,5	195	M6 × 8	170 VA R	CR 401700

[1] d_a: shaft diameter for bearings on an adapter sleeve
d_b: shaft diameter for bearings on a stepped shaft

Standard seals for SNLN 30 plummer block housings

Seal	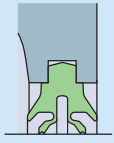	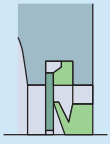	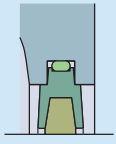
Type	Four-lip split	V-ring	Felt split
Designation	TSN .. L	TSN .. A	TSN .. C
Size range for adapter sleeve mounting	3024 to 3032	3024 to 3032	3024 to 3032
Size range for cylindrical seat mounting	224 to 230	224 to 232	n/a
Material	thermoplastic polyester elastomer	nitrile rubber, steel	felt, nitrile rubber, aluminium
Seals per pack	2 seals	2 seals	2 seals
Application conditions and requirements			
Temperature [°C]	–40 to +100	–40 to +100	–40 to +100
Temperature [°F]	–40 to +210	–40 to +210	–40 to +210
Max. circumferential speed[1] [m/s]	13	7[2]	4
Max. misalignment [°]	0,5	1 to 1,5	0,5
Low friction	++	++	–
Axial shaft displacement	++	–	++
Vertical shaft arrangement	+	++[3]	––
Replacement	++	–	+
Shaft tolerance class	h9 Ⓔ	n/a	h9 Ⓔ
Shaft roughness R_a [µm]	≤ 3,2	n/a	≤ 3,2
Sealing suitability			
Dust	++	+	-
Fine particles	++	+	–
Coarse particles	++	+	+
Chips	+	––	+
Liquids when sprayed	+	+	–
Direct sunlight	+	––	++

Symbols: n/a not applicable, ++ very suitable, + suitable, – limited suitability, –– unsuitable

1) To convert circumferential speeds to rotational speeds, refer to **table 7** on **page 37**.
2) Higher speeds are permissible if the V-ring is located axially on the shaft.
3) When the V-ring of the lower seal is mounted inboard

Table 2

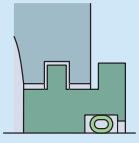	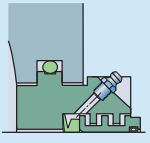	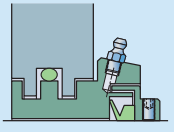	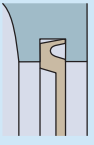	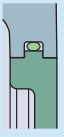
Labyrinth	Taconite	Taconite	End cover	End cover
TSN .. S	TSN .. ND	TNF ..	ASNH ..	ETS ..
3024 to 3056	3024 to 3032	3034 to 3056	3024 to 3032	3034 to 3056
224 to 232, 3034/185 to 3056/295	224 to 232	3034/185 to 3056/295		
steel or cast iron, silicone	steel, nitrile rubber	steel, nitrile rubber	polymer	cast iron, silicone
1 seal	1 seal	1 seal	1 end cover	1 end cover
–50 to +200	–40 to +100	–40 to +100	–40 to +110	–50 to +200
–60 to +390	–40 to +210	–40 to +210	–40 to +230	–60 to +390
not limited	12	12	n/a	n/a
0,3	0,5	0,3	n/a	n/a
++	+	+	n/a	n/a
+	+	+	n/a	n/a
––	–	–	++	++
–	–	–	++	++
h9 Ⓔ	h9 Ⓔ	h9 Ⓔ	n/a	n/a
≤ 3,2	≤ 3,2	n/a	n/a	n/a
–	++	++	++	++
+	++	++	++	++
+	++	++	++	++
++	++	++	++	++
––	++	++	++	++
++	++	++	++	++

Felt seals

Felt seals are simple and effective. At circumferential speeds above 4 m/s, a small gap forms between the felt and shaft, transforming the contact seal into a non-contact, gap-type seal.

Labyrinth seals

For applications where there are high speeds or extreme temperatures, SKF recommends using labyrinth seals. Labyrinth rings, mounted on the shaft, form a multi-stage labyrinth seal with the housing seal grooves. Hollow, silicone rubber cords, supplied with the rings, hold the rings in place on the shaft.

Taconite heavy-duty seals

For bearing arrangements that must operate under highly contaminated conditions, such as those encountered in mining, taconite heavy-duty seals, which can be filled with grease, are recommended. Grease enhances the sealing effect and extends the service life of the seals. Taconite heavy-duty seals are labyrinth seals combined with a V-ring seal. The labyrinth ring is solid but the main body of the seal is split.

SNLN 30 housings from size 3024 to 3032 accommodate taconite seals with a radial labyrinth. SNLN 30 housings from size 3034 to 3056 accommodate solid taconite seals with an axial labyrinth. Both can be relubricated via a grease fitting in the main body of the seal.

The axial movement of the shaft relative to the housing is limited to ±1,5 mm for shaft diameters ranging from 110 to 150 mm, ±2 mm for shaft diameters ranging from 160 to 200 mm and ±4 mm for larger shaft diameters.

End covers

Housings at the end of a shaft should have an end cover that fits into the seal groove in the housing.

For housings from size 3024 to 3032, the end covers are made of plastic and are suitable for operating temperatures from –40 to +110 °C *(–40 to +230 °F)*. For applications where temperatures exceed 110 °C *(230 °F)*, steel end covers should be used. These can be cut from sheet steel and placed in the seal groove. Use a hollow silicone rubber cord to hold the cover in place.

For housings from size 3034 to 3056, the end covers are made of grey cast iron and are suitable for operating temperatures from –50 to +200 °C *(–60 to +390 °F)*. They are inserted, together with a hollow silicone rubber cord, in the housing seal groove.

Details of the permissible length of the shaft end are provided in **table 4**.

Using sealed bearings

Using sealed bearings in housings with standard seals is a good solution for highly contaminated environments. The sealed bearing together with the housing seal and grease provide three layers of protection (→ *SKF three-barrier solution*, **page 39**).

SNLN 30 housings can be used together with SKF sealed self-aligning bearings. When using taconite heavy-duty seals, a sealed bearing does not enhance the sealing effect during operation, but still protects the bearing against contaminants during mounting.

Table 4

Permissible length of a shaft end

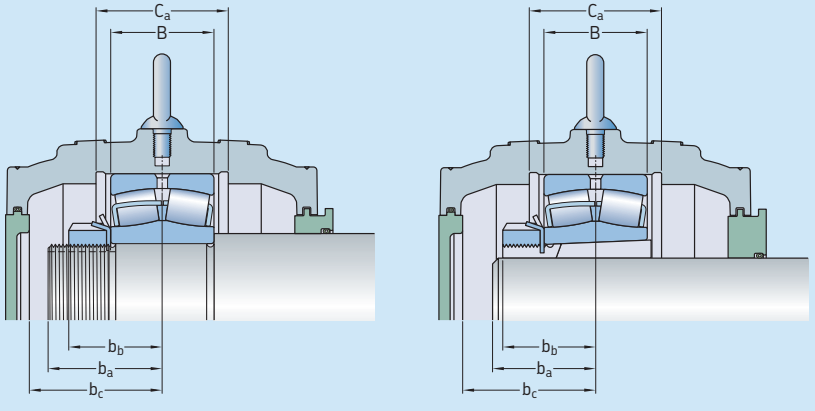

Housing Size	Dimensions			Appropriate bearing Designation	Dimensions	
	b_a[1]	b_c	C_a		B	b_b
–	mm			–	mm	
SNLN 3024	48	70	70	**23024**	46	45
SNLN 3026	52	76	79	**23026**	52	49
SNLN 3028	53	75	79	**23028**	53	50,5
SNLN 3030	57	82	86	**23030**	56	54
SNLN 3032	60	82	90	**23032**	60	57,5
SNLN 3034	65	87	87	**23034**	67	62
SNLN 3036	69	94	94	**23036**	74	66,5
SNLN 3038	71	99	95	**23038**	75	68
SNLN 3040	75	98	102	**23040**	82	72,5
SNLN 3044	89	108	110	**23044**	90	86
SNLN 3048	95	110	112	**23048**	92	92
SNLN 3052	101	120	124	**23052**	104	98
SNLN 3056	106	123	126	**23056**	106	103

[1] For the non-locating bearing position, the values for b_a must be adjusted if the bearing is not centred in the housing seat.

Special seals

In addition to the standard seal assortment, SNLN 30 housings are available, on request, with high-temperature seals, taconite heavy-duty seals with an axial labyrinth or custom seals for special applications.

High-temperature seals

For high operating temperatures, up to 250 °C *(480 °F)*, high-temperature felt seals should be used. The felt seals can accomodate circumferential speeds up to 2 m/s. They are identified by the designation suffix CB, e.g. TSN 3024 CB.

Taconite heavy-duty seals with an axial labyrinth

Taconite heavy-duty seals with an axial labyrinth (TSN .. NC or TSN .. NB, → **fig. 9**) can be used under the same conditions as taconite seals with a radial labyrinth. The seals are greased via a hole in the housing cap. Therefore, they can only be used with housings with the suffix T (at the end of a shaft) or the suffix TD (for through shafts).

TSN .. NB seals have a V-ring. It limits the axial movement of the shaft relative to the housing to ±1,5 mm.

Specifications for the seals are listed in **table 5**.

Fig. 9

Taconite heavy-duty seals with an axial labyrinth

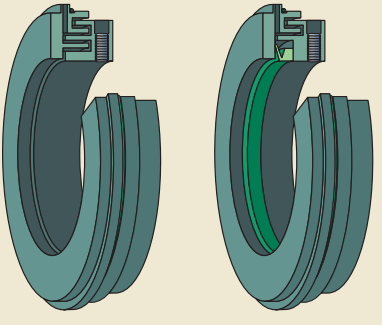

TSN.. NC TSN.. NB

Table 5

Taconite heavy-duty seals with an axial labyrinth

Seal		
Designation	TSN .. NC	TSN .. NB
Size range	3024 to 3032	3024 to 3032
Application conditions and requirements		
Temperature [°C]	–40 to +250	–40 to +100
Temperature [°F]	–40 to +480	–40 to +210
Max. circumferential speed[1] [m/s]	not limited	12
Max. misalignment [°]	0,5	0,5
Max. axial shaft displacement from a central position [mm]	±2,5	±1,5
Shaft tolerance class	h9 Ⓔ	h9 Ⓔ

[1] To convert circumferential speeds to rotational speeds, refer to **table 7** on **page 37.**

Custom seals

SNLN 30 housings can be equipped with any type of seal that fits the seal groove dimensions in the housing. The relevant dimensions are provided in **table 6**.

Custom seals can be supplied by SKF. For additional information, contact the SKF application engineering service.

Table 6

Seal groove dimensions

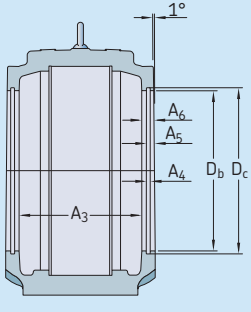

Housing Size	Dimensions A_3	A_4	A_5	A_6	D_b	D_c
–	mm					
SNLN 3024	130	6	10	15	157,5	167,5
SNLN 3026	142	6	10	15	167,5	177,5
SNLN 3028	141	6	11	16	177,5	187,5
SNLN 3030	154	6	11	16	192,5	202,5
SNLN 3032	156	6	11	15	202,5	212,5
SNLN 3034	177	6	11	15	212,5	222,5
SNLN 3036	192	6	11	15	225,5	232,5
SNLN 3038	198	6	11	17	232,5	242,5
SNLN 3040	197	8	14	20	242,5	254,5
SNLN 3044	217	8	14	20	262,5	274,5
SNLN 3048	217	8	16,5	25	282,5	294,5
SNLN 3052	236	8	16,5	25	302,5	314,5
SNLN 3056	245	8	16,5	25	322,5	334,5

Design considerations

For general information about system design, refer to the following sections:

- *Typical shaft-bearing combinations* (→ **page 41**)
- *Locating/non-locating bearing arrangements* (→ **page 40**)
- *Load carrying capacity* (→ **page 44**)
- *Axial load carrying capacity for bearings on sleeves* (→ **page 44**)
- *Specifications for shafts and housing support surfaces* (→ **page 45**)

For additional information about rolling bearings, refer to the product information available online at skf.com/housings.

Typical shaft-bearing combinations

SNLN 30 housings can accommodate different shaft-bearing combinations (→ **fig. 10**):

- Plain shaft with bearing on an adapter sleeve
- Stepped shaft with bearing on a cylindrical seat
- Stepped shaft with bearing on an adapter sleeve
- Stepped shaft with bearing on a withdrawal sleeve

Plain shaft with bearing on an adapter sleeve

Housings, appropriate parts and dimensions are listed in **product table 4.1**, starting on **page 180**.

Stepped shaft with bearing on a cylindrical seat

Housings, appropriate parts and dimensions are listed in **product table 4.2**, starting on **page 184**.

The bearing is located axially between a shaft shoulder and a spacer sleeve, which is held in place by another component on the shaft. The outside diameter of the sleeve must match the bore diameter of the seal. The spacer sleeve is not supplied by SKF.

Stepped shaft with bearing on an adapter sleeve

When using an SNLN 30 housing for this arrangement, the dimensions of the abutment ring and the spacer sleeve must fit the housing. Abutment rings and spacer sleeves are not supplied by SKF.

Stepped shaft with bearing on a withdrawal sleeve

When using an SNLN 30 housing for this arrangement, the withdrawal sleeve must be located axially on the shaft. This can be done using a spacer sleeve that is held in place by another component. Using a lock nut can be difficult because of the limited space in the housing. The outside diameter of the spacer sleeve must be the same as the shaft abutment diameter, d_b, (→ **product tables**) and it should be in accordance with the h9Ⓔ tolerance class to fit the seal. The spacer sleeve is not supplied by SKF.

Locating and non-locating bearing positions

SNLN 30 housings can be used for both the locating and non-locating bearing positions.

The housings are machined standard for bearings in the non-locating position. Bearings in the locating position as well as CARB toroidal roller bearings must be secured in the housing on both sides with locating rings. Appropriate locating rings are listed in the product tables.

Fig. 10

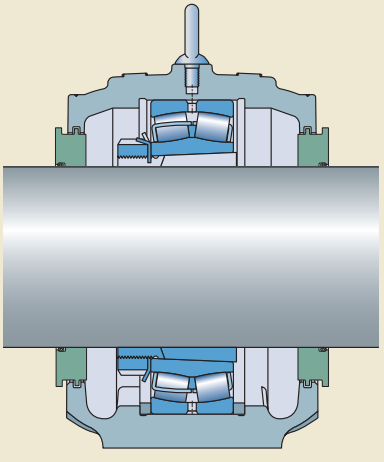

Plain shaft with bearing on an adapter sleeve

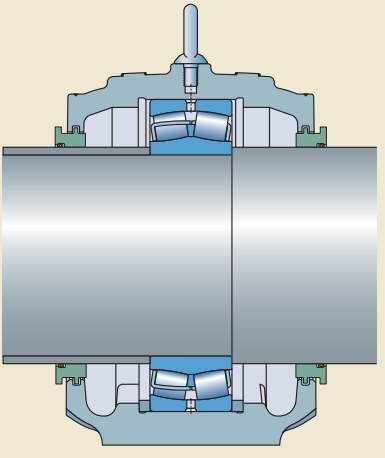

Stepped shaft with bearing on a cylindrical seat

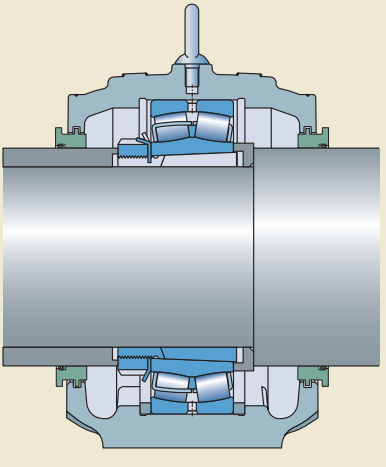

Stepped shaft with bearing on an adapter sleeve

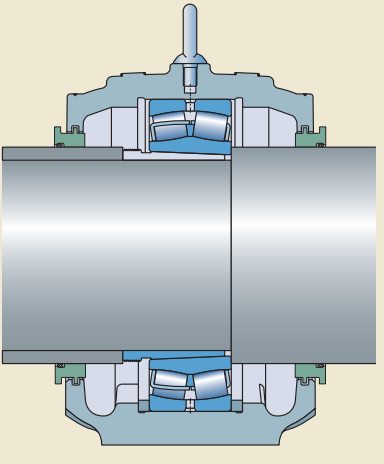

Stepped shaft with bearing on a withdrawal sleeve

Load carrying capacity

SNLN 30 housings are intended for loads acting perpendicularly toward the support surface. If the housing is supported over its entire base and the loads are purely perpendicular, loads are limited only by the bearing. If loads acting in other directions occur, or if the housing is not supported over its entire base, be sure that the magnitude of the load is permissible for the housing, the cap bolts and the attachment bolts. When housings are subjected to cyclic loads or dynamic imbalance, contact the SKF application engineering service.

Breaking loads and safety factors

Guideline values for the breaking loads of housings made of grey cast iron are listed in **table 7**. To obtain the permissible load for a housing, the appropriate breaking load value should be divided by a factor based on the safety requirements. In general engineering, a safety factor of 6 is typical (→ *Load carrying capacity*, **page 44**). The permissible load can only be exploited if the cap bolts are tightened at least to the torque values listed in **table 8**.

If the housing is not supported over its entire base, the load carrying capacity for loads acting perpendicularly to the support surface may be affected. For additional information, contact the SKF application engineering service.

Table 7

Breaking loads for SNLN 30 plummer block housings made of grey cast iron

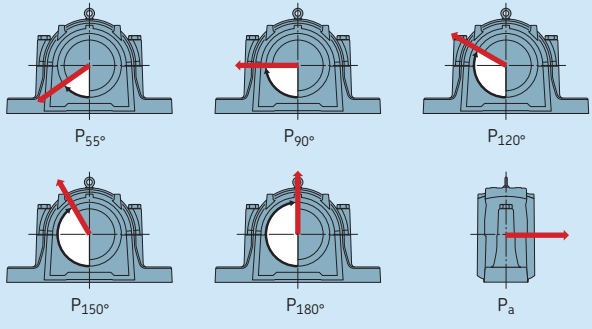

Housing Size	Breaking loads $P_{55°}$	$P_{90°}$	$P_{120°}$	$P_{150°}$	$P_{180°}$	P_a
–	kN					
SNLN 3024	520	310	230	210	260	90
SNLN 3026	620	370	280	250	310	110
SNLN 3028	700	420	310	280	350	120
SNLN 3030	780	470	350	310	390	130
SNLN 3032	840	500	380	340	420	150
SNLN 3034	1 000	600	450	400	500	170
SNLN 3036	1 160	700	520	460	580	200
SNLN 3038	1 300	780	580	520	650	220
SNLN 3040	1 480	890	670	590	740	260
SNLN 3044	1 700	1 020	760	680	850	300
SNLN 3048	1 880	1 130	850	750	940	330
SNLN 3052	2 120	1 270	950	850	1 060	370
SNLN 3056	2 240	1 340	1 000	900	1 120	390

For housings made of spheroidal graphite cast iron, the values obtained from **table 7** should be multiplied by a factor of 1,8.

The load P_a is the axial breaking load of the housing. If the incorporated bearing is mounted on a sleeve, check the permissible axial load for the sleeve.

Additional housing support

When a housing is subjected to loads acting parallel to the support surface, it may be necessary to pin the housing to the support surface or to provide a stop to counter the load.

When loads act at angles between 55° and 120°, or when the axial loads are greater than 5% of $P_{180°}$ (→ **table 7**), the housing should be pinned to the support surface or a stop should be provided to counter the load. The dowel pins or stop should be sufficiently strong to accommodate the loads acting parallel to the support surface.

Recommendations for the position and size of the holes to accommodate dowel pins are provided in **table 11** on **page 177**.

Load carrying capacity of the cap bolts

Approximate values for the yield points for cap bolts are provided in **table 8**. Recommended torque values are listed in the same table. The values in **table 8** apply to 8.8 class cap bolts, which are supplied with SNLN 30 housings made of grey cast iron. SSNLND housings made of spheroidal graphite cast iron are supplied

Table 8

Load carrying capacity and torque values for cap bolts and attachment bolts

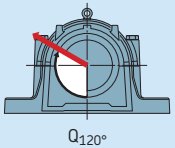

$Q_{120°}$

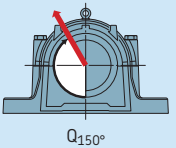

$Q_{150°}$

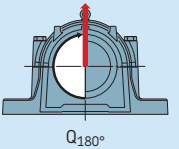

$Q_{180°}$

Housing	Cap bolts					Attachment bolts	
Size	Yield point for two bolts			Size	Tightening torque	Size	Tightening torque[1]
	$Q_{120°}$	$Q_{150°}$	$Q_{180°}$				
–	kN			–	Nm	–	Nm
SNLN 3024	620	360	310	M 20×100	200	M 24	665
SNLN 3026	620	360	310	M 20×100	200	M 24	665
SNLN 3028	620	360	310	M 20×110	200	M 24	665
SNLN 3030	900	520	450	M 24×130	350	M 24	665
SNLN 3032	900	520	450	M 24×130	350	M 24	665
SNLN 3034	900	520	450	M 24×130	350	M 30	1 310
SNLN 3036	900	520	450	M 24×130	350	M 30	1 310
SNLN 3038	900	520	450	M 24×140	350	M 30	1 310
SNLN 3040	900	520	450	M 24×140	350	M 30	1 310
SNLN 3044	1 430	825	715	M 30×170	400	M 36	2 280
SNLN 3048	1 430	825	715	M 30×170	400	M 36	2 280
SNLN 3052	2 100	1 200	1 050	M 36×200	600	M 42	3 640
SNLN 3056	2 100	1 200	1 050	M 36×200	600	M 42	3 640

[1] Recommended by bolt manufacturers

with 10.9 class cap bolts. For these cap bolts, the values obtained from **table 8** should be multiplied by a factor of 1,4.

If a safety factor of 6 is used for the permissible load of grey cast iron SNLN 30 housings, the cap bolts do not need to be considered. In this case, the permissible load of the housing is less than the permissible load for the cap bolts.

Operating temperature

The permissible operating temperature is mainly limited by the seals (→ **table 2**, **page 162**) and the lubricant in the bearing. For temperature limits of SKF bearings and lubricants, refer to the product information available online at skf.com/bearings.

The housing material does not have any additional temperature limits, except for very low temperature applications where impact strength could be a factor.

The housing paint is heat resistant up to 80 °C *(175 °F)* material temperature or 100 °C *(210 °F)* ambient temperature.

When temperatures outside the permissible range are expected, contact the SKF application engineering service.

Operating speed

All seals, except non-contact labyrinth seals, limit the permissible operating speed. Speed limits for seals are provided in **table 2** on **page 162**. For speed limits of the bearing, refer to the product information available online at skf.com/bearings.

Attachment bolt recommendations

In typical applications, 8.8 class hexagon head bolts in accordance with ISO 4014 can be used together with washers. If the load does not act perpendicularly toward the base, it may be necessary to use stronger 10.9 class bolts.

SKF housings can withstand loads resulting from tightening the attachment bolts to the torque values recommended by bolt manufacturers (→ **table 8**, **page 171**). They are valid for oiled, but otherwise untreated, thread surfaces.

SKF cannot guarantee that tightening to the recommended value provides sufficient anchoring. Make sure that attachment bolts, dowels or stops, and a sufficiently strong support can accommodate all occurring loads.

Lubrication

SNLN 30 plummer (pillow) block housings with standard seals are intended for grease lubrication.

The lubricant should be selected based on the operating conditions of the bearing. For additional information about lubricant selection, refer to the product information available online at skf.com/bearings.

Initial grease fill

If no other requirements exist, the free space in the bearing should be completely filled with grease and the free space in the housing should be filled to 20 to 40% of its volume. A 40% grease fill is required when bearings have to be relubricated from the side, while a 20% grease fill is used when bearings are relubricated via the outer ring.

For highly contaminated environments and slow speeds, fill the housing to 70–80%. For best protection against contaminants, use the SKF three-barrier solution (→ **page 39**). For additional information, contact the SKF application engineering service.

Quantities for 20 and 40% grease fills are listed in **table 9**. The values are valid for a typical lithium grease (about 0,95 g/cm³). They include grease for the bearing and the four-lip seals or the sealing washers of V-ring seals. The grease to fill labyrinth seals or taconite heavy-duty seals is not included. For sealed bearings, the values have to be adjusted.

In most applications, the initial grease fill will adequately lubricate the bearing until the grease is exchanged during the next planned maintenance interval.

Table 9

Initial grease fill

Housing Size	**Initial fill** 20%	40%
–	kg	
SNLN 3024	0,25	0,45
SNLN 3026	0,35	0,65
SNLN 3028	0,50	0,70
SNLN 3030	0,50	0,90
SNLN 3032	0,50	1,0
SNLN 3034	0,75	1,4
SNLN 3036	0,95	1,8
SNLN 3038	1,0	1,9
SNLN 3040	1,1	2,0
SNLN 3044	1,5	2,7
SNLN 3048	1,5	2,8
SNLN 3052	2,1	3,8
SNLN 3056	2,3	4,2

Relubrication

SNLN 30 plummer block housings enable relubrication of the incorporated bearings and seals (→ **fig. 11**):

- SNLN 30 housings have two holes that have been drilled and tapped for an AH 1/8-27 PTF grease fitting. On a new housing, the holes are covered by plastic plugs. These plugs should be replaced with the grease fitting and threaded plug supplied with the housing.
- If a larger grease fitting or other equipment has to be used, an adapter to change to a G 1/4 thread is available (→ **page 48**).
- Dimples cast into the top of the housing cap indicate alternative positions where holes can be drilled and tapped to accommodate a grease fitting for bearing or seal relubrication.

Relubrication via the outer ring

The hole in the centre of the cap should be used to relubricate spherical roller bearings with a relubrication feature (a lubrication groove and holes in the outer ring) (→ **fig. 12**). When applying grease via the relubrication feature, the shaft should be rotating.

Relubrication from the side

When relubricating from the side, which is typically necessary for CARB toroidal roller bearings, the offset hole in the housing should be used. SNLN 30 housings from size 3024 to 3038 have an integral flange that guides grease from the grease fitting directly to the rolling elements (→ **fig. 13**).

When bearings mounted on an adapter sleeve have to be relubricated from the side, the grease should be introduced from the side opposite the lock nut.

When bearings mounted at the end of a shaft have to be relubricated from the side, the grease should be applied at the point closest to the end cover.

Fig. 12

Relubrication via the outer ring

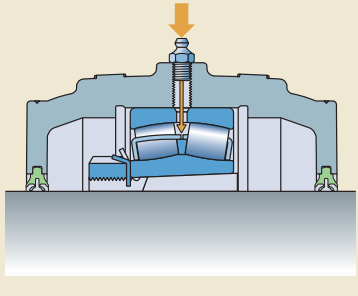

Fig. 13

Relubrication from the side

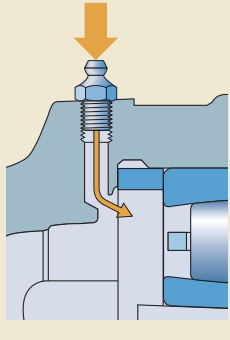

Fig. 11

Relubrication possibilities

SNLN housings up to size 3024

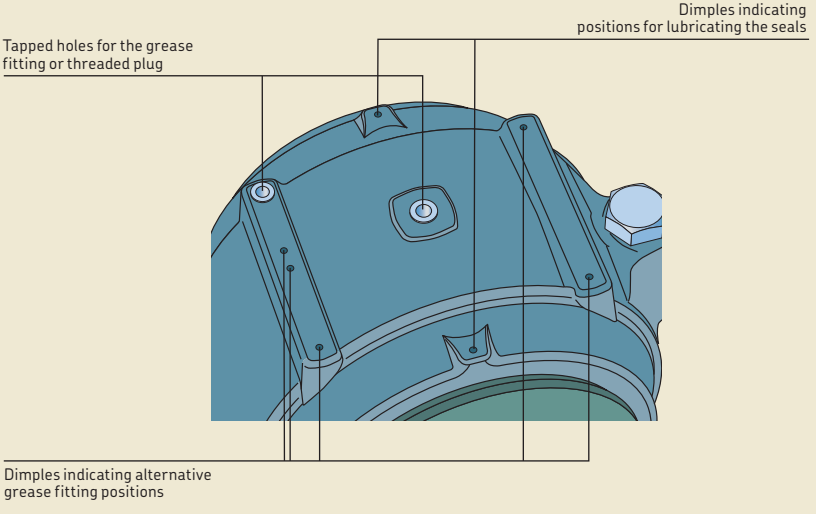

SNLN housings from size 3028 and above

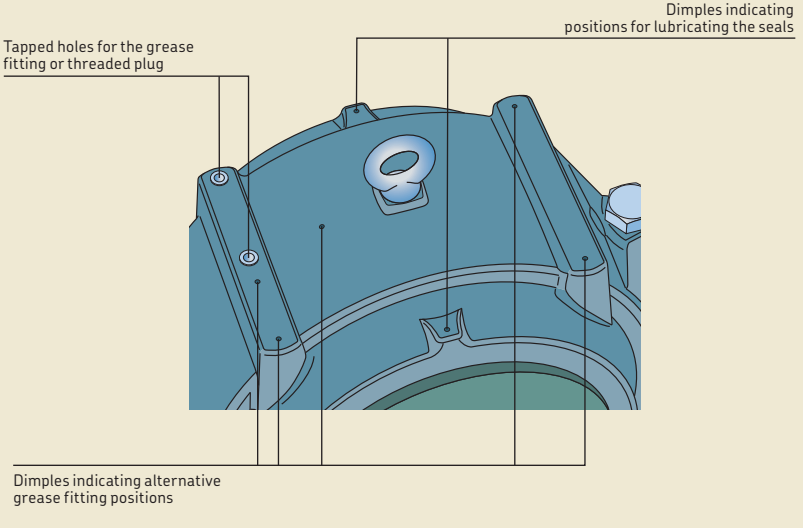

Relubrication from the side for housings with V-ring seals

When relubricating bearings from the side in housings with V-ring seals, mount an additional V-ring inside the housing on the side where grease is applied (→ **fig. 14**). This forces the grease to travel through the bearing and exit the housing on the opposite side.

SKF can supply an appropriate V-ring together with a splash plate that fits in the seal groove to cover a bit more than the top half of the housing. The sets are identified by the series designation ASNA followed by the housing size identification and the suffix V, e.g. ASNA 3024 V, and are available from size 3024 to 3032.

Grease escape holes

When four-lip seals (TSN .. L) or felt seals (TSN .. C) are used, grease cannot escape via the seals. If relubrication is required, the housing should have a grease escape hole.

SNLN 30 housings can be supplied with a grease escape hole (designation suffix V). A grease escape hole can be drilled into the housing using the dimensions provided in **table 10**.

Fig. 14

V-ring and splash plate set mounted in an SNLN 30 housing

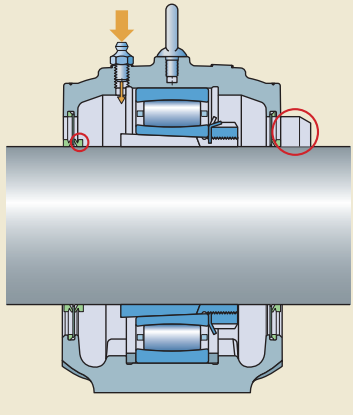

Table 10

Recommended dimensions for grease escape hole

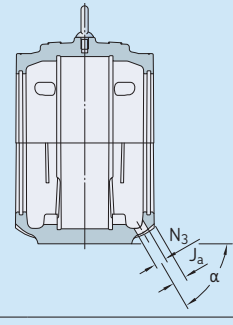

Housing Size	Dimensions J_a	N_3	α
–	mm		
SNLN 3024	21	16	65
SNLN 3026	21,5	20	60
SNLN 3028	24	20	60
SNLN 3030	22	20	55
SNLN 3032	18,5	20	50
SNLN 3034	25	20	60
SNLN 3036	25	20	60
SNLN 3038	25	20	60
SNLN 3040	32	20	65
SNLN 3044	32	25	60
SNLN 3048	32	25	55
SNLN 3052	32	25	55
SNLN 3056	32	25	50

Mounting

SNLN 30 housings must be mounted properly using the appropriate tools and state of the art mechanical mounting methods. All the associated components must also meet certain basic requirements (→ *Specifications for shafts and housing support surfaces*, **page 45**).

Mounting instructions for each housing are provided with the seal pack, except for housings from size 3024 to 3032 with seals in the TSN 2(00) series. For these housing/seal combinations, mounting instructions need to be ordered separately. For information about mounting rolling bearings, refer to the *SKF bearing maintenance handbook* or skf.com/mount.

Torque specifications

Cap bolts should be tightened to the torque values listed in **table 8** on **page 171**. For information about attachment bolts, refer to *Attachment bolt recommendations* on **page 172**.

Pinning or supporting the housing

Some load conditions may require the housing to be pinned to its support surface or a stop to accommodate loads acting parallel to the housing support surface (→ *Additional housing support*, **page 171**).

Recommendations for the position and size of the holes to accommodate dowel pins are provided in **table 11**. Dimples cast into the housing base mark the recommended positions.

Table 11

Position and size of dowel pin holes

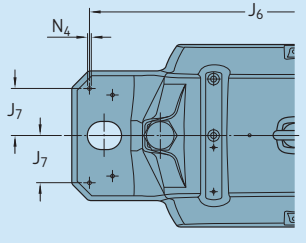

Housing Size	Dimensions J_6	J_7	N_4
–	mm		
SNLN 3024	348	39	8
SNLN 3026	378	44	8
SNLN 3028	378	44	8
SNLN 3030	414	46	12
SNLN 3032	424	46	12
SNLN 3034	486	58	12
SNLN 3036	506	58	12
SNLN 3038	506	58	12
SNLN 3040	566	63	16
SNLN 3044	644	72	16
SNLN 3048	672	76	16
SNLN 3052	760	80	16
SNLN 3056	800	85	16

Condition monitoring

SNLN 30 plummer (pillow) block housings have appropriate positions for condition monitoring sensors (→ **fig. 15**).

Position 1 is a measurement point perpendicular to the shaft, and should be used when the housing is hung from its support or when loads act away from the support surface.

Position 2 is a measurement point parallel to the shaft and should be used when loads act toward the support surface. Both positions 1 and 2 are in accordance with ISO 10816-1.

Position 3 is a measurement point that is approximately 20° to 45° to the shaft axis.

Accessories

The following accessories are available for SNLN 30 plummer (pillow) block housings:

- Adapter for G 1/4 connections: LAPN 1/8
- Automatic lubricators: SKF SYSTEM 24 and SKF MultiPoint
- Grease meter: LAGM 1000E
- Condition monitoring sensors

For additional information, refer to *SKF tools and products* (→ **page 47**).

Fig. 15

Measurement points for condition monitoring



Ordering information

For SNLN 30 plummer (pillow) block housings, each of the following items must be ordered separately:

- housing
- seals
- end cover
- locating rings
- bearing
- adapter sleeve

Order example

Two plummer block housings with four-lip seals are required for two 23024 CCK/W33 spherical roller bearings on H 3024 adapter sleeves. One housing will accommodate the non-locating bearing at the end of the shaft. The other housing will accommodate the locating bearing and a through shaft.

The following items should be ordered (in addition to the bearings and adapter sleeves):

- 2 housings SNLN 3024
- 2 four-lip seal packs TSN 3024 (each pack contains two seals)
- 1 end cover ASNH 524-620
- 2 locating rings FRB 12/180

4.1 SNLN 30 plummer block housings for bearings on an adapter sleeve
d_a **110 – 140** mm

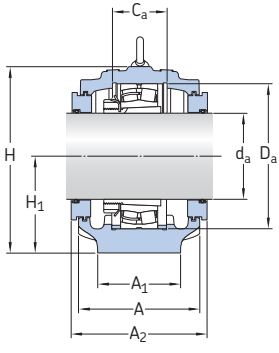

with TSN .. S

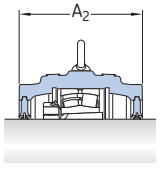

with TSN .. L

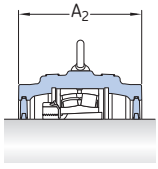

with TSN .. C

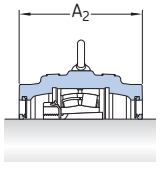

with TSN .. A

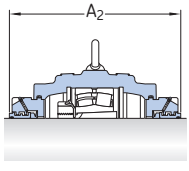

with TSN .. ND

Shaft diameter d_a	**Housing** Designation	**Appropriate parts** Bearing[1]	Adapter sleeve[2]	Locating ring[3]	Seals	End cover	Width incl. seals A_2
mm	–	–					mm
110	**SNLN 3024**	23024 CCK/W33 C 3024 K	H 3024 H 3024 E	FRB 12/180 FRB 12/180	TSN 3024 L TSN 3024 A TSN 3024 C TSN 3024 S TSN 3024 ND	ASNH 524-620	160 160 160 180 240
115	**SNLN 3026**	23026 CCK/W33 23026-2CS5K C 3026 K	H 3026 H 3026 E H 3026	FRB 13,5/200 FRB 13,5/200 FRB 13,5/200	TSN 3026 L TSN 3026 A TSN 3026 C TSN 3026 S TSN 3026 ND	ASNH 526	175 175 175 200 245
125	**SNLN 3028**	23028 CCK/W33 23028-2CS5K C 3028 K	H 3028 H 3028 E H 3028 E	FRB 13/210 FRB 13/210 FRB 13/210	TSN 3028 L TSN 3028 A TSN 3028 C TSN 3028 S TSN 3028 ND	ASNH 528	175 175 175 195 255
135	**SNLN 3030**	23030 CCK/W33 23030-2CS5K C 3030 KV	H 3030 H 3030 E H 3030	FRB 15/225 FRB 15/225 FRB 15/225	TSN 3030 L TSN 3030 A TSN 3030 C TSN 3030 S TSN 3030 ND	ASNH 530	190 190 190 215 265
140	**SNLN 3032**	23032 CCK/W33 23032-2CS5K C 3032 K	H 3032 H 3032 E H 3032 E	FRB 15/240 FRB 15/240 FRB 15/240	TSN 3032 L TSN 3032 A TSN 3032 C TSN 3032 S TSN 3032 ND	ASNH 532	190 190 190 215 270

[1] Only the basic bearing designation is listed. Other bearing variants can also fit the housing.
230(00) – spherical roller bearing, C... – CARB toroidal roller bearing
[2] The adapter sleeve fits the bearing in the same row only.
[3] The locating ring fits the bearing in the same row only. Two locating rings are required.

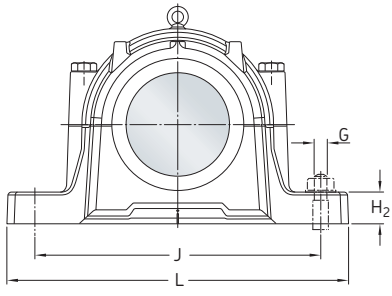

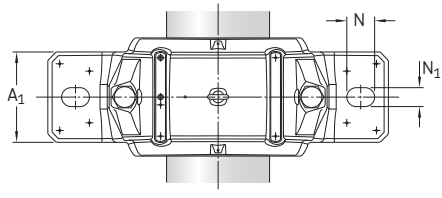

Shaft diameter d_a	**Dimensions** Housing A	A_1	C_a	D_a	H	H_1	H_2	J	L	N	N_1	G	**Eye bolt** according to DIN 580	**Mass** Housing
mm	mm												–	kg
110	160	110	70	180	218	112	40	320	380	32	26	24	–	17,5
115	175	120	79	200	242	125	45	350	410	32	26	24	–	22,5
125	175	120	79	210	270	140	45	350	410	32	26	24	M10	30,0
135	190	130	86	225	290	150	50	380	445	35	28	24	M10	40,0
140	190	130	90	240	297	150	50	390	460	35	28	24	M10	41,0

4.1 SNLN 30 plummer block housings for bearings on an adapter sleeve
d_a **150 – 260** mm

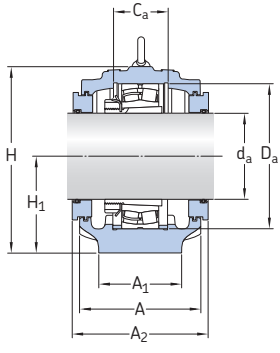

with TSN .. S

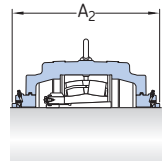

with TNF

Shaft diameter d_a	**Housing** Designation	**Appropriate parts** Bearing[1]	Adapter sleeve[2]	Locating ring[3]	Seals	End cover	Width incl. seals A_2
mm	–	–					mm
150	**SNLN 3034**	23034 CCK/W33 23034-2CS5K C 3034 K	H 3034 H 3034 E H 3034 E	FRB 10/260 FRB 10/260 FRB 10/260	TSN 3034 S TNF 3034	ETS 3034	230 266
160	**SNLN 3036**	23036 CCK/W33 23036-2CS5K C 3036 K	H 3036 H 3036 E H 3036	FRB 10/280 FRB 10/280 FRB 10/280	TSN 3036 S TNF 3036	ETS 3036	245 280
170	**SNLN 3038**	23038 CCK/W33 C 3038 K	H 3038 H 3038	FRB 10/290 FRB 10/290	TSN 3038 S TNF 3038	ETS 3038	255 290
180	**SNLN 3040**	23040 CCK/W33 23040-2CS5K C 3040 K	H 3040 H 3040 H 3040	FRB 10/310 FRB 10/310 FRB 10/310	TSN 3040 S TNF 3040	ETS 3040	265 295
200	**SNLN 3044**	23044 CCK/W33 23044-2CS5K C 3044 K	OH 3044 H OH 3044 H OH 3044 H	FRB 10/340 FRB 10/340 FRB 10/340	TSN 3044 S TNF 3044	ETS 3044	285 315
220	**SNLN 3048**	23048 CCK/W33 23048-2CS5K C 3048 K	OH 3048 H OH 3048 HE OH 3048 H	FRB 10/360 FRB 10/360 FRB 10/360	TSN 3048 S TNF 3048	ETS 3048	295 355
240	**SNLN 3052**	23052 CCK/W33 23052-2CS5K C 3052 K	OH 3052 H OH 3052 HE OH 3052 H	FRB 10/400 FRB 10/400 FRB 10/400	TSN 3052 S TNF 3052	ETS 3052	312 374
260	**SNLN 3056**	23056 CCK/W33 C 3056 K	OH 3056 H OH 3056 H	FRB 10/420 FRB 10/420	TSN 3056 S TNF 3056	ETS 3056	325 384

[1] Only the basic bearing designation is listed. Other bearing variants can also fit the housing.
230(00) – spherical roller bearing, C... – CARB toroidal roller bearing
[2] The adapter sleeve fits the bearing in the same row only.
[3] The locating ring fits the bearing in the same row only. Two locating rings are required.

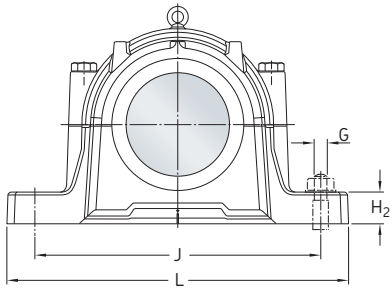

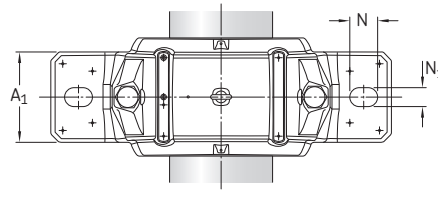

Shaft diameter d_a	**Dimensions** Housing A	A_1	C_a	D_a	H	H_1	H_2	J	L	N	N_1	G	**Eye bolt** according to DIN 580	**Mass** Housing
mm	mm												–	kg
150	210	160	87	260	322	160	60	450	530	42	35	30	M12	50,5
160	225	160	94	280	342	170	60	470	550	42	35	30	M12	58,5
170	235	160	95	290	347	170	60	470	550	42	35	30	M12	58,5
180	240	170	102	310	368	180	60	515	610	42	35	30	M12	76,0
200	260	190	110	340	403	200	70	580	690	50	42	36	M12	103
220	270	200	112	360	423	210	75	610	720	50	42	36	M12	117
240	290	220	124	400	475	240	80	680	820	70	48	42	M12	162
260	300	230	126	420	496	250	80	720	860	70	48	42	M12	184

4.2 SNLN 30 plummer block housings for bearings on a cylindrical seat
d **120 – 150** mm

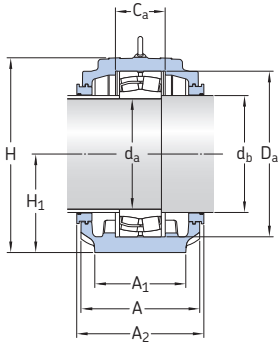

with TSN .. S

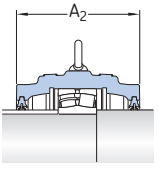

with TSN .. L

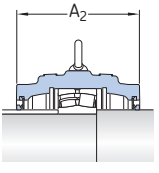

with TSN .. A

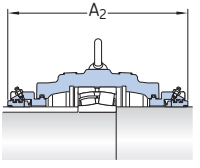

with TSN .. ND

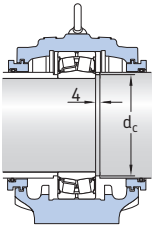

Shaft diameter d_a	**Housing** Designation	**Appropriate parts** Bearing[1]	Locating ring[2]	Seals	End cover	Width incl. seals A_2
mm	–	–				mm
120	**SNLN 3024**	23024 CC/W33 23024-2CS5 24024 CC/W33 24024-2CS5 C 3024 C 4024 V C 4024-2CS5V	FRB 12/180 FRB 12/180 FRB 5/180 FRB 5/180 FRB 12/180 FRB 5/180 FRB 5/180	TSN 224 L TSN 224 A TSN 224 S TSN 224 ND	ASNH 524-620	160 160 180 250
130	**SNLN 3026**	23026 CC/W33 23026-2CS5 24026 CC/W33 24026-2CS5 C 3026 C 4026 C 4026-2CS5V	FRB 13,5/200 FRB 13,5/200 FRB 5/200 FRB 5/200 FRB 13,5/200 FRB 5/200 FRB 5/200	TSN 226 L TSN 226 A TSN 226 S TSN 226 ND	ASNH 526	175 175 197 260
140	**SNLN 3028**	23028 CC/W33 23028-2CS5 24028 CC/W33 24028-2CS5 C 3028 C 4028 V C 4028-2CS5V	FRB 13/210 FRB 13/210 FRB 5/210 FRB 5/210 FRB 13/210 FRB 5/210 FRB 5/210	TSN 228 L TSN 228 A TSN 228 S TSN 228 ND	ASNH 528	175 175 194 260
150	**SNLN 3030**	23030 CC/W33 23030-2CS5 24030 CC/W33 24030-2CS5 C 3030 V C 4030 V C 4030-2CS5V	FRB 15/225 FRB 15/225 FRB 5,5/225 FRB 5,5/225 FRB 15/225 FRB 5,5/225 FRB 5,5/225	TSN 230 L TSN 230 A TSN 230 S TSN 230 ND	ASNH 530	190 190 213 280

[1] Only the basic bearing designation is listed. Other bearing variants can also fit the housing.
230(00), 240(00) – spherical roller bearing, C... – CARB toroidal roller bearing
[2] The locating ring fits the bearing in the same row only. Two locating rings are required.

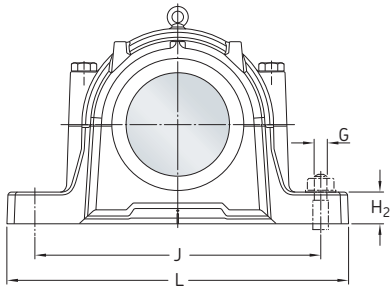

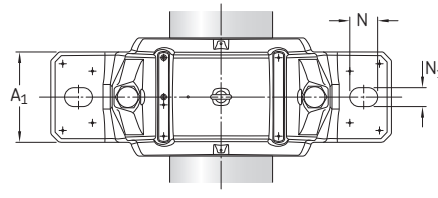

Shaft diameter				**Dimensions** Housing												**Eye bolt** according to DIN 580	**Mass** Housing
d_a	d_b	d_c[1] min	d_c[1] max	A	A_1	C_a	D_a	H	H_1	H_2	J	L	N	N_1	G		
mm				mm												–	kg
120	135	129	132	160	110	70	180	218	112	40	320	380	32	26	24	–	17,5
		129	130														
130	145			175	120	79	200	242	125	45	350	410	32	26	24	–	22,5
		139	140														
140	155			175	120	79	210	270	140	45	350	410	32	26	24	M10	30,0
		149	151														
150	165			190	130	86	225	290	150	50	380	445	35	28	24	M10	40,0
		161	162														

[1] Valid for the sealed spherical roller bearing in the same row only.

4.2 SNLN 30 plummer block housings for bearings on a cylindrical seat
d **160 – 280**mm

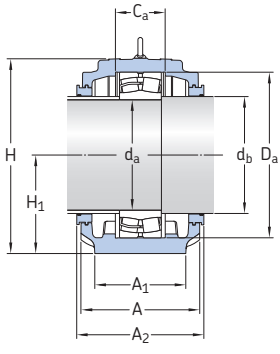

with TSN .. S

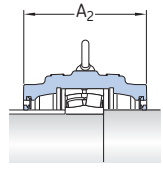

with TSN .. A

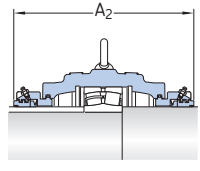

with TSN .. ND

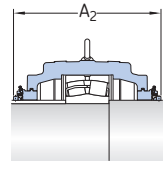

with TNF

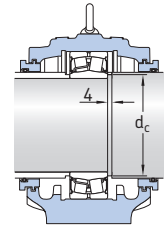

Shaft diameter d_a	**Housing** Designation	**Appropriate parts** Bearing[1]	Locating ring[2]	Seals	End cover	Width incl. seals A_2
mm	–	–				mm
160	**SNLN 3032**	23032 CC/W33 23032-2CS5 24032 CC/W33 24032-2CS5 C 3032 C 4032 C 4032-2CS5V	FRB 15/240 FRB 15/240 FRB 5/240 FRB 5/240 FRB 15/240 FRB 5/240 FRB 5/240	TSN 232 A TSN 232 S TSN 232 ND	ASNH 532	190 213 280
170	**SNLN 3034**	23034 CC/W33 23034-2CS5 C 3034	FRB 10/260 FRB 10/260 FRB 10/260	TSN 3034/185 S TNF 3034/185	ETS 3034	231 278
180	**SNLN 3036**	23036 CC/W33 23036-2CS5 C 3036	FRB 10/280 FRB 10/280 FRB 10/280	TSN 3036/195 S TNF 3036/195	ETS 3036	246 292
190	**SNLN 3038**	23038 CC/W33 C 3038	FRB 10/290 FRB 10/290	TSN 3038/205 S TNF 3038/205	ETS 3038	255 302
200	**SNLN 3040**	23040 CC/W33 23040-2CS5 C 3040	FRB 10/310 FRB 10/310 FRB 10/310	TSN 3040/215 S TNF 3040/215	ETS 3040	263 301
220	**SNLN 3044**	23044 CC/W33 23044-2CS5 C 3044	FRB 10/340 FRB 10/340 FRB 10/340	TSN 3044/235 S TNF 3044/235	ETS 3044	283 321
240	**SNLN 3048**	23048 CC/W33 23048-2CS5 C 3048	FRB 10/360 FRB 10/360 FRB 10/360	TSN 3048/255 S TNF 3048/255	ETS 3048	293 355
260	**SNLN 3052**	23052 CC/W33 23052-2CS5 C 3052	FRB 10/400 FRB 10/400 FRB 10/400	TSN 3052/275 S TNF 3052/275	ETS 3052	312 374
280	**SNLN 3056**	23056 CC/W33 C 3056	FRB 10/420 FRB 10/420	TSN 3056/295 S TNF 3056/295	ETS 3056	322 384

[1] Only the basic bearing designation is listed. Other bearing variants can also fit the housing.
230(00), 240(00) – spherical roller bearing, C... – CARB toroidal roller bearing
[2] The locating ring fits the bearing in the same row only. Two locating rings are required.

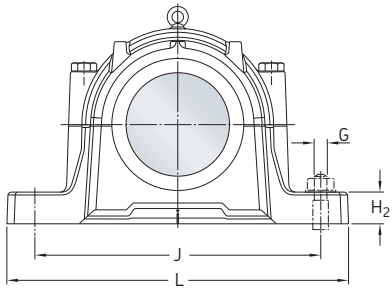

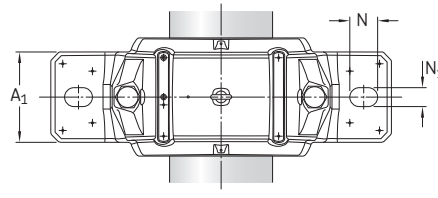

Shaft diameter				**Dimensions** Housing												**Eye bolt** according to DIN 580	**Mass** Housing
d_a	d_b	d_c[1] min	d_c[1] max	A	A_1	C_a	D_a	H	H_1	H_2	J	L	N	N_1	G		
mm				mm												–	kg
160	175			190	130	90	240	297	150	50	390	460	35	28	24	M10	41,0
		171	173														
170	185			210	160	87	260	322	160	60	450	530	42	35	30	M12	50,5
180	195			225	160	94	280	342	170	60	470	550	42	35	30	M12	58,5
190	205			235	160	95	290	347	170	60	470	550	42	35	30	M12	58,5
200	215			240	170	102	310	368	180	60	515	610	42	35	30	M12	76,0
220	235			260	190	110	340	403	200	70	580	690	50	42	36	M12	103
240	255			270	200	112	360	423	210	75	610	720	50	42	36	M12	117
260	275			290	220	124	400	475	240	80	680	820	70	48	42	M12	162
280	295			300	230	126	420	496	250	80	720	860	70	48	42	M12	184

[1] Valid for the sealed spherical roller bearing in the same row only.



Split plummer block housings SNL 30, 31 and 32 series

SNL plummer (pillow) block housings in the 30, 31 and 32 series are robust and suitable for tough operating conditions. They enable the incorporated bearings to achieve maximum service life with less need for maintenance. Different housing variants and seal designs are available, making the use of tailored housings virtually unnecessary and enabling cost-effective bearing arrangements to be made.

Bearing types
- Spherical roller bearings
- CARB toroidal roller bearings

Bearing dimension series
- 30, 31, 32
- 22, 23, 40 (for some bearings)

Shaft diameter range
- 115 to 530 mm
- 4 7/16 to 19 1/2 in.

Typical shaft-bearing combinations
- Plain shaft with bearing on an adapter sleeve
- Stepped shaft with bearing on a cylindrical seat

Seals
- Labyrinth
- Heavy-duty
- Oil seal

Lubrication
- Grease
- Oil

Materials
- Grey cast iron
- Spheroidal graphite cast iron

Mounting
- Four-bolt mounting

Compliance to standards
- ISO 113 (four-bolt plummer block housings)

Supersedes
- SD, SDD series

Split plummer block housings SNL 30, 31 and 32 series

Designations **191**

Standard housing design **193**
Features and benefits 194
Housing material 195
Paint, corrosion protection 195
Dimension standards 195
Interchangeability 195

Housing variants **196**
Housing material 196
Bearing seat tolerance 196
Housings for oil lubrication 196

Sealing solutions **196**
Labyrinth seals 198
Taconite heavy-duty seals 198
Seals for oil lubrication 198
End covers 198

Using sealed bearings **200**

Special seals **200**
Seals for large axial movements 200
Custom seals 200

Design considerations **203**
Typical shaft-bearing arrangements . . . 203
Locating and non-locating bearing positions 204
Load carrying capacity 204
Operating temperature 212
Operating speed 212
Attachment bolt recommendations 212

Lubrication **212**
Initial grease fill 212
Relubrication 213
Oil lubrication 215

Mounting **219**
Torque specifications 219
Pinning or supporting the housing 219

Condition monitoring **220**

Accessories **221**

Ordering information **221**

Product tables
5.1 Large SNL plummer block housings for bearings on an adapter sleeve, metric shafts 222
5.2 Large SNL plummer block housings for bearings on an adapter sleeve, inch shafts 260
5.3 Large SNL plummer block housings for bearings on a cylindrical seat . . 302

Designations

Designation system for SNL plummer block housings

SNLD 3134 SN

Series

SNL	Standard plummer block housing

Material

–	Grey cast iron
D	Spheroidal graphite cast iron

Size identification

30(00)	Housing for bearings in the 30 dimension series
31(00)	Housing for bearings in the 31 dimension series
32(00)	Housing for bearings in the 32 dimension series
..34 to 96	Size code, related to the bearing bore size
../500 to /530	Size code, related to the bearing bore size

Suffixes[1)]

–	Housing for bearings on an adapter sleeve and a plain shaft
G	Housing for bearings on a cylindrical seat and a stepped shaft
L	Housing for a non-locating bearing arrangement
F	Housing for a locating bearing arrangement
TURT	Housing prepared for oil lubrication, including seals, for use with spherical roller bearings
TURA	Housing prepared for oil lubrication, including seals, for use with CARB toroidal roller bearings
TURP	Housing with seals for circulating oil lubrication systems and large axial shaft movements
V	Housing with a grease escape hole in the base
T	Drilled and tapped hole 1/8-27 NPSF at one side of the housing cap (opposite the lock nut) for a grease fitting
TD	Drilled and tapped hole 1/8-27 NPSF at both sides of the housing cap for a grease fitting
SN	Drilled and tapped M8 hole for sensors

[1)] When multiple suffixes are used, they are listed in the same order as shown here.

Split plummer block housings SNL 30, 31 and 32 series

Designation system for seals

TS 38
TNF 88/380

Series

TS	Labyrinth seal
TNF	Taconite seal
TSD	Seal for oil lubrication

Size identification

34 to 96	Size code, related to the bearing bore size
500 to 560	Size code, related to the bearing bore size
/...	Bore diameter of the seal [mm] when differing from the standard

Designation system for end covers

ETS 34
ETS 3184 R

Series

ETS	End cover for SNL plummer block housings in the 30, 31 and 32 series

Size identification

...	Size code, related to bearing or housing size

Suffix

R	End cover for oil lubricated housings

Designation system for locating rings

FRB 12/360

Series

FRB	Locating ring for SKF bearing housings

Size identification

...	Width and outside diameter of the locating ring [mm]

Standard housing design

SNL plummer (pillow) block housings in the 30, 31 and 32 series, often referred to as “large SNL plummer block housings”, are split housings consisting of a cap and base (→ **fig. 1**). They have four holes cast into the base for attachment bolts. The housings are designed on the “building block” principle to enable a wider choice of bearings and seals as well as a variety of shaft-bearing combinations and lubrication methods.

Fig. 1

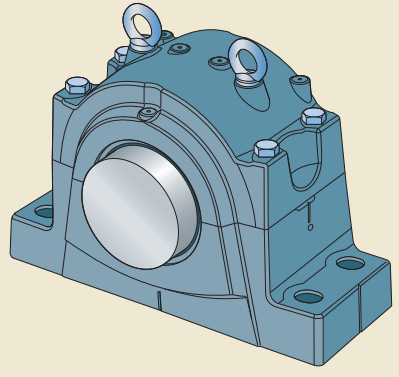

Features and benefits

SNL plummer block housings in the 30, 31 and 32 series have the following features and benefits:

Stiff housing

The housing base is reinforced with ribs and has extra material surrounding the holes for the attachment bolts (→ **fig. 2**). This virtually eliminates any distortion of the base and bearing seat during tightening of the attachment bolts.

Good heat dissipation

The centre cross reinforcement in the housing base (→ **fig. 3**) increases the contact area between the housing base and the support surface to improve the heat flow from the bearing outer ring to the support surface.

Caps and bases individually marked

The housing cap and base are matched during manufacture and are not interchangeable with the caps and bases of other housings. To prevent any mismatches, a unique serial number is marked on both the housing cap and the base (→ **fig. 4**).

Dimples to locate accessories

Dimples cast into the housing cap indicate where grease fittings and condition monitoring sensors can be mounted for maximum effectiveness (→ **fig. 5**).

Simple mounting

To simplify mounting and make alignment more accurate, lines indicating the centre of the bearing seat and housing bore axis are cast into the housing base. Dimples indicate the position for dowel pins (→ **fig. 6**). Mounting instructions are supplied with each seal pack. The housings have two eyebolts on the cap for safe and easy handling.

Fig. 2

Reinforcement rib in the base

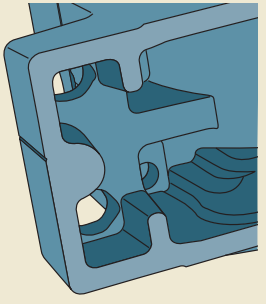

Fig. 3

Centre cross for better heat conduction

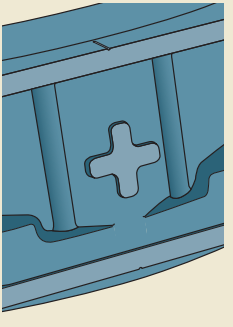

Fig. 4

Individually marked cap and base

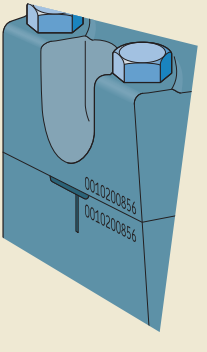

Fig. 5

Dimples indicate positions for accessories

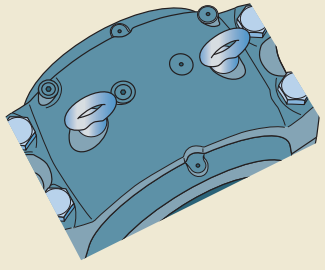

Fig. 6

Cast indications mark the centre of the housing bore

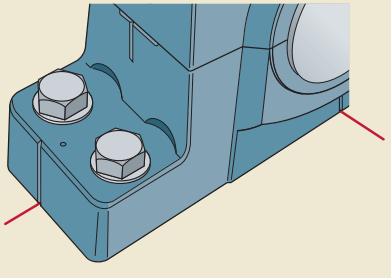

Housing material

SNL plummer block housings are made of grey cast iron.

Paint, corrosion protection

SNL housings are painted black (RAL 9005) using a water based alkyd/acryl paint. The paint protects the housing in accordance with ISO 12944-2, corrosivity category C2 (i.e. exterior atmospheres with low level of pollution, interior atmospheres where condensation may occur). The paint is not affected by most lubricating or engine oils, cutting fluids or alkalescent washing chemicals. Housings can be repainted with most water or solvent based 1- or 2-component paints.

Unpainted surfaces are protected by a solventless rust inhibitor.

Dimension standards

Where applicable, boundary dimensions are in accordance with ISO 113 for four-bolt plummer block housings. ISO 113 applies to housings with a bearing seat diameter $D_a \leq 540$ mm.

Interchangeability

SNL plummer block housings in the 31 series are dimensionally interchangeable with the earlier SD housings.

SNL housings in the 30 and 32 series are dimensionally interchangeable with the earlier SD housings, except for the bearing position. The offset of the bearing centre compared to the centre of the housing differs (dimension s, → **product tables**).

Housing variants

In addition to standard design SNL housings, a number of variants are also available. Variants include housings made of different materials, different bearing seat tolerance classes and modifications for special applications.

Housing material

For applications where extra strength is needed, SNL housings are also available in spheroidal graphite cast iron.

Bearing seat tolerance

SNL housings can be supplied with different bearing seat tolerance classes, e.g. for applications prone to vibration, with rotating outer ring load or for applications operating at high temperatures.

For additional information, contact the SKF application engineering service.

Housings for oil lubrication

SNL housings in the 30, 31 and 32 series can be used for oil lubrication at relatively high speeds. When they are to be used for oil lubrication, the housings are modified to accommodate the special oil seals. As a result, large SNL housings for oil lubrication are supplied together with the seals, as a unit.

Sealing solutions

SNL plummer (pillow) block housings in the 30, 31 and 32 series are available with different standard sealing solutions (→ **fig. 7**):

- labyrinth seals (TS ..)
- taconite heavy-duty seals (TNF ..)
- seals for oil lubrication (TSD .. U)
- end covers (ETS ..)

Table 1 provides an overview of the characteristics and suitability of each sealing solution. Details are provided in the following text. This information should be used as a guideline and does not substitute for testing a seal in its application.

Fig. 7

Standard sealing solutions for large SNL plummer block housings

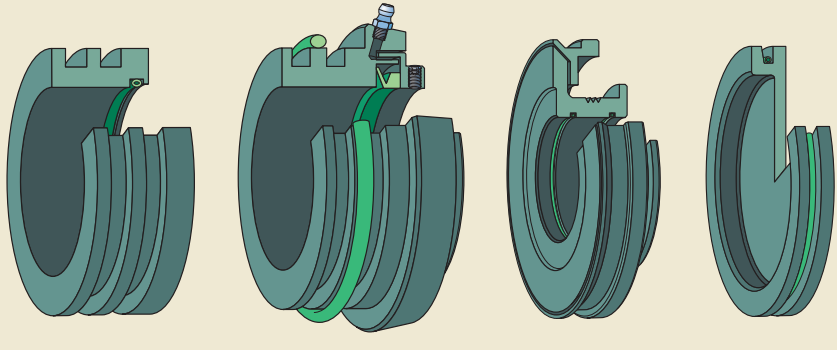

Labyrinth seal TS ..

Taconite heavy-duty seal TNF ..

Seal for oil lubrication TSD .. U

End cover ETS ..

Table 1

Standard seals for large SNL plummer block housings

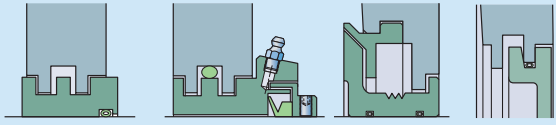

Seal				
Type	Labyrinth	Taconite	Oil	End cover
Designation	TS ..	TNF ..	TSD .. U[1]	ETS ..
Material	steel, silicone	steel, nitrile rubber	steel,silicone	steel, silicone
Seals per pack	1 seal	1 seal	1 seal	1 end cover
Application conditions and requirements				
Temperature [°C]	–50 to +200	–40 to +100	–50 to +200	–50 to +200
Temperature [°F]	–60 to +390	–40 to +210	–60 to +390	–60 to +390
Max. circumferential speed [m/s]	not limited	12	not limited	n/a
Max. misalignment [°]	≤ 0,3°	≤ 0,3°	≤ 0,3°	n/a
Low friction	++	+	++	n/a
Axial shaft displacement	+	+	+	n/a
Vertical shaft arrangement	––	–	––	++
Grease relubrication	+	+	n/a	++
Oil lubrication	––	–	++	n/a
Replacement	–	–	–	++
Shaft tolerance class	h9Ⓔ	h9Ⓔ	h9Ⓔ	n/a
Shaft roughness R_a [µm]	3,2	3,2	3,2	n/a
Sealing suitability				
Dust	–	++	+	++
Fine particles	+	++	+	++
Coarse particles	+	++	+	++
Chips	++	++	++	++
Liquids when sprayed	––	++	–	++
Direct sunlight	++	++	++	++

Symbols: n/a not applicable, ++ very suitable, + suitable, – limited suitability, –– unsuitable

[1] The designation is valid for ordering spare parts. The oil seals are supplied together with the housing.

Labyrinth seals

For applications where there are high speeds or extreme temperatures, SKF recommends using labyrinth seals. Labyrinth rings, mounted on the shaft, form a multi-stage labyrinth seal with the housing seal grooves. A hollow, silicone rubber cord, supplied with the ring, holds the ring in place on the shaft.

Taconite heavy-duty seals

For shaft-bearing combinations that must operate under highly contaminated conditions, such as those encountered in mining, taconite heavy-duty seals, which can be filled with grease, are recommended. Grease enhances the sealing effect and extends the service life of the seals.

Taconite heavy-duty seals are labyrinth seals combined with a V-ring seal. The inner ring of the labyrinth seal is solid but the outer ring is split. They can be relubricated via a grease fitting in the main body of the seal.

The axial movement of the shaft relative to the housing is limited to ± 2 mm for shaft diameters up to 200 mm and ± 4 mm for larger shaft diameters.

Seals for oil lubrication

Seals for oil bath and circulating oil lubrication systems require a modified housing, and are therefore supplied together with the housing (→ **fig 8**).

Fig. 8

Housing for oil lubrication

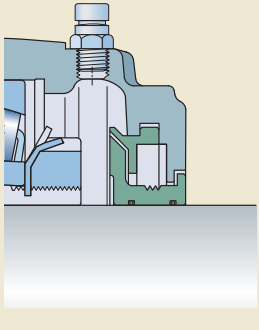

The oil seals consist of a stationary part, which is fitted in the housing, and a labyrinth ring that rotates with the shaft. The labyrinth ring is held in place by two hollow silicone rubber cords, which also help to prevent oil leakage.

SNL housings with oil seals are identified by the designation suffix TURT for spherical roller bearings and TURA for CARB toroidal roller bearings. The seal by itself is designated TSD .. U.

SNL housings for inch shafts can also be used for oil lubrication. For additional information, contact the SKF application engineering service.

End covers

Housings at the end of a shaft should have an end cover that fits into the seal groove in the housing.

End covers, which are made of grey cast iron, are installed with a hollow, silicone rubber cord that holds the cover in place. End covers are available in two variants, one for grease lubrication and one for oil lubrication.

Details of the permissible length of the shaft end are listed in **table 2** on **page 199**.

Table 2

Permissible length of a shaft end

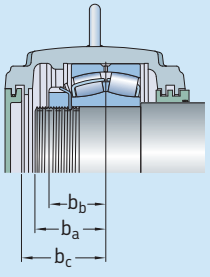

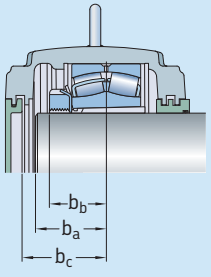

Housing Size	Bearing	Dimensions b_a min	b_a max[1]	b_b	b_c
–	–	mm			
SNL 3036	23036	72	102	66,5	107,5
	24036	85	102	79,5	107,5
SNL 3038	23038	73	108	68	113,5
	24038	86	108	80,5	113,5
SNL 3040	23040	78	112	72,5	117,5
	24040	91	112	86	117,5
SNL 3044	23044	91	122	86	127,5
	24044	105	122	100	127,5
SNL 3048	23048	97	128	92	133,5
	24048	110	128	105	133,5
SNL 3052	23052	103	136	98	141,5
	24052	121	136	116	141,5
SNL 3056	23056	108	146	103	151,5
	24056	125	146	120	151,5
SNL 3060	23060	118	149	113	154,5
	24060	139	149	134	154,5
SNL 3064	23064	121	170	115,5	175,5
	24064	140	170	135	175,5
SNL 3068	23068	130	181	124,5	186,5
	24068	153	181	148	186,5
SNL 3072	23072	130	181	125	186,5
	24072	153	181	148	186,5
SNL 3076	23076	134,5	197	129,5	202,5
	24076	157	197	152	202,5
SNL 3080	23080	145	203	140	208,5
	24080	171	203	166	208,5
SNL 3084	23084	146	203	141	208,5
	24084	171	203	166	208,5
SNL 3088	23088	160,5	218	155,5	223,5
	24088	188	218	183	223,5
SNL 3092	23092	163,5	238	158,5	243,5
	24092	191	238	186	243,5
SNL 3096	23096	164,5	238	159,5	243,5
	24096	191	238	186	243,5
SNL 30/500	230/500	173,5	238	168,5	243,5
	240/500	199	238	194	243,5
SNL 30/530	230/530	187,5	243	182,5	248,5
	240/530	220	243	215	248,5

Housing Size	Bearing	Dimensions b_a min	b_a max[1]	b_b	b_c
–	–	mm			
SNL 3134	23134	78	102	73	107,5
SNL 3136	23136	83	108	78	113,5
SNL 3138	23138	88	112	83	117,5
SNL 3140	23140	93	122	88	127,5
SNL 3144	23144	100	128	95	133,5
SNL 3148	23148	106	136	101	141,5
SNL 3152	23152	116	146	111	151,5
SNL 3156	23156	119	149	114	154,5
SNL 3160	23160	138	170	133	175,5
SNL 3164	23164	149	181	144	186,5
SNL 3168	23168	172	197	167	202,5
SNL 3172	23172	176	203	171	208,5
SNL 3176	23176	179	203	174	208,5
SNL 3180	23180	187	218	182	223,5
SNL 3184	23184	207	238	202	243,5
SNL 3188	23188	208	238	203	243,5
SNL 3192	23192	220	243	215	248,5
SNL 3196	23196	224	243	219	248,5
SNL 3234	23234	78	112	73	117,5
SNL 3236	23236	91	112	86	117,5
SNL 3238	23238	96	122	91	127,5
SNL 3240	23240	101	128	96	133,5
SNL 3244	23244	112	136	107	141,5
SNL 3248	23248	122	146	117	151,5
SNL 3252	23252	131	170	126	175,5
SNL 3256	23256	134	170	129	175,5
SNL 3260	23260	154	181	149	186,5
SNL 3264	23264	165	197	160	202,5
SNL 3268	23268	189	203	184	208,5
SNL 3272	23272	196	218	191	223,5
SNL 3276	23276	202	238	197	243,5
SNL 3280	23280	215	238	210	243,5
SNL 3284	23284	231	243	226	248,5
SNL 3288	23288	235	243	230	248,5

[1] For non-locating bearing arrangements, the values for b_a must be adjusted if the bearing is not centred in the housing seat.

Using sealed bearings

Using sealed bearings in housings with standard seals is a good solution for highly contaminated environments. The sealed bearing together with the housing seal and grease provide three layers of protection (→ *SKF three-barrier solution*, **page 39**).

SNL housing seals in the 30, 31 and 32 series can be used together with sealed, self-aligning SKF bearings. When using taconite heavy-duty seals, a sealed bearing does not enhance the sealing effect during operation, but still protects the bearing against contaminants during mounting.

Special seals

In addition to the standard seal assortment, SNL housings in the 30, 31 and 32 series are also available with seals for large axial movements. Custom seals for special applications are also available on request.

Seals for large axial movements

Large SNL housings are available with seals that can accommodate large axial movements, a typical requirement of drying cylinders and felt rolls in paper machines. The double labyrinth seals are designed for circulating oil lubrication systems. The seals are fitted in a modified housing, designation suffix TURP, and are always supplied together with the housing.

SNL ... TURP housings are suitable for spherical roller and CARB toroidal roller bearings in the 30 and 31 dimension series from size 3036 to 30/530 and 3134 to 3196.

Fig. 9

Seal for large axial movements

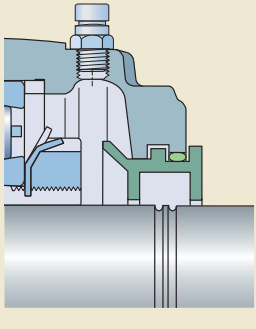

Custom seals

SNL housings in the 30, 31 and 32 series can be equipped with any type of seal that fits the seal groove dimensions in the housing. The relevant dimensions are provided in **tables 3** and **4** on **pages 201** and **202**.

If custom seals are to be used, SKF recommends ordering housings in the SNL .. G series. Housings in the SNL .. G series have larger bores at the front and back of the housing and can accommodate a wider choice of seal designs.

Table 3

Seal groove dimensions

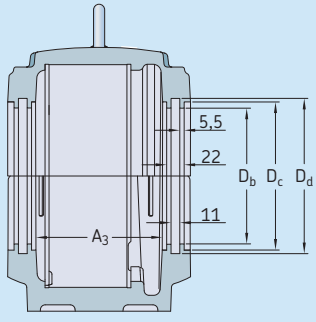

Housing Size	Dimensions A_3	D_b	D_c	D_d
–	mm			
SNL 3036	158	181,2	196,4	205,2
SNL 3038	168	191,4	206,4	215,4
SNL 3040	186	201,4	216,4	225,4
SNL 3044	206	221,4	236,4	245,4
SNL 3048	214	241,4	256,4	265,4
SNL 3052	231	261,6	276,6	285,6
SNL 3056	249	281,6	296,6	305,6
SNL 3060	249	301,6	316,6	325,6
SNL 3064	279	321,8	336,8	345,8
SNL 3068	299	342,4	357,4	366,4
SNL 3072	297	362,4	377,4	386,4
SNL 3076	328	382,4	397,4	406,4
SNL 3080	328	402,8	417,8	426,8
SNL 3084	328	422,8	437,8	446,8
SNL 3088	358	442,8	457,8	466,8
SNL 3092	388	463	478	487
SNL 3096	388	483	498	507
SNL 30/500	388	503	518	527
SNL 30/530	398	533	548	557
SNL 3134	159	171,2	186,4	195,2
SNL 3136	169	181,2	196,4	205,2
SNL 3138	187	191,4	206,4	215,4
SNL 3140	207	201,4	216,4	225,4
SNL 3144	215	221,4	236,4	245,4
SNL 3148	231	241,4	256,4	265,4
SNL 3152	249	261,6	276,6	285,6
SNL 3156	249	281,6	296,6	305,6
SNL 3160	280	301,6	316,8	325,6
SNL 3164	300	321,8	336,8	345,8
SNL 3168	328	342,4	357,4	366,4
SNL 3172	328	362,4	377,4	386,4

Housing Size	Dimensions A_3	D_b	D_c	D_d
–	mm			
SNL 3176	328	382,4	397,4	406,4
SNL 3180	358	402,8	417,8	426,8
SNL 3184	388	422,8	437,8	446,8
SNL 3188	388	442,8	457,8	466,8
SNL 3192	398	463	478	487
SNL 3196	398	483	498	507
SNL 3234	186	201,4	216,4	225,4
SNL 3236	187	191,4	206,4	215,4
SNL 3238	207	201,4	216,4	225,4
SNL 3240	214	241,4	256,4	265,4
SNL 3244	231	241,4	256,4	265,4
SNL 3248	249	261,6	276,6	285,6
SNL 3252	279	321,8	336,8	345,8
SNL 3256	280	301,6	316,8	325,6
SNL 3260	300	321,8	336,8	345,8
SNL 3264	328	342,4	357,4	366,4
SNL 3268	328	382,4	397,4	406,4
SNL 3272	358	402,8	417,8	426,8
SNL 3276	388	463	478	487
SNL 3280	388	442,8	457,8	466,8
SNL 3284	398	463	478	487
SNL 3288	398	483	498	507

Table 4

Seal groove dimensions for SNL .. G housings

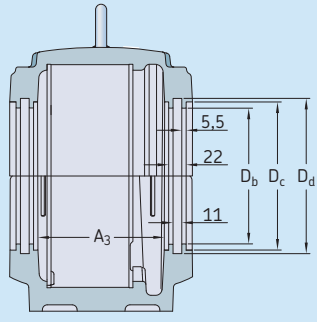

Housing Size	Dimensions A_3	D_b	D_c	D_d
–	mm			
SNL 3036 G	156	221,4	236,4	245,4
SNL 3038 G	166	221,4	236,4	245,4
SNL 3040 G	184	241,4	256,4	265,4
SNL 3044 G	203	261,6	276,6	285,6
SNL 3048 G	211	281,6	296,6	305,6
SNL 3052 G	228	301,6	316,8	325,6
SNL 3056 G	247	321,8	336,8	345,8
SNL 3060 G	247	342,4	357,4	366,4
SNL 3064 G	277	362,4	377,4	386,4
SNL 3068 G	295	382,4	397,4	406,4
SNL 3072 G	293	402,8	417,8	426,8
SNL 3076 G	325	422,8	437,8	446,8
SNL 3080 G	325	463	478	487
SNL 3084 G	325	483	498	507
SNL 3088 G	354	503	518	527
SNL 3092 G	384	533	548	557
SNL 3096 G	384	533	548	557
SNL 30/500 G	384	563	578	587
SNL 30/530 G	392	603	618	627
SNL 3134 G	157	201,4	216,4	225,4
SNL 3136 G	166	221,4	236,4	245,4
SNL 3138 G	185	221,4	236,4	245,4
SNL 3140 G	204	241,4	256,4	265,4
SNL 3144 G	213	261,6	276,6	285,6
SNL 3148 G	230	281,6	296,6	305,6
SNL 3152 G	248	301,6	316,8	325,6
SNL 3156 G	248	321,8	336,8	345,8
SNL 3160 G	278	342,4	357,4	366,4
SNL 3164 G	297	362,4	377,4	386,4
SNL 3168 G	325	382,4	397,4	406,4
SNL 3172 G	325	402,8	417,8	426,8

Housing Size	Dimensions A_3	D_b	D_c	D_d
–	mm			
SNL 3176 G	325	422,8	437,8	446,8
SNL 3180 G	354	463	478	487
SNL 3184 G	384	483	498	507
SNL 3188 G	384	503	518	527
SNL 3192 G	395	533	548	557
SNL 3196 G	394	563	578	587
SNL 3234 G	186	201,4	216,4	225,4
SNL 3236 G	185	221,4	236,4	245,4
SNL 3238 G	204	241,4	256,4	265,4
SNL 3240 G	214	241,4	256,4	265,4
SNL 3244 G	230	281,6	296,6	305,6
SNL 3248 G	248	301,6	316,8	325,6
SNL 3252 G	279	321,8	336,8	345,8
SNL 3256 G	278	341,8	356,8	365,8
SNL 3260 G	297	361,8	376,8	385,8
SNL 3264 G	325	382,4	397,4	406,4
SNL 3268 G	328	382,4	397,4	406,4
SNL 3272 G	358	402,8	417,8	426,8
SNL 3276 G	387	463	478	487
SNL 3280 G	386	503	518	527
SNL 3284 G	393	533	548	557
SNL 3288 G	392	563	578	587

Design considerations

For general information about system design, refer to the following sections:

- *Typical shaft-bearing combinations* (→ **page 41**)
- *Locating/non-locating bearing arrangements* (→ **page 40**)
- *Load carrying capacity* (→ **page 44**)
- *Axial load carrying capacity for bearings on sleeves* (→ **page 44**)
- *Specifications for shafts and housing support surfaces* (→ **page 45**)

For additional information about rolling bearings and adapter sleeves, refer to the product information available online at skf.com/bearings.

Typical shaft-bearing combinations

SNL housings in the 30, 31 and 32 series can accommodate different shaft-bearing combinations (→ **fig. 10**):

- plain shaft with bearing on an adapter sleeve
- stepped shaft with bearing on a cylindrical seat
- stepped shaft with bearing on a withdrawal sleeve

Plain shaft with bearing on an adapter sleeve

Housings, appropriate parts and dimensions are listed in **product tables 5.1** and **5.2**, starting on **pages 222** and **260** respectively.

Stepped shaft with bearing on a cylindrical seat

Housings, appropriate parts and dimensions are listed in **product table 5.3**, starting on **page 302**.

The bearing is located axially between a shaft shoulder and a spacer sleeve, which is held in place by another component on the shaft. The outside diameter of the sleeve must match the bore diameter of the seal. The sleeve is not supplied by SKF.

Stepped shaft with bearing on a withdrawal sleeve

When using an SNL housing for this arrangement, the withdrawal sleeve must be located axially on the shaft. This can be done using a spacer sleeve that is held in place by another component. Using a lock nut can be difficult because of the limited space in the housing. The outside diameter of the spacer sleeve must match the bore diameter of the seal. The spacer sleeve is not supplied by SKF.

Fig. 10

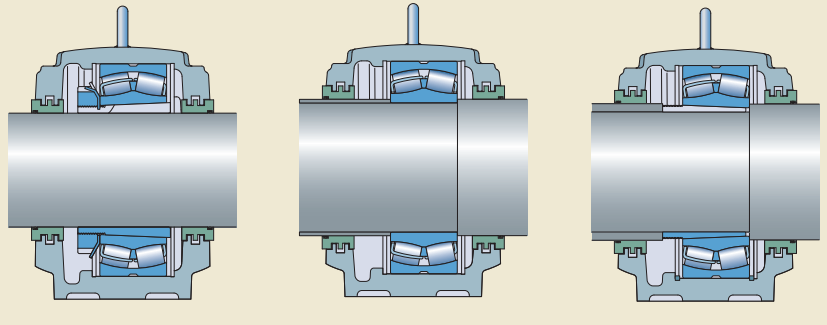

Plain shaft with bearing on an adapter sleeve

Stepped shaft with bearing on a cylindrical seat

Stepped shaft with bearing on a withdrawal sleeve

Locating and non-locating bearing positions

SNL housings can be used for both the locating and non-locating bearing positions.

For smaller sizes, the housings are machined standard for bearings in the non-locating position. Bearings in the locating position as well as CARB toroidal roller bearings must be secured in the housing on both sides with locating rings. Appropriate locating rings are listed in the product tables.

Housings from sizes 3076, 3168 and 3264 upwards are supplied in two designs:

- Housings with the suffix F have a bearing seat that matches the bearing width. These housings should be used for spherical roller bearings in the locating position and CARB toroidal roller bearings.
- Housings with the suffix L have a bearing seat that is wider than the bearing. These housings should be used for spherical roller bearings in the non-locating position. The possible axial displacement is at least 20 mm.

Load carrying capacity

SNL housings are intended for loads acting perpendicularly toward the support surface. If the housing is supported over its entire base and the loads are purely perpendicular, loads are limited only by the bearing. If loads acting in other directions occur, or if the housing is not supported over its entire base, be sure that the magnitude of the load is permissible for the housing, the cap bolts and the attachment bolts. When housings are subjected to cyclic loads or dynamic imbalance, contact the SKF application engineering service.

Breaking loads and safety factors

Guideline values for the breaking loads P for housings made of grey cast iron are listed in **table 5** on **page 205**.

To obtain the permissible load for a housing, the appropriate breaking load value should be divided by a factor based on the safety requirements. In general engineering, a safety factor of 6 is typical (→ *Load carrying capacity*, **page 44**).

The permissible load can only be exploited if the cap bolts are tightened at least to the torque values listed in **table 7** on **page 210**.

The limits for $P_{0°}$ apply only when the housing is not supported over its entire base.

The load P_a is the axial breaking load of the housing. If the incorporated bearing is mounted on a sleeve, check the permissible axial load for the sleeve.

For housings made of spheroidal graphite cast iron, the values obtained from **tables 5** and **6** should be multiplied by a factor of 1,8.

Safe loads

In some countries, safe loads are used instead of breaking loads. Approximate safe loads are listed in **table 6** on **page 207**. These guideline values have been established using accepted engineering practices, taking safety, ultimate tensile strength of the materials and working stresses into account. They reflect a safety factor of 5 against fracture, and a minimum factor of 2 against cap bolt yield.

Additional housing support

When the housing is subjected to loads acting parallel to the support surface, it may be necessary to pin the housing to the support surface or to provide a stop to counter the load. When loads act at angles between 55° and 120°, or when the axial loads are greater than 5% of $P_{180°}$ (→ **table 6** on **page 207**), the housing should be pinned to the support surface or a stop should be provided to counter the load. The dowel pins or stop should be sufficiently strong to accommodate the loads acting parallel to the support surface.

Recommendations for the position and size of the holes to accommodate dowel pins are provided in **table 11** on **page 219**.

Table 5

Breaking loads for large SNL plummer block housings made of grey cast iron

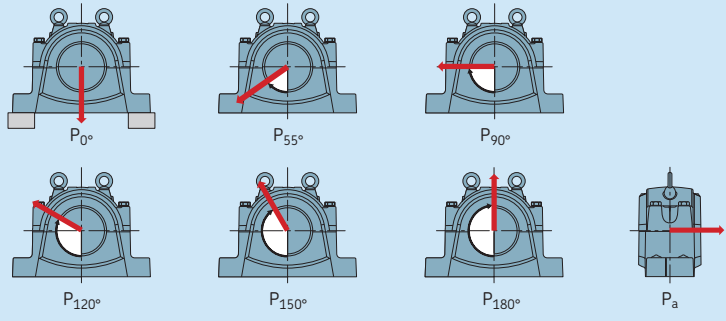

Housing Size	Breaking loads $P_{0°}$	$P_{55°}$	$P_{90°}$	$P_{120°}$	$P_{150°}$	$P_{180°}$	P_a
–	kN						
SNL 3036	1 700	2 100	1 000	760	680	850	550
SNL 3038	1 900	2 400	1 150	850	760	950	620
SNL 3040	2 200	2 700	1 300	1 000	880	1 100	710
SNL 3044	2 600	3 200	1 600	1 100	1 000	1 300	840
SNL 3048	3 100	4 000	1 900	1 400	1 300	1 600	1 000
SNL 3052	3 400	4 200	2 000	1 500	1 400	1 700	1 100
SNL 3056	3 800	4 700	2 300	1 700	1 500	1 900	1 200
SNL 3060	4 000	5 000	2 400	1 800	1 600	2 000	1 300
SNL 3064	4 800	6 000	2 900	2 200	1 900	2 400	1 500
SNL 3068	5 400	7 000	3 400	2 500	2 200	2 800	1 800
SNL 3072	5 400	7 000	3 400	2 500	2 200	2 800	1 800
SNL 3076	6 000	7 500	3 600	2 600	2 300	3 000	1 900
SNL 3080	6 000	7 700	3 600	2 700	2 400	3 000	2 000
SNL 3084	6 100	8 000	3 900	2 900	2 500	3 200	2 100
SNL 3088	7 000	8 700	4 200	3 100	2 700	3 500	2 200
SNL 3092	7 600	9 600	4 600	3 400	3 000	3 800	2 400
SNL 3096	7 600	9 600	4 600	3 400	3 000	3 800	2 400
SNL 30/500	8 000	10 000	4 800	3 600	3 100	4 000	2 500
SNL 30/530	8 000	11 200	5 400	4 000	3 500	4 400	2 800
SNL 3134	1 700	2 100	1 000	760	680	850	550
SNL 3136	1 900	2 400	1 150	850	760	950	620
SNL 3138	2 200	2 700	1 300	1 000	880	1 100	710
SNL 3140	2 600	3 200	1 600	1 100	1 000	1 300	840
SNL 3144	3 100	4 000	1 900	1 400	1 300	1 600	1 000
SNL 3148	3 400	4 200	2 000	1 500	1 400	1 700	1 100
SNL 3152	3 800	4 700	2 300	1 700	1 500	1 900	1 200
SNL 3156	4 000	5 000	2 400	1 800	1 600	2 000	1 300
SNL 3160	4 800	6 000	2 900	2 200	1 900	2 400	1 500
SNL 3164	5 400	7 000	3 400	2 500	2 200	2 800	1 800
SNL 3168	6 000	7 500	3 600	2 600	2 300	3 000	1 900
SNL 3172	6 000	7 700	3 600	2 700	2 400	3 000	2 000

continues on next page

cont. Table 5

Breaking loads for large SNL plummer block housings made of grey cast iron

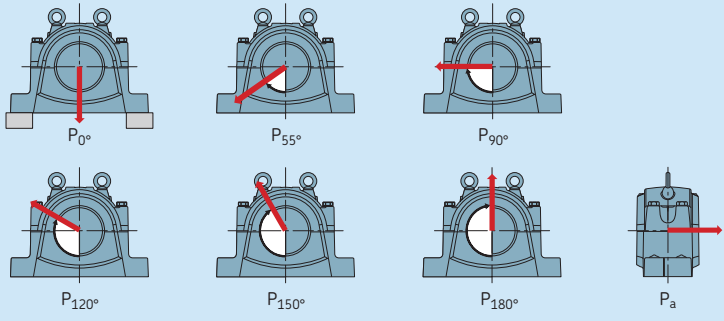

Housing Size	Breaking loads $P_{0°}$	$P_{55°}$	$P_{90°}$	$P_{120°}$	$P_{150°}$	$P_{180°}$	P_a
–	kN						
SNL 3176	6 100	8 000	3 900	2 900	2 500	3 200	2 100
SNL 3180	7 000	8 700	4 200	3 100	2 700	3 500	2 200
SNL 3184	7 600	9 600	4 600	3 400	3 000	3 800	2 400
SNL 3188	8 000	10 000	4 800	3 600	3 100	4 000	2 500
SNL 3192	8 400	10 700	5 200	3 800	3 300	4 200	2 700
SNL 3196	8 800	11 200	5 400	4 000	3 500	4 400	2 800
SNL 3234	2 200	2 700	1 300	1 000	880	1 100	710
SNL 3236	2 200	2 700	1 300	1 000	880	1 100	710
SNL 3238	2 600	3 200	1 600	1 100	1 000	1 300	840
SNL 3240	3 100	4 000	1 900	1 400	1 300	1 600	1 000
SNL 3244	3 400	4 200	2 000	1 500	1 400	1 700	650
SNL 3248	3 800	4 700	2 300	1 700	1 500	1 900	670
SNL 3252	4 800	6 000	2 900	2 200	1 900	2 400	1 150
SNL 3256	4 800	6 000	2 900	2 200	1 900	2 400	1 200
SNL 3260	5 400	7 000	3 400	2 500	2 200	2 800	1 600
SNL 3264	6 000	7 500	3 600	2 600	2 300	3 000	1 450
SNL 3268	6 100	8 000	3 900	2 900	2 500	3 200	1 850
SNL 3272	7 000	8 700	4 200	3 100	2 700	3 500	1 600
SNL 3276	7 600	9 600	4 600	3 400	3 000	3 800	2 100
SNL 3280	8 000	10 000	4 800	3 600	3 100	4 000	2 400
SNL 3284	8 400	10 700	5 200	3 800	3 300	4 200	2 600
SNL 3288	8 800	11 200	5 400	4 000	3 500	4 400	2 700

Table 6

Safe loads for large SNL plummer block housings made of grey cast iron

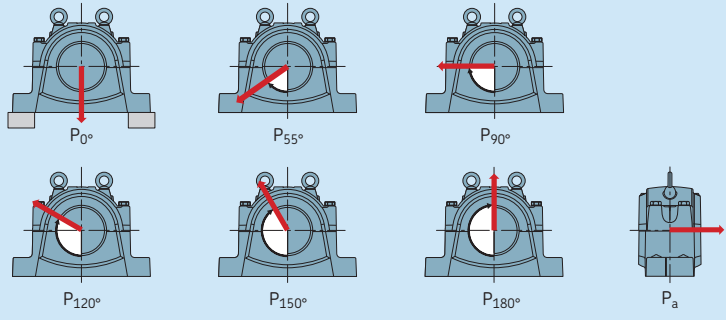

Housing Size	Safe loads[1] $P_{0°}$	$P_{55°}$	$P_{90°}$	$P_{120°}$	$P_{150°}$	$P_{180°}$	P_a
–	kN / *lbf.*						
SNL 3036	340	420	200	152	136	170	110
	76 500	*94 500*	*45 000*	*34 200*	*30 600*	*38 250*	*24 750*
SNL 3038	380	480	230	170	152	190	124
	85 500	*108 000*	*51 750*	*38 250*	*34 200*	*42 750*	*27 900*
SNL 3040	440	540	260	200	176	220	142
	99 000	*121 500*	*58 500*	*45 000*	*39 600*	*49 500*	*31 950*
SNL 3044	520	640	320	220	200	260	168
	117 000	*144 000*	*72 000*	*49 500*	*45 000*	*58 500*	*37 800*
SNL 3048	620	800	380	280	260	320	200
	139 500	*180 000*	*85 500*	*63 000*	*58 500*	*72 000*	*45 000*
SNL 3052	680	840	400	300	280	340	220
	153 000	*189 000*	*90 000*	*67 500*	*63 000*	*76 500*	*49 500*
SNL 3056	760	940	460	340	300	380	240
	171 000	*211 500*	*103 500*	*76 500*	*67 500*	*85 500*	*54 000*
SNL 3060	800	1 000	480	360	320	400	260
	180 000	*225 000*	*108 000*	*81 000*	*72 000*	*90 000*	*58 500*
SNL 3064	960	1 200	580	440	380	480	300
	216 000	*270 000*	*130 500*	*99 000*	*85 500*	*108 000*	*67 500*
SNL 3068	1 080	1 400	680	500	440	560	360
	243 000	*315 000*	*153 000*	*112 500*	*99 000*	*126 000*	*81 000*
SNL 3072	1 080	1 080	680	500	440	560	360
	243 000	*243 000*	*153 000*	*112 500*	*99 000*	*126 000*	*81 000*
SNL 3076	1 200	1 500	720	520	460	600	380
	270 000	*337 500*	*162 000*	*117 000*	*103 500*	*135 000*	*85 500*
SNL 3080	1 200	1 540	720	540	480	600	400
	270 000	*346 500*	*162 000*	*121 500*	*108 000*	*135 000*	*90 000*
SNL 3084	1 220	1 600	780	580	500	640	420
	274 500	*360 000*	*175 500*	*130 500*	*112 500*	*144 000*	*94 500*
SNL 3088	1 400	1 740	840	620	540	700	440
	315 000	*391 500*	*189 000*	*139 500*	*121 500*	*157 500*	*99 000*
SNL 3092	1 520	1 920	920	680	600	760	480
	342 000	*432 000*	*207 000*	*153 000*	*135 000*	*171 000*	*108 000*
SNL 3096	1 520	1 920	920	680	600	760	480
	342 000	*432 000*	*207 000*	*153 000*	*135 000*	*171 000*	*108 000*
SNL 30/500	1 600	2 000	960	720	620	800	500
	360 000	*450 000*	*216 000*	*162 000*	*139 500*	*180 000*	*112 500*
SNL 30/530	1 760	2 240	1 080	800	700	880	560
	396 000	*504 000*	*243 000*	*180 000*	*157 500*	*198 000*	*126 000*

continues on next page

[1] The values are based on a safety factor of 5.

cont. Table 6

Safe loads for large SNL plummer block housings made of grey cast iron

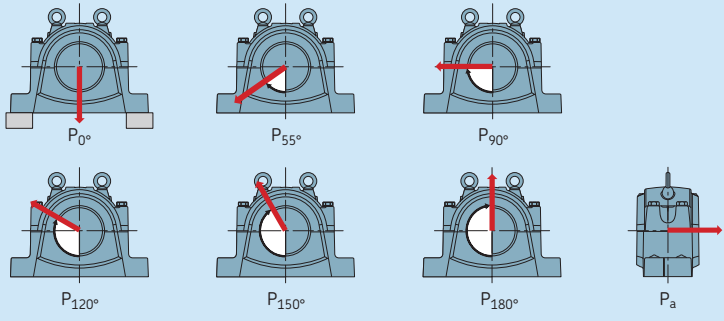

Housing Size	Safe loads[1] $P_{0°}$	$P_{55°}$	$P_{90°}$	$P_{120°}$	$P_{150°}$	$P_{180°}$	P_a
–	kN / *lbf.*						
SNL 3134	340	420	200	152	136	170	110
	76 500	*94 500*	*45 000*	*34 200*	*30 600*	*38 250*	*24 750*
SNL 3136	380	480	230	170	152	190	124
	85 500	*108 000*	*51 750*	*38 250*	*34 200*	*42 750*	*27 900*
SNL 3138	440	540	260	200	176	220	142
	99 000	*121 500*	*58 500*	*45 000*	*39 600*	*49 500*	*31 950*
SNL 3140	520	640	320	220	200	260	168
	117 000	*144 000*	*72 000*	*49 500*	*45 000*	*58 500*	*37 800*
SNL 3144	620	800	380	280	260	320	200
	139 500	*180 000*	*85 500*	*63 000*	*58 500*	*72 000*	*45 000*
SNL 3148	680	840	400	300	280	340	220
	153 000	*189 000*	*90 000*	*67 500*	*63 000*	*76 500*	*49 500*
SNL 3152	760	940	460	340	300	380	240
	171 000	*211 500*	*103 500*	*76 500*	*67 500*	*85 500*	*54 000*
SNL 3156	800	1 000	480	360	320	400	260
	180 000	*225 000*	*108 000*	*81 000*	*72 000*	*90 000*	*58 500*
SNL 3160	960	1 200	580	440	380	480	300
	216 000	*270 000*	*130 500*	*99 000*	*85 500*	*108 000*	*67 500*
SNL 3164	1 080	1 400	680	500	440	560	360
	243 000	*315 000*	*153 000*	*112 500*	*99 000*	*126 000*	*81 000*
SNL 3168	1 200	1 500	720	520	460	600	380
	270 000	*337 500*	*162 000*	*117 000*	*103 500*	*135 000*	*85 500*
SNL 3172	1 200	1 540	720	540	480	600	400
	270 000	*346 500*	*162 000*	*121 500*	*108 000*	*135 000*	*90 000*
SNL 3176	1 220	1 600	780	580	500	640	420
	274 500	*360 000*	*175 500*	*130 500*	*112 500*	*144 000*	*94 500*
SNL 3180	1 400	1 740	840	620	540	700	440
	315 000	*391 500*	*189 000*	*139 500*	*121 500*	*157 500*	*99 000*
SNL 3184	1 520	1 920	920	680	600	760	480
	342 000	*432 000*	*207 000*	*153 000*	*135 000*	*171 000*	*108 000*
SNL 3188	1 600	2 000	960	720	620	800	500
	360 000	*450 000*	*216 000*	*162 000*	*139 500*	*180 000*	*112 500*
SNL 3192	1 680	2 140	1 040	760	660	840	540
	378 000	*481 500*	*234 000*	*171 000*	*148 500*	*189 000*	*121 500*
SNL 3196	1 760	2 240	1 080	800	700	880	560
	396 000	*504 000*	*243 000*	*180 000*	*157 500*	*198 000*	*126 000*

continues on next page

[1] The values are based on a safety factor of 5.

cont. Table 6

Safe loads for large SNL plummer block housings made of grey cast iron

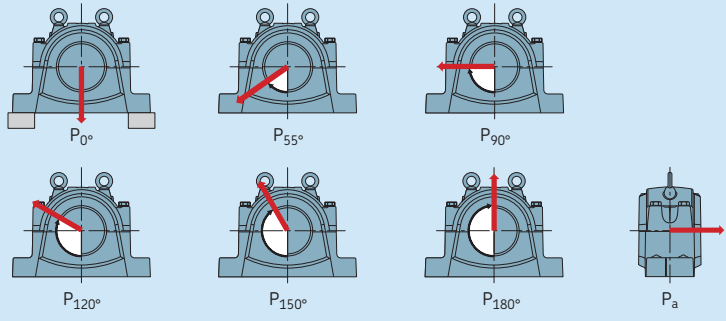

Housing Size	Safe loads[1] $P_{0°}$	$P_{55°}$	$P_{90°}$	$P_{120°}$	$P_{150°}$	$P_{180°}$	P_a
–	kN / *lbf.*						
SNL 3234	440	540	260	200	176	220	142
	99 000	*121 500*	*58 500*	*45 000*	*39 600*	*49 500*	*31 950*
SNL 3236	440	540	260	200	176	220	142
	99 000	*121 500*	*58 500*	*45 000*	*39 600*	*49 500*	*31 950*
SNL 3238	520	640	320	220	200	260	168
	117 000	*144 000*	*72 000*	*49 500*	*45 000*	*58 500*	*37 800*
SNL 3240	620	800	380	280	260	320	200
	139 500	*180 000*	*85 500*	*63 000*	*58 500*	*72 000*	*45 000*
SNL 3244	680	840	400	300	280	340	130
	153 000	*189 000*	*90 000*	*67 500*	*63 000*	*76 500*	*29 250*
SNL 3248	760	940	460	340	300	380	134
	171 000	*211 500*	*103 500*	*76 500*	*67 500*	*85 500*	*30 150*
SNL 3252	960	1 200	580	440	380	480	230
	216 000	*270 000*	*130 500*	*99 000*	*85 500*	*108 000*	*51 750*
SNL 3256	960	1 200	580	440	380	480	240
	216 000	*270 000*	*130 500*	*99 000*	*85 500*	*108 000*	*54 000*
SNL 3260	1 080	1 400	680	500	440	560	320
	243 000	*315 000*	*153 000*	*112 500*	*99 000*	*126 000*	*72 000*
SNL 3264	1 200	1 500	720	520	460	600	290
	270 000	*337 500*	*162 000*	*117 000*	*103 500*	*135 000*	*65 250*
SNL 3268	1 220	1 600	780	580	500	640	370
	274 500	*360 000*	*175 500*	*130 500*	*112 500*	*144 000*	*83 250*
SNL 3272	1 400	1 740	840	620	540	700	320
	315 000	*391 500*	*189 000*	*139 500*	*121 500*	*157 500*	*72 000*
SNL 3276	1 520	1 920	920	680	600	760	420
	342 000	*432 000*	*207 000*	*153 000*	*135 000*	*171 000*	*94 500*
SNL 3280	1 520	1 920	920	680	600	760	480
	342 000	*432 000*	*207 000*	*153 000*	*135 000*	*171 000*	*108 000*
SNL 3284	1 680	2 140	1 040	760	660	840	520
	378 000	*481 500*	*234 000*	*171 000*	*148 500*	*189 000*	*117 000*
SNL 3288	1 760	2 240	1 080	800	700	880	540
	396 000	*504 000*	*243 000*	*180 000*	*157 500*	*198 000*	*121 500*

[1] The values are based on a safety factor of 5.

Load carrying capacity of the cap bolts

Approximate values for the yield points for cap bolts are provided in **table 7**. The values in **table 7** apply to 8.8 strength cap bolts, which are supplied with SNL and SNLD housings.

If a safety factor of 6 is used for the permissible load of grey cast iron SNL housings, the cap bolts do not need to be considered. In this case, the permissible load of the housing is less than the permissible load for the cap bolts.

Table 7

Load carrying capacity and torque values for cap bolts and attachment bolts

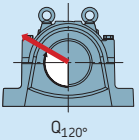

$Q_{120°}$

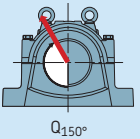

$Q_{150°}$

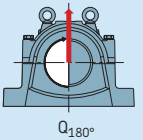

$Q_{180°}$

Housing	Cap bolts					Attachment bolts	
Size	Yield point for four bolts $Q_{120°}$	$Q_{150°}$	$Q_{180°}$	Size	Tightening torque	Size	Tightening torque[1]
–	kN			–	Nm	–	Nm
SNL 3036	1 800	1 040	900	M 24×140	350	M 24	665
SNL 3038	1 800	1 040	900	M 24×140	350	M 24	665
SNL 3040	1 800	1 040	900	M 24×150	350	M 24	665
SNL 3044	1 800	1 040	900	M 24×160	350	M 30	1 310
SNL 3048	1 800	1 040	900	M 24×160	350	M 30	1 310
SNL 3052	2 860	1 650	1 430	M 30×180	400	M 30	1 310
SNL 3056	2 860	1 650	1 430	M 30×200	400	M 36	2 280
SNL 3060	2 860	1 650	1 430	M 30×200	400	M 36	2 280
SNL 3064	2 860	1 650	1 430	M 30×220	400	M 36	2 280
SNL 3068	2 860	1 650	1 430	M 30×220	400	M 36	2 280
SNL 3072	2 860	1 650	1 430	M 30×220	400	M 36	2 280
SNL 3076	4 200	2 400	2 100	M 36×240	600	M 36	2 280
SNL 3080	4 200	2 400	2 100	M 36×240	600	M 36	2 280
SNL 3084	4 200	2 400	2 100	M 36×240	600	M 36	2 280
SNL 3088	4 200	2 400	2 100	M 36×240	600	M 42	3 640
SNL 3092	5 800	3 350	2 900	M 42×280	850	M 42	3 640
SNL 3096	5 800	3 350	2 900	M 42×280	850	M 42	3 640
SNL 30/500	5 800	3 350	2 900	M 42×280	850	M 42	3 640
SNL 30/530	5 800	3 350	2 900	M 42×320	850	M 48	5 450
SNL 3134	1 800	1 040	900	M 24×140	350	M 24	665
SNL 3136	1 800	1 040	900	M 24×140	350	M 24	665
SNL 3138	1 800	1 040	900	M 24×150	350	M 24	665
SNL 3140	1 800	1 040	900	M 24×160	350	M 30	1 310
SNL 3144	1 800	1 040	900	M 24×160	350	M 30	1 310
SNL 3148	2 860	1 650	1 430	M 30×180	400	M 30	1 310

continues on next page

[1] Recommended by bolt manufacturers

cont. Table 7

Load carrying capacity and torque values for cap bolts and attachment bolts

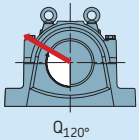

$Q_{120°}$

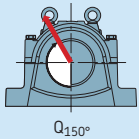

$Q_{150°}$

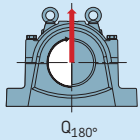

$Q_{180°}$

Housing Size	**Cap bolts** Yield point for four bolts $Q_{120°}$	$Q_{150°}$	$Q_{180°}$	Size	Tightening torque	**Attachment bolts** Size	Tightening torque[1]
–	kN			–	Nm	–	Nm
SNL 3152	2 860	1 650	1 430	M 30x200	400	M 36	2 280
SNL 3156	2 860	1 650	1 430	M 30x200	400	M 36	2 280
SNL 3160	2 860	1 650	1 430	M 30x220	400	M 36	2 280
SNL 3164	2 860	1 650	1 430	M 30x220	400	M 36	2 280
SNL 3168	4 200	2 400	2 100	M 36x240	600	M 36	2 280
SNL 3172	4 200	2 400	2 100	M 36x240	600	M 36	2 280
SNL 3176	4 200	2 400	2 100	M 36x240	600	M 36	2 280
SNL 3180	4 200	2 400	2 100	M 36x240	600	M 42	3 640
SNL 3184	5 800	3 350	2 900	M 42x280	850	M 42	3 640
SNL 3188	5 800	3 350	2 900	M 42x280	850	M 42	3 640
SNL 3192	5 800	3 350	2 900	M 42x300	850	M 42	3 640
SNL 3196	5 800	3 350	2 900	M 42x320	850	M 48	5 450
SNL 3234	1 800	1 040	900	M 24x150	350	M 24	665
SNL 3236	1 800	1 040	900	M 24x150	350	M 24	665
SNL 3238	1 800	1 040	900	M 24x160	350	M 30	1 310
SNL 3240	1 800	1 040	900	M 24x160	350	M 30	1 310
SNL 3244	2 860	1 650	1 430	M 30x180	400	M 30	1 310
SNL 3248	2 860	1 650	1 430	M 30x200	400	M 36	2 280
SNL 3252	2 860	1 650	1 430	M 30x220	400	M 36	2 280
SNL 3256	2 860	1 650	1 430	M 30x220	400	M 36	2 280
SNL 3260	2 860	1 650	1 430	M 30x220	400	M 36	2 280
SNL 3264	4 200	2 400	2 100	M 36x240	600	M 36	2 280
SNL 3268	4 200	2 400	2 100	M 36x240	600	M 36	2 280
SNL 3272	4 200	2 400	2 100	M 36x240	600	M 42	3 640
SNL 3276	5 800	3 350	2 900	M 42x280	850	M 42	3 640
SNL 3280	5 800	3 350	2 900	M 42x280	850	M 42	3 640
SNL 3284	5 800	3 350	2 900	M 42x300	850	M 42	3 640
SNL 3288	5 800	3 350	2 900	M 42x320	850	M 48	5 450

[1] Recommended by bolt manufactures

Operating temperature

The permissible operating temperature is mainly limited by the seals (→ **table 1**, **page 197**), and the lubricant in the bearing. For temperature limits of SKF bearings and lubricants, refer to the product information available online at skf.com/bearings.

The housing material does not have any additional temperature limits, except for very low temperature applications where impact strength could be a factor.

The housing paint is heat resistant up to 80 °C *(175 °F)* material temperature or 100 °C *(210 °F)* ambient temperature.

When temperatures outside the permissible range are expected, contact the SKF application engineering service.

Operating speed

The permissible operating speed is not limited by the housing, except when taconite seals are used. The maximum speeds for taconite seals are provided in **table 1** on **page 197**. For speed limits of the bearing, refer to the product information available online at skf.com/bearings.

Attachment bolt recommendations

In typical applications, 8.8 class hexagon head bolts, in accordance with ISO 4014, can be used together with washers. If the load does not act perpendicularly toward the base, it may be necessary to use stronger 10.9 class bolts.

SKF housings can withstand loads resulting from tightening the attachment bolts to the torque values recommended by bolt manufacturers (→ **table 7**). They are valid for oiled, but otherwise untreated, thread surfaces. SKF cannot guarantee that tightening to the recommended value will provide sufficient anchoring. Make sure that attachment bolts, dowels or stops, and a sufficiently strong support can accommodate all occurring loads.

Lubrication

SNL housings in the 30, 31 and 32 series with labyrinth or taconite seals are intended for grease lubrication. For oil lubrication, modified housings with oil seals (→ **page 198**) or SONL plummer block housings (→ **page 349**) should be used.

The lubricant should be selected based on the operating conditions of the bearing. For additional information about lubricant selection, refer to the product information available online at skf.com /bearings.

Initial grease fill

If no other requirements exist, the free space in the bearing should be completely filled with grease and the free space in the housing should be filled to 20 to 40% of its volume. A 40% grease fill is required when bearings have to be relubricated from the side, while a 20% grease fill is used when bearings are relubricated via the outer ring.

The housing base has markings to show the height of a 40% grease fill (→ **fig. 11**). For highly contaminated environments and slow speeds, fill the housing to 70–80%. For best protection against contaminants, use the SKF three-barrier solution (→ **page 39**). For additional information, contact the SKF application engineering service.

Quantites for 20 and 40% grease fills are listed in **table 8** on **page 213**. The values are valid for a typical lithium grease (about

Fig. 11

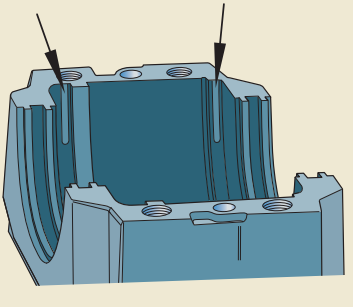

0,95 g/cm^3). They include the grease for the bearing, but not the grease to fill the seals. For sealed bearings, the values have to be adjusted.

In most applications, the initial grease fill will adequately lubricate the bearing until the grease is exchanged during the next planned maintenance interval.

Relubrication

SNL plummer block housings enable relubrication of the incorporated bearings and seals. There are three drilled and tapped holes for an AH 1/8-27 PTF grease fitting: two in the cap (one centred and one offset), and one in the base. Each hole is sealed at delivery with a threaded plug.

Dimples cast into the top of the housing cap indicate alternative positions where holes can be drilled and tapped to accommodate a grease fitting. The two dimples on the outer sides of the central ridge indicate the position for lubrication holes for the seals.

The following items are supplied with each housing:

- a grease fitting, designation AH 1/8-27 PTF, with a plastic cover (fitting protector)
- a grease fitting, designation M1 G 1/8
- an adapter, designation LAPN 1/8

The adapter transforms the 1/8-27 NPSF thread to a G 1/4, which enables the use of grease lubricators such as SKF MultiPoint.

Table 8

Initial grease fill

Housing Size	Initial fill 20%	40%	Housing Size	Initial fill 20%	40%
–	kg		–	kg	
SNL 3036	0,70	1,20	**SNL 3134**	0,70	1,10
SNL 3038	0,90	1,50	**SNL 3136**	0,90	1,40
SNL 3040	1,20	2,00	**SNL 3138**	1,20	1,80
SNL 3044	1,60	2,70	**SNL 3140**	1,50	2,30
SNL 3048	1,80	3,00	**SNL 3144**	1,70	2,70
SNL 3052	2,30	3,90	**SNL 3148**	2,20	3,40
SNL 3056	2,80	4,90	**SNL 3152**	2,80	4,30
SNL 3060	3,10	5,20	**SNL 3156**	2,90	4,40
SNL 3064	4,10	7,00	**SNL 3160**	4,00	6,20
SNL 3068	5,10	8,70	**SNL 3164**	5,00	7,70
SNL 3072	6,20	11,0	**SNL 3168**	6,20	9,40
SNL 3076	6,30	11,0	**SNL 3172**	6,40	9,70
SNL 3080	6,70	11,5	**SNL 3176**	6,40	9,60
SNL 3084	7,00	12,0			
SNL 3088	8,50	14,5	**SNL 3180**	8,00	12,0
SNL 3092	11,0	19,0	**SNL 3184**	10,0	15,0
SNL 3096	11,0	18,5	**SNL 3188**	10,5	16,0
SNL 30/500	11,5	20,0	**SNL 3192**	12,0	17,5
SNL 30/530	13,0	21,5	**SNL 3196**	12,0	17,0
SNL 3234	1,20	1,90	**SNL 3260**	4,80	6,90
SNL 3236	1,20	1,90	**SNL 3264**	6,00	8,60
SNL 3238	1,40	2,20	**SNL 3268**	6,30	8,40
SNL 3240	1,70	2,50	**SNL 3272**	7,80	10,5
SNL 3244	2,10	3,00	**SNL 3276**	8,90	12,5
SNL 3248	2,70	3,80	**SNL 3280**	10,5	14,5
SNL 3252	3,80	5,60	**SNL 3284**	11,5	15,0
SNL 3256	3,90	5,60	**SNL 3288**	12,0	15,0

Relubrication via the outer ring

The hole in the centre of the cap or the hole in the base should be used to relubricate spherical roller bearings with a relubrication feature (a lubrication groove and holes in the outer ring) (→ **fig. 12**). When applying grease via the relubrication feature, the shaft should be rotating. Narrow bearings (dimension series 13 and 22) in the locating position can be axially displaced, so that the relubrication groove in the bearing does not line up with the relubrication hole in the housing cap. Make sure the bearing is sufficiently centred when relubricating.

Relubrication from the side

When relubricating from the side, which is typically necessary for CARB toroidal roller bearings, the offset hole in the housing should be used (→ **fig. 12**).

When bearings mounted on an adapter sleeve have to be relubricated from the side, the grease should be introduced from the side opposite the lock nut.

When bearings mounted at the end of a shaft have to be relubricated from the side, the grease should be applied at the point closest to the end cover.

Grease escape holes

If frequent relubrication is required, SKF recommends having grease escape holes (→ **fig. 13**). Dimensions can be found in **table 9**. SNL housings supplied with grease escape holes are identified by the suffix V, e.g. SNL 3134 V.

Fig. 13

Grease escape hole

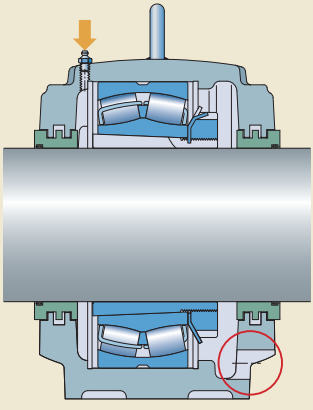

Fig. 12

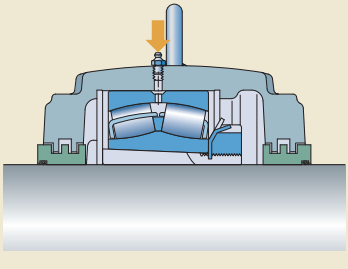

Lubricating the bearing via the outer ring

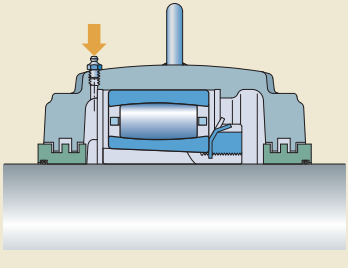

Lubricating the bearing from the side

Table 9

Recommended dimensions for grease escape holes

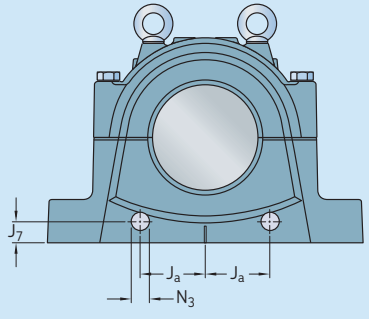

Housing			Dimensions		
Size			J_a	J_7	N_3
–			mm		
SNL 3036	**SNL 3134**		105	34	30
SNL 3038	**SNL 3136**		110	38	30
SNL 3040	**SNL 3138**	**SNL 3234**	120	36	30
SNL 3044	**SNL 3140**	**SNL 3236**	120	36	30
		SNL 3238	120	36	30
SNL 3048	**SNL 3144**	**SNL 3240**	130	42	40
SNL 3052	**SNL 3148**	**SNL 3244**	145	43	40
SNL 3056	**SNL 3152**	**SNL 3248**	150	44	40
SNL 3060	**SNL 3156**		165	51	40
SNL 3064	**SNL 3160**	**SNL 3252**	180	53	40
SNL 3068	**SNL 3164**	**SNL 3256**	180	53	40
SNL 3072		**SNL 3260**	180	53	40
SNL 3076	**SNL 3168**	**SNL 3264**	185	51	40
SNL 3080	**SNL 3172**		220	51	40
SNL 3084	**SNL 3176**	**SNL 3268**	220	53	40
SNL 3088	**SNL 3180**	**SNL 3272**	230	58	40
SNL 3092	**SNL 3184**	**SNL 3276**	260	58	40
SNL 3096	**SNL 3188**	**SNL 3280**	260	58	40
SNL 30/500			260	58	40
SNL 30/530	**SNL 3192**	**SNL 3284**	280	58	40
	SNL 3196	**SNL 3288**	280	58	40

Oil lubrication

SNL housings in the 30, 31 and 32 series can be used in applications where there are relatively high speeds and the bearings are lubricated via an oil bath or circulating oil lubrication system.

The housings must be modified to accommodate one of the following oil seals:

- TURT or TURA for oil bath or circulating oil lubrication system (→ **page 198**)
- TURP for circulating oil lubrication system and large axial movements (→ **page 200**)

Recommended oil levels can be found in **table 10a**, **10b** and **10c** on **page 216–218**.

Housings modified for oil lubrication are not stock items. Check availability prior to ordering.

Table 10a

Recommended oil levels[1)]

Housing Size	Shaft diameter	Design and bearing series									
		TURT						TURA			
		230		222		223		C 30		C 22	
		min.	max.	min.	max.	min.	max.	min.	max.	min.	max.
–	mm	mm									
SNL 3036	160	48	54					47	55		
SNL 3038	140			57	67						
	170	51	58					49	57		
SNL 3040	150			58	69					55	69
	180	53	62					50	60		
SNL 3044	200	59	69					57	68		
SNL 3048	150					72	86				
	180			65	79						
	220	59	68					58	69		
SNL 3052	240	62	73					59	72		
SNL 3056	180					86	103				
	260	72	83					68	81		
SNL 3060	280	75	87					74	88		
SNL 3064	240			91	112						
	300	85	97					82	96		
SNL 3068	320	88	102					81	99		
SNL 3072	340	80	94					74	92		
SNL 3076	360	87	102					87	105		
SNL 3080	380	80	97					76	97		
SNL 3084	400	80	97					77	99		
SNL 3088	410	87	104					89	111		
SNL 3092	430	103	122					100	119		
SNL 3096	450	95	113					92	111		
SNL 30/500	470	93	112					94	113		
SNL 30/530	500	107	128					110	134		

[1)] The oil level is measured from the base of the housing. Mark the min and max level on the oil level gauge.

Table 10b

Recommended oil levels[1)]

Housing Size	Shaft diameter	Design and bearing series									
		TURT						TURA			
		231		222		223		C 31		C 22	
		min.	max.	min.	max.	min.	max.	min.	max.	min.	max.
–	mm	mm									
SNL 3134	115					55	66				
	150	50	56					48	58		
SNL 3136	125					58	69				
	160	52	59					49	61		
SNL 3138	135					59	71				
	160			53	64						
	170	54	61					48	61		
SNL 3140	140					71	84				
	170			65	77					64	80
	180	65	74					60	73		
SNL 3144	200	62	71					56	70		
SNL 3148	170					75	91				
	200			69	84						
	220	68	78					64	81	67	90
SNL 3152	220			70	87						
	240	72	83					65	83		
SNL 3156	200					87	106				
	260	81	93					74	92		
SNL 3160	220					90	112				
	260			81	102						
	280	85	98					78	98		
SNL 3164	240					93	116				
	280			83	107						
	300	89	103					84	108		
SNL 3168	260					96	121				
	300			85	112						
	320	93	108					84	110		
SNL 3172	340	90	106					84	110		
SNL 3176	360	91	108					87	111		
SNL 3180	340			98	124						
	380	99	116					88	111		
SNL 3184	400	108	128					103	129		
SNL 3188	410	106	125					106	133		
SNL 3192	430	109	130					103	131		
SNL 3196	450	116	137					112	139		

[1)] The oil level is measured from the base of the housing. Mark the min and max level on the oil level gauge.

Split plummer block housings SNL 30, 31 and 32 series

Table 10c

Recommended oil levels[1)]

Housing Size	**Shaft diameter**	**Design and bearing series** TURT 232		C 32	
		min.	max.	min.	max.
–	mm	mm			
SNL 3232	140			54	68
SNL 3234	150	61	69		
SNL 3236	160	56	64	47	61
SNL 3238	170	68	77		
SNL 3240	180	70	79		
SNL 3244	200	73	83		
SNL 3248	220	75	87		
SNL 3252	240	98	111		
SNL 3256	260	87	101		
SNL 3260	280	91	106		
SNL 3264	300	95	111		
SNL 3268	320	98	115		
SNL 3272	340	106	124		
SNL 3276	360	121	141		
SNL 3280	380	114	135		
SNL 3284	400	117	139		
SNL 3288	410	124	147		

[1)] The oil level is measured from the base of the housing. Mark the min and max level on the oil level gauge.

Mounting

SNL plummer (pillow) block housings must be mounted properly using the appropriate tools and state of the art mechanical mounting methods. All the associated components must also meet certain basic requirements (→ *Specifications for shafts and housing support surfaces* on **page 45**).

Mounting instructions for each housing are provided with the seal pack. For information about mounting rolling bearings, refer to the *SKF bearing maintenance handbook* or skf.com/mount.

Torque specifications

Cap bolts should be tightened to the torque values listed in **table 7** on **page 210**. For information about attachment bolts, refer to *Attachment bolt recommendations* on **page 212**.

Pinning or supporting the housing

Some load conditions may require the housing to be pinned to its support surface or a stop to accommodate loads acting parallel to the housing support surface (→ *Additional housing support*, **page 204**).

Recommendations for the position and size of the holes to accommodate dowel pins are provided in **table 11**.

Table 11

Position and size of dowel pin holes

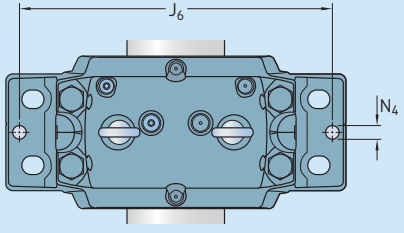

Housing Size			Dimensions J_6	N_4 max
–			mm	
SNL 3036	**SNL 3134**		470	20
SNL 3038	**SNL 3136**		490	20
SNL 3040	**SNL 3138**	**SNL 3234**	520	20
		SNL 3236	520	20
SNL 3044	**SNL 3140**	**SNL 3238**	560	20
SNL 3048	**SNL 3144**	**SNL 3240**	590	20
SNL 3052	**SNL 3148**	**SNL 3244**	650	20
SNL 3056	**SNL 3152**	**SNL 3248**	720	20
SNL 3060	**SNL 3156**		740	20
SNL 3064	**SNL 3160**	**SNL 3252**	770	25
		SNL 3256	770	25
SNL 3068	**SNL 3164**	**SNL 3260**	820	25
SNL 3072			820	25
SNL 3076	**SNL 3168**	**SNL 3264**	880	25
SNL 3080	**SNL 3172**		920	30
SNL 3084	**SNL 3176**	**SNL 3268**	960	30
SNL 3088	**SNL 3180**	**SNL 3272**	1 020	35
SNL 3092	**SNL 3184**	**SNL 3276**	1 070	35
SNL 3096			1 070	35
SNL 30/500	**SNL 3188**	**SNL 3280**	1 120	35
	SNL 3192	**SNL 3284**	1 160	40
SNL 30/530	**SNL 3196**	**SNL 3288**	1 210	40

Condition monitoring

SNL housings in the 30, 31 and 32 series have appropriate positions for condition monitoring sensors (→ **fig. 14**).

Postition 1 is a measurement point perpendicular to the shaft and should be used when loads act away from the support surface.

Position 2 is a measurement point perpendicular to the shaft and should be used when loads act toward the support surface.

Position 3 is a measurement point parallel to the shaft and should be used when loads act toward the support surface.

All three positions are in accordance with ISO 10816-1.

For additional information about condition monitoring, as well as the measurement tools and systems available from SKF, contact your local SKF representative or SKF Authorized Distributor.

Fig. 14

Measurement points for condition monitoring



Accessories

The following accessories are available for SNL housings in the 30, 31 and 32 series:

- Oil leveller: LAHD
- Automatic lubricators: SKF SYSTEM 24 or SKF MultiPoint. If frequent relubrication is required and SKF SYSTEM 24 is to be used, combine it with LAPM 4 (Manifold 4 to 1).
- Grease meter: LAGM 1000E
- Condition monitoring sensors

For additional information, refer to *SKF tools and products* (→ **page 47)**.

Ordering information

For SNL housings in the 30, 31 and 32 series, each of the following items must be ordered separately:

- housing
- seals
- end cover
- locating rings
- bearing
- adapter sleeve

Order example

Two plummer block housings with labyrinth seals are required for two 23036 CCK/W33 bearings on H 3036 adapter sleeves. One housing will accommodate the non-locating bearing at the end of the shaft. The other housings will accommodate the locating bearing and a through shaft.

The following items should be ordered (in addition to the bearings and adapter sleeves):

- 2 housings SNL 3036
- 3 labyrinth seals TS 36
- 1 end cover ETS 36
- 2 locating rings FRB 17/280

5.1 Large SNL plummer block housings for bearings on an adapter sleeve, metric shafts

d_a **115 – 150** mm

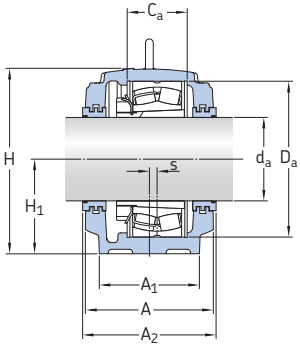

Labyrinth seals, TS design

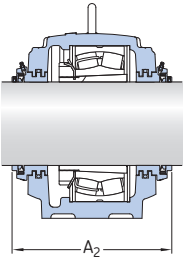

Taconite seals, TNF design

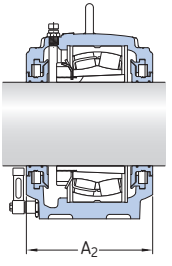

Oil seals, TURT/TURA design

Shaft diameter d_a	Housing	Appropriate parts Bearing[1]	Adapter sleeve[2]	Locating ring[3]	Seals	End cover	Width incl. seals A_2
mm	–	–					mm
115	**SNL 3134**	22326 CCK/W33 22326-2CS5K	H 2326 H 2326	2 FRB 7.5/280 2 FRB 7.5/280	TS 34/115 TNF 34/115	ETS 34	240 299
125	**SNL 3136**	22328 CCK/W33 22328-2CS5K	H 2328 H 2328	2 FRB 7/300 2 FRB 7/300	TS 36/125 TNF 36/125	ETS 36	250 310
135	**SNL 3138**	22330 CCK/W33 22330-2CS5K	H 2330 H 2330	2 FRB 8/320 2 FRB 8/320	TS 38/135 TNF 38/135	ETS 38	270 330
140	**SNL 3038**	22232 CCK/W33 22232-2CS5K 23232 CCK/W33 C 3232 K	H 3132 H 3132 H 2332 H 2332 L	2 FRB 17.5/290 2 FRB 17.5/290 2 FRB 5.5/290 2 FRB 5.5/290	TS 38/140 TNF 38/140	ETS 38	250 312
	SNL 3140	22332 CCK/W33 22332-2CS5K	H 2332 H 2332	2 FRB 9/340 2 FRB 9/340	TS 40/140 TNF 40/140	ETS 40	290 347
150	**SNL 3134**	23134 CCK/W33 23134-2CS5K C 3134 K	H 3134 H 3134 E H 3134 L	2 FRB 10/280 2 FRB 10/280 2 FRB 10/280	TS 34 TNF 34	ETS 34	240 299
	SNL 3134 TURT	23134 CCK/W33	H 3134	2 FRB 10/280	included	ETS 3134 R	225
	SNL 3134 TURA	C 3134 K	H 3134 E	2 FRB 10/280	included	ETS 3134 R	225
	SNL 3234	23234 CCK/W33	H 2334	2 FRB 6/310	TS 40/150 TNF 40/150	ETS 40	270 327
	SNL 3040	22234 CCK/W33 22234-2CS5K C 2234 K	H 3134 H 3134 H 3134 L	2 FRB 18/310 2 FRB 18/310 2 FRB 18/310	TS 40/150 TNF 40/150	ETS 40	270 327
	SNL 3048	22334 CCK/W33	H 2334	2 FRB 10/360	TS 48/150 TNF 48/150	ETS 48	300 380

[1] 222(00), 230(00), 231(00), 232(00)... – spherical roller bearing, C... – CARB toroidal roller bearing. Only typical bearings are listed. Other bearing variants can also fit the housing.
[2] The adapter sleeve fits the bearing in the same line only. Only typical adapter sleeves are listed. Other variants can also fit the housing.
[3] The locating rings fit the bearing in the same line only.

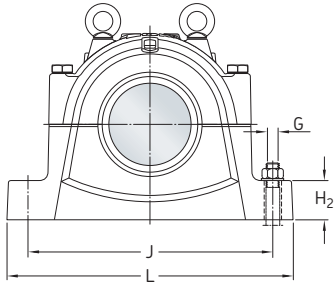

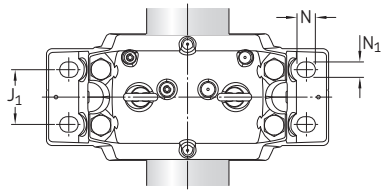

Shaft diameter	**Dimensions**														**Eye bolt** according to DIN 580	**Mass** Housing
d_a	A	A_1	C_a	D_a	H	H_1	H_2	J	J_1	L	N	N_1	s	G		
mm	mm														–	kg
115	230	180	108	280	333	170	70	430	100	510	34	28	14	24	M 16	69,5
125	240	190	116	300	353	180	75	450	110	530	34	28	15	24	M 16	77,5
135	260	210	124	320	375	190	80	480	120	560	34	28	10	24	M 20	97,5
140	240	190	115	290	353	180	75	450	110	530	34	28	15	24	M 16	77,5
	280	230	132	340	411	210	85	510	130	610	42	35	10	30	M 20	123
150	230	180	108	280	333	170	70	430	100	510	34	28	14	24	M 16	69,5
	230	180	108	280	333	170	70	430	100	510	34	28	14	24	M 16	69,5
	230	180	108	280	333	170	70	430	100	510	34	28	14	24	M 16	69,5
	260	210	122	310	375	190	80	480	120	560	34	28	10	24	M 20	97,5
	260	210	122	310	375	190	80	480	120	560	34	28	10	24	M 20	97,5
	290	240	140	360	434	220	90	540	140	640	42	35	12	30	M 20	139

5.1 Large SNL plummer block housings for bearings on an adapter sleeve, metric shafts

d_a **160** mm

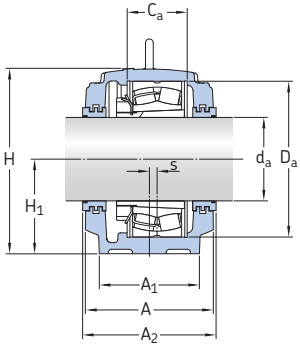

Labyrinth seals, TS design

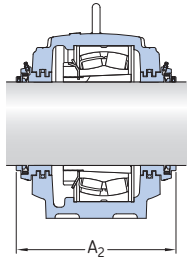

Taconite seals, TNF design

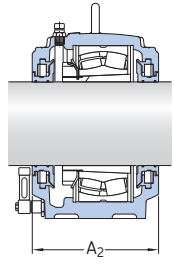

Oil seals, TURT/TURA design

Shaft diameter d_a	Housing	Appropriate parts Bearing[1]	Adapter sleeve[2]	Locating ring[3]	Seals	End cover	Width incl. seals A_2
mm	–	–					mm
160	**SNL 3036**	23036 CCK/W33 23036-2CS5K C 3036 K	H 3036 H 3036 E H 3036	2 FRB 17/280 2 FRB 17/280 2 FRB 17/280	TS 36 TNF 36	ETS 36	240 300
	SNL 3036 TURT	23036 CCK/W33	H 3036	2 FRB 17/280	included	ETS 3036 R	225
	SNL 3036 TURA	C 3036 K	H 3036	2 FRB 17/280	included	ETS 3036 R	225
	SNL 3136	23136 CCK/W33 23136-2CS5K C 3136 K	H 3136 H 3136 L H 3136 L	2 FRB 10/300 2 FRB 10/300 2 FRB 10/300	TS 36 TNF 36	ETS 36	250 310
	SNL 3136 TURT	23136 CCK/W33	H 3136	2 FRB 10/300	included	ETS 3136 R	235
	SNL 3136 TURA	C 3136 K	H 3136 L	2 FRB 10/300	included	ETS 3136 R	235
	SNL 3236	23236 CCK/W33 C 3236 K	H 2336 H 2336	2 FRB 6/320 2 FRB 6/320	TS 38/160 TNF 38/160	ETS 38	270 330
	SNL 3138	22236 CCK/W33 22236-2CS5K	H 3136 H 3136	2 FRB 19/320 2 FRB 19/320	TS 38/160 TNF 38/160	ETS 38	270 330

[1] 222(00), 230(00), 231(00), 232(00)...– spherical roller bearing, C... – CARB toroidal roller bearing. Only typical bearings are listed. Other bearing variants can also fit the housing.
[2] The adapter sleeve fits the bearing in the same line only. Only typical adapter sleeves are listed. Other variants can also fit the housing.
[3] The locating rings fit the bearing in the same line only.

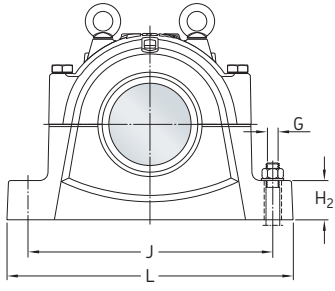

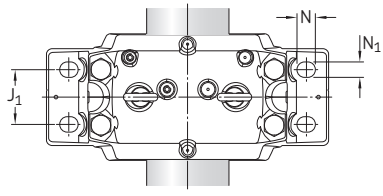

Shaft diameter	Dimensions														Eye bolt according to DIN 580	Mass Housing
d_a	A	A_1	C_a	D_a	H	H_1	H_2	J	J_1	L	N	N_1	s	G		
mm	mm														–	kg
160	230	180	108	280	333	170	70	430	100	510	34	28	14	24	M 16	69,5
	230	180	108	280	333	170	70	430	100	510	34	28	14	24	M 16	69,5
	230	180	108	280	333	170	70	430	100	510	34	28	14	24	M 16	69,5
	240	190	116	300	353	180	75	450	110	530	34	28	15	24	M 16	77,5
	240	190	116	300	353	180	75	450	110	530	34	28	15	24	M 16	77,5
	240	190	116	300	353	180	75	450	110	530	34	28	15	24	M 16	77,5
	260	210	124	320	375	190	80	480	120	560	34	28	10	24	M 20	97,5
	260	210	124	320	375	190	80	480	120	560	34	28	10	24	M 20	97,5

5.1 Large SNL plummer block housings for bearings on an adapter sleeve, metric shafts

d_a **170** mm

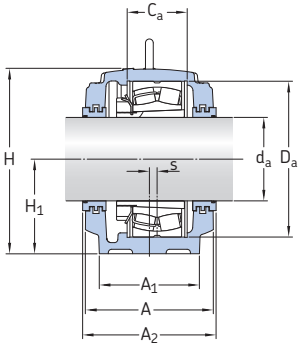

Labyrinth seals, TS design

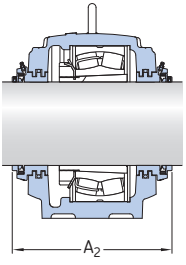

Taconite seals, TNF design

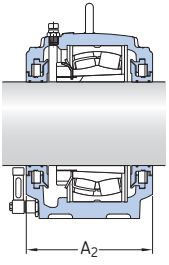

Oil seals, TURT/TURA design

Shaft diameter d_a	**Housing**	**Appropriate parts** Bearing[1]	Adapter sleeve[2]	Locating ring[3]	Seals	End cover	Width incl. seals A_2
mm	–	–					mm
170	**SNL 3038**	23038 CCK/W33 C 3038 K	H 3038 H 3038	4 FRB 10/290 4 FRB 10/290	TS 38 TNF 38	ETS 38	250 312
	SNL 3038 TURT	23038 CCK/W33	H 3038	4 FRB 10/290	included	ETS 3038 R	235
	SNL 3038 TURA	C 3038 K	H 3038	4 FRB 10/290	included	ETS 3038 R	235
	SNL 3138	23138 CCK/W33 23138-2CS5K C 3138 KV	H 3138 H 3138 H 3138	2 FRB 10/320 2 FRB 10/320 2 FRB 10/320	TS 38 TNF 38	ETS 38	270 330
	SNL 3138 TURT	23138 CCK/W33	H 3138	2 FRB 10/320	included	ETS 3138 R	255
	SNL 3138 TURA	C 3138 KV	H 3138	2 FRB 10/320	included	ETS 3138 R	255
	SNL 3238	23238 CCK/W33	H 2338	2 FRB 6/340	TS 40/170 TNF 40/170	ETS 40	290 347
	SNL 3140	22238 CCK/W33 22238-2CS5K C 2238 K	H 3138 H 3138 H 3138	4 FRB 10/340 4 FRB 10/340 4 FRB 10/340	TS 40/170 TNF 40/170	ETS 40	290 347
	SNL 3148	22338 CCK/W33	H 2338	2 FRB 8/400	TS 48/170 TNF 48/170	ETS 48	315 396

[1] 222(00), 230(00), 231(00), 232(00)...– spherical roller bearing, C... – CARB toroidal roller bearing. Only typical bearings are listed. Other bearing variants can also fit the housing.
[2] The adapter sleeve fits the bearing in the same line only. Only typical adapter sleeves are listed. Other variants can also fit the housing.
[3] The locating rings fit the bearing in the same line only.

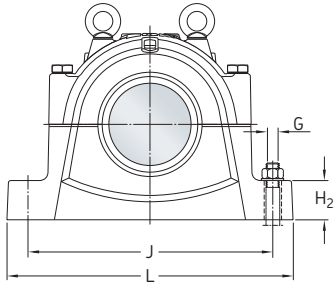

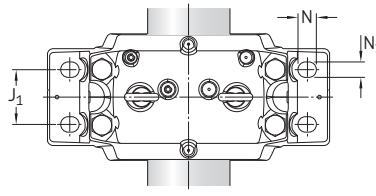

Shaft diameter	Dimensions														Eye bolt according to DIN 580	Mass Housing
d_a	A	A_1	C_a	D_a	H	H_1	H_2	J	J_1	L	N	N_1	s	G		
mm	mm														–	kg
170	240	190	115	290	353	180	75	450	110	530	34	28	15	24	M 16	77,5
	240	190	115	290	353	180	75	450	110	530	34	28	15	24	M 16	77,5
	240	190	115	290	353	180	75	450	110	530	34	28	15	24	M 16	77,5
	260	210	124	320	375	190	80	480	120	560	34	28	10	24	M 20	97,5
	260	210	124	320	375	190	80	480	120	560	34	28	10	24	M 20	97,5
	260	210	124	320	375	190	80	480	120	560	34	28	10	24	M 20	97,5
	280	230	132	340	411	210	85	510	130	610	42	35	10	30	M 20	123
	280	230	132	340	411	210	85	510	130	610	42	35	10	30	M 20	123
	310	260	148	400	474	240	95	600	150	700	42	35	12	30	M 24	187

5.1 Large SNL plummer block housings for bearings on an adapter sleeve, metric shafts

d_a **180** mm

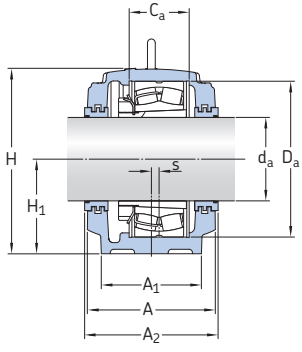

Labyrinth seals, TS design

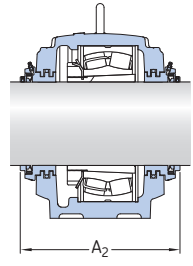

Taconite seals, TNF design

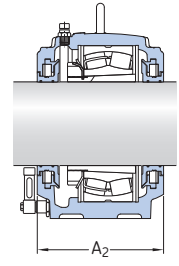

Oil seals, TURT/TURA design

Shaft diameter d_a	**Housing**	**Appropriate parts** Bearing[1]	Adapter sleeve[2]	Locating ring[3]	Seals	End cover	Width incl. seals A_2
mm	–	–					mm
180	**SNL 3040**	23040 CCK/W33 23040-2CS5K C 3040 K	H 3040 H 3040 H 3040	4 FRB 10/310 4 FRB 10/310 4 FRB 10/310	TS 40 TNF 40	ETS 40	270 327
	SNL 3040 TURT	23040 CCK/W33	H 3040	4 FRB 10/310	included	ETS 3040 R	255
	SNL 3040 TURA	C 3040 K	H 3040	4 FRB 10/310	included	ETS 3040 R	255
	SNL 3140	23140 CCK/W33 23140-2CS5K C 3140 K	H 3140 H 3140 H 3140	2 FRB 10/340 2 FRB 10/340 2 FRB 10/340	TS 40 TNF 40	ETS 40	290 347
	SNL 3140 TURT	23140 CCK/W33	H 3140	2 FRB 10/340	included	ETS 3140 R	275
	SNL 3140 TURA	C 3140 K	H 3140	2 FRB 10/340	included	ETS 3140 R	275
	SNL 3240	23240 CCK/W33	H 2340	2 FRB 6/360	TS 48/180 TNF 48/180	ETS 48	300 380
	SNL 3048	22240 CCK/W33 22240-2CS5K	H 3140 H 3140	2 FRB 21/360 2 FRB 21/360	TS 48/180 TNF 48/180	ETS 48	300 380
	SNL 3056	22340 CCK/W33	H 2340	2 FRB 14/420	TS 56/180 TNF 56/180	ETS 56	330 404

[1] 222(00), 230(00), 231(00), 232(00)... – spherical roller bearing, C... – CARB toroidal roller bearing. Only typical bearings are listed. Other bearing variants can also fit the housing.
[2] The adapter sleeve fits the bearing in the same line only. Only typical adapter sleeves are listed. Other variants can also fit the housing.
[3] The locating rings fit the bearing in the same line only.

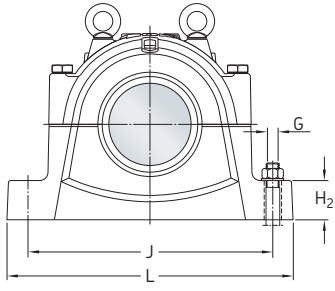

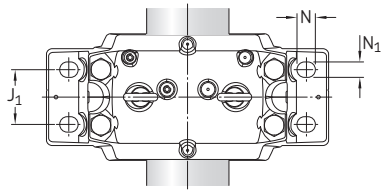

Shaft diameter	**Dimensions**														**Eye bolt** according to DIN 580	**Mass** Housing
d_a	A	A_1	C_a	D_a	H	H_1	H_2	J	J_1	L	N	N_1	s	G		
mm	mm														–	kg
180	260	210	122	310	375	190	80	480	120	560	34	28	10	24	M 20	97,5
	260	210	122	310	375	190	80	480	120	560	34	28	10	24	M 20	97,5
	260	210	122	310	375	190	80	480	120	560	34	28	10	24	M 20	97,5
	280	230	132	340	411	210	85	510	130	610	42	35	10	30	M 20	123
	280	230	132	340	411	210	85	510	130	610	42	35	10	30	M 20	123
	280	230	132	340	411	210	85	510	130	610	42	35	10	30	M 20	123
	290	240	140	360	434	220	90	540	140	640	42	35	12	30	M 20	139
	290	240	140	360	434	220	90	540	140	640	42	35	12	30	M 20	139
	320	280	166	420	516	260	100	650	160	770	50	42	13	36	M 24	221

5.1 Large SNL plummer block housings for bearings on an adapter sleeve, metric shafts

d_a **200** mm

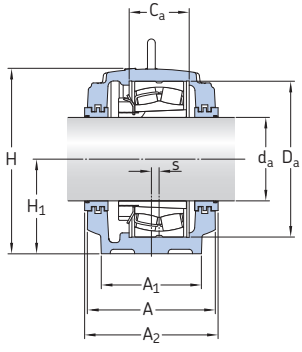

Labyrinth seals, TS design

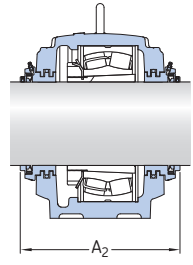

Taconite seals, TNF design

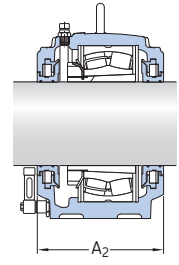

Oil seals, TURT/TURA design

Shaft diameter d_a	**Housing**	**Appropriate parts** Bearing[1]	Adapter sleeve[2]	Locating ring[3]	Seals	End cover	Width incl. seals A_2
mm	–	–					mm
200	**SNL 3044**	23044 CCK/W33 23044-2CS5K C 3044 K	OH 3044 H OH 3044 H OH 3044 H	4 FRB 10/340 4 FRB 10/340 4 FRB 10/340	TS 44 TNF 44	ETS 44	290 349
	SNL 3044 TURT	23044 CCK/W33	OH 3044 H	4 FRB 10/340	included	ETS 3044 R	275
	SNL 3044 TURA	C 3044 K	OH 3044 H	4 FRB 10/340	included	ETS 3044 R	275
	SNL 3144	23144 CCK/W33 23144-2CS5K C 3144 K	OH 3144 H OH 3144 HTL OH 3144 HTL	2 FRB 10/370 2 FRB 10/370 2 FRB 10/370	TS 44 TNF 44	ETS 44	300 357
	SNL 3144 TURT	23144 CCK/W33	OH 3144 H	2 FRB 10/370	included	ETS 3144 R	285
	SNL 3144 TURA	C 3144 K	OH 3144 HTL	2 FRB 10/370	included	ETS 3144 R	285
	SNL 3244	23244 CCK/W33	OH 2344 H	2 FRB 10/400	TS 48/200 TNF 48/200	ETS 48	315 396
	SNL 3148	22244 CCK/W33 22244-2CS5K C 2244 K	OH 3144 H OH 3144 H OH 3144 H	4 FRB 10/400 4 FRB 10/400 4 FRB 10/400	TS 48/200 TNF 48/200	ETS 48	315 396
	SNL 3156	22344 CCK/W33	OH 2344 H	2 FRB 10.5/460	TS 56/200 TNF 56/200	ETS 56	330 404

[1] 222(00), 230(00), 231(00), 232(00)... – spherical roller bearing, C... – CARB toroidal roller bearing. Only typical bearings are listed. Other bearing variants can also fit the housing.
[2] The adapter sleeve fits the bearing in the same line only. Only typical adapter sleeves are listed. Other variants can also fit the housing.
[3] The locating rings fit the bearing in the same line only.

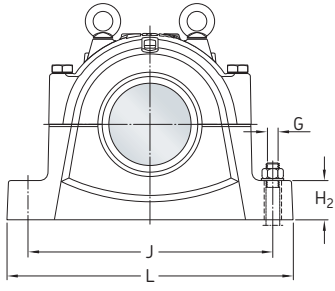

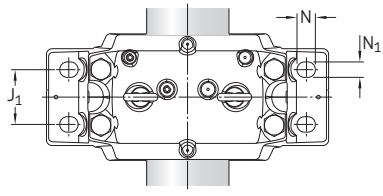

Shaft diameter	**Dimensions**														**Eye bolt** according to DIN 580	**Mass** Housing
d_a	A	A_1	C_a	D_a	H	H_1	H_2	J	J_1	L	N	N_1	s	G		
mm	mm														–	kg
200	280	230	130	340	411	210	85	510	130	610	42	35	10	30	M 20	123
	280	230	130	340	411	210	85	510	130	610	42	35	10	30	M 20	123
	280	230	130	340	411	210	85	510	130	610	42	35	10	30	M 20	123
	290	240	140	370	434	220	90	540	140	640	42	35	12	30	M 20	138
	290	240	140	370	434	220	90	540	140	640	42	35	12	30	M 20	138
	290	240	140	370	434	220	90	540	140	640	42	35	12	30	M 20	138
	310	260	164	400	474	240	95	600	150	700	42	35	12	30	M 24	187
	310	260	148	400	474	240	95	600	150	700	42	35	12	30	M 24	187
	320	280	166	460	550	280	105	670	160	790	50	42	16	36	M 24	252

5.1 Large SNL plummer block housings for bearings on an adapter sleeve, metric shafts

d_a **220** mm

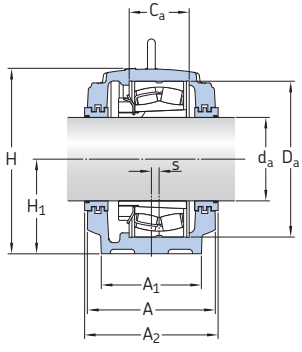

Labyrinth seals, TS design

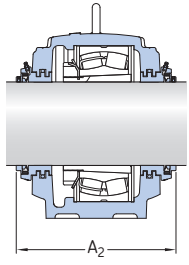

Taconite seals, TNF design

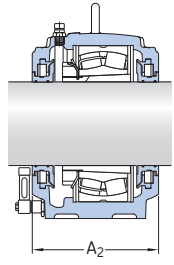

Oil seals, TURT/TURA design

Shaft diameter d_a	**Housing**	**Appropriate parts** Bearing[1]	Adapter sleeve[2]	Locating ring[3]	Seals	End cover	Width incl. seals A_2
mm	–	–					mm
220	**SNL 3048**	23048 CCK/W33 23048-2CS5K C 3048 K	OH 3048 H OH 3048 HE OH 3048 H	4 FRB 12/360 4 FRB 12/360 4 FRB 12/360	TS 48 TNF 48	ETS 48	300 380
	SNL 3048 TURT	23048 CCK/W33	OH 3048 H	4 FRB 12/360	included	ETS 3048 R	285
	SNL 3048 TURA	C 3048 K	OH 3048 H	4 FRB 12/360	included	ETS 3048 R	285
	SNL 3148	23148 CCK/W33 23148-2CS5K C 3148 K	OH 3148 H OH 3148 HTL OH 3148 HTL	2 FRB 10/400 2 FRB 10/400 2 FRB 10/400	TS 48 TNF 48	ETS 48	315 396
	SNL 3148 TURT	23148 CCK/W33	OH 3148 H	2 FRB 10/400	included	ETS 3148 R	305
	SNL 3148 TURA	C 3148 K	OH 3148 HTL	2 FRB 10/400	included	ETS 3148 R	305
	SNL 3248	23248 CCK/W33	OH 2348 H	2 FRB 10/440	TS 52/220 TNF 52/220	ETS 52	330 406
	SNL 3152	22248 CCK/W33	OH 3148 H	2 FRB 22/440	TS 52/220 TNF 52/220	ETS 52	330 412
	SNL 3160	22348 CCK/W33	OH 2348 H	2 FRB 12.5/500	TS 60/220 TNF 60/220	ETS 60	360 434

[1] 222(00), 230(00), 231(00), 232(00)...– spherical roller bearing, C... – CARB toroidal roller bearing. Only typical bearings are listed. Other bearing variants can also fit the housing.
[2] The adapter sleeve fits the bearing in the same line only. Only typical adapter sleeves are listed. Other variants can also fit the housing.
[3] The locating rings fit the bearing in the same line only.

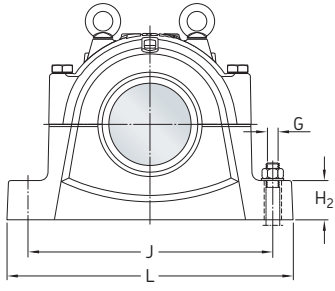

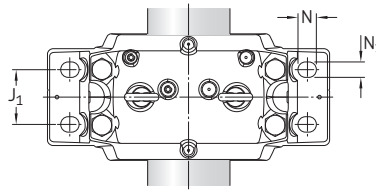

Shaft diameter	**Dimensions**														**Eye bolt** according to DIN 580	**Mass** Housing
d_a	A	A_1	C_a	D_a	H	H_1	H_2	J	J_1	L	N	N_1	s	G		
mm	mm														–	kg
220	290	240	140	360	434	220	90	540	140	640	42	35	12	30	M 20	139
	290	240	140	360	434	220	90	540	140	640	42	35	12	30	M 20	139
	290	240	140	360	434	220	90	540	140	640	42	35	12	30	M 20	139
	310	260	148	400	474	240	95	600	150	700	42	35	12	30	M 24	187
	310	260	148	400	474	240	95	600	150	700	42	35	12	30	M 24	187
	310	260	148	400	474	240	95	600	150	700	42	35	12	30	M 24	187
	320	280	180	440	516	260	100	650	160	770	50	42	13	36	M 24	221
	320	280	164	440	516	260	100	650	160	770	50	42	13	36	M 24	221
	350	310	180	500	591	300	110	710	190	830	50	42	22	36	M 30	301

5.1 Large SNL plummer block housings for bearings on an adapter sleeve, metric shafts

d_a **240** mm

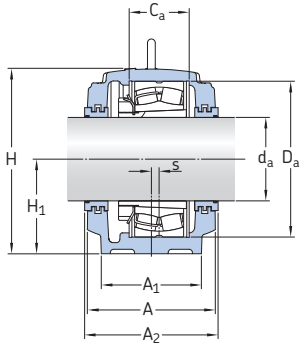

Labyrinth seals, TS design

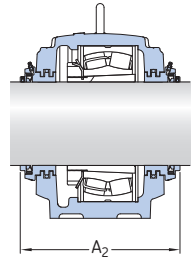

Taconite seals, TNF design

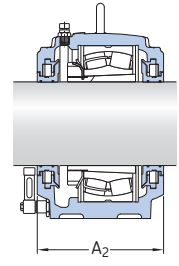

Oil seals, TURT/TURA design

Shaft diameter d_a	**Housing**	**Appropriate parts** Bearing[1]	Adapter sleeve[2]	Locating ring[3]	Seals	End cover	Width incl. seals A_2
mm	–	–					mm
240	**SNL 3052**	23052 CCK/W33 23052-2CS5K C 3052 K	OH 3052 H OH 3052 HE OH 3052 H	2 FRB 22/400 2 FRB 22/400 2 FRB 22/400	TS 52 TNF 52	ETS 52	315 394
	SNL 3052 TURT	23052 CCK/W33	OH 3052 H	2 FRB 22/400	included	ETS 3052 R	305
	SNL 3052 TURA	C 3052 K	OH 3052 H	2 FRB 22/400	included	ETS 3052 R	305
	SNL 3152	23152 CCK/W33 23152-2CS5K C 3152 K	OH 3152 H OH 3152 HTL OH 3152 HTL	2 FRB 10/440 2 FRB 10/440 2 FRB 10/440	TS 52 TNF 52	ETS 52	330 412
	SNL 3152 TURT	23152 CCK/W33	OH 3152 H	2 FRB 10/440	included	ETS 3152 R	315
	SNL 3152 TURA	C 3152 K	OH 3152 HTL	2 FRB 10/440	included	ETS 3152 R	315
	SNL 3252	23252 CCK/W33	OH 2352 H	2 FRB 10/480	TS 64/240 TNF 64/240	ETS 64	360 434
	SNL 3064	22252 CCK/W33	OH 3152 H	2 FRB 25.5/480	TS 64/240 TNF 64/240	ETS 64	360 434
	SNL 3164	22352 CCK/W33	OH 2352 H	2 FRB 15.5/540	TS 64/240 TNF 64/240	ETS 64	380 454

[1] 222(00), 230(00), 231(00), 232(00)...– spherical roller bearing, C... – CARB toroidal roller bearing. Only typical bearings are listed. Other bearing variants can also fit the housing.
[2] The adapter sleeve fits the bearing in the same line only. Only typical adapter sleeves are listed. Other variants can also fit the housing.
[3] The locating rings fit the bearing in the same line only.

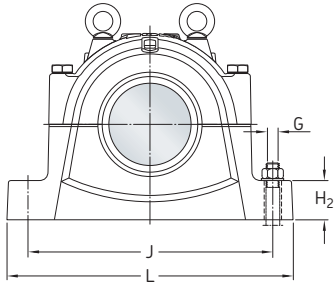

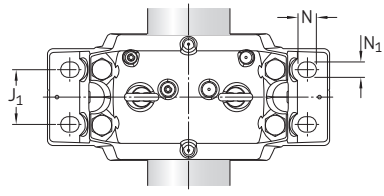

Shaft diameter	**Dimensions**														**Eye bolt** according to DIN 580	**Mass** Housing
d_a	A	A_1	C_a	D_a	H	H_1	H_2	J	J_1	L	N	N_1	s	G		
mm	mm														–	kg
240	310	260	148	400	474	240	95	600	150	700	42	35	12	30	M 24	187
	310	260	148	400	474	240	95	600	150	700	42	35	12	30	M 24	187
	310	260	148	400	474	240	95	600	150	700	42	35	12	30	M 24	187
	320	280	164	440	516	260	100	650	160	770	50	42	13	36	M 24	221
	320	280	164	440	516	260	100	650	160	770	50	42	13	36	M 24	221
	320	280	164	440	516	260	100	650	160	770	50	42	13	36	M 24	221
	350	310	194	480	591	300	110	710	190	830	50	42	22	36	M 30	301
	350	310	181	480	591	300	110	710	190	830	50	42	22	36	M 30	301
	370	330	196	540	631	320	115	750	200	880	50	42	23	36	M 30	339

5.1 Large SNL plummer block housings for bearings on an adapter sleeve, metric shafts

d_a **260** mm

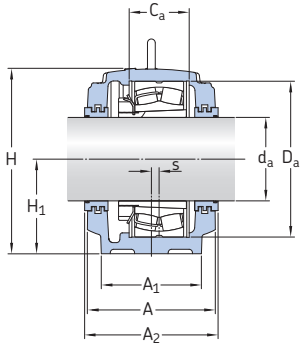

Labyrinth seals, TS design

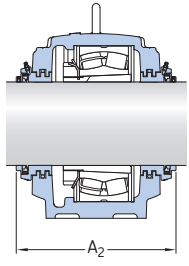

Taconite seals, TNF design

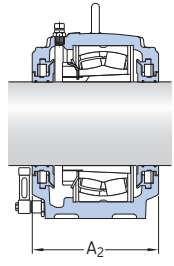

Oil seals, TURT/TURA design

Shaft diameter d_a	**Housing**	**Appropriate parts** Bearing[1]	Adapter sleeve[2]	Locating ring[3]	Seals	End cover	Width incl. seals A_2
mm	–	–					mm
260	**SNL 3056**	23056 CCK/W33 C 3056 K	OH 3056 H OH 3056 H	6 FRB 10/420 6 FRB 10/420	TS 56 TNF 56	ETS 56	330 404
	SNL 3056 TURT	23056 CCK/W33	OH 3056 H	6 FRB 10/420	included	ETS 3056 R	315
	SNL 3056 TURA	C 3056 K	OH 3056 H	6 FRB 10/420	included	ETS 3056 R	315
	SNL 3156	23156 CCK/W33 23156-2CS5K C 3156 K	OH 3156 H OH 3156 HTL OH 3156 HTL	2 FRB 10/460 2 FRB 10/460 2 FRB 10/460	TS 56 TNF 56	ETS 56	330 404
	SNL 3156 TURT	23156 CCK/W33	OH 3156 H	2 FRB 10/460	included	ETS 3156 R	315
	SNL 3156 TURA	C 3156 K	OH 3156 HTL	2 FRB 10/460	included	ETS 3156 R	315
	SNL 3256	23256 CCK/W33	OH 2356 H	2 FRB 10/500	TS 60/260 TNF 60/260	ETS 60	360 434
	SNL 3160	22256 CCK/W33	OH 3156 H	2 FRB 25/500	TS 60/260 TNF 60/260	ETS 60	360 434
	SNL 3168 L	22356 CCK/W33	OH 2356 H	2 FRB 17.5/580	TS 68/260 TNF 68/260	ETS 68	410 483

[1] 222(00), 230(00), 231(00), 232(00)...– spherical roller bearing, C... – CARB toroidal roller bearing. Only typical bearings are listed. Other bearing variants can also fit the housing.
[2] The adapter sleeve fits the bearing in the same line only. Only typical adapter sleeves are listed. Other variants can also fit the housing.
[3] The locating rings fit the bearing in the same line only.

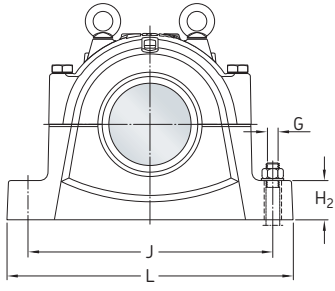

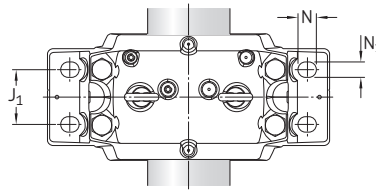

Shaft diameter	**Dimensions**														**Eye bolt** according to DIN 580	**Mass** Housing
d_a	A	A_1	C_a	D_a	H	H_1	H_2	J	J_1	L	N	N_1	s	G		
mm	mm														–	kg
260	320	280	166	420	516	260	100	650	160	770	50	42	13	36	M 24	221
	320	280	166	420	516	260	100	650	160	770	50	42	13	36	M 24	221
	320	280	166	420	516	260	100	650	160	770	50	42	13	36	M 24	221
	320	280	166	460	550	280	105	670	160	790	50	42	16	36	M 24	252
	320	280	166	460	550	280	105	670	160	790	50	42	16	36	M 24	252
	320	280	166	460	550	280	105	670	160	790	50	42	16	36	M 24	252
	350	310	196	500	591	300	110	710	190	830	50	42	22	36	M 30	301
	350	310	180	500	591	300	110	710	190	830	50	42	22	36	M 30	301
	400	360	210	580	675	340	120	810	220	950	50	42	24	36	M 30	427

5.1 Large SNL plummer block housings for bearings on an adapter sleeve, metric shafts

d_a **280** mm

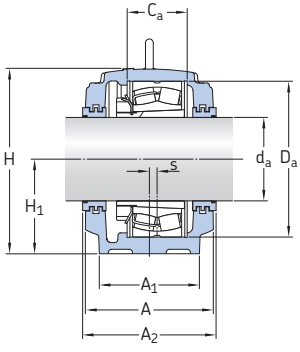

Labyrinth seals, TS design

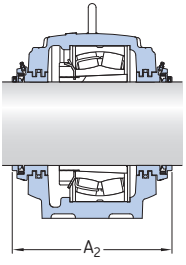

Taconite seals, TNF design

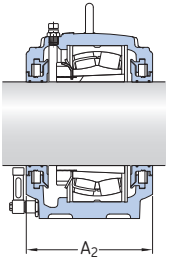

Oil seals, TURT/TURA design

Shaft diameter d_a	**Housing**	**Appropriate parts** Bearing[1]	Adapter sleeve[2]	Locating ring[3]	Seals	End cover	Width incl. seals A_2
mm	–	–					mm
280	**SNL 3060**	23060 CCK/W33 C 3060 KM	OH 3060 H OH 3060 H	2 FRB 25/460 2 FRB 25/460	TS 60 TNF 60	ETS 60	330 404
	SNL 3060 TURT	23060 CCK/W33	OH 3060 H	2 FRB 25/460	included	ETS 3060 R	315
	SNL 3060 TURA	C 3060 KM	OH 3060 H	2 FRB 25/460	included	ETS 3060 R	315
	SNL 3160	23160 CCK/W33 23160-2CS5K C 3160 K	OH 3160 H OH 3160 HE OH 3160 H	2 FRB 10/500 2 FRB 10/500 2 FRB 10/500	TS 60 TNF 60	ETS 60	360 434
	SNL 3160 TURT	23160 CCK/W33	OH 3160 H	2 FRB 10/500	included	ETS 3160 R	345
	SNL 3160 TURA	C 3160 K	OH 3160 H	2 FRB 10/500	included	ETS 3160 R	345
	SNL 3260	23260 CCK/W33	OH 3260 H	2 FRB 10/540	TS 64/280 TNF 64/280	ETS 64	380 454
	SNL 3164	22260 CCK/W33	OH 3160 H	2 FRB 28/540	TS 64/280 TNF 64/280	ETS 64	380 454

1) 222(00), 230(00), 231(00), 232(00)...– spherical roller bearing, C... – CARB toroidal roller bearing. Only typical bearings are listed. Other bearing variants can also fit the housing.
2) The adapter sleeve fits the bearing in the same line only. Only typical adapter sleeves are listed. Other variants can also fit the housing.
3) The locating rings fit the bearing in the same line only.

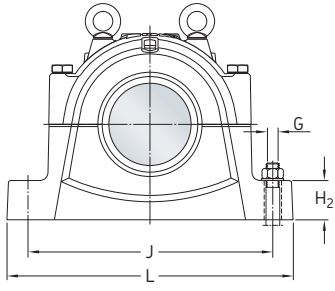

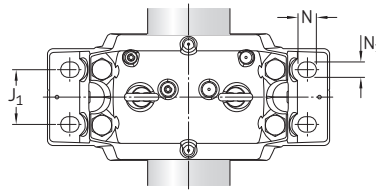

Shaft diameter	**Dimensions**														**Eye bolt** according to DIN 580	**Mass** Housing
d_a	A	A_1	C_a	D_a	H	H_1	H_2	J	J_1	L	N	N_1	s	G		
mm	mm														–	kg
280	320	280	168	460	550	280	105	670	160	790	50	42	16	36	M 24	252
	320	280	168	460	550	280	105	670	160	790	50	42	16	36	M 24	252
	320	280	168	460	550	280	105	670	160	790	50	42	16	36	M 24	252
	350	310	180	500	591	300	110	710	190	830	50	42	22	36	M 30	301
	350	310	180	500	591	300	110	710	190	830	50	42	22	36	M 30	301
	350	310	180	500	591	300	110	710	190	830	50	42	22	36	M 30	301
	370	330	212	540	631	320	115	750	200	880	50	42	23	36	M 30	339
	370	330	196	540	631	320	115	750	200	880	50	42	23	36	M 30	339

5.1 Large SNL plummer block housings for bearings on an adapter sleeve, metric shafts

d_a **300** mm

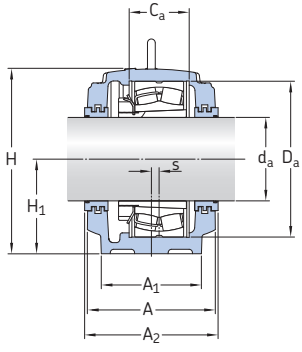

Labyrinth seals, TS design

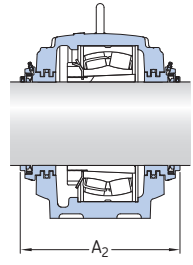

Taconite seals, TNF design

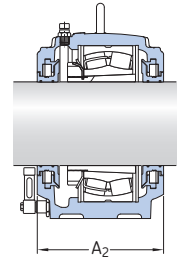

Oil seals, TURT/TURA design

Shaft diameter d_a	**Housing**	**Appropriate parts** Bearing[1]	Adapter sleeve[2]	Locating ring[3]	Seals	End cover	Width incl. seals A_2
mm	–	–					mm
300	**SNL 3064**	23064 CCK/W33 C 3064 KM	OH 3064 H OH 3064 H	6 FRB 10/480 6 FRB 10/480	TS 64 TNF 64	ETS 64	360 434
	SNL 3064 TURT	23064 CCK/W33	OH 3064 H	6 FRB 10/480	included	ETS 3064 R	345
	SNL 3064 TURA	C 3064 KM	OH 3064 H	6 FRB 10/480	included	ETS 3064 R	345
	SNL 3164	23164 CCK/W33 23164-2CS5K C 3164 KM	OH 3164 H OH 3164 H OH 3164 H	2 FRB 10/540 2 FRB 10/540 2 FRB 10/540	TS 64 TNF 64	ETS 64	380 454
	SNL 3164 TURT	23164 CCK/W33	OH 3164 H	2 FRB 10/540	included	ETS 3164 R	365
	SNL 3164 TURA	C 3164 KM	OH 3164 H	2 FRB 10/540	included	ETS 3164 R	365
	SNL 3264 F	23264 CCK/W33	OH 3264 H	–	TS 68/300 TNF 68/300	ETS 68	410 483
	SNL 3264 L	23264 CCK/W33	OH 3264 H	–	TS 68/300 TNF 68/300	ETS 68	410 483
	SNL 3168 F	22264 CCK/W33	OH 3164 H	2 FRB 20/580	TS 68/300 TNF 68/300	ETS 68	410 483

[1] 222(00), 230(00), 231(00), 232(00)...– spherical roller bearing, C... – CARB toroidal roller bearing. Only typical bearings are listed. Other bearing variants can also fit the housing.
[2] The adapter sleeve fits the bearing in the same line only. Only typical adapter sleeves are listed. Other variants can also fit the housing.
[3] The locating rings fit the bearing in the same line only.

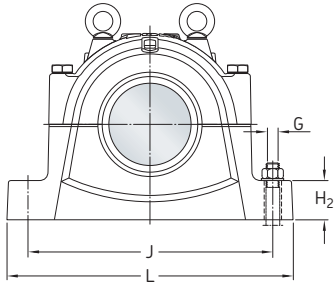

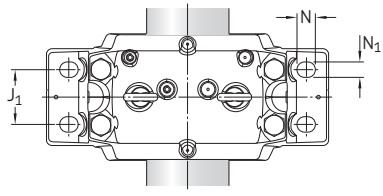

Shaft diameter	Dimensions														Eye bolt according to DIN 580	Mass Housing
d_a	A	A_1	C_a	D_a	H	H_1	H_2	J	J_1	L	N	N_1	s	G		
mm	mm														–	kg
300	350	310	181	480	591	300	110	710	190	830	50	42	22	36	M 30	301
	350	310	181	480	591	300	110	710	190	830	50	42	22	36	M 30	301
	350	310	181	480	591	300	110	710	190	830	50	42	22	36	M 30	301
	370	330	196	540	631	320	115	750	200	880	50	42	23	36	M 30	339
	370	330	196	540	631	320	115	750	200	880	50	42	23	36	M 30	339
	370	330	196	540	631	320	115	750	200	880	50	42	23	36	M 30	339
	400	360	208	580	675	340	120	810	220	950	50	42	24	36	M 30	430
	400	360	228	580	675	340	120	810	220	950	50	42	24	36	M 30	427
	400	360	190	580	675	340	120	810	220	950	50	42	24	36	M 30	430

5.1 Large SNL plummer block housings for bearings on an adapter sleeve, metric shafts

d_a **320** mm

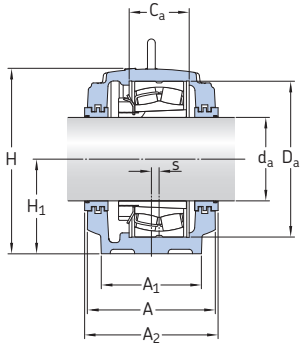

Labyrinth seals, TS design

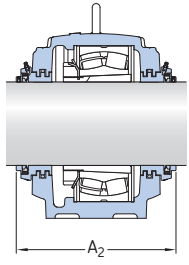

Taconite seals, TNF design

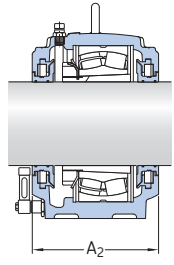

Oil seals, TURT/TURA design

Shaft diameter d_a	**Housing**	**Appropriate parts** Bearing[1]	Adapter sleeve[2]	Locating ring[3]	Seals	End cover	Width incl. seals A_2
mm	–	–					mm
320	**SNL 3068**	23068 CCK/W33 C 3068 KM	OH 3068 H OH 3068 H	4 FRB 16/520 4 FRB 16/520	TS 68 TNF 68	ETS 68	380 453
	SNL 3068 TURT	23068 CCK/W33	OH 3068 H	4 FRB 16/520	included	ETS 3068 R	365
	SNL 3068 TURA	C 3068 KM	OH 3068 H	4 FRB 16/520	included	ETS 3068 R	365
	SNL 3168 F	23168 CCK/W33 23168-2CS5K C 3168 KM	OH 3168 H OH 3168 HE OH 3168 H	– – –	TS 68 TNF 68	ETS 68	410 483
	SNL 3168 FTURT	23168 CCK/W33	OH 3168 H	–	included	ETS 3168 R	395
	SNL 3168 FTURA	C 3168 KM	OH 3168 H	–	included	ETS 3168 R	395
	SNL 3168 L	23168 CCK/W33	OH 3168 H	–	TS 68 TNF 68	ETS 68	410 483
	SNL 3168 LTURT	23168 CCK/W33	OH 3168 H	–	included	ETS 3168 R	395
	SNL 3268 F	23268 CAK/W33	OH 3268 H	–	TS 76/320 TNF 76/320	ETS 76	410 483
	SNL 3268 L	23268 CAK/W33	OH 3268 H	–	TS 76/320 TNF 76/320	ETS 76	410 483

[1] 222(00), 230(00), 231(00), 232(00)...– spherical roller bearing, C... – CARB toroidal roller bearing. Only typical bearings are listed. Other bearing variants can also fit the housing.
[2] The adapter sleeve fits the bearing in the same line only. Only typical adapter sleeves are listed. Other variants can also fit the housing.
[3] The locating rings fit the bearing in the same line only.

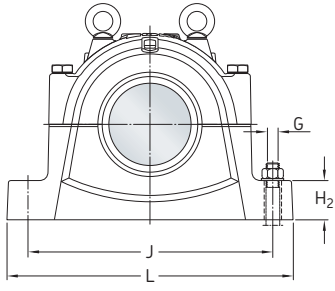

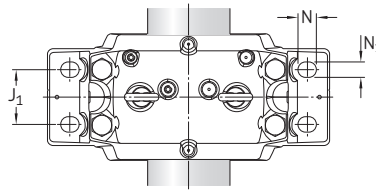

Shaft diameter	**Dimensions**														**Eye bolt** according to DIN 580	**Mass** Housing
d_a	A	A_1	C_a	D_a	H	H_1	H_2	J	J_1	L	N	N_1	s	G		
mm	mm														–	kg
320	370	330	197	520	631	320	115	750	200	880	50	42	23	36	M 30	339
	370	330	197	520	631	320	115	750	200	880	50	42	23	36	M 30	339
	370	330	197	520	631	320	115	750	200	880	50	42	23	36	M 30	339
	400	360	190	580	675	340	120	810	220	950	50	42	24	36	M 30	430
	400	360	190	580	675	340	120	810	220	950	50	42	24	36	M 30	430
	400	360	190	580	675	340	120	810	220	950	50	42	24	36	M 30	430
	400	360	210	580	675	340	120	810	220	950	50	42	24	36	M 30	427
	400	360	210	580	675	340	120	810	220	950	50	42	24	36	M 30	427
	400	360	224	620	715	360	120	870	220	1 040	50	42	30	36	M 36	473
	400	360	244	620	715	360	120	870	220	1 040	50	42	30	36	M 36	470

5.1 Large SNL plummer block housings for bearings on an adapter sleeve, metric shafts

d_a **340** mm

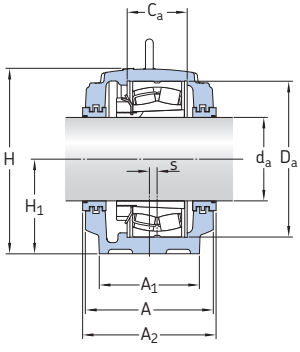

Labyrinth seals, TS design

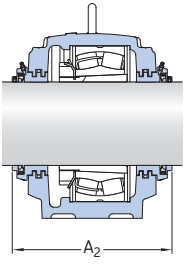

Taconite seals, TNF design

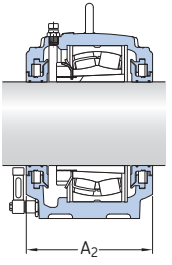

Oil seals, TURT/TURA design

Shaft diameter d_a	**Housing**	**Appropriate parts** Bearing[1]	Adapter sleeve[2]	Locating ring[3]	Seals	End cover	Width incl. seals A_2
mm	–	–					mm
340	**SNL 3072**	23072 CCK/W33 C 3072 KM	OH 3072 H OH 3072 H	4 FRB 16/540 4 FRB 16/540	TS 72 TNF 72	ETS 72	380 453
	SNL 3072 TURT	23072 CCK/W33	OH 3072 H	4 FRB 16/540	included	ETS 3072 R	365
	SNL 3072 TURA	C 3072 KM	OH 3072 H	4 FRB 16/540	included	ETS 3072 R	365
	SNL 3172 F	23172 CCK/W33 23172-2CS5K C 3172 KM	OH 3172 H OH 3172 HE OH 3172 H	– – –	TS 72 TNF 72	ETS 72	410 483
	SNL 3172 FTURT	23172 CCK/W33	OH 3172 H	–	included	ETS 3172 R	395
	SNL 3172 FTURA	C 3172 KM	OH 3172 H	–	included	ETS 3172 R	395
	SNL 3172 L	23172 CCK/W33 23172-2CS5K	OH 3172 H OH 3172 HE	– –	TS 72 TNF 72	ETS 72	410 483
	SNL 3172 LTURT	23172 CCK/W33	OH 3172 H	–	included	ETS 3172 R	395
	SNL 3272 F	23272 CAK/W33	OH 3272 H	–	TS 80/340 TNF 80/340	ETS 80	440 513
	SNL 3272 L	23272 CAK/W33	OH 3272 H	–	TS 80/340 TNF 80/340	ETS 80	440 513
	SNL 3180 L	22272 CAK/W33	OH 3172 H	2 FRB 25/650	TS 80/340 TNF 80/340	ETS 80	440 513

1) 222(00), 230(00), 231(00), 232(00)... – spherical roller bearing, C... – CARB toroidal roller bearing. Only typical bearings are listed. Other bearing variants can also fit the housing.
2) The adapter sleeve fits the bearing in the same line only. Only typical adapter sleeves are listed. Other variants can also fit the housing.
3) The locating rings fit the bearing in the same line only.

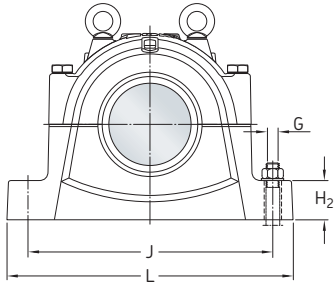

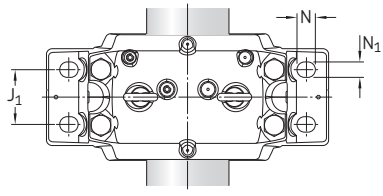

Shaft diameter	**Dimensions**														**Eye bolt** according to DIN 580	**Mass** Housing
d_a	A	A_1	C_a	D_a	H	H_1	H_2	J	J_1	L	N	N_1	s	G		
mm	mm														–	kg
340	370	330	198	540	631	320	115	750	200	880	50	42	23	36	M 30	339
	370	330	198	540	631	320	115	750	200	880	50	42	23	36	M 30	339
	370	330	198	540	631	320	115	750	200	880	50	42	23	36	M 30	339
	400	360	192	600	695	350	120	840	220	1 000	50	42	30	36	M 36	458
	400	360	192	600	695	350	120	840	220	1 000	50	42	30	36	M 36	458
	400	360	192	600	695	350	120	840	220	1 000	50	42	30	36	M 36	458
	400	360	212	600	695	350	120	840	220	1 000	50	42	30	36	M 36	454
	400	360	212	600	695	350	120	840	220	1 000	50	42	30	36	M 36	454
	430	390	232	650	755	380	125	950	240	1 120	60	48	30	42	M 42	595
	430	390	252	650	755	380	125	950	240	1 120	60	48	30	42	M 42	595
	430	390	220	650	755	380	125	950	240	1 120	60	48	30	42	M 42	595

5.1 Large SNL plummer block housings for bearings on an adapter sleeve, metric shafts

d_a **360** mm

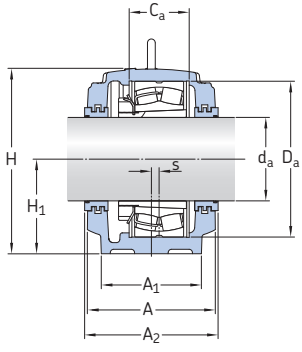

Labyrinth seals, TS design

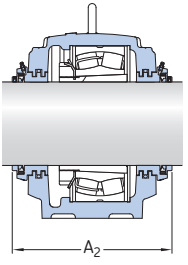

Taconite seals, TNF design

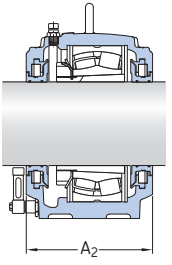

Oil seals, TURT/TURA design

Shaft diameter d_a	**Housing**	**Appropriate parts** Bearing[1]	Adapter sleeve[2]	Seals	End cover	Width incl. seals A_2
mm	–	–				mm
360	**SNL 3076 F**	23076 CCK/W33 C 3076 KM	OH 3076 H OH 3076 H	TS 76 TNF 76	ETS 76	410 483
	SNL 3076 FTURT	23076 CCK/W33	OH 3076 H	included	ETS 3076 R	395
	SNL 3076 FTURA	C 3076 KM	OH 3076 H	included	ETS 3076 R	395
	SNL 3076 L	23076 CCK/W33	OH 3076 H	TS 76 TNF 76	ETS 76	410 483
	SNL 3076 LTURT	23076 CCK/W33	OH 3076 H	included	ETS 3076 R	395
	SNL 3176 F	23176 CAK/W33 C 3176 KMB	OH 3176 H OH 3176 HE	TS 76 TNF 76	ETS 76	410 483
	SNL 3176 FTURT	23176 CAK/W33	OH 3176 H	included	ETS 3176 R	395
	SNL 3176 FTURA	C 3176 KMB	OH 3176 HE	included	ETS 3176 R	395
	SNL 3176 L	23176 CAK/W33	OH 3176 H	TS 76 TNF 76	ETS 76	410 483
	SNL 3176 LTURT	23176 CAK/W33	OH 3176 H	included	ETS 3176 R	395
	SNL 3276 F	23276 CAK/W33	OH 3276 H	TS 92/360 TNF 92/360	ETS 92	470 543
	SNL 3276 L	23276 CAK/W33	OH 3276 H	TS 92/360 TNF 92/360	ETS 92	470 543

[1] 222(00), 230(00), 231(00), 232(00)...– spherical roller bearing, C... – CARB toroidal roller bearing. Only typical bearings are listed. Other bearing variants can also fit the housing.
[2] The adapter sleeve fits the bearing in the same line only. Only typical adapter sleeves are listed. Other variants can also fit the housing.

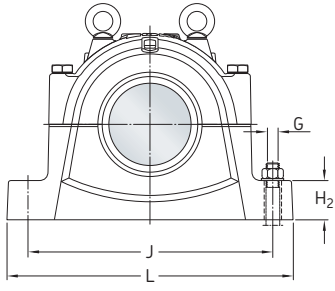

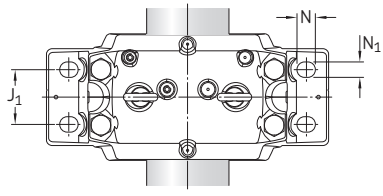

Shaft diameter	**Dimensions**														**Eye bolt** according to DIN 580	**Mass** Housing
d_a	A	A_1	C_a	D_a	H	H_1	H_2	J	J_1	L	N	N_1	s	G		
mm	mm														–	kg
360	400	360	135	560	675	340	120	810	220	950	50	42	24	36	M 30	430
	400	360	135	560	675	340	120	810	220	950	50	42	24	36	M 30	430
	400	360	135	560	675	340	120	810	220	950	50	42	24	36	M 30	430
	400	360	180	560	675	340	120	810	220	950	50	42	24	36	M 30	427
	400	360	180	560	675	340	120	810	220	950	50	42	24	36	M 30	427
	400	360	194	620	715	360	120	870	220	1 040	50	42	30	36	M 36	473
	400	360	194	620	715	360	120	870	220	1 040	50	42	30	36	M 36	473
	400	360	194	620	715	360	120	870	220	1 040	50	42	30	36	M 36	473
	400	360	214	620	715	360	120	870	220	1 040	50	42	30	36	M 36	470
	400	360	214	620	715	360	120	870	220	1 040	50	42	30	36	M 36	470
	460	420	240	680	810	410	130	1 000	260	1 170	60	48	35	42	M 42	716
	460	420	260	680	810	410	130	1 000	260	1 170	60	48	35	42	M 42	709

5.1 Large SNL plummer block housings for bearings on an adapter sleeve, metric shafts

d_a **380** mm

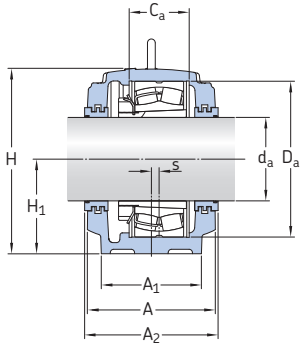

Labyrinth seals, TS design

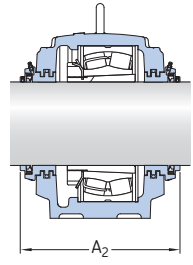

Taconite seals, TNF design

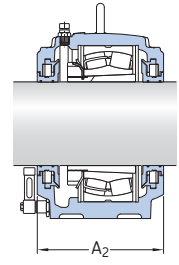

Oil seals, TURT/TURA design

Shaft diameter d_a	Housing	Appropriate parts Bearing[1]	Adapter sleeve[2]	Seals	End cover	Width incl. seals A_2
mm	–	–				mm
380	**SNL 3080 F**	23080 CCK/W33 C 3080 KM	OH 3080 H OH 3080 H	TS 80 TNF 80	ETS 80	410 483
	SNL 3080 FTURT	23080 CCK/W33	OH 3080 H	included	ETS 3080 R	395
	SNL 3080 FTURA	C 3080 KM	OH 3080 H	included	ETS 3080 R	395
	SNL 3080 L	23080 CCK/W33	OH 3080 H	TS 80 TNF 80	ETS 80	410 483
	SNL 3080 LTURT	23080 CCK/W33	OH 3080 H	included	ETS 3080 R	395
	SNL 3180 F	23180 CAK/W33 23180-2CS5K C 3180 KM	OH 3180 H OH 3180 HE OH 3180 H	TS 80 TNF 80	ETS 80	440 513
	SNL 3180 FTURT	23180 CAK/W33	OH 3180 H	included	ETS 3180 R	425
	SNL 3180 FTURA	C 3180 KM	OH 3180 H	included	ETS 3180 R	425
	SNL 3180 L	23180 CAK/W33 23180-2CS5K	OH 3180 H OH 3180 HE	TS 80 TNF 80	ETS 80	440 513
	SNL 3180 LTURT	23180 CAK/W33	OH 3180 H	included	ETS 3180 R	425
	SNL 3280 F	23280 CAK/W33	OH 3280 H	TS 88/380 TNF 88/380	ETS 88	470 543
	SNL 3280 L	23280 CAK/W33	OH 3280 H	TS 88/380 TNF 88/380	ETS 88	470 543

[1] 222(00), 230(00), 231(00), 232(00)...– spherical roller bearing, C... – CARB toroidal roller bearing. Only typical bearings are listed. Other bearing variants can also fit the housing.
[2] The adapter sleeve fits the bearing in the same line only. Only typical adapter sleeves are listed. Other variants can also fit the housing.

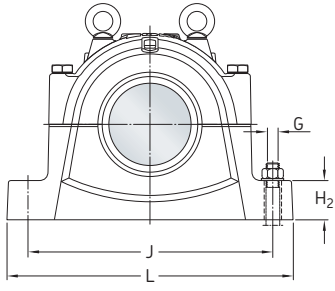

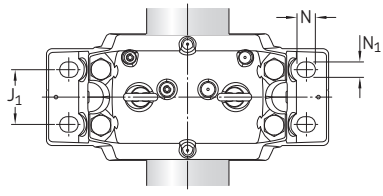

Shaft diameter	Dimensions														Eye bolt according to DIN 580	Mass Housing
d_a	A	A_1	C_a	D_a	H	H_1	H_2	J	J_1	L	N	N_1	s	G		
mm	mm														–	kg
380	400	360	148	600	695	350	120	840	220	1 000	50	42	30	36	M 36	458
	400	360	148	600	695	350	120	840	220	1 000	50	42	30	36	M 36	458
	400	360	148	600	695	350	120	840	220	1 000	50	42	30	36	M 36	458
	400	360	192	600	695	350	120	840	220	1 000	50	42	30	36	M 36	454
	400	360	192	600	695	350	120	840	220	1 000	50	42	30	36	M 36	454
	430	390	200	650	755	380	125	950	240	1 120	60	48	30	42	M 42	595
	430	390	200	650	755	380	125	950	240	1 120	60	48	30	42	M 42	595
	430	390	200	650	755	380	125	950	240	1 120	60	48	30	42	M 42	595
	430	390	220	650	755	380	125	950	240	1 120	60	48	30	42	M 42	595
	430	390	220	650	755	380	125	950	240	1 120	60	48	30	42	M 42	595
	460	430	256	720	835	420	135	1 030	260	1 220	60	48	35	42	M 42	755
	460	430	276	720	835	420	135	1 030	260	1 220	60	48	35	42	M 42	751

5.1 Large SNL plummer block housings for bearings on an adapter sleeve, metric shafts

d_a **400** mm

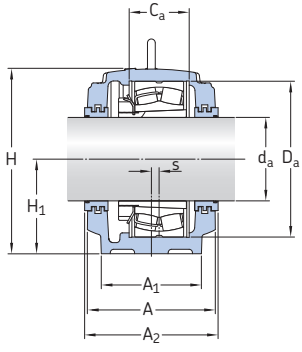

Labyrinth seals, TS design

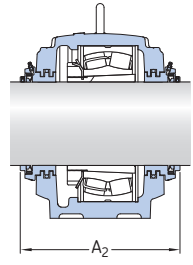

Taconite seals, TNF design

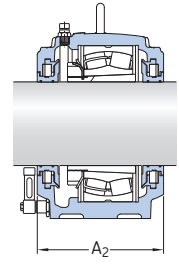

Oil seals, TURT/TURA design

Shaft diameter d_a	**Housing**	**Appropriate parts** Bearing[1]	Adapter sleeve[2]	Seals	End cover	Width incl. seals A_2
mm	–	–				mm
400	**SNL 3084 F**	23084 CAK/W33 C 3084 KM	OH 3084 H OH 3084 H	TS 84 TNF 84	ETS 84	410 483
	SNL 3084 FTURT	23084 CAK/W33	OH 3084 H	included	ETS 3084 R	395
	SNL 3084 FTURA	C 3084 KM	OH 3084 H	included	ETS 3084 R	395
	SNL 3084 L	23084 CAK/W33	OH 3084 H	TS 84 TNF 84	ETS 84	410 483
	SNL 3084 LTURT	23084 CAK/W33	OH 3084 H	included	ETS 3084 R	395
	SNL 3184 F	23184 CKJ/W33 C 3184 KM	OH 3184 H OH 3184 H	TS 84 TNF 84	ETS 84	470 543
	SNL 3184 FTURT	23184 CKJ/W33	OH 3184 H	included	ETS 3184 R	450
	SNL 3184 FTURA	C 3184 KM	OH 3184 H	included	ETS 3184 R	450
	SNL 3184 L	23184 CKJ/W33	OH 3184 H	TS 84 TNF 84	ETS 84	470 543
	SNL 3184 LTURT	23184 CKJ/W33	OH 3184 H	included	ETS 3184 R	450
	SNL 3284 F	23284 CAK/W33	OH 3284 H	TS 92/400 TNF 92/400	ETS 92	480 553
	SNL 3284 L	23284 CAK/W33	OH 3284 H	TS 92/400 TNF 92/400	ETS 92	480 553

[1] 222(00), 230(00), 231(00), 232(00)... – spherical roller bearing, C... – CARB toroidal roller bearing. Only typical bearings are listed. Other bearing variants can also fit the housing.
[2] The adapter sleeve fits the bearing in the same line only. Only typical adapter sleeves are listed. Other variants can also fit the housing.

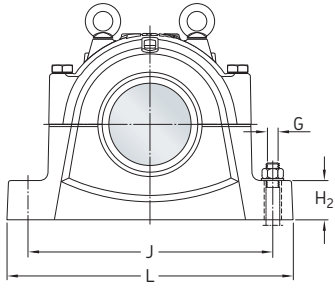

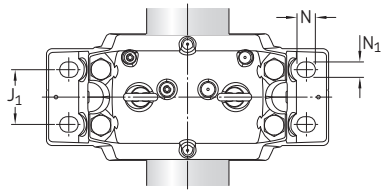

Shaft diameter	Dimensions														Eye bolt according to DIN 580	Mass Housing
d_a	A	A_1	C_a	D_a	H	H_1	H_2	J	J_1	L	N	N_1	s	G		
mm	mm														–	kg
400	400	360	150	620	715	360	120	870	220	1 040	50	42	30	36	M 36	473
	400	360	150	620	715	360	120	870	220	1 040	50	42	30	36	M 36	473
	400	360	150	620	715	360	120	870	220	1 040	50	42	30	36	M 36	473
	400	360	194	620	715	360	120	870	220	1 040	50	42	30	36	M 36	470
	400	360	194	620	715	360	120	870	220	1 040	50	42	30	36	M 36	470
	460	420	224	700	810	410	130	1 000	260	1 170	60	48	35	42	M 42	716
	460	420	224	700	810	410	130	1 000	260	1 170	60	48	35	42	M 42	716
	460	420	224	700	810	410	130	1 000	260	1 170	60	48	35	42	M 42	716
	460	420	244	700	810	410	130	1 000	260	1 170	60	48	35	42	M 42	709
	460	420	244	700	810	410	130	1 000	260	1 170	60	48	35	42	M 42	709
	470	440	272	760	880	440	145	1 070	260	1 280	60	48	40	42	M 48	865
	470	440	292	760	880	440	145	1 070	260	1 280	60	48	40	42	M 48	859

5.1 Large SNL plummer block housings for bearings on an adapter sleeve, metric shafts

d_a **410** mm

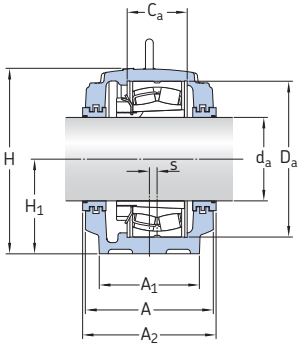

Labyrinth seals, TS design

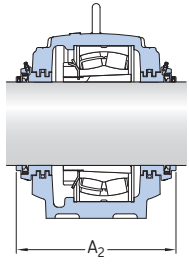

Taconite seals, TNF design

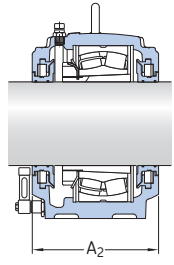

Oil seals, TURT/TURA design

Shaft diameter d_a	Housing	Appropriate parts Bearing[1]	Adapter sleeve[2]	Seals	End cover	Width incl. seals A_2
mm	–	–				mm
410	**SNL 3088 F**	23088 CAK/W33 C 3088 KMB	OH 3088 H OH 3088 HE	TS 88 TNF 88	ETS 88	440 513
	SNL 3088 FTURT	23088 CAK/W33	OH 3088 H	included	ETS 3088 R	425
	SNL 3088 FTURA	C 3088 KMB	OH 3088 HE	included	ETS 3088 R	425
	SNL 3088 L	23088 CAK/W33	OH 3088 H	TS 88 TNF 88	ETS 88	440 513
	SNL 3088 LTURT	23088 CAK/W33	OH 3088 H	included	ETS 3088 R	425
	SNL 3188 F	23188 CAK/W33 C 3188 KMB	OH 3188 H OH 3188 HE	TS 88 TNF 88	ETS 88	470 543
	SNL 3188 FTURT	23188 CAK/W33	OH 3188 H	included	ETS 3188 R	450
	SNL 3188 FTURA	C 3188 KMB	OH 3188 HE	included	ETS 3188 R	450
	SNL 3188 L	23188 CAK/W33	OH 3188 H	TS 88 TNF 88	ETS 88	470 543
	SNL 3188 LTURT	23188 CAK/W33	OH 3188 H	included	ETS 3188 R	450
	SNL 3288 F	23288 CAK/W33	OH 3288 H	TS 96/410 TNF 96/410	ETS 96	480 553
	SNL 3288 L	23288 CAK/W33	OH 3288 H	TS 96/410 TNF 96/410	ETS 96	480 553

[1] 222(00), 230(00), 231(00), 232(00)... – spherical roller bearing, C... – CARB toroidal roller bearing. Only typical bearings are listed. Other bearing variants can also fit the housing.
[2] The adapter sleeve fits the bearing in the same line only. Only typical adapter sleeves are listed. Other variants can also fit the housing.

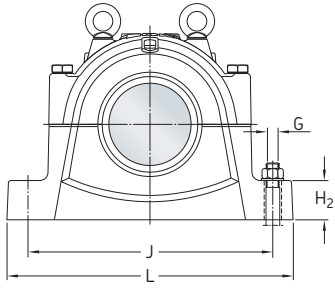

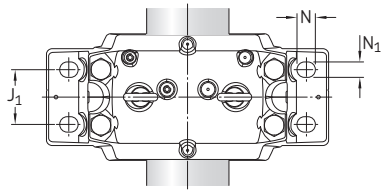

Shaft diameter	Dimensions														Eye bolt according to DIN 580	Mass Housing
d_a	A	A_1	C_a	D_a	H	H_1	H_2	J	J_1	L	N	N_1	s	G		
mm	mm														–	kg
410	430	390	157	650	755	380	125	950	240	1 120	60	48	30	42	M 42	595
	430	390	157	650	755	380	125	950	240	1 120	60	48	30	42	M 42	595
	430	390	157	650	755	380	125	950	240	1 120	60	48	30	42	M 42	595
	430	390	200	650	755	380	125	950	240	1 120	60	48	30	42	M 42	595
	430	390	200	650	755	380	125	950	240	1 120	60	48	30	42	M 42	595
	460	430	226	720	835	420	135	1 030	260	1 220	60	48	35	42	M 42	755
	460	430	226	720	835	420	135	1 030	260	1 220	60	48	35	42	M 42	755
	460	430	226	720	835	420	135	1 030	260	1 220	60	48	35	42	M 42	755
	460	430	246	720	835	420	135	1 030	260	1 220	60	48	35	42	M 42	751
	460	430	246	720	835	420	135	1 030	260	1 220	60	48	35	42	M 42	751
	470	440	280	790	920	460	155	1 110	260	1 330	70	56	40	48	M 48	947
	470	440	300	790	920	460	155	1 110	260	1 330	70	56	40	48	M 48	941

5.1 Large SNL plummer block housings for bearings on an adapter sleeve, metric shafts

d_a **430** mm

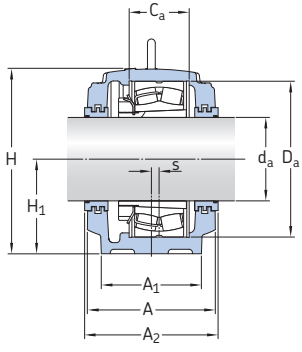

Labyrinth seals, TS design

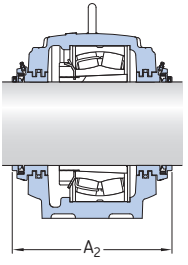

Taconite seals, TNF design

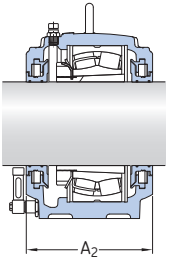

Oil seals, TURT/TURA design

Shaft diameter d_a	Housing	Appropriate parts Bearing[1]	Adapter sleeve[2]	Seals	End cover	Width incl. seals A_2
mm	–	–				mm
430	**SNL 3092 F**	23092 CAK/W33 C 3092 KM	OH 3092 H OH 3092 H	TS 92 TNF 92	ETS 92	470 543
	SNL 3092 FTURT	23092 CAK/W33	OH 3092 H	included	ETS 3092 R	455
	SNL 3092 FTURA	C 3092 KM	OH 3092 H	included	ETS 3092 R	455
	SNL 3092 L	23092 CAK/W33	OH 3092 H	TS 92 TNF 92	ETS 92	470 543
	SNL 3092 LTURT	23092 CAK/W33	OH 3092 H	included	ETS 3092 R	455
	SNL 3192 F	23192 CAK/W33 C 3192 KM	OH 3192 H OH 3192 H	TS 92 TNF 92	ETS 92	480 553
	SNL 3192 FTURT	23192 CAK/W33	OH 3192 H	included	ETS 3192 R	465
	SNL 3192 FTURA	C 3192 KM	OH 3192 H	included	ETS 3192 R	465
	SNL 3192 L	23192 CAK/W33	OH 3192 H	TS 92 TNF 92	ETS 92	480 553
	SNL 3192 LTURT	23192 CAK/W33	OH 3192 H	included	ETS 3192 R	465

[1] 222(00), 230(00), 231(00), 232(00)...– spherical roller bearing, C... – CARB toroidal roller bearing. Only typical bearings are listed. Other bearing variants can also fit the housing.
[2] The adapter sleeve fits the bearing in the same line only. Only typical adapter sleeves are listed. Other variants can also fit the housing.

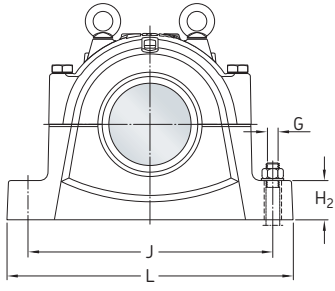

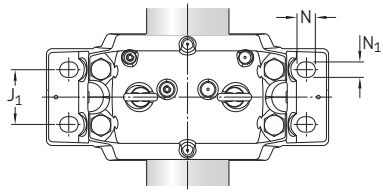

Shaft diameter	**Dimensions**														**Eye bolt** according to DIN 580	**Mass** Housing
d_a	A	A_1	C_a	D_a	H	H_1	H_2	J	J_1	L	N	N_1	s	G		
mm	mm														–	kg
430	460	420	163	680	810	410	130	1 000	260	1 170	60	48	35	42	M 42	716
	460	420	163	680	810	410	130	1 000	260	1 170	60	48	35	42	M 42	716
	460	420	163	680	810	410	130	1 000	260	1 170	60	48	35	42	M 42	716
	460	420	224	680	810	410	130	1 000	260	1 170	60	48	35	42	M 42	709
	460	420	224	680	810	410	130	1 000	260	1 170	60	48	35	42	M 42	709
	470	440	240	760	880	440	145	1 070	260	1 280	60	48	35	42	M 48	865
	470	440	240	760	880	440	145	1 070	260	1 280	60	48	35	42	M 48	865
	470	440	240	760	880	440	145	1 070	260	1 280	60	48	35	42	M 48	865
	470	440	260	760	880	440	145	1 070	260	1 280	60	48	35	42	M 48	859
	470	440	260	760	880	440	145	1 070	260	1 280	60	48	35	42	M 48	859

5.1 Large SNL plummer block housings for bearings on an adapter sleeve, metric shafts

d_a **450** mm

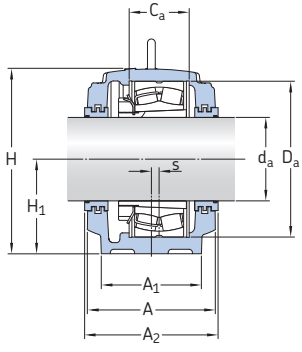

Labyrinth seals, TS design

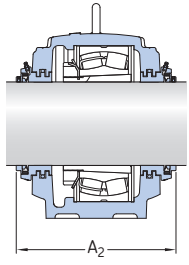

Taconite seals, TNF design

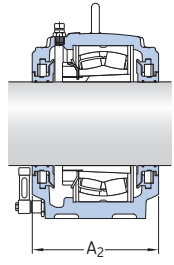

Oil seals, TURT/TURA design

Shaft diameter d_a	**Housing**	**Appropriate parts** Bearing[1]	Adapter sleeve[2]	Seals	End cover	Width incl. seals A_2
mm	–	–				mm
450	**SNL 3096 F**	23096 CAK/W33 C 3096 KM	OH 3096 H OH 3096 H	TS 96 TNF 96	ETS 96	470 543
	SNL 3096 FTURT	23096 CAK/W33	OH 3096 H	included	ETS 3096 R	455
	SNL 3096 FTURA	C 3096 KM	OH 3096 H	included	ETS 3096 R	455
	SNL 3096 L	23096 CAK/W33	OH 3096 H	TS 96 TNF 96	ETS 96	470 543
	SNL 3096 LTURT	23096 CAK/W33	OH 3096 H	included	ETS 3096 R	455
	SNL 3196 F	23196 CAK/W33 C 3196 KMB	OH 3196 H OH 3196 HE	TS 96 TNF 96	ETS 96	480 553
	SNL 3196 FTURT	23196 CAK/W33	OH 3196 H	included	ETS 3196 R	465
	SNL 3196 FTURA	C 3196 KMB	OH 3196 HE	included	ETS 3196 R	465
	SNL 3196 L	23196 CAK/W33	OH 3196 H	TS 96 TNF 96	ETS 96	480 553
	SNL 3196 LTURT	23196 CAK/W33	OH 3196 H	included	ETS 3196 R	465

[1] 222(00), 230(00), 231(00), 232(00)...– spherical roller bearing, C... – CARB toroidal roller bearing. Only typical bearings are listed. Other bearing variants can also fit the housing.
[2] The adapter sleeve fits the bearing in the same line only. Only typical adapter sleeves are listed. Other variants can also fit the housing.

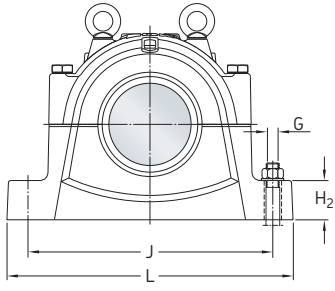

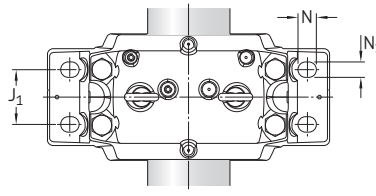

Shaft diameter	Dimensions														Eye bolt according to DIN 580	Mass Housing
d_a	A	A_1	C_a	D_a	H	H_1	H_2	J	J_1	L	N	N_1	s	G		
mm	mm														–	kg
450	460	420	165	700	810	410	130	1 000	260	1 170	60	48	35	42	M 42	716
	460	420	165	700	810	410	130	1 000	260	1 170	60	48	35	42	M 42	716
	460	420	165	700	810	410	130	1 000	260	1 170	60	48	35	42	M 42	716
	460	420	224	700	810	410	130	1 000	260	1 170	60	48	35	42	M 42	709
	460	420	224	700	810	410	130	1 000	260	1 170	60	48	35	42	M 42	709
	470	440	248	790	920	460	155	1 110	260	1 330	70	56	35	48	M 48	947
	470	440	248	790	920	460	155	1 110	260	1 330	70	56	35	48	M 48	947
	470	440	248	790	920	460	155	1 110	260	1 330	70	56	35	48	M 48	947
	470	440	268	790	920	460	155	1 110	260	1 330	70	56	35	48	M 48	941
	470	440	268	790	920	460	155	1 110	260	1 330	70	56	35	48	M 48	941

5.1 Large SNL plummer block housings for bearings on an adapter sleeve, metric shafts

d_a **470 – 500** mm

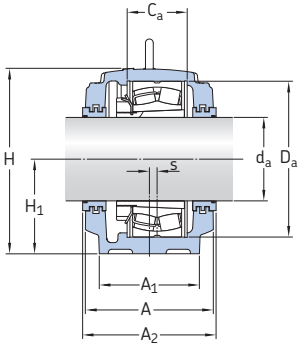

Labyrinth seals, TS design

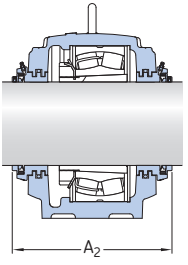

Taconite seals, TNF design

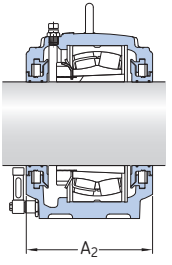

Oil seals, TURT/TURA design

Shaft diameter d_a	Housing	Appropriate parts Bearing[1]	Adapter sleeve[2]	Seals	End cover	Width incl. seals A_2
mm	–	–				mm
470	**SNL 30/500 F**	230/500 CAK/W33 C 30/500 KM	OH 30/500 H OH 30/500 H	TS 500 TNF 500	ETS 500	470 543
	SNL 30/500 FTURT	230/500 CAK/W33	OH 30/500 H	included	ETS 30/500 R	455
	SNL 30/500 FTURA	C 30/500 KM	OH 30/500 H	included	ETS 30/500 R	455
	SNL 30/500 L	230/500 CAK/W33	OH 30/500 H	TS 500 TNF 500	ETS 500	470 543
	SNL 30/500 LTURT	230/500 CAK/W33	OH 30/500 H	included	ETS 30/500 R	455
500	**SNL 30/530 F**	230/530 CAK/W33 C 30/530 KM	OH 30/530 H OH 30/530 H	TS 530 TNF 530	ETS 530	480 553
	SNL 30/530 FTURT	230/530 CAK/W33	OH 30/530 H	included	ETS 30/530 R	465
	SNL 30/530 FTURA	C 30/530 KM	OH 30/530 H	included	ETS 30/530 R	465
	SNL 30/530 L	230/530 CAK/W33	OH 30/530 H	TS 530 TNF 530	ETS 530	480 553
	SNL 30/530 LTURT	230/530 CAK/W33	OH 30/530 H	included	ETS 30/530 R	465

[1] 222(00), 230(00), 231(00), 232(00)...– spherical roller bearing, C... – CARB toroidal roller bearing. Only typical bearings are listed. Other bearing variants can also fit the housing.
[2] The adapter sleeve fits the bearing in the same line only. Only typical adapter sleeves are listed. Other variants can also fit the housing.

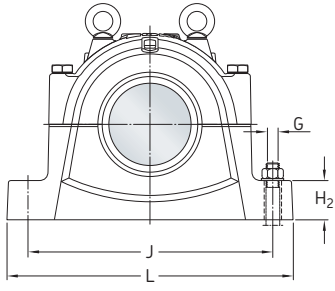

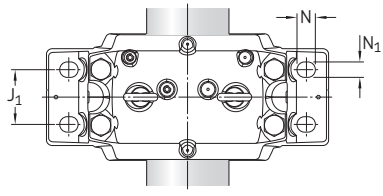

Shaft diameter	Dimensions														Eye bolt according to DIN 580	Mass Housing
d_a	A	A_1	C_a	D_a	H	H_1	H_2	J	J_1	L	N	N_1	s	G		
mm	mm														–	kg
470	460	430	167	720	835	420	135	1 030	260	1 220	60	48	35	42	M 42	755
	460	430	167	720	835	420	135	1 030	260	1 220	60	48	35	42	M 42	755
	460	430	167	720	835	420	135	1 030	260	1 220	60	48	35	42	M 42	755
	460	430	226	720	835	420	135	1 030	260	1 220	60	48	35	42	M 42	751
	460	430	226	720	835	420	135	1 030	260	1 220	60	48	35	42	M 42	751
500	470	440	185	780	920	460	155	1 110	260	1 330	70	56	35	48	M 48	947
	470	440	185	780	920	460	155	1 110	260	1 330	70	56	35	48	M 48	947
	470	440	185	780	920	460	155	1 110	260	1 330	70	56	35	48	M 48	947
	470	440	248	780	920	460	155	1 110	260	1 330	70	56	35	48	M 48	941
	470	440	248	780	920	460	155	1 110	260	1 330	70	56	35	48	M 48	941

5.2 Large SNL plummer block housings for bearings on an adapter sleeve, inch shafts

d_a **4 7/16 – 5 1/2** in.
112,713 – 139,700 mm

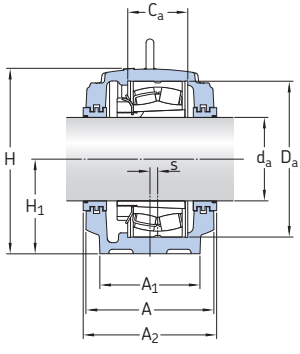

Labyrinth seals,
TS design

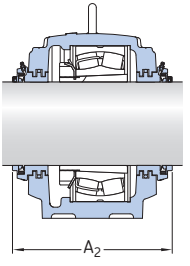

Taconite seals,
TNF design

Shaft diameter d_a	**Housing**	**Appropriate parts** Bearing[1]	Adapter sleeve[2]	Locating ring[3]	Seals	End cover	Width incl. seals A_2
in./*mm*	–	–					mm
4 7/16 *112,713*	**SNL 3134**	22326 CCK/W33 22326-2CS5K	HA 2326 HA 2326	2 FRB 7.5/280 2 FRB 7.5/280	TS 34/4.7/16 TNF 34/4.7/16	ETS 34	240 299
4 1/2 *114,300*	**SNL 3134**	22326 CCK/W33 22326-2CS5K	HE 2326 HE 2326	2 FRB 7.5/280 2 FRB 7.5/280	TS 34/4.1/2 TNF 34/4.1/2	ETS 34	240 299
4 15/16 *125,413*	**SNL 3136**	22328 CCK/W33 22328-2CS5K	HA 2328 HA 2328	2 FRB 7/300 2 FRB 7/300	TS 36/4.15/16 TNF 36/4.15/16	ETS 36	250 310
5 *127,000*	**SNL 3136**	22328 CCK/W33 22328-2CS5K	HE 2328 HE 2328	2 FRB 7/300 2 FRB 7/300	TS 36/5 TNF 36/5	ETS 36	250 310
5 3/16 *131,763*	**SNL 3138**	22330 CCK/W33 22330-2CS5K	HA 2330 HA 2330	2 FRB 8/320 2 FRB 8/320	TS 38/5.3/16 TNF 38/5.3/16	ETS 38	270 330
5 1/4 *133,350*	**SNL 3138**	22330 CCK/W33 22330-2CS5K	HE 2330 HE 2330	2 FRB 8/320 2 FRB 8/320	TS 38/5.1/4 TNF 38/5.1/4	ETS 38	270 330
5 7/16 *138,113*	**SNL 3038**	22232 CCK/W33 22232-2CS5K C 3232 K	HA 3132 HA 3132 HA 2332 L	2 FRB 17.5/290 2 FRB 17.5/290 2 FRB 5.5/290	TS 38/5.7/16 TNF 38/5.7/16	ETS 38	250 312
	SNL 3140	22332 CCK/W33 22332-2CS5K	HA 2332 HA 2332	2 FRB 9/340 2 FRB 9/340	TS 40/5.7/16 TNF 40/5.7/16	ETS 40	290 347
5 1/2 *139,700*	**SNL 3038**	22232 CCK/W33 22232-2CS5K C 3232 K	HE 3132 HE 3132 HE 2332 L	2 FRB 17.5/290 2 FRB 17.5/290 2 FRB 5.5/290	TS 38/5.1/2 TNF 38/5.1/2	ETS 38	250 312
	SNL 3140	22332 CCK/W33 22332-2CS5K	HE 2332 HE 2332	2 FRB 9/340 2 FRB 9/340	TS 40/5.1/2 TNF 40/5.1/2	ETS 40	290 347

[1] 222(00), 223(00), 230(00), 231(00), 232(00)...– spherical roller bearing, C... – CARB toroidal roller bearing.
Only typical bearings are listed. Other bearing variants can also fit the housing.
[2] The adapter sleeve fits the bearing in the same line only. If an oil lubricated adapter sleeve is wanted, contact SKF for availability.
Only typical adapter sleeves are listed. Other variants can also fit the housing.
[3] The locating rings fit the bearing in the same line only.

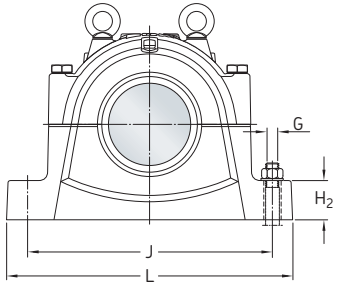

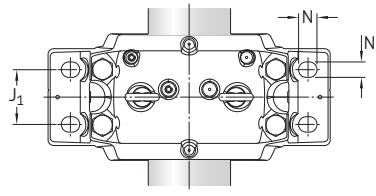

Shaft diameter	**Dimensions**															**Eye bolt** according to DIN 580	**Mass** Housing
d_a	A	A_1	C_a	D_a	H	H_1	H_2	J	J_1	L	N	N_1	s	G	G		
in./*mm*	mm														in.	–	kg
4 7/16 *112,713*	230	180	108	280	333	170	70	430	100	510	34	28	14	24	1	M 16	69,5
4 1/2 *114,300*	230	180	108	280	333	170	70	430	100	510	34	28	14	24	1	M 16	69,5
4 15/16 *125,413*	240	190	116	300	353	180	75	450	110	530	34	28	15	24	1	M 16	77,5
5 *127,000*	240	190	116	300	353	180	75	450	110	530	34	28	15	24	1	M 16	77,5
5 3/16 *131,763*	260	210	124	320	375	190	80	480	120	560	34	28	10	24	1	M 20	97,5
5 1/4 *133,350*	260	210	124	320	375	190	80	480	120	560	34	28	10	24	1	M 20	97,5
5 7/16 *138,113*	240	190	115	290	353	180	75	450	110	530	34	28	15	24	1	M 16	77,5
	280	230	132	340	411	210	85	510	130	610	42	35	10	30	1 1/4	M 20	123
5 1/2 *139,700*	240	190	115	290	353	180	75	450	110	530	34	28	15	24	1	M 16	77,5
	280	230	132	340	411	210	85	510	130	610	42	35	10	30	1 1/4	M 20	123

5.2 Large SNL plummer block housings for bearings on an adapter sleeve, inch shafts

d_a **5 13/16 – 5 15/16** in.
147,638 – 150,813 mm

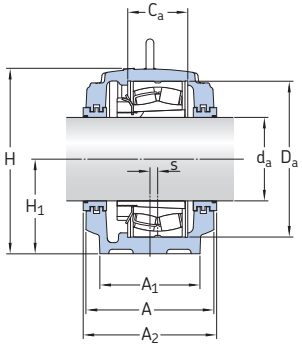

Labyrinth seals, TS design

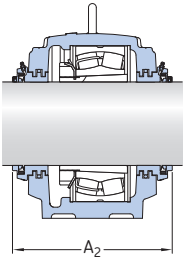

Taconite seals, TNF design

Shaft diameter d_a	Housing	Appropriate parts Bearing[1]	Adapter sleeve[2]	Locating ring[3]	Seals	End cover	Width incl. seals A_2
in./*mm*	–	–					mm
5 13/16 *147,638*	**SNL 3040**	22234 CCK/W33 22234-2CS5K C 2234 K	H 3134/5.13/16 H 3134/5.13/16 H 3134/5.13/16 L	2 FRB 18/310 2 FRB 18/310 2 FRB 18/310	TS 40/5.13/16 TNF 40/5.13/16	ETS 40	270 327
	SNL 3234	23234 CCK/W33	H 2334/5.13/16	2 FRB 6/310	TS 40/5.13/16 TNF 40/5.13/16	ETS 40	270 327
	SNL 3048	22334 CCK/W33	H 2334/5.13/16	2 FRB 10/360	TS 48/5.13/16 TNS 48/5.13/16	ETS 48	300 380
5 7/8 *149,225*	**SNL 3040**	22234 CCK/W33 22234-2CS5K C 2234 K	H 3134/5.7/8 H 3134/5.7/8 H 3134/5.7/8 L	2 FRB 18/310 2 FRB 18/310 2 FRB 18/310	TS 40/5.7/8 TNF 40/5.7/8	ETS 40	270 327
	SNL 3234	23234 CCK/W33	H 2334/5.7/8	2 FRB 6/310	TS 40/5.7/8 TNF 40/5.7/8	ETS 40	270 327
	SNL 3048	22334 CCK/W33	H 2334/5.7/8	2 FRB 10/360	TS 48/5.7/8 TNF 48/5.7/8	ETS 48	300 380
5 15/16 *150,813*	**SNL 3134**	23134 CCK/W33 23134-2CS5K C 3134 K	HA 3134 HA 3134 HA 3134 E	2 FRB 10/280 2 FRB 10/280 2 FRB 10/280	TS 34/5.15/16 TNF 34/5.15/16	ETS 34	240 299
	SNL 3234	23234 CCK/W33	HA 2334	2 FRB 6/310	TS 40/5.15/16 TNF 40/5.15/16	ETS 40	270 327
	SNL 3040	22234 CCK/W33 22234-2CS5K	HA 3134 HA 3134	2 FRB 18/310 2 FRB 18/310	TS 40/5.15/16 TNF 40/5.15/16	ETS 40	270 327
	SNL 3048	22334 CCK/W33	HA 2334	2 FRB 10/360	TS 48/5.15/16 TNF 48/5.15/16	ETS 48	300 380

[1] 222(00), 223(00), 230(00), 231(00), 232(00)...– spherical roller bearing, C... – CARB toroidal roller bearing. Only typical bearings are listed. Other bearing variants can also fit the housing.
[2] The adapter sleeve fits the bearing in the same line only. If an oil lubricated adapter sleeve is wanted, contact SKF for availability. Only typical adapter sleeves are listed. Other variants can also fit the housing.
[3] The locating rings fit the bearing in the same line only.

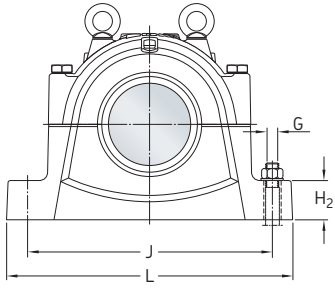

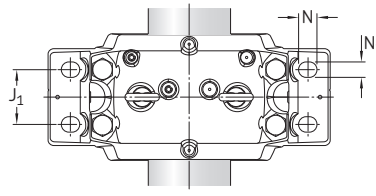

Shaft diameter	**Dimensions**															**Eye bolt** according to DIN 580	**Mass** Housing
d_a	A	A_1	C_a	D_a	H	H_1	H_2	J	J_1	L	N	N_1	s	G	G		
in./*mm*	mm														in.	–	kg
5 13/16 *147,638*	260	210	122	310	375	190	80	480	120	560	34	28	10	24	1	M 20	97,5
	260	210	122	310	375	190	80	480	120	560	34	28	10	24	1	M 20	97,5
	290	240	140	360	434	220	90	540	140	640	42	35	12	30	1 1/4	M 20	139
5 7/8 *149,225*	260	210	122	310	375	190	80	480	120	560	34	28	10	24	1	M 20	97,5
	260	210	122	310	375	190	80	480	120	560	34	28	10	24	1	M 20	97,5
	290	240	140	360	434	220	90	540	140	640	42	35	12	30	1 1/4	M 20	139
5 15/16 *150,813*	230	180	108	280	333	170	70	430	100	510	34	28	14	24	1	M 16	69,5
	260	210	122	310	375	190	80	480	120	560	34	28	10	24	1	M 20	97,5
	260	210	122	310	375	190	80	480	120	560	34	28	10	24	1	M 20	97,5
	290	240	140	360	434	220	90	540	140	640	42	35	12	30	1 1/4	M 20	139

5.2 Large SNL plummer block housings for bearings on an adapter sleeve, inch shafts

d_a **6 – 6 3/8** in.
152,4 – 161,925 mm

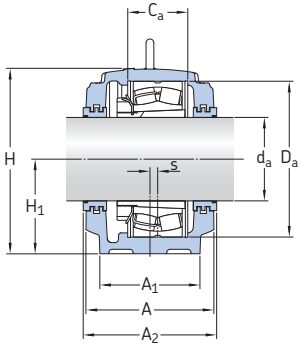

Labyrinth seals,
TS design

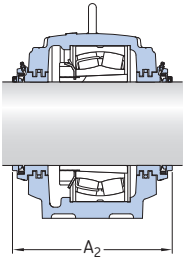

Taconite seals,
TNF design

Shaft diameter d_a	Housing	Appropriate parts Bearing[1]	Adapter sleeve[2]	Locating ring[3]	Seals	End cover	Width incl. seals A_2
in./*mm*	–	–					mm
6 *152,4*	**SNL 3134**	23134 CCK/W33 23134-2CS5K	HE 3134 HE 3134	2 FRB 10/280 2 FRB 10/280	TS 34/6 TNF 34/6	ETS 34	240 299
	SNL 3234	23234 CCK/W33	HE 2334	2 FRB 6/310	TS 40/6 TNF 40/6	ETS 40	270 327
	SNL 3040	22234 CCK/W33 22234-2CS5K	HE 3134 HE 3134	2 FRB 18/310 2 FRB 18/310	TS 40/6 TNF 40/6	ETS 40	270 327
	SNL 3048	22334 CCK/W33	HE 2334	2 FRB 10/360	TS 48/6 TNF 48/6	ETS 48	300 380
6 5/16 *160,338*	**SNL 3036**	23036 CCK/W33 23036-2CS5K C 3036 K	H 3036/6.5/16 H 3036/6.5/16 E H 3036/6.5/16	2 FRB 17/280 2 FRB 17/280 2 FRB 17/280	TS 36/6.5/16 TNF 36/6.5/16	ETS 36	240 300
	SNL 3138	22236 CCK/W33 22236-2CS5K	H 3136/6.5/16 H 3136/6.5/16	2 FRB 19/320 2 FRB 19/320	TS 38/6.5/16 TNF 38/6.5/16	ETS 38	270 330
6 3/8 *161,925*	**SNL 3036**	23036 CCK/W33 23036-2CS5K C 3036 K	H 3036/6.3/8 H 3036/6.3/8 E H 3036/6.3/8	2 FRB 17/280 2 FRB 17/280 2 FRB 17/280	TS 36/6.3/8 TNF 36/6.3/8	ETS 36	240 300
	SNL 3138	22236 CCK/W33 22236-2CS5K	H 3136/6.3/8 H 3136/6.3/8	2 FRB 19/320 2 FRB 19/320	TS 38/6.3/8 TNF 38/6.3/8	ETS 38	270 330

1) 222(00), 223(00), 230(00), 231(00), 232(00)... – spherical roller bearing, C... – CARB toroidal roller bearing.
Only typical bearings are listed. Other bearing variants can also fit the housing.
2) The adapter sleeve fits the bearing in the same line only. If an oil lubricated adapter sleeve is wanted, contact SKF for availability.
Only typical adapter sleeves are listed. Other variants can also fit the housing.
3) The locating rings fit the bearing in the same line only.

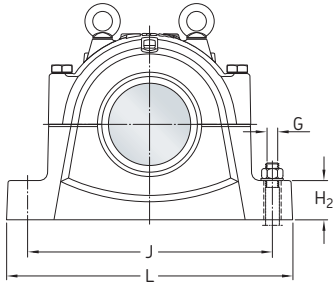

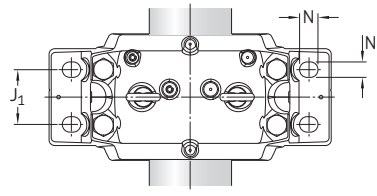

Shaft diameter	**Dimensions**															**Eye bolt** according to DIN 580	**Mass** Housing
d_a	A	A_1	C_a	D_a	H	H_1	H_2	J	J_1	L	N	N_1	s	G	G		
in./*mm*	mm														in.	–	kg
6 *152,4*	230	180	108	280	333	170	70	430	100	510	34	28	14	24	1	M 16	69,5
	260	210	122	310	375	190	80	480	120	560	34	28	10	24	1	M 20	97,5
	260	210	122	310	375	190	80	480	120	560	34	28	10	24	1	M 20	97,5
	290	240	140	360	434	220	90	540	140	640	42	35	12	30	1 1/4	M 20	139
6 5/16 *160,338*	230	180	108	280	333	170	70	430	100	510	34	28	14	24	1	M 16	69,5
	260	210	124	320	375	190	80	480	120	560	34	28	10	24	1	M 20	97,5
6 3/8 *161,925*	230	180	108	280	333	170	70	430	100	510	34	28	14	24	1	M 16	69,5
	260	210	124	320	375	190	80	480	120	560	34	28	10	24	1	M 20	97,5

5.2 Large SNL plummer block housings for bearings on an adapter sleeve, inch shafts

d_a **6 7/16 – 6 1/2** in.
163,513 – 165,1 mm

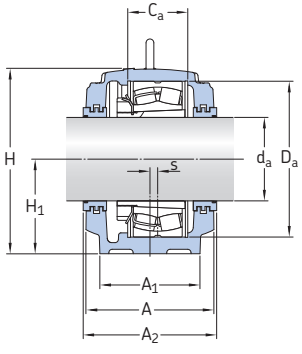

Labyrinth seals, TS design

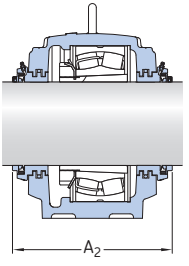

Taconite seals, TNF design

Shaft diameter d_a	**Housing**	**Appropriate parts** Bearing[1]	Adapter sleeve[2]	Locating ring[3]	Seals	End cover	Width incl. seals A_2
in./*mm*	–	–					mm
6 7/16 *163,513*	**SNL 3036**	23036 CCK/W33 23036-2CS5K C 3036 K	HA 3036 HA 3036 E HA 3036	2 FRB 17/280 2 FRB 17/280 2 FRB 17/280	TS 36/6.7/16 TNF 36/6.7/16	ETS 36	240 300
	SNL 3136	23136 CCK/W33 23136-2CS5K C 3136 K	HA 3136 HA 3136 L HA 3136 L	2 FRB 10/300 2 FRB 10/300 2 FRB 10/300	TS 36/6.7/16 TNF 36/6.7/16	ETS 36	250 310
	SNL 3236	23236 CCK/W33 C 3236 K	HA 2336 HA 2336	2 FRB 6/320 2 FRB 6/320	TS 38/6.7/16 TNF 38/6.7/16	ETS 38	270 330
	SNL 3138	22236 CCK/W33 22236-2CS5K	HA 3136 HA 3136	2 FRB 19/320 2 FRB 19/320	TS 38/6.7/16 TNF 38/6.7/16	ETS 38	270 330
6 1/2 *165,1*	**SNL 3036**	23036 CCK/W33 23036-2CS5K C 3036 K	HE 3036 HE 3036 E HE 3036	2 FRB 17/280 2 FRB 17/280 2 FRB 17/280	TS 36/6.1/2 TNF 36/6.1/2	ETS 36	240 300
	SNL 3136	23136 CCK/W33 23136-2CS5K C 3136 K	HE 3136 HE 3136 L HE 3136 L	2 FRB 10/300 2 FRB 10/300 2 FRB 10/300	TS 36/6.1/2 TNF 36/6.1/2	ETS 36	250 310
	SNL 3138	22236 CCK/W33 22236-2CS5K	HE 3136 HE 3136	2 FRB 19/320 2 FRB 19/320	TS 38/6.1/2 TNF 38/6.1/2	ETS 38	270 330
	SNL 3236	23236 CCK/W33 C 3236 K	HE 2336 HE 2336	2 FRB 6/320 2 FRB 6/320	TS 38/6.1/2 TNF 38/6.1/2	ETS 38	270 330

[1] 222(00), 223(00), 230(00), 231(00), 232(00)...– spherical roller bearing, C... – CARB toroidal roller bearing. Only typical bearings are listed. Other bearing variants can also fit the housing.
[2] The adapter sleeve fits the bearing in the same line only. If an oil lubricated adapter sleeve is wanted, contact SKF for availability. Only typical adapter sleeves are listed. Other variants can also fit the housing.
[3] The locating rings fit the bearing in the same line only.

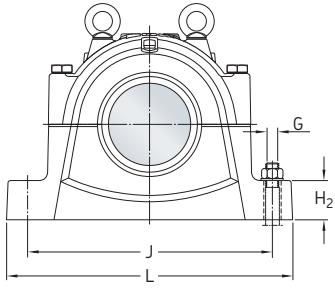

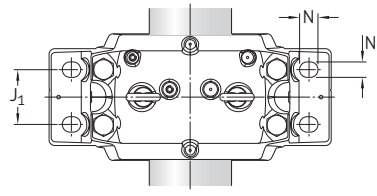

Shaft diameter	**Dimensions**															**Eye bolt** according to DIN 580	**Mass** Housing
d_a	A	A_1	C_a	D_a	H	H_1	H_2	J	J_1	L	N	N_1	s	G	G		
in./*mm*	mm														in.	–	kg
6 7/16 *163,513*	230	180	108	280	333	170	70	430	100	510	34	28	14	24	1	M 16	69,5
	240	190	116	300	353	180	75	450	110	530	34	28	15	24	1	M 16	77,5
	260	210	124	320	375	190	80	480	120	560	34	28	10	24	1	M 20	97,5
	260	210	124	320	375	190	80	480	120	560	34	28	10	24	1	M 20	97,5
6 1/2 *165,1*	230	180	108	280	333	170	70	430	100	510	34	28	14	24	1	M 16	69,5
	240	190	116	300	353	180	75	450	110	530	34	28	15	24	1	M 16	77,5
	260	210	124	320	375	190	80	480	120	560	34	28	10	24	1	M 20	97,5
	260	210	124	320	375	190	80	480	120	560	34	28	10	24	1	M 20	97,5

5.2 Large SNL plummer block housings for bearings on an adapter sleeve, inch shafts

d_a **6 3/4 – 6 13/16** in.
171,45 – 173,038 mm

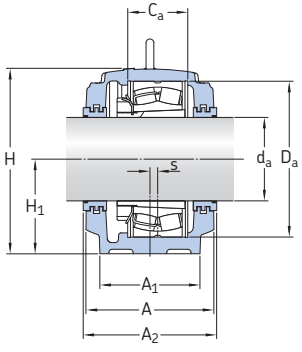

Labyrinth seals, TS design

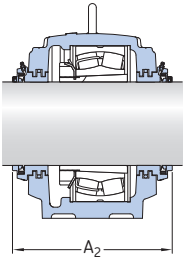

Taconite seals, TNF design

Shaft diameter d_a	**Housing**	**Appropriate parts** Bearing[1]	Adapter sleeve[2]	Locating ring[3]	Seals	End cover	Width incl. seals A_2
in./*mm*	–	–					mm
6 3/4 *171,45*	**SNL 3038**	23038 CCK/W33 C 3038 K	HE 3038 HE 3038	4 FRB 10/290 4 FRB 10/290	TS 38/6.3/4 TNF 38/6.3/4	ETS 38	250 312
	SNL 3138	23138 CCK/W33 23138-2CS5K C 3138 KV	HE 3138 HE 3138 L HE 3138	2 FRB 10/320 2 FRB 10/320 2 FRB 10/320	TS 38/6.3/4 TNF 38/6.3/4	ETS 38	270 330
	SNL 3140	22238 CCK/W33 22238-2CS5K C 2238 K	HE 3138 HE 3138 HE 3138	4 FRB 10/340 4 FRB 10/340 4 FRB 10/340	TS 40/6.3/4 TNF 40/6.3/4	ETS 40	290 347
	SNL 3238	23238 CCK/W33	HE 2338	2 FRB 6/340	TS 40/6.3/4 TNF 40/6.3/4	ETS 40	290 347
	SNL 3148	22338 CCK/W33	HE 2338	2 FRB 8/400	TS 48/6.3/4 TNF 48/6.3/4	ETS 48	315 396
6 13/16 *173,038*	**SNL 3038**	23038 CCK/W33 C 3038 K	H 3038/6.13/16 H 3038/6.13/16	4 FRB 10/290 4 FRB 10/290	TS 38/6.13/16 TNF 38/6.13/16	ETS 38	250 312
	SNL 3140	22238 CCK/W33 22238-2CS5K C 2238 K	H 3138/6.13/16 H 3138/6.13/16 H 3138/6.13/16	4 FRB 10/340 4 FRB 10/340 4 FRB 10/340	TS 40/6.13/16 TNF 40/6.13/16	ETS 40	290 347
	SNL 3238	23238 CCK/W33	H 2338/6.13/16	2 FRB 6/340	TS 40/6.13/16 TNF 40/6.13/16	ETS 40	290 347
	SNL 3148	22338 CCK/W33	H 2338/6.13/16	2 FRB 8/400	TS 48/6.13/16 TNF 48/6.13/16	ETS 48	315 396

[1] 222(00), 223(00), 230(00), 231(00), 232(00)... – spherical roller bearing, C... – CARB toroidal roller bearing. Only typical bearings are listed. Other bearing variants can also fit the housing.
[2] The adapter sleeve fits the bearing in the same line only. If an oil lubricated adapter sleeve is wanted, contact SKF for availability. Only typical adapter sleeves are listed. Other variants can also fit the housing.
[3] The locating rings fit the bearing in the same line only.

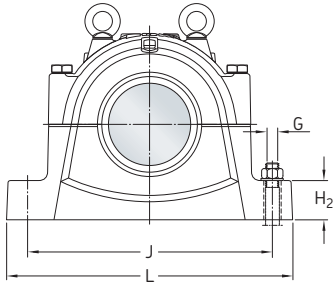

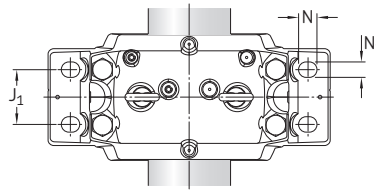

Shaft diameter	**Dimensions**															**Eye bolt** according to DIN 580	**Mass** Housing
d_a	A	A_1	C_a	D_a	H	H_1	H_2	J	J_1	L	N	N_1	s	G	G		
in./*mm*	mm														in.	–	kg
6 3/4 *171,45*	240	190	115	290	353	180	75	450	110	530	34	28	15	24	1	M 16	77,5
	260	210	124	320	375	190	80	480	120	560	34	28	10	24	1	M 20	97,5
	280	230	132	340	411	210	85	510	130	610	42	35	10	30	1 1/4	M 20	123
	280	230	132	340	411	210	85	510	130	610	42	35	10	30	1 1/4	M 20	123
	310	260	148	400	474	240	95	600	150	700	42	35	12	30	1 1/4	M 24	187
6 13/16 *173,038*	240	190	115	290	353	180	75	450	110	530	34	28	15	24	1	M 16	77,5
	280	230	132	340	411	210	85	510	130	610	42	35	10	30	1 1/4	M 20	123
	280	230	132	340	411	210	85	510	130	610	42	35	10	30	1 1/4	M 20	123
	310	260	148	400	474	240	95	600	150	700	42	35	12	30	1 1/4	M 24	187

5.2 Large SNL plummer block housings for bearings on an adapter sleeve, inch shafts

d_a **6 7/8 – 6 15/16** in.
174,625 – 176,213 mm

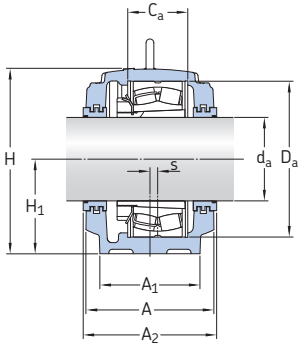

Labyrinth seals,
TS design

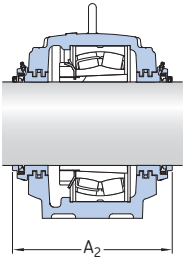

Taconite seals,
TNF design

Shaft diameter d_a	**Housing**	**Appropriate parts** Bearing[1]	Adapter sleeve[2]	Locating ring[3]	Seals	End cover	Width incl. seals A_2
in./*mm*	–	–					mm
6 7/8 *174,625*	**SNL 3038**	23038 CCK/W33 C 3038 K	H 3038/6.7/8 H 3038/6.7/8	4 FRB 10/290 4 FRB 10/290	TS 38/6.7/8 TNF 38/6.7/8	ETS 38	250 312
	SNL 3140	22238 CCK/W33 22238-2CS5K C 2238 K	H 3138/6.7/8 H 3138/6.7/8 H 3138/6.7/8	4 FRB 10/340 4 FRB 10/340 4 FRB 10/340	TS 40/6.7/8 TNF 40/6.7/8	ETS 40	290 347
	SNL 3238	23238 CCK/W33	H 2338/6.7/8	2 FRB 6/340	TS 40/6.7/8 TNF 40/6.7/8	ETS 40	290 347
	SNL 3148	22338 CCK/W33	H 2338/6.7/8	2 FRB 8/400	TS 48/6.7/8 TNF 48/6.7/8	ETS 48	315 396
6 15/16 *176,213*	**SNL 3038**	23038 CCK/W33 C 3038 K	HA 3038 HA 3038	4 FRB 10/290 4 FRB 10/290	TS 38/6.15/16 TNF 38/6.15/16	ETS 38	250 312
	SNL 3138	23138 CCK/W33 23138-2CS5K C 3138 KV	HA 3138 HA 3138 L HA 3138	2 FRB 10/320 2 FRB 10/320 2 FRB 10/320	TS 38/6.15/16 TNF 38/6.15/16	ETS 38	270 330
	SNL 3238	23238 CCK/W33	HA 2338	2 FRB 6/340	TS 40/6.15/16 TNF 40/6.15/16	ETS 40	290 347
	SNL 3140	22238 CCK/W33 22238-2CS5K C 2238 K	HA 3138 HA 3138 HA 3138	4 FRB 10/340 4 FRB 10/340 4 FRB 10/340	TS 40/6.15/16 TNF 40/6.15/16	ETS 40	290 347
	SNL 3148	22338 CCK/W33	HA 2338	2 FRB 8/400	TS 48/6.15/16 TNF 48/6.15/16	ETS 48	315 396

[1] 222(00), 223(00), 230(00), 231(00), 232(00)...– spherical roller bearing, C... – CARB toroidal roller bearing.
Only typical bearings are listed. Other bearing variants can also fit the housing.
[2] The adapter sleeve fits the bearing in the same line only. If an oil lubricated adapter sleeve is wanted, contact SKF for availability.
Only typical adapter sleeves are listed. Other variants can also fit the housing.
[3] The locating rings fit the bearing in the same line only.

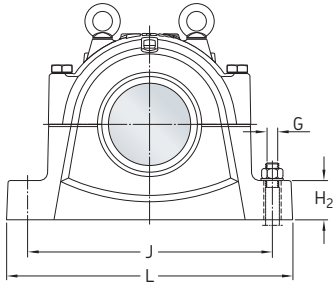

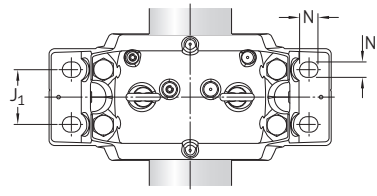

Shaft diameter	**Dimensions**															**Eye bolt** according to DIN 580	**Mass** Housing
d_a	A	A_1	C_a	D_a	H	H_1	H_2	J	J_1	L	N	N_1	s	G	G		
in./*mm*	mm														in.	–	kg
6 7/8 *174,625*	240	190	115	290	353	180	75	450	110	530	34	28	15	24	1	M 16	77,5
	280	230	132	340	411	210	85	510	130	610	42	35	10	30	1 1/4	M 20	123
	280	230	132	340	411	210	85	510	130	610	42	35	10	30	1 1/4	M 20	123
	310	260	148	400	474	240	95	600	150	700	42	35	12	30	1 1/4	M 24	187
6 15/16 *176,213*	240	190	115	290	353	180	75	450	110	530	34	28	15	24	1	M 16	77,5
	260	210	124	320	375	190	80	480	120	560	34	28	10	24	1	M 20	97,5
	280	230	132	340	411	210	85	510	130	610	42	35	10	30	1 1/4	M 20	123
	280	230	132	340	411	210	85	510	130	610	42	35	10	30	1 1/4	M 20	123
	310	260	148	400	474	240	95	600	150	700	42	35	12	30	1 1/4	M 24	187

5.2 Large SNL plummer block housings for bearings on an adapter sleeve, inch shafts

d_a **7** in.
177,8 mm

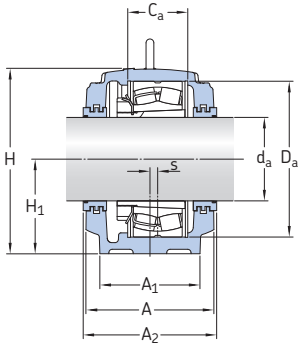

Labyrinth seals,
TS design

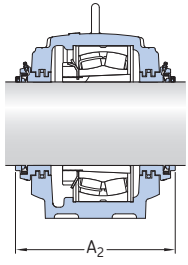

Taconite seals,
TNF design

Shaft diameter d_a	Housing	Appropriate parts Bearing[1]	Adapter sleeve[2]	Locating ring[3]	Seals	End cover	Width incl. seals A_2
in./*mm*	–	–					mm
7 *177,8*	**SNL 3038**	23038 CCK/W33 C 3038 K	H 3038/7 H 3038/7	4 FRB 10/290 4 FRB 10/290	TS 38/7 TNF 38/7	ETS 38	250 312
	SNL 3140	22238 CCK/W33 22238-2CS5K C 2238 K	H 3138/7 H 3138/7 H 3138/7	4 FRB 10/340 4 FRB 10/340 4 FRB 10/340	TS 40/7 TNF 40/7	ETS 40	290 347
	SNL 3238	23238 CCK/W33	H 2338/7	2 FRB 6/340	TS 40/7 TNF 40/7	ETS 40	290 347
	SNL 3148	22338 CCK/W33	H 2338/7	2 FRB 8/400	TS 48/7 TNF 48/7	ETS 48	315 396
	SNL 3040	23040 CCK/W33 23040-2CS5K C 3040 K	HE 3040 HE 3040 HE 3040	4 FRB 10/310 4 FRB 10/310 4 FRB 10/310	TS 40/7 TNF 40/7	ETS 40	270 327
	SNL 3140	23140 CCK/W33 23140-2CS5K C 3140 K	HE 3140 HE 3140 HE 3140	2 FRB 10/340 2 FRB 10/340 2 FRB 10/340	TS 40/7 TNF 40/7	ETS 40	290 347
	SNL 3048	22240 CCK/W33 22240-2CS5K	HE 3140 HE 3140	2 FRB 21/360 2 FRB 21/360	TS 48/7 TNF 48/7	ETS 48	300 380
	SNL 3240	23240 CCK/W33	HE 2340	2 FRB 6/360	TS 48/7 TNF 48/7	ETS 48	300 380
	SNL 3056	22340 CCK/W33	HE 2340	2 FRB 14/420	TS 56/7 TNF 56/7	ETS 56	330 404

[1] 222(00), 223(00), 230(00), 231(00), 232(00)...– spherical roller bearing, C... – CARB toroidal roller bearing.
Only typical bearings are listed. Other bearing variants can also fit the housing.
[2] The adapter sleeve fits the bearing in the same line only. If an oil lubricated adapter sleeve is wanted, contact SKF for availability.
Only typical adapter sleeves are listed. Other variants can also fit the housing.
[3] The locating rings fit the bearing in the same line only.

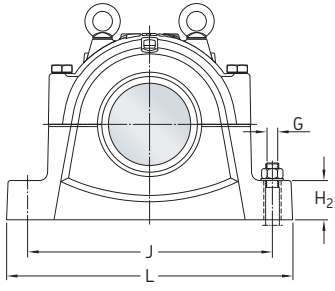

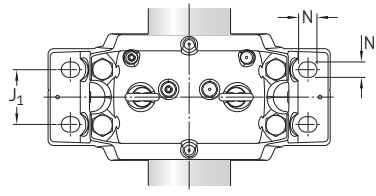

Shaft diameter	**Dimensions**															**Eye bolt** according to DIN 580	**Mass** Housing
d_a	A	A_1	C_a	D_a	H	H_1	H_2	J	J_1	L	N	N_1	s	G	G		
in./*mm*	mm														in.	–	kg
7 *177,8*	240	190	115	290	353	180	75	450	110	530	34	28	15	24	1	M 16	77,5
	280	230	132	340	411	210	85	510	130	610	42	35	10	30	1 1/4	M 20	123
	280	230	132	340	411	210	85	510	130	610	42	35	10	30	1 1/4	M 20	123
	310	260	148	400	474	240	95	600	150	700	42	35	12	30	1 1/4	M 24	187
	260	210	122	310	375	190	80	480	120	560	34	28	10	24	1	M 20	97,5
	280	230	132	340	411	210	85	510	130	610	42	35	10	30	1 1/4	M 20	123
	290	240	140	360	434	220	90	540	140	640	42	35	12	30	1 1/4	M 20	139
	290	240	140	360	434	220	90	540	140	640	42	35	12	30	1 1/4	M 20	139
	320	280	166	420	516	260	100	650	160	770	50	42	13	36	1 1/2	M 24	221

5.2 Large SNL plummer block housings for bearings on an adapter sleeve, inch shafts

d_a **7 1/8 – 7 3/16** in.
180,975 – 182,563 mm

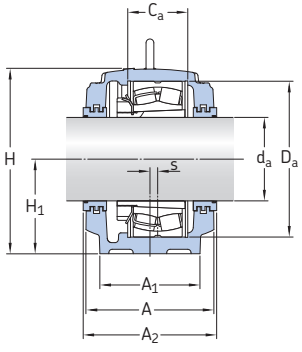

Labyrinth seals,
TS design

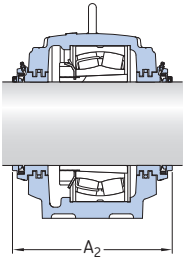

Taconite seals,
TNF design

Shaft diameter d_a	**Housing**	**Appropriate parts** Bearing[1]	Adapter sleeve[2]	Locating ring[3]	Seals	End cover	Width incl. seals A_2
in./*mm*	–	–					mm
7 1/8 *180,975*	**SNL 3040**	23040 CCK/W33 23040-2CS5K C 3040 K	H 3040/7.1/8 H 3040/7.1/8 H 3040/7.1/8	4 FRB 10/310 4 FRB 10/310 4 FRB 10/310	TS 40/7.1/8 TNF 40/7.1/8	ETS 40	270 327
	SNL 3048	22240 CCK/W33 22240-2CS5K	H 3140/7.1/8 H 3140/7.1/8	2 FRB 21/360 2 FRB 21/360	TS 48/7.1/8 TNF 48/7.1/8	ETS 48	300 380
	SNL 3240	23240 CCK/W33	H 2340/7.1/8	2 FRB 6/360	TS 48/7.1/8 TNF 48/7.1/8	ETS 48	300 380
	SNL 3056	22340 CCK/W33	H 2340/7.1/8	2 FRB 14/420	TS 56/7.1/8 TNF 56/7.1/8	ETS 56	330 404
7 3/16 *182,563*	**SNL 3040**	23040 CCK/W33 23040-2CS5K C 3040 K	HA 3040 HA 3040 HA 3040	4 FRB 10/310 4 FRB 10/310 4 FRB 10/310	TS 40/7.3/16 TNF 40/7.3/16	ETS 40	270 327
	SNL 3140	23140 CCK/W33 23140-2CS5K C 3140 K	HA 3140 HA 3140 HA 3140	2 FRB 10/340 2 FRB 10/340 2 FRB 10/340	TS 40/7.3/16 TNF 40/7.3/16	ETS 40	290 347
	SNL 3240	23240 CCK/W33	HA 2340	2 FRB 6/360	TS 48/7.3/16 TNF 48/7.3/16	ETS 48	300 380
	SNL 3048	22240 CCK/W33 22240-2CS5K	HA 3140 HA 3140	2 FRB 21/360 2 FRB 21/360	TS 48/7.3/16 TNF 48/7.3/16	ETS 48	300 380
	SNL 3056	22340 CCK/W33	HA 2340	2 FRB 14/420	TS 56/7.13/16 TNF 56/7.13/16	ETS 56	330 404

[1] 222(00), 223(00), 230(00), 231(00), 232(00)...– spherical roller bearing, C... – CARB toroidal roller bearing.
Only typical bearings are listed. Other bearing variants can also fit the housing.
[2] The adapter sleeve fits the bearing in the same line only. If an oil lubricated adapter sleeve is wanted, contact SKF for availability.
Only typical adapter sleeves are listed. Other variants can also fit the housing.
[3] The locating rings fit the bearing in the same line only.

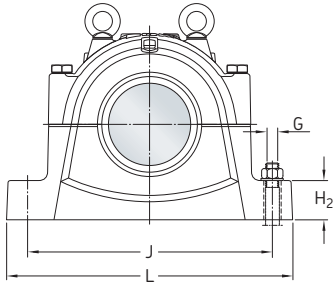

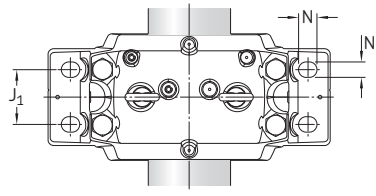

Shaft diameter	**Dimensions**														**Eye bolt** according to DIN 580	**Mass** Housing
d_a	A	A_1	C_a	D_a	H	H_1	H_2	J	J_1	L	N	N_1	s	G	G	
in./*mm*	mm														in.	–	kg
7 1/8 *180,975*	260	210	122	310	375	190	80	480	120	560	34	28	10	24	1	M 20	97,5
	290	240	140	360	434	220	90	540	140	640	42	35	12	30	1 1/4	M 20	139
	290	240	140	360	434	220	90	540	140	640	42	35	12	30	1 1/4	M 20	139
	320	280	166	420	516	260	100	650	160	770	50	42	13	36	1 1/2	M 24	221
7 3/16 *182,563*	260	210	122	310	375	190	80	480	120	560	34	28	10	24	1	M 20	97,5
	280	230	132	340	411	210	85	510	130	610	42	35	10	30	1 1/4	M 20	123
	290	240	140	360	434	220	90	540	140	640	42	35	12	30	1 1/4	M 20	139
	290	240	140	360	434	220	90	540	140	640	42	35	12	30	1 1/4	M 20	139
	320	280	166	420	516	260	100	650	160	770	50	42	13	36	1 1/2	M 24	221

5.2 Large SNL plummer block housings for bearings on an adapter sleeve, inch shafts

d_a **7 1/4 – 7 7/8** in.
184,15 – 200,025 mm

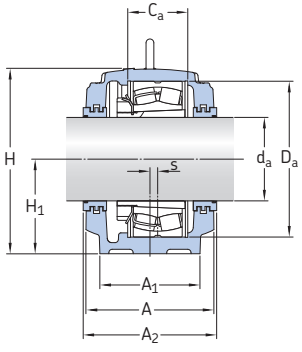

Labyrinth seals,
TS design

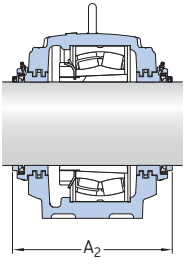

Taconite seals,
TNF design

Shaft diameter d_a	Housing	Appropriate parts Bearing[1]	Adapter sleeve[2]	Locating ring[3]	Seals	End cover	Width incl. seals A_2
in./*mm*	–	–					mm
7 1/4 *184,15*	**SNL 3040**	23040 CCK/W33 23040-2CS5K C 3040 K	H 3040/7.1/4 H 3040/7.1/4 H 3040/7.1/4	4 FRB 10/310 4 FRB 10/310 4 FRB 10/310	TS 40/7.1/4 TNF 40/7.1/4	ETS 40	270 327
	SNL 3048	22240 CCK/W33 22240-2CS5K	H 3140/7.1/4 H 3140/7.1/4	2 FRB 21/360 2 FRB 21/360	TS 48/7.1/4 TNF 48/7.1/4	ETS 48	300 380
	SNL 3240	23240 CCK/W33	H 2340/7.1/4	2 FRB 6/360	TS 48/7.1/4 TNF 48/7.1/4	ETS 48	300 380
	SNL 3056	22340 CCK/W33	H 2340/7.1/4	2 FRB 14/420	TS 56/7.1/4 TNF 56/7.1/4	ETS 56	330 404
7 13/16 *198,438*	**SNL 3044**	23044 CCK/W33 23044-2CS5K C 3044 K	OH 3044/7.13/16 H OH 3044/7.13/16 H OH 3044/7.13/16 H	4 FRB 10/340 4 FRB 10/340 4 FRB 10/340	TS 44/7.13/16 TNF 44/7.13/16	ETS 44	290 349
	SNL 3148	22244 CCK/W33	OH 3144/7.13/16 H	4 FRB 10/400	TS 48/7.13/16 TNF 48/7.13/16	ETS 48	315 396
7 7/8 *200,025*	**SNL 3044**	23044 CCK/W33 23044-2CS5K C 3044 K	OH 3044/7.7/8 H OH 3044/7.7/8 H OH 3044/7.7/8 H	4 FRB 10/340 4 FRB 10/340 4 FRB 10/340	TS 44/7.7/8 TNF 44/7.7/8	ETS 44	290 349
	SNL 3148	22244 CCK/W33	OH 3144/7.7/8 H	4 FRB 10/400	TS 48/7.7/8 TNF 48/7.7/8	ETS 48	315 396

[1] 222(00), 223(00), 230(00), 231(00), 232(00)...– spherical roller bearing, C... – CARB toroidal roller bearing.
Only typical bearings are listed. Other bearing variants can also fit the housing.
[2] The adapter sleeve fits the bearing in the same line only. If an oil lubricated adapter sleeve is wanted, contact SKF for availability.
Only typical adapter sleeves are listed. Other variants can also fit the housing.
[3] The locating rings fit the bearing in the same line only.

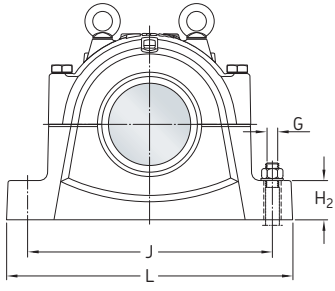

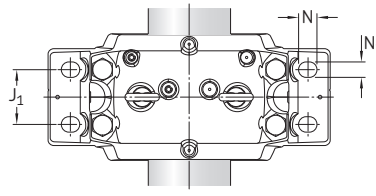

Shaft diameter	**Dimensions**															**Eye bolt** according to DIN 580	**Mass** Housing
d_a	A	A_1	C_a	D_a	H	H_1	H_2	J	J_1	L	N	N_1	s	G	G		
in./*mm*	mm														in.	–	kg
7 1/4 *184,15*	260	210	122	310	375	190	80	480	120	560	34	28	10	24	1	M 20	97,5
	290	240	140	360	434	220	90	540	140	640	42	35	12	30	1 1/4	M 20	139
	290	240	140	360	434	220	90	540	140	640	42	35	12	30	1 1/4	M 20	139
	320	280	166	420	516	260	100	650	160	770	50	42	13	36	1 1/2	M 24	221
7 13/16 *198,438*	280	230	130	340	411	210	85	510	130	610	42	35	10	30	1 1/4	M 20	123
	310	260	148	400	474	240	95	600	150	700	42	35	12	30	1 1/4	M 24	187
7 7/8 *200,025*	280	230	130	340	411	210	85	510	130	610	42	35	10	30	1 1/4	M 20	123
	310	260	148	400	474	240	95	600	150	700	42	35	12	30	1 1/4	M 24	187

5.2 Large SNL plummer block housings for bearings on an adapter sleeve, inch shafts

d_a **7 15/16 – 8 7/16** in.
201,613 – 214,312 mm

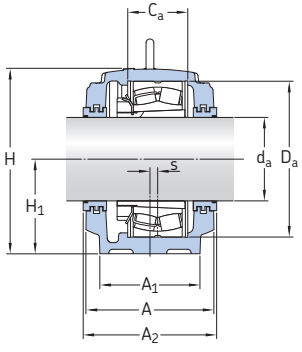

Labyrinth seals, TS design

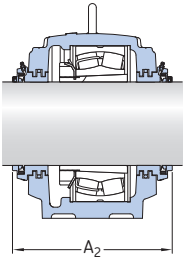

Taconite seals, TNF design

Shaft diameter d_a	**Housing**	**Appropriate parts** Bearing[1]	Adapter sleeve[2]	Locating ring[3]	Seals	End cover	Width incl. seals A_2
in./*mm*	–	–					mm
7 15/16 *201,613*	**SNL 3044**	23044 CCK/W33 23044-2CS5K C 3044 K	H 3044/7.15/16 H 3044/7.15/16 H 3044/7.15/16	4 FRB 10/340 4 FRB 10/340 4 FRB 10/340	TS 44/7.15/16 TNF 44/7.15/16	ETS 44	290 349
	SNL 3144	23144 CCK/W33 23144-2CS5K C 3144 K	H 3144/7.15/16 H 3144/7.15/16 TL H 3144/7.15/16 TL	2 FRB 10/370 2 FRB 10/370 2 FRB 10/370	TS 44/7.15/16 TNF 44/7.15/16	ETS 44	300 357
	SNL 3148	22244 CCK/W33 22244-2CS5K C 2244 K	H 3144/7.15/16 H 3144/7.15/16 H 3144/7.15/16	4 FRB 10/400 4 FRB 10/400 4 FRB 10/400	TS 48/7.15/16 TNF 48/7.15/16	ETS 48	315 396
	SNL 3244	23244 CCK/W33	H 2344/7.15/16	2 FRB 10/400	TS 48/7.15/16 TNF 48/7.15/16	ETS 48	315 396
	SNL 3156	22344 CCK/W33	H 2344/7.15/16	2 FRB 10.5/460	TS 56/7.15/16 TNF 56/7.15/16	ETS 56	330 404
8 *203,2*	**SNL 3044**	23044 CCK/W33 23044-2CS5K C 3044 K	H 3044/8 H 3044/8 H 3044/8	4 FRB 10/340 4 FRB 10/340 4 FRB 10/340	TS 44/8 TNF 44/8	ETS 44	290 349
	SNL 3148	22244 CCK/W33 22244-2CS5K C 2244 K	H 3144/8 H 3144/8 H 3144/8	4 FRB 10/400 4 FRB 10/400 4 FRB 10/400	TS 48/8 TNF 48/8	ETS 48	315 396
8 7/16 *214,312*	**SNL 3048**	23048 CCK/W33 23048-2CS5K C 3048 K	OH 3048/8.7/16 H OH 3048/8.7/16 HE OH 3048/8.7/16 H	4 FRB 12/360 4 FRB 12/360 4 FRB 12/360	TS 48/8.7/16 TNF 48/8.7/16	ETS 48	300 380
	SNL 3152	22248 CCK/W33	OH 3148/8.7/16	2 FRB 22/440	TS 52/8.7/16 TNF 52/8.7/16	ETS 52	330 412

[1] 222(00), 223(00), 230(00), 231(00), 232(00)...– spherical roller bearing, C... – CARB toroidal roller bearing. Only typical bearings are listed. Other bearing variants can also fit the housing.
[2] The adapter sleeve fits the bearing in the same line only. If an oil lubricated adapter sleeve is wanted, contact SKF for availability. Only typical adapter sleeves are listed. Other variants can also fit the housing.
[3] The locating rings fit the bearing in the same line only.

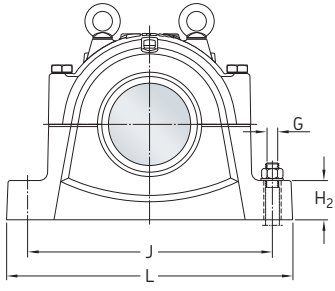

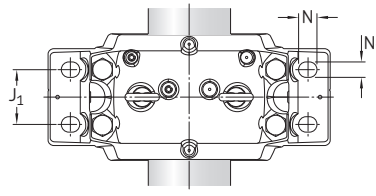

Shaft diameter	Dimensions														Eye bolt according to DIN 580	Mass Housing
d_a	A	A_1	C_a	D_a	H	H_1	H_2	J	J_1	L	N	N_1	s	G	G	
in./*mm*	mm														in.	–	kg
7 15/16 *201,613*	280	230	130	340	411	210	85	510	130	610	42	35	10	30	1 1/4	M 20	123
	290	240	140	370	434	220	90	540	140	640	42	35	12	30	1 1/4	M 20	138
	310	260	148	400	474	240	95	600	150	700	42	35	12	30	1 1/4	M 24	187
	310	260	164	400	474	240	95	600	150	700	42	25	12	30	1 1/4	M 24	187
	320	280	166	460	550	280	105	670	160	790	50	42	16	36	1 1/2	M 24	252
8 *203,2*	280	230	130	340	411	210	85	510	130	610	42	35	10	30	1 1/4	M 20	123
	310	260	148	400	474	240	95	600	150	700	42	35	12	30	1 1/4	M 24	187
8 7/16 *214,312*	290	240	140	360	434	220	90	540	140	640	42	35	12	30	1 1/4	M 20	139
	320	280	164	440	516	260	100	650	160	770	50	42	13	36	1 1/2	M 24	221

5.2 Large SNL plummer block housings for bearings on an adapter sleeve, inch shafts

d_a **8 1/2 – 9 7/16** in.
215,9 – 239,713 mm

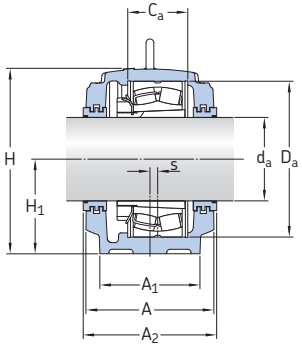

Labyrinth seals, TS design

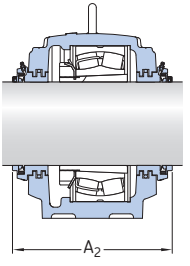

Taconite seals, TNF design

Shaft diameter d_a	Housing	Appropriate parts Bearing[1]	Adapter sleeve[2]	Locating ring[3]	Seals	End cover	Width incl. seals A_2
in./*mm*	–	–					mm
8 1/2 *215,9*	**SNL 3048**	23048 CCK/W33 23048-2CS5K C 3048 K	OH 3048/8.1/2 H OH 3048/8.1/2 HE OH 3048/8.1/2 H	4 FRB 12/360 4 FRB 12/360 4 FRB 12/360	TS 48/8.1/2 TNF 48/8.1/2	ETS 48	300 380
	SNL 3152	22248 CCK/W33	OH 3148/8.1/2 H	2 FRB 22/440	TS 52/8.1/2 TNF 52/8.1/2	ETS 52	330 412
8 15/16 *227,013*	**SNL 3048**	23048 CCK/W33 23048-2CS5K C 3048 K	H 3048/8.15/16 H 3048/8.15/16 E H 3048/8.15/16	4 FRB 12/360 4 FRB 12/360 4 FRB 12/360	TS 48/8.15/16 TNF 48/8.15/16	ETS 48	300 380
	SNL 3148	23148 CCK/W33 23148-2CS5K C 3148 K	H 3148/8.15/16 H 3148/8.15/16 TL H 3148/8.15/16 TL	2 FRB 10/400 2 FRB 10/400 2 FRB 10/400	TS 48/8.15/16 TNF 48/8.15/16	ETS 48	315 396
	SNL 3248	23248 CCK/W33	H 2348/8.15/16	2 FRB 10/440	TS 52/8.15/16 TNF 52/8.15/16	ETS 52	330 406
	SNL 3152	22248 CCK/W33	H 3148/8.15/16	2 FRB 22/440	TS 52/8.15/16 TNF 52/8.15/16	ETS 52	330 412
	SNL 3160	22348 CCK/W33	H 2348/8.15/16	2 FRB 12.5/500	TS 60/8.15/16 TNH 60/8.15/16	ETS 60	360 434
9 7/16 *239,713*	**SNL 3052**	23052 CCK/W33 23052-2CS5K C 3052 K	OH 3052/9.7/16 H OH 3052/9.7/16 HE OH 3052/9.7/16 H	2 FRB 22/400 2 FRB 22/400 2 FRB 22/400	TS 52/9.7/16 TNF 52/9.7/16	ETS 52	315 394
	SNL 3152	23152 CCK/W33 23152-2CS5K C 3152 K	OH 3152/9.7/16 H OH 3152/9.7/16 HTL OH 3152/9.7/16 HTL	2 FRB 10/440 2 FRB 10/440 2 FRB 10/440	TS 52/9.7/16 TNF 52/9.7/16	ETS 52	330 412
	SNL 3252	23252 CCK/W33	OH 2352/9.7/16 H	2 FRB 10/480	TS 64/9.7/16 TNF 64/9.7/16	ETS 64	360 434

[1] 222(00), 223(00), 230(00), 231(00), 232(00)... – spherical roller bearing, C... – CARB toroidal roller bearing. Only typical bearings are listed. Other bearing variants can also fit the housing.
[2] The adapter sleeve fits the bearing in the same line only. If an oil lubricated adapter sleeve is wanted, contact SKF for availability. Only typical adapter sleeves are listed. Other variants can also fit the housing.
[3] The locating rings fit the bearing in the same line only.

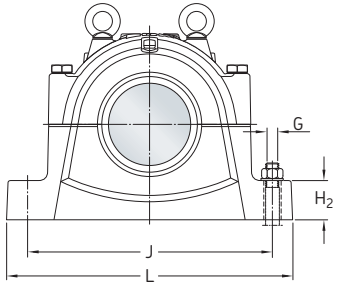

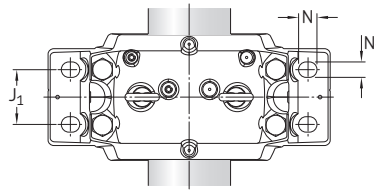

Shaft diameter	Dimensions														Eye bolt according to DIN 580	Mass Housing
d_a	A	A_1	C_a	D_a	H	H_1	H_2	J	J_1	L	N	N_1	s	G	G	
in./*mm*	mm														in.	–	kg
8 1/2 *215,9*	290	240	140	360	434	220	90	540	140	640	42	35	12	30	1 1/4	M 20	139
	320	280	164	440	516	260	100	650	160	770	50	42	13	36	1 1/2	M 24	221
8 15/16 *227,013*	290	240	140	360	434	220	90	540	140	640	42	35	12	30	1 1/4	M 20	139
	310	260	148	400	474	240	95	600	150	700	42	35	12	30	1 1/4	M 24	187
	320	280	180	440	516	260	100	650	160	770	50	42	13	36	1 1/2	M 24	221
	320	280	164	440	516	260	100	650	160	770	50	42	13	36	1 1/2	M 24	221
	350	310	180	500	591	300	110	710	190	830	50	42	22	36	1 1/2	M 30	301
9 7/16 *239,713*	310	260	148	400	474	240	95	600	150	700	42	35	12	30	1 1/4	M 24	187
	320	280	164	440	516	260	100	650	160	770	50	42	13	36	1 1/2	M 24	221
	350	310	194	480	591	300	110	710	190	830	50	42	22	36	1 1/2	M 30	301

5.2 Large SNL plummer block housings for bearings on an adapter sleeve, inch shafts

d_a **9 1/2 – 10** in.
241,3 – 254 mm

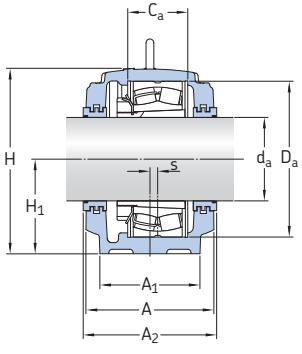

Labyrinth seals,
TS design

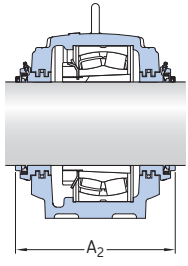

Taconite seals,
TNF design

Shaft diameter d_a	**Housing**	**Appropriate parts** Bearing[1]	Adapter sleeve[2]	Locating ring[3]	Seals	End cover	Width incl. seals A_2
in./*mm*	–	–					mm
9 1/2 *241,3*	**SNL 3052**	23052 CCK/W33 23052-2CS5K C 3052 K	H 3052/9.1/2 H 3052/9.1/2 E H 3052/9.1/2	2 FRB 22/400 2 FRB 22/400 2 FRB 22/400	TS 52/9.1/2 TNF 52/9.1/2	ETS 52	315 394
	SNL 3152	23152 CCK/W33 23152-2CS5K C 3152 K	H 3152/9.1/2 H 3152/9.1/2 TL H 3152/9.1/2 TL	2 FRB 10/440 2 FRB 10/440 2 FRB 10/440	TS 52/9.1/2 TNF 52/9.1/2	ETS 52	330 412
	SNL 3064	22252 CCK/W33	H 3152/9.1/2	2 FRB 25.5/480	TS 64/9.1/2 TNF 64/9.1/2	ETS 64	360 434
	SNL 3252	23252 CCK/W33	H 2352/9.1/2	2 FRB 10/480	TS 64/9.1/2 TNF 64/9.1/2	ETS 64	360 434
	SNL 3164	22352 CCK/W33	H 2352/9.1/2	2 FRB 15.5/540	TS 64/9.1/2 TNF 64/9.1/2	ETS 64	380 454
9 15/16 *252,413*	**SNL 3056**	23056 CCK/W33 C 3056 K	OH 3056/9.15/16 H OH 3056/9.15/16 H	6 FRB 10/420 6 FRB 10/420	TS 56/9.15/16 TNF 56/9.15/16	ETS 56	330 404
10 *254*	**SNL 3056**	23056 CCK/W33 C 3056 K	OH 3056/10 H OH 3056/10 H	6 FRB 10/420 6 FRB 10/420	TS 56/10 TNF 56/10	ETS 56	330 404
	SNL 3156	23156 CCK/W33 23156-2CS5K C 3156 K	OH 3156/10 H OH 3156/10 HTL OH 3156/10 HTL	2 FRB 10/460 2 FRB 10/460 2 FRB 10/460	TS 56/10 TNF 56/10	ETS 56	330 404
	SNL 3160	22256 CCK/W33	OH 3156/10 H	2 FRB 25/500	TS 60/10 TNF 60/10	ETS 60	360 434

[1] 222(00), 223(00), 230(00), 231(00), 232(00)...– spherical roller bearing, C... – CARB toroidal roller bearing.
Only typical bearings are listed. Other bearing variants can also fit the housing.
[2] The adapter sleeve fits the bearing in the same line only. If an oil lubricated adapter sleeve is wanted, contact SKF for availability.
Only typical adapter sleeves are listed. Other variants can also fit the housing.
[3] The locating rings fit the bearing in the same line only.

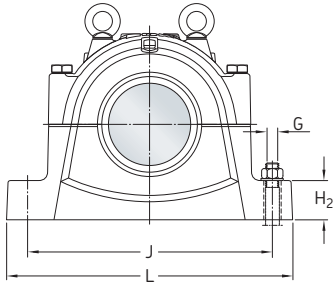

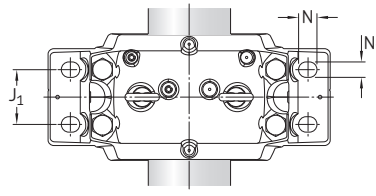

Shaft diameter	**Dimensions**														**Eye bolt** according to DIN 580	**Mass** Housing
d_a	A	A_1	C_a	D_a	H	H_1	H_2	J	J_1	L	N	N_1	s	G	G	
in./*mm*	mm														in.	–	kg
9 1/2 *241,3*	310	260	148	400	474	240	95	600	150	700	42	35	12	30	1 1/4	M 24	187
	320	280	164	440	516	260	100	650	160	770	50	42	13	36	1 1/2	M 24	221
	350	310	181	480	591	300	110	710	190	830	50	42	22	36	1 1/2	M 30	301
	350	310	194	480	591	300	110	710	190	830	50	42	22	36	1 1/2	M 30	301
	370	330	196	540	631	320	115	750	200	880	50	42	23	36	1 1/2	M 30	339
9 15/16 *252,413*	320	280	166	420	516	260	100	650	160	770	50	42	13	36	1 1/2	M 24	221
10 *254*	320	280	166	420	516	260	100	650	160	770	50	42	13	36	1 1/2	M 24	221
	320	280	166	460	550	280	105	670	160	790	50	42	16	36	1 1/2	M 24	252
	350	310	180	500	591	300	110	710	190	830	50	42	22	36	1 1/2	M 30	301

5.2 Large SNL plummer block housings for bearings on an adapter sleeve, inch shafts

d_a **10 7/16 – 10 1/2** in.
265,113 – 266,7 mm

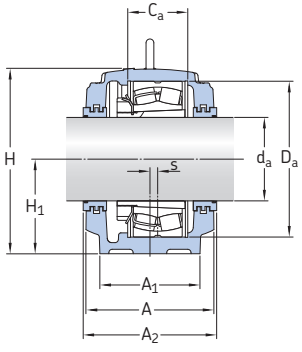

Labyrinth seals,
TS design

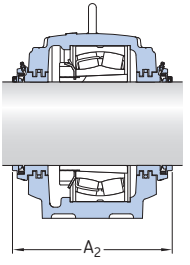

Taconite seals,
TNF design

Shaft diameter d_a	Housing	Appropriate parts Bearing[1]	Adapter sleeve[2]	Locating ring[3]	Seals	End cover	Width incl. seals A_2
in./*mm*	–	–					mm
10 7/16 *265,113*	**SNL 3056**	23056 CCK/W33 C 3056 K	H 3056/10.7/16 H 3056/10.7/16	6 FRB 10/420 6 FRB 10/420	TS 56/10.7/16 TNF 56/10.7/16	ETS 56	330 404
	SNL 3156	23156 CCK/W33 23156-2CS5K C 3156 K	H 3156/10.7/16 H 3156/10.7/16 TL H 3156/10.7/16 TL	2 FRB 10/460 2 FRB 10/460 2 FRB 10/460	TS 56/10.7/16 TNF 56/10.7/16	ETS 56	330 404
	SNL 3256	23256 CCK/W33	H 2356/10.7/16	2 FRB 10/500	TS 60/10.7/16 TNF 60/10.7/16	ETS 60	360 434
	SNL 3160	22256 CCK/W33	H 3156/10.7/16	2 FRB 25/500	TS 60/10.7/16 TNF 60/10.7/16	ETS 60	360 434
	SNL 3168 L	22356 CCK/W33	H 2356/10.7/16	2 FRB 17.5/580	TS 68/10.7/16 TNF 68/10.7/16	ETS 68	410 483
10 1/2 *266,7*	**SNL 3056**	23056 CCK/W33 C 3056 K	H 3056/10.1/2 H 3056/10.1/2	6 FRB 10/420 6 FRB 10/420	TS 56/10.1/2 TNF 56/10.1/2	ETS 56	330 404
	SNL 3156	23156 CCK/W33 23156-2CS5K C 3156 K	H 3156/10.1/2 H 3156/10.1/2 TL H 3156/10.1/2 TL	2 FRB 10/460 2 FRB 10/460 2 FRB 10/460	TS 56/10.1/2 TNF 56/10.1/2	ETS 56	330 404
	SNL 3160	22256 CCK/W33	H 3156/10.1/2	2 FRB 25/500	TS 60/10.1/2 TNF 60/10.1/2	ETS 60	360 434
	SNL 3256	23256 CCK/W33	H 2356/10.1/2	2 FRB 10/500	TS 60/10.1/2 TNF 60/10.1/2	ETS 60	360 434
	SNL 3168 L	22356 CCK/W33	H 2356/10.1/2	2 FRB 17.5/580	TS 68/10.1/2 TNF 68/10.1/2	ETS 68	410 483

[1] 222(00), 223(00), 230(00), 231(00), 232(00)...– spherical roller bearing, C... – CARB toroidal roller bearing.
Only typical bearings are listed. Other bearing variants can also fit the housing.
[2] The adapter sleeve fits the bearing in the same line only. If an oil lubricated adapter sleeve is wanted, contact SKF for availability.
Only typical adapter sleeves are listed. Other variants can also fit the housing.
[3] The locating rings fit the bearing in the same line only.

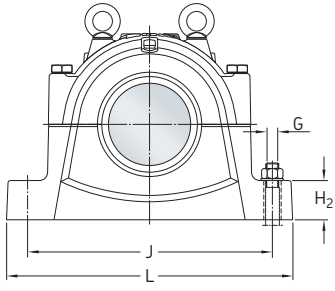

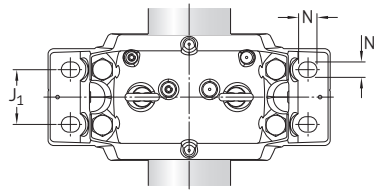

Shaft diameter	**Dimensions**														**Eye bolt** according to DIN 580	**Mass** Housing
d_a	A	A_1	C_a	D_a	H	H_1	H_2	J	J_1	L	N	N_1	s	G	G	
in./*mm*	mm														in.	–	kg
10 7/16 *265,113*	320	280	166	420	516	260	100	650	160	770	50	42	13	36	1 1/2	M 24	221
	320	280	166	460	550	280	105	670	160	790	50	42	16	36	1 1/2	M 24	252
	350	310	196	500	591	300	110	710	190	830	50	42	22	36	1 1/2	M 30	301
	350	310	180	500	591	300	110	710	190	830	50	42	22	36	1 1/2	M 30	301
	400	360	210	580	675	340	120	810	220	950	50	42	24	36	1 1/2	M 30	427
10 1/2 *266,7*	320	280	166	420	516	260	100	650	160	770	50	42	13	36	1 1/2	M 24	221
	320	280	166	460	550	280	105	670	160	790	50	42	16	36	1 1/2	M 24	252
	350	310	180	500	591	300	110	710	190	830	50	42	22	36	1 1/2	M 30	301
	350	310	196	500	591	300	110	710	190	830	50	42	22	36	1 1/2	M 30	301
	400	360	210	580	675	340	120	810	220	950	50	42	24	36	1 1/2	M 30	427

5.2 Large SNL plummer block housings for bearings on an adapter sleeve, inch shafts

d_a **10 15/16 – 11 1/2** in.
277,813 – 292,1 mm

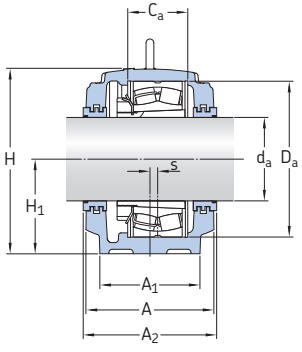

Labyrinth seals, TS design

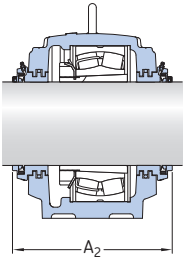

Taconite seals, TNF design

Shaft diameter d_a	**Housing**	**Appropriate parts** Bearing[1]	Adapter sleeve[2]	Locating ring[3]	Seals	End cover	Width incl. seals A_2
in./*mm*	–	–					mm
10 15/16 *277,813*	**SNL 3060**	23060 CCK/W33 C 3060 KM	OH 3060/10.15/16 H OH 3060/10.15/16 H	2 FRB 25/460 2 FRB 25/460	TS 60/10.15/16 TNF 60/10.15/16	ETS 60	330 404
	SNL 3160	23160 CCK/W33 23160-2CS5K C 3160 K	OH 3160/10.15/16 H OH 3160/10.15/16 HE OH 3160/10.15/16 H	2 FRB 10/500 2 FRB 10/500 2 FRB 10/500	TS 60/10.15/16 TNF 60/10.15/16	ETS 60	360 434
	SNL 3260	23260 CCK/W33	OH 3260/10.15/16 H	2 FRB 10/540	TS 64/10.15/16 TNF 64/10.15/16	ETS 64	380 454
	SNL 3164	22260 CCK/W33	OH 3160/10.15/16 H	2 FRB 28/540	TS 64/10.15/16 TNF 64/10.15/16	ETS 64	380 454
11 *279,4*	**SNL 3060**	23060 CCK/W33 C 3060 KM	OH 3060/11 H OH 3060/11 H	2 FRB 25/460 2 FRB 25/460	TS 60/11 TNF 60/11	ETS 60	330 404
	SNL 3160	23160 CCK/W33 23160-2CS5K C 3160 K	OH 3160/11 H OH 3160/11 HE OH 3160/11 H	2 FRB 10/500 2 FRB 10/500 2 FRB 10/500	TS 60/11 TNF 60/11	ETS 60	360 434
	SNL 3164	22260 CCK/W33	OH 3160/11 H	2 FRB 28/540	TS 64/11 TNF 64/11	ETS 64	380 454
	SNL 3260	23260 CCK/W33	OH 3260/11 H	2 FRB 10/540	TS 64/11 TNF 64/11	ETS 64	380 454
11 7/16 *290,513*	**SNL 3064**	23064 CCK/W33 C 3064 KM	OH 3064/11.7/16 H OH 3064/11.7/16 H	6 FRB 10/480 6 FRB 10/480	TS 64/11.7/16 TNF 64/11.7/16	ETS 64	360 434
11 1/2 *292,1*	**SNL 3168 F**	22264 CCK/W33	OH 3164/11.1/2 H	2 FRB 20/580	TS 68/11.1/2 TNF 68/11.1/2	ETS 68	410 483
	SNL 3064	23064 CCK/W33 C 3064 KM	OH 3064/11.1/2 H OH 3064/11.1/2 H	6 FRB 10/480 6 FRB 10/480	TS 64/11.1/2 TNF 64/11.1/2	ETS 64	360 434

[1] 222(00), 223(00), 230(00), 231(00), 232(00)...– spherical roller bearing, C... – CARB toroidal roller bearing. Only typical bearings are listed. Other bearing variants can also fit the housing.
[2] The adapter sleeve fits the bearing in the same line only. If an oil lubricated adapter sleeve is wanted, contact SKF for availability. Only typical adapter sleeves are listed. Other variants can also fit the housing.
[3] The locating rings fit the bearing in the same line only.

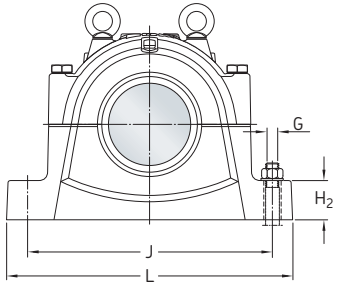

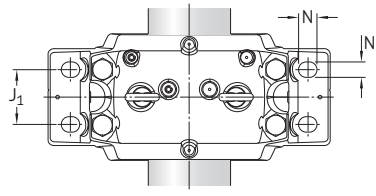

Shaft diameter	Dimensions														Eye bolt according to DIN 580	Mass Housing
d_a	A	A_1	C_a	D_a	H	H_1	H_2	J	J_1	L	N	N_1	s	G	G	
in./*mm*	mm														in.	–	kg
10 15/16 *277,813*	320	280	168	460	550	280	105	670	160	790	50	42	16	36	1 1/2	M 24	252
	350	310	180	500	591	300	110	710	190	830	50	42	22	36	1 1/2	M 30	301
	370	330	212	540	631	320	115	750	200	880	50	42	23	36	1 1/2	M 30	339
	370	330	196	540	631	320	115	750	200	880	50	42	23	36	1 1/2	M 30	339
11 *279,4*	320	280	168	460	550	280	105	670	160	790	50	42	16	36	1 1/2	M 24	252
	350	310	180	500	591	300	110	710	190	830	50	42	22	36	1 1/2	M 30	301
	370	330	196	540	631	320	115	750	200	880	50	42	23	36	1 1/2	M 30	339
	370	330	212	540	631	320	115	750	200	880	50	42	23	36	1 1/2	M 30	339
11 7/16 *290,513*	350	310	181	480	591	300	110	710	190	830	50	42	22	36	1 1/2	M 30	301
11 1/2 *292,1*	400	360	190	580	675	340	120	810	220	950	50	42	24	36	1 1/2	M 30	430
	350	310	181	480	591	300	110	710	190	830	50	42	22	36	1 1/2	M 30	301

5.2 Large SNL plummer block housings for bearings on an adapter sleeve, inch shafts

d_a **11 15/16 – 12** in.
303,213 – 304,8 mm

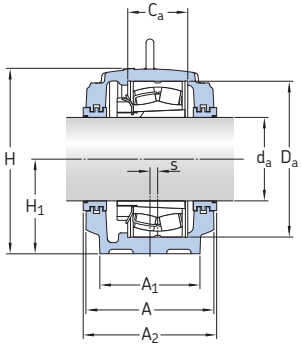

Labyrinth seals,
TS design

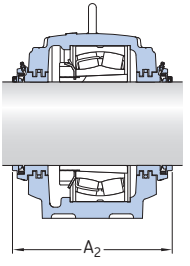

Taconite seals,
TNF design

Shaft diameter d_a	Housing	Appropriate parts Bearing[1]	Adapter sleeve[2]	Locating ring[3]	Seals	End cover	Width incl. seals A_2
in./*mm*	–	–					mm
11 15/16 *303,213*	**SNL 3064**	23064 CCK/W33 C 3064 KM	H 3064/11.15/16 H 3064/11.15/16	6 FRB 10/480 6 FRB 10/480	TS 64/11.15/16 TNF 64/11.15/16	ETS 64	360 434
	SNL 3164	23164 CCK/W33 23164-2CS5K C 3164 KM	H 3164/11.15/16 H 3164/11.15/16 H 3164/11.15/16	2 FRB 10/540 2 FRB 10/540 2 FRB 10/540	TS 64/11.15/16 TNF 64/11.15/16	ETS 64	380 454
	SNL 3264 F	23264 CCK/W33	H 3264/11.15/16	–	TS 68/11.15/16 TNF 68/11.15/16	ETS 68	410 483
	SNL 3264 L	23264 CCK/W33	H 3264/11.15/16	–	TS 68/11.15/16 TNF 68/11.15/16	ETS 68	410 483
12 *304,8*	**SNL 3064**	23064 CCK/W33 C 3064 KM	H 3064/12 H 3064/12	6 FRB 10/480 6 FRB 10/480	TS 64/12 TNF 64/12	ETS 64	360 434
	SNL 3164	23164 CCK/W33 23164-2CS5K C 3164 KM	H 3164/12 H 3164/12 H 3164/12	2 FRB 10/540 2 FRB 10/540 2 FRB 10/540	TS 64/12 TNF 64/12	ETS 64	380 454
	SNL 3168 F	22264 CCK/W33	H 3164/12	2 FRB 20/580	TS 68/12 TNF 68/12	ETS 68	410 483
	SNL 3264 F	23264 CCK/W33	H 3264/12	–	TS 68/12 TNF 68/12	ETS 68	410 483
	SNL 3264 L	23264 CCK/W33	H 3264/12	–	TS 68/12 TNF 68/12	ETS 68	410 483

[1] 222(00), 223(00), 230(00), 231(00), 232(00)...– spherical roller bearing, C... – CARB toroidal roller bearing.
Only typical bearings are listed. Other bearing variants can also fit the housing.
[2] The adapter sleeve fits the bearing in the same line only. If an oil lubricated adapter sleeve is wanted, contact SKF for availability.
Only typical adapter sleeves are listed. Other variants can also fit the housing.
[3] The locating rings fit the bearing in the same line only.

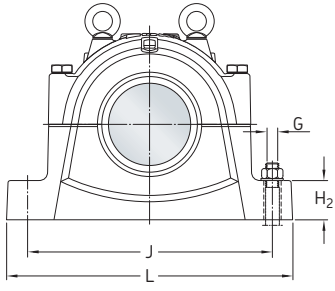

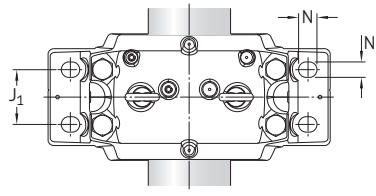

Shaft diameter	**Dimensions**														**Eye bolt** according to DIN 580	**Mass** Housing
d_a	A	A_1	C_a	D_a	H	H_1	H_2	J	J_1	L	N	N_1	s	G	G	
in./*mm*	mm														in.	–	kg
11 15/16 *303,213*	350	310	181	480	591	300	110	710	190	830	50	42	22	36	1 1/2	M 30	301
	370	330	196	540	631	320	115	750	200	880	50	42	23	36	1 1/2	M 30	339
	400	360	208	580	675	340	120	810	220	950	50	42	24	36	1 1/2	M 30	430
	400	360	228	580	675	340	120	810	220	950	50	42	24	36	1 1/2	M 30	427
12 *304,8*	350	310	181	480	591	300	110	710	190	830	50	42	22	36	1 1/2	M 30	301
	370	330	196	540	631	320	115	750	200	880	50	42	23	36	1 1/2	M 30	339
	400	360	190	580	675	340	120	810	220	950	50	42	24	36	1 1/2	M 30	430
	400	360	208	580	675	340	120	810	220	950	50	42	24	36	1 1/2	M 30	430
	400	360	228	580	675	340	120	810	220	950	50	42	24	36	1 1/2	M 30	427

5.2 Large SNL plummer block housings for bearings on an adapter sleeve, inch shafts

d_a **12 7/16 – 12 1/2** in.
315,913 – 317,5 mm

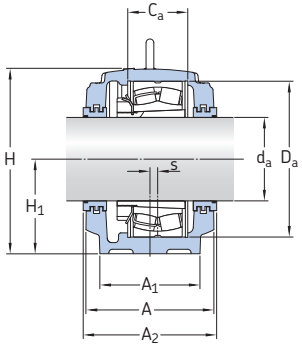

Labyrinth seals, TS design

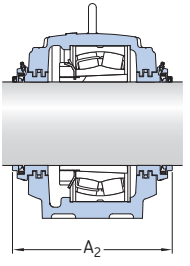

Taconite seals, TNF design

Shaft diameter d_a	Housing	Appropriate parts Bearing[1]	Adapter sleeve[2]	Locating ring[3]	Seals	End cover	Width incl. seals A_2
in./*mm*	–	–					mm
12 7/16 *315,913*	**SNL 3068**	23068 CCK/W33 C 3068 KM	OH 3068/12.7/16 H OH 3068/12.7/16 H	4 FRB 16/520 4 FRB 16/520	TS 68/12.7/16 TNF 68/12.7/16	ETS 68	380 453
	SNL 3168 F	23168 CCK/W33 23168-2CS5K C 3168 KM	OH 3168/12.7/16 H OH 3168/12.7/16 HE OH 3168/12.7/16 H	– –	TS 68/12.7/16 TNF 68/12.7/16	ETS 68	410 483
	SNL 3168 L	23168 CCK/W33 23168-2CS5K	OH 3168/12.7/16 H OH 3168/12.7/16 HE	–	TS 68/12.7/16 TNF 68/12.7/16	ETS 68	410 483
	SNL 3268 F	23268 CAK/W33	OH 3268/12.7/16 H	–	TS 76/12.7/16 TNF 76/12.7/16	ETS 76	410 483
	SNL 3268 L	23268 CAK/W33	OH 3268/12.7/16 H	–	TS 76/12.7/16 TNF 76/12.7/16	ETS 76	410 483
12 1/2 *317,5*	**SNL 3068**	23068 CCK/W33 C 3068 KM	OH 3068/12.1/2 H OH 3068/12.1/2 H	4 FRB 16/520 4 FRB 16/520	TS 68/12.1/2 TNF 68/12.1/2	ETS 68	380 453
	SNL 3168 F	23168 CCK/W33 23168-2CS5K C 3168 KM	OH 3168/12.1/2 H OH 3168/12.1/2 HE OH 3168/12.1/2 H	– – –	TS 68/12.1/2 TNF 68/12.1/2	ETS 68	410 483
	SNL 3168 L	23168 CCK/W33 23168-2CS5K	OH 3168/12.1/2 H OH 3168/12.1/2 HE	– –	TS 68/12.1/2 TNF 68/12.1/2	ETS 68	410 483
	SNL 3268 F	23268 CAK/W33	OH 3268/12.1/2 H	–	TS 76/12.1/2 TNF 76/12.1/2	ETS 76	410 483
	SNL 3268 L	23268 CAK/W33	OH 3268/12.1/2 H	–	TS 76/12.1/2 TNF 76/12.1/2	ETS 76	410 483

[1] 222(00), 223(00), 230(00), 231(00), 232(00)...– spherical roller bearing, C... – CARB toroidal roller bearing. Only typical bearings are listed. Other bearing variants can also fit the housing.
[2] The adapter sleeve fits the bearing in the same line only. If an oil lubricated adapter sleeve is wanted, contact SKF for availability. Only typical adapter sleeves are listed. Other variants can also fit the housing.
[3] The locating rings fit the bearing in the same line only.

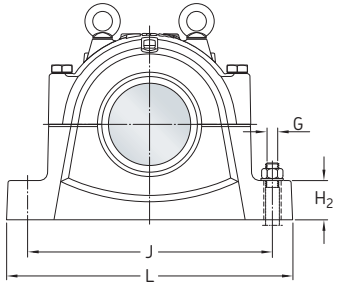

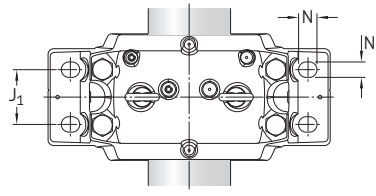

Shaft diameter	Dimensions															Eye bolt according to DIN 580	Mass Housing
d_a	A	A_1	C_a	D_a	H	H_1	H_2	J	J_1	L	N	N_1	s	G	G		
in./*mm*	mm														in.	–	kg
12 7/16 *315,913*	370	330	197	520	631	320	115	750	200	880	50	42	23	36	1 1/2	M 30	339
	400	360	190	580	675	340	120	810	220	950	50	42	24	36	1 1/2	M 30	430
	400	360	210	580	675	340	120	810	220	950	50	42	24	36	1 1/2	M 30	427
	400	360	224	620	715	360	120	870	220	1 040	50	42	30	36	1 1/2	M 36	473
	400	360	244	620	715	360	120	870	220	1 040	50	42	30	36	1 1/2	M 36	470
12 1/2 *317,5*	370	330	197	520	631	320	115	750	200	880	50	42	23	36	1 1/2	M 30	339
	400	360	190	580	675	340	120	810	220	950	50	42	24	36	1 1/2	M 30	430
	400	360	210	580	675	340	120	810	220	950	50	42	24	36	1 1/2	M 30	427
	400	360	224	620	715	360	120	870	220	1 040	50	42	30	36	1 1/2	M 36	473
	400	360	244	620	715	360	120	870	220	1 040	50	42	30	36	1 1/2	M 36	470

5.2 Large SNL plummer block housings for bearings on an adapter sleeve, inch shafts

d_a **12 15/16 – 13 7/16** in.
328,613 – 341,313 mm

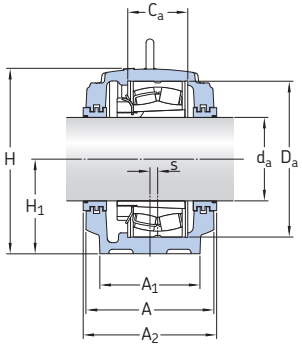

Labyrinth seals,
TS design

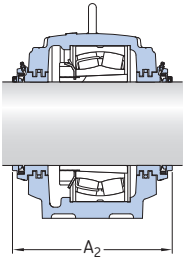

Taconite seals,
TNF design

Shaft diameter d_a	**Housing**	**Appropriate parts** Bearing[1]	Adapter sleeve[2]	Locating ring[3]	Seals	End cover	Width incl. seals A_2
in./*mm*	–	–					mm
12 15/16 *328,613*	**SNL 3072**	23072 CCK/W33 C 3072 KM	OH 3072/12.15/16 H OH 3072/12.15/16 H	4 FRB 16/540 4 FRB 16/540	TS 72/12.15/16 TNF 72/12.15/16	ETS 72	380 453
13 *330,2*	**SNL 3072**	23072 CCK/W33 C 3072 KM	OH 3072/13 H OH 3072/13 H	4 FRB 16/540 4 FRB 16/540	TS 72/13 TNF 72/13	ETS 72	380 453
	SNL 3180 L	22272 CAK/W33	OH 3172/13 H	2 FRB 25/650	TS 80/13 TNF 80/13	ETS 80	440 513
13 7/16 *341,313*	**SNL 3072**	23072 CCK/W33 C 3072 KM	H 3072/13.7/16 H 3072/13.7/16	4 FRB 16/540 4 FRB 16/540	TS 72/13.7/16 TNF 72/13.7/16	ETS 72	380 453
	SNL 3172 F	23172 CCK/W33 C 3172 KM	H 3172/13.7/16 H 3172/13.7/16	– –	TS 72/13.7/16 TNF 72/13.7/16	ETS 72	410 483
	SNL 3172 L	23172 CCK/W33	H 3172/13.7/16	–	TS 72/13.7/16 TNF 72/13.7/16	ETS 72	410 483
	SNL 3272 F	23272 CAK/W33	H 3272/13.7/16	–	TS 80/13.7/16 TNF 80/13.7/16	ETS 80	440 513
	SNL 3272 L	23272 CAK/W33	H 3272/13.7/16	–	TS 80/13.7/16 TNF 80/13.7/16	ETS 80	440 513

[1] 222(00), 223(00), 230(00), 231(00), 232(00)...– spherical roller bearing, C... – CARB toroidal roller bearing.
Only typical bearings are listed. Other bearing variants can also fit the housing.
[2] The adapter sleeve fits the bearing in the same line only. If an oil lubricated adapter sleeve is wanted, contact SKF for availability.
Only typical adapter sleeves are listed. Other variants can also fit the housing.
[3] The locating rings fit the bearing in the same line only.

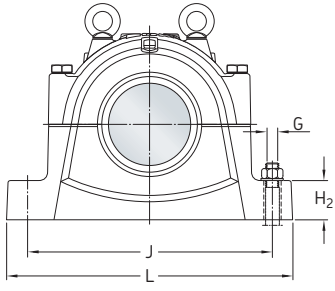

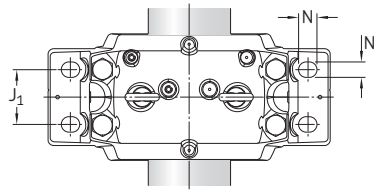

Shaft diameter	**Dimensions**															**Eye bolt** according to DIN 580	**Mass** Housing
d_a	A	A_1	C_a	D_a	H	H_1	H_2	J	J_1	L	N	N_1	s	G	G		
in./*mm*	mm														in.	–	kg
12 15/16 *328,613*	370	330	198	540	631	320	115	750	200	880	50	42	23	36	1 1/2	M 30	339
13 *330,2*	370	330	198	540	631	320	115	750	200	880	50	42	23	36	1 1/2	M 30	339
	430	390	220	650	755	380	125	950	240	1 120	60	48	30	42	1 3/4	M 42	595
13 7/16 *341,313*	370	330	198	540	631	320	115	750	200	880	50	42	23	36	1 1/2	M 30	339
	400	360	192	600	695	350	120	840	220	1 000	50	42	30	36	1 1/2	M 36	458
	400	360	212	600	695	350	120	840	220	1 000	50	42	30	36	1 1/2	M 36	454
	430	390	232	650	755	380	125	950	240	1 120	60	48	30	42	1 3/4	M 42	595
	430	390	252	650	755	380	125	950	240	1 120	60	48	30	42	1 3/4	M 42	595

5.2 Large SNL plummer block housings for bearings on an adapter sleeve, inch shafts

d_a **13 1/2 – 13 15/16** in.
342,9 – 354,013 mm

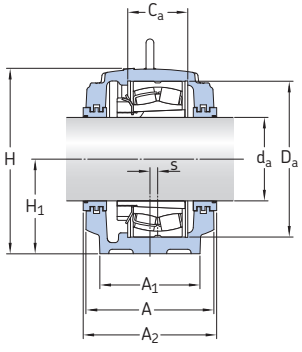

Labyrinth seals, TS design

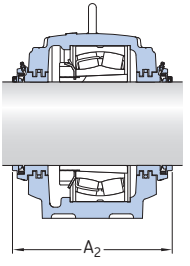

Taconite seals, TNF design

Shaft diameter d_a	**Housing**	**Appropriate parts** Bearing[1]	Adapter sleeve[2]	Locating ring[3]	Seals	End cover	Width incl. seals A_2
in./*mm*	–	–					mm
13 1/2 *342,9*	**SNL 3072**	23072 CCK/W33 C 3072 KM	H 3072/13.1/2 H 3072/13.1/2	4 FRB 16/540 4 FRB 16/540	TS 72/13.1/2 TNF 72/13.1/2	ETS 72	380 453
	SNL 3172 F	23172 CCK/W33 C 3172 KM	H 3172/13.1/2 H 3172/13.1/2	– 	TS 72/13.1/2 TNF 72/13.1/2	ETS 72	410 483
	SNL 3172 L	23172 CCK/W33	H 3172/13.1/2	–	TS 72/13.1/2 TNF 72/13.1/2	ETS 72	410 483
	SNL 3180 L	22272 CAK/W33	H 3172/13.1/2	2 FRB 25/650	TS 80/13.1/2 TNF 80/13.1/2	ETS 80	440 513
	SNL 3272 F	23272 CAK/W33	H 3272/13.1/2	–	TS 80/13.1/2 TNF 80/13.1/2	ETS 80	440 513
	SNL 3272 L	23272 CAK/W33	H 3272/13.1/2	–	TS 80/13.1/2 TNF 80/13.1/2	ETS 80	440 513
13 15/16 *354,013*	**SNL 3076 F**	23076 CCK/W33 C 3076 KM	OH 3076/13.15/16 H OH 3076/13.15/16 H	– –	TS 76/13.15/16 TNF 76/13.15/16	ETS 76	410 483
	SNL 3076 L	23076 CCK/W33	OH 3076/13.15/16 H	–	TS 76/13.15/16 TNF 76/13.15/16	ETS 76	410 483
	SNL 3176 F	23176 CAK/W33 C 3176 KMB	OH 3176/13.15/16 H OH 3176/13.15/16 HE	– –	TS 76/13.15/16 TNF 76/13.15/16	ETS 76	410 483
	SNL 3176 L	23176 CAK/W33	OH 3176/13.15/16 H	–	TS 76/13.15/16 TNF 76/13.15/16	ETS 76	410 483
	SNL 3276 F	23276 CAK/W33	OH 3276/13.15/16 H	–	TS 92/13.15/16 TNF 92/13.15/16	ETS 92	470 543
	SNL 3276 L	23276 CAK/W33	OH 3276/13.15/16 H	–	TS 92/13.15/16 TNF 92/13.15/16	ETS 92	470 543

[1] 222(00), 223(00), 230(00), 231(00), 232(00)... – spherical roller bearing, C... – CARB toroidal roller bearing. Only typical bearings are listed. Other bearing variants can also fit the housing.
[2] The adapter sleeve fits the bearing in the same line only. If an oil lubricated adapter sleeve is wanted, contact SKF for availability. Only typical adapter sleeves are listed. Other variants can also fit the housing.
[3] The locating rings fit the bearing in the same line only.

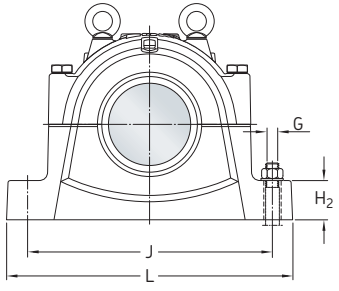

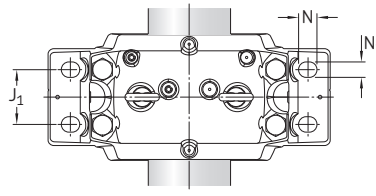

Shaft diameter	Dimensions															Eye bolt according to DIN 580	Mass Housing
d_a	A	A_1	C_a	D_a	H	H_1	H_2	J	J_1	L	N	N_1	s	G	G		
in./*mm*	mm														in.	–	kg
13 1/2 *342,9*	370	330	198	540	631	320	115	750	200	880	50	42	23	36	1 1/2	M 30	339
	400	360	192	600	695	350	120	840	220	1 000	50	42	30	36	1 1/2	M 36	458
	400	360	212	600	695	350	120	840	220	1 000	50	42	30	36	1 1/2	M 36	454
	430	390	220	650	755	380	125	950	240	1 120	60	48	30	42	1 3/4	M 42	595
	430	390	232	650	755	380	125	950	240	1 120	60	48	30	42	1 3/4	M 42	595
	430	390	252	650	755	380	125	950	240	1 120	60	48	30	42	1 3/4	M 42	595
13 15/16 *354,013*	400	360	135	560	675	340	120	810	220	950	50	42	24	36	1 1/2	M 30	430
	400	360	180	560	675	340	120	810	220	950	50	42	24	36	1 1/2	M 30	427
	400	360	194	620	715	360	120	870	220	1 040	50	42	30	36	1 1/2	M 36	473
	400	360	214	620	715	360	120	870	220	1 040	50	42	30	36	1 1/2	M 36	470
	460	420	240	680	810	410	130	1 000	260	1 170	60	48	35	42	1 3/4	M 42	716
	460	420	260	680	810	410	130	1 000	260	1 170	60	48	35	42	1 3/4	M 42	709

5.2 Large SNL plummer block housings for bearings on an adapter sleeve, inch shafts

d_a **14 – 15** in.
355,6 – 381 mm

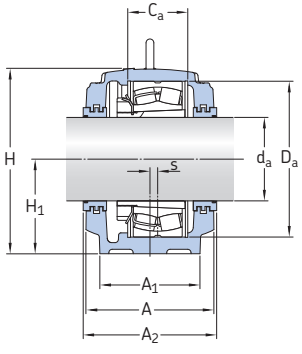

Labyrinth seals,
TS design

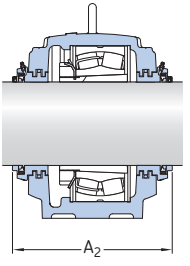

Taconite seals,
TNF design

Shaft diameter d_a	**Housing**	**Appropriate parts** Bearing[1]	Adapter sleeve[2]	Seals	End cover	Width incl. seals A_2
in./*mm*	–	–				mm
14 *355,6*	**SNL 3076 F**	23076 CCK/W33 C 3076 KM	OH 3076/14 H OH 3076/14 H	TS 76/14 TNF 76/14	ETS 76	410 483
	SNL 3076 L	23076 CCK/W33	OH 3076/14 H	TS 76/14 TNF 76/14	ETS 76	410 483
	SNL 3176 F	23176 CAK/W33 C 3176 KMB	OH 3176/14 H OH 3176/14 HE	TS 76/14 TNF 76/14	ETS 76	410 483
	SNL 3176 L	23176 CAK/W33	OH 3176/14 H	TS 76/14 TNF 76/14	ETS 76	410 483
	SNL 3276 F	23276 CAK/W33	OH 3276/14 H	TS 92/14 TNF 92/14	ETS 92	470 543
	SNL 3276 L	23276 CAK/W33	OH 3276/14 H	TS 92/14 TNF 92/14	ETS 92	470 543
15 *381*	**SNL 3080 F**	23080 CCK/W33 C 3080 KM	H 3080/15 H 3080/15	TS 80/15 TNF 80/15	ETS 80	410 483
	SNL 3080 L	23080 CCK/W33	H 3080/15	TS 80/15 TNF 80/15	ETS 80	410 483
	SNL 3180 F	23180 CAK/W33 C 3180 KM	H 3180/15 H 3180/15	TS 80/15 TNF 80/15	ETS 80	440 513
	SNL 3180 L	23180 CAK/W33	H 3180/15	TS 80/15 TNF 80/15	ETS 80	440 513
	SNL 3280 F	23280 CAK/W33	H 3280/15	TS 88/15 TNF 88/15	ETS 88	470 543
	SNL 3280 L	23280 CAK/W33	H 3280/15	TS 88/15 TNF 88/15	ETS 88	470 543

[1] 222(00), 223(00), 230(00), 231(00), 232(00)... – spherical roller bearing, C... – CARB toroidal roller bearing.
Only typical bearings are listed. Other bearing variants can also fit the housing.
[2] The adapter sleeve fits the bearing in the same line only. If an oil lubricated adapter sleeve is wanted, contact SKF for availability.
Only typical adapter sleeves are listed. Other variants can also fit the housing.

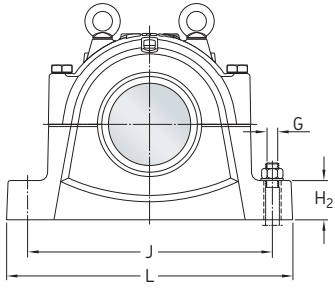

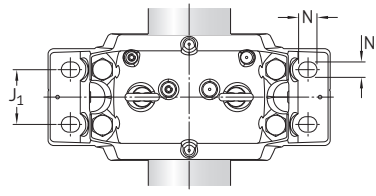

Shaft diameter	Dimensions															Eye bolt according to DIN 580	Mass Housing
d_a	A	A_1	C_a	D_a	H	H_1	H_2	J	J_1	L	N	N_1	s	G	G		
in./*mm*	mm														in.	–	kg
14 *355,6*	400	360	135	560	675	340	120	810	220	950	50	42	24	36	1 1/2	M 30	430
	400	360	180	560	675	340	120	810	220	950	50	42	24	36	1 1/2	M 30	427
	400	360	194	620	715	360	120	870	220	1 040	50	42	30	36	1 1/2	M 36	473
	400	360	214	620	715	360	120	870	220	1 040	50	42	30	36	1 1/2	M 36	470
	460	420	240	680	810	410	130	1 000	260	1 170	60	48	35	42	1 3/4	M 42	716
	460	420	260	680	810	410	130	1 000	260	1 170	60	48	35	42	1 3/4	M 42	709
15 *381*	400	360	148	600	695	350	120	840	220	1 000	50	42	30	36	1 1/2	M 36	458
	400	360	192	600	695	350	120	840	220	1 000	50	42	30	36	1 1/2	M 36	454
	430	390	200	650	755	380	125	950	240	1 120	60	48	30	42	1 3/4	M 42	595
	430	390	220	650	755	380	125	950	240	1 120	60	48	30	42	1 3/4	M 42	595
	460	420	256	720	810	410	130	1 000	260	1 170	60	48	35	42	1 3/4	M 42	716
	460	420	276	720	810	410	130	1 000	260	1 170	60	48	35	42	1 3/4	M 42	709

5.2 Large SNL plummer block housings for bearings on an adapter sleeve, inch shafts

d_a **15 3/4 – 16 1/2** in.
400,05 – 419,1 mm

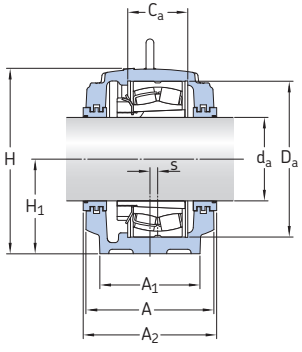

Labyrinth seals,
TS design

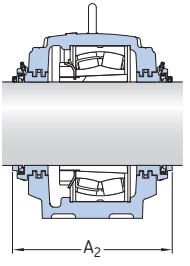

Taconite seals,
TNF design

Shaft diameter d_a	Housing	Appropriate parts Bearing[1]	Adapter sleeve[2]	Seals	End cover	Width incl. seals A_2
in./*mm*	–	–				mm
15 3/4 *400,05*	**SNL 3084 F**	23084 CAK/W33 C 3084 KM	H 3084/15.3/4 H 3084/15.3/4	TS 84/15.3/4 TNF 84/15.3/4	ETS 84	410 483
	SNL 3084 L	23084 CAK/W33	H 3084/15.3/4	TS 84/15.3/4 TNF 84/15.3/4	ETS 84	410 483
	SNL 3184 F	23184 CKJ/W33 C 3184 KM	H 3184/15.3/4 H 3184/15.3/4	TS 84/15.3/4 TNF 84/15.3/4	ETS 84	470 543
	SNL 3184 L	23184 CKJ/W33	H 3184/15.3/4	TS 84/15.3/4 TNF 84/15.3/4	ETS 84	470 543
	SNL 3284 F	23284 CAK/W33	H 3284/15.3/4	TS 92/15.3/4 TNF 92/15.3/4	ETS 92	480 553
	SNL 3284 L	23284 CAK/W33	H 3284/15.3/4	TS 92/15.3/4 TNF 92/15.3/4	ETS 92	480 553
16 1/2 *419,1*	**SNL 3088 F**	23088 CAK/W33 C 3088 KMB	OH 3088/16.1/2 H OH 3088/16.1/2 HE	TS 88/16.1/2 TNF 88/16.1/2	ETS 88	440 513
	SNL 3088 L	23088 CAK/W33	OH 3088/16.1/2 H	TS 88/16.1/2 TNF 88/16.1/2	ETS 88	440 513
	SNL 3188 F	23188 CAK/W33 C 3188 KMB	OH 3188/16.1/2 H OH 3188/16.1/2 HE	TS 88/16.1/2 TNF 88/16.1/2	ETS 88	470 543
	SNL 3188 L	23188 CAK/W33	OH 3188/16.1/2 H	TS 88/16.1/2 TNF 88/16.1/2	ETS 88	470 543
	SNL 3288 F	23288 CAK/W33	OH 3288/16.1/2 H	TS 96/16.1/2 TNF 96/16.1/2	ETS 96	480 553
	SNL 3288 L	23288 CAK/W33	OH 3288/16.1/2 H	TS 96/16.1/2 TNF 96/16.1/2	ETS 96	480 553

[1] 222(00), 223(00), 230(00), 231(00), 232(00)... – spherical roller bearing, C... – CARB toroidal roller bearing.
Only typical bearings are listed. Other bearing variants can also fit the housing.
[2] The adapter sleeve fits the bearing in the same line only. If an oil lubricated adapter sleeve is wanted, contact SKF for availability.
Only typical adapter sleeves are listed. Other variants can also fit the housing.

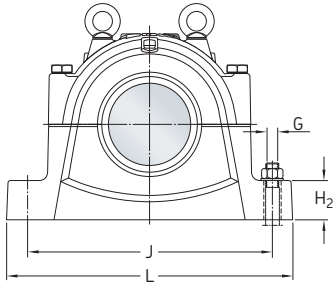

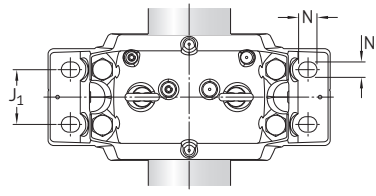

Shaft diameter	Dimensions															Eye bolt according to DIN 580	Mass Housing
d_a	A	A_1	C_a	D_a	H	H_1	H_2	J	J_1	L	N	N_1	s	G	G		
in./*mm*	mm														in.	–	kg
15 3/4 *400,05*	400	360	150	620	715	360	120	870	220	1 040	50	42	30	36	1 1/2	M 36	473
	400	360	194	620	715	360	120	870	220	1 040	50	42	30	36	1 1/2	M 36	470
	460	420	224	700	810	410	130	1 000	260	1 170	60	48	35	42	1 3/4	M 42	716
	460	420	244	700	810	410	130	1 000	260	1 170	60	48	35	42	1 3/4	M 42	709
	470	440	272	760	880	440	145	1 070	260	1 280	60	48	40	42	1 3/4	M 48	865
	470	440	292	760	880	440	145	1 070	260	1 280	60	48	40	42	1 3/4	M 48	859
16 1/2 *419,1*	430	390	157	650	755	380	125	950	240	1 120	60	48	30	42	1 3/4	M 42	595
	430	390	200	650	755	380	125	950	240	1 120	60	48	30	42	1 3/4	M 42	595
	460	430	226	720	835	420	135	1 030	260	1 220	60	48	35	42	1 3/4	M 42	755
	460	430	246	720	835	420	135	1 030	260	1 220	60	48	35	42	1 3/4	M 42	751
	470	440	280	790	920	460	155	1 110	260	1 330	70	56	40	48	2	M 48	947
	470	440	300	790	920	460	155	1 110	260	1 330	70	56	40	48	2	M 48	941

5.2 Large SNL plummer block housings for bearings on an adapter sleeve, inch shafts

d_a **17 – 19 1/2** in.
431,8 – 495,3 mm

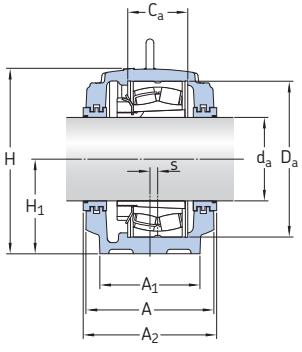

Labyrinth seals,
TS design

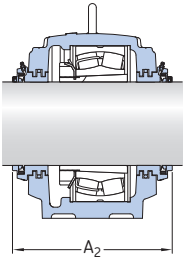

Taconite seals,
TNF design

Shaft diameter d_a	**Housing**	**Appropriate parts** Bearing[1]	Adapter sleeve[2]	Seals	End cover	Width incl. seals A_2
in./*mm*	–	–				mm
17 *431,8*	**SNL 3092 F**	23092 CAK/W33 C 3092 KM	OH 3092/17 H OH 3092/17 H	TS 92/17 TNF 92/17	ETS 92	470 543
	SNL 3092 L	23092 CAK/W33	OH 3092/17 H	TS 92/17 TNF 92/17	ETS 92	470 543
	SNL 3192 F	23192 CAK/W33 C 3192 KM	OH 3192/17 H OH 3192/17 H	TS 92/17 TNF 92/17	ETS 92	480 553
	SNL 3192 L	23192 CAK/W33	OH 3192/17 H	TS 92/17 TNF 92/17	ETS 92	480 553
18 *457,2*	**SNL 3096 F**	23096 CAK/W33 C 3096 KM	OH 3096/18 H OH 3096/18 H	TS 96/18 TNF 96/18	ETS 96	470 543
	SNL 3096 L	23096 CAK/W33	OH 3096/18 H	TS 96/18 TNF 96/18	ETS 96	470 543
	SNL 3196 F	23196 CAK/W33 C 3196 KMB	OH 3196/18 H OH 3196/18 HE	TS 96/18 TNF 96/18	ETS 96	480 553
	SNL 3196 L	23196 CAK/W33	OH 3196/18 H	TS 96/18 TNF 96/18	ETS 96	480 553
18 1/2 *469,9*	**SNL 30/500 F**	230/500 CAK/W33 C 30/500 KM	OH 30/500/18.1/2 H OH 30/500/18.1/2 H	TS 30/500/18.1/2 TNF 30/500/18.1/2	ETS 500	470 543
	SNL 30/500 L	230/500 CAK/W33	OH 30/500/18.1/2 H	TS 30/500/18.1/2 TNF 30/500/18.1/2	ETS 500	470 543
19 1/2 *495,3*	**SNL 30/530 F**	230/530 CAK/W33 C 30/530 KM	OH 30/530/19.1/2 H OH 30/530/19.1/2 H	TS 30/530/19.1/2 TNF 30/530/19.1/2	ETS 530	480 553
	SNL 30/530 L	230/530 CAK/W33	OH 30/530/19.1/2 H	TS 30/530/19.1/2 TNF 30/530/19.1/2	ETS 530	480 553

[1] 222(00), 223(00), 230(00), 231(00), 232(00)... – spherical roller bearing, C... – CARB toroidal roller bearing.
Only typical bearings are listed. Other bearing variants can also fit the housing.
[2] The adapter sleeve fits the bearing in the same line only. If an oil lubricated adapter sleeve is wanted, contact SKF for availability.
Only typical adapter sleeves are listed. Other variants can also fit the housing.

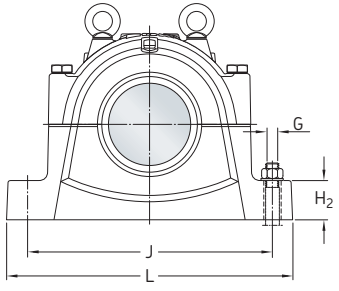

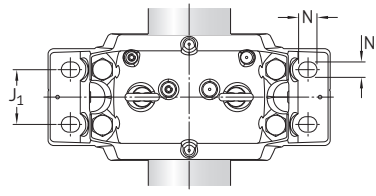

Shaft diameter	Dimensions															Eye bolt according to DIN 580	Mass Housing
d_a	A	A_1	C_a	D_a	H	H_1	H_2	J	J_1	L	N	N_1	s	G	G		
in./*mm*	mm														in.	–	kg
17 *431,8*	460	420	163	680	810	410	130	1 000	260	1 170	60	48	35	42	1 3/4	M 42	716
	460	420	224	680	810	410	130	1 000	260	1 170	60	48	35	42	1 3/4	M 42	709
	470	440	240	760	880	440	145	1 070	260	1 280	60	48	35	42	1 3/4	M 48	865
	470	440	260	760	880	440	145	1 070	260	1 280	60	48	35	42	1 3/4	M 48	859
18 *457,2*	460	420	165	700	810	410	130	1 000	260	1 170	60	48	35	42	1 3/4	M 42	716
	460	420	224	700	810	410	130	1 000	260	1 170	60	48	35	42	1 3/4	M 42	709
	470	440	248	790	920	460	155	1 110	260	1 330	70	56	35	48	2	M 48	947
	470	440	268	790	920	460	155	1 110	260	1 330	70	56	35	48	2	M 48	941
18 1/2 *469,9*	460	430	167	720	835	420	135	1 030	260	1 220	60	48	35	42	1 3/4	M 42	755
	460	430	226	720	835	420	135	1 030	260	1 220	60	48	35	42	1 3/4	M 42	751
19 1/2 *495,3*	470	440	185	780	920	460	155	1 110	260	1 330	70	56	35	48	2	M 48	947
	470	440	248	780	920	460	155	1 110	260	1 330	70	56	35	48	2	M 48	941

5.3 Large SNL plummer block housings for bearings on a cylindrical seat
d_a **130 – 170** mm

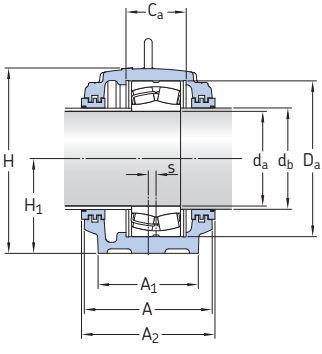

Labyrinth seals,
TS design

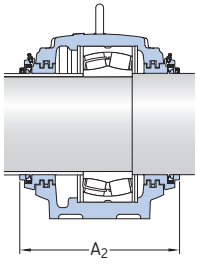

Taconite seals,
TNF design

Shaft diameter d_a	**Housing**	**Appropriate parts** Bearing[1]	Locating ring[2]	Seals	End cover	Width incl. seals A_2
mm	–	–				mm
130	**SNL 3134**	22326 CC/W33 22326-2CS5	2 FRB 7.5/280 2 FRB 7.5/280	TS 34 TNF 34	ETS 34	240 299
140	**SNL 3136**	22328 CC/W33 22328-2CS5	2 FRB 7/300 2 FRB 7/300	TS 36 TNF 36	ETS 36	250 310
150	**SNL 3138**	22330 CC/W33 22330-2CS5	2 FRB 8/320 2 FRB 8/320	TS 38 TNF 38	ETS 38	270 330
160	**SNL 3038**	22232 CC/W33 22232-2CS5 23232 CC/W33 C 3232	2 FRB 17.5/290 2 FRB 17.5/290 2 FRB 5.5/290 2 FRB 5.5/290	TS 38/180 TNF 38/180	ETS 38	250 312
	SNL 3140	22332 CC/W33 22332-2CS5	2 FRB 9/340 2 FRB 9/340	TS 40 TNF 40	ETS 40	290 347
170	**SNL 3134 G**	23134 CC/W33 23134-2CS5	2 FRB 10/280 2 FRB 10/280	TS 40 TNF 40	ETS 40	240 299
	SNL 3234 G	23234 CC/W33	2 FRB 6/310	TS 40/190 TNF 40/190	ETS 40	270 327
	SNL 3040	22234 CC/W33 22234-2CS5 C 2234	2 FRB 18/310 2 FRB 18/310 2 FRB 18/310	TS 40/190 TNF 40/190	ETS 40	270 327
	SNL 3048	22334 CC/W33	2 FRB 10/360	TS 48/190 TNF 48/190	ETS 48	300 380

[1] 222(00), 223(00), 230(00), 231(00), 232(00), 240(00) – spherical roller bearing, C... – CARB toroidal roller bearing. Only typical bearings are listed. Other bearing variants can also fit the housing.
[2] The locating rings fit the bearing in the same line only.

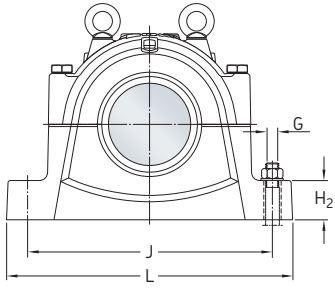

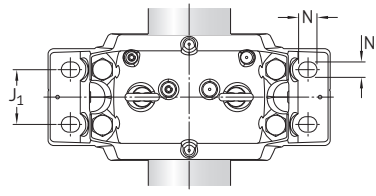

Shaft diameter	**Dimensions** Housings															**Eye bolt** according to DIN 580	**Mass** Housing
d_a	d_b	A	A_1	C_a	D_a	H	H_1	H_2	J	J_1	L	N	N_1	s	G		
mm	mm															–	kg
130	150	230	180	108	280	333	170	70	430	100	510	34	28	14	24	M 16	69,5
140	160	240	190	116	300	353	180	75	450	110	530	34	28	15	24	M 16	77,5
150	170	260	210	124	320	375	190	80	480	120	560	34	28	10	24	M 20	97,5
160	180	240	190	115	290	353	180	75	450	110	530	34	28	15	24	M 16	77,5
	180	280	230	132	340	411	210	85	510	130	610	42	35	10	30	M 20	123
170	180	230	180	108	280	333	170	70	430	100	510	34	28	14	24	M 16	69,5
	190	260	210	122	310	375	190	80	480	120	560	34	28	10	24	M 20	97,5
	190	260	210	122	310	375	190	80	480	120	560	34	28	10	24	M 20	97,5
	190	290	240	140	360	434	220	90	540	140	640	42	35	12	30	M 20	139

5.3 Large SNL plummer block housings for bearings on a cylindrical seat
d_a 180 – 190 mm

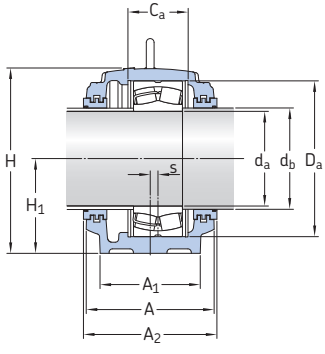

Labyrinth seals,
TS design

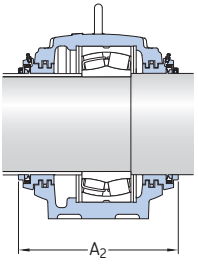

Taconite seals,
TNF design

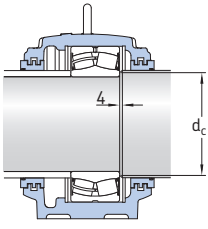

Shaft diameter d_a	Housing	Appropriate parts Bearing[1]	Locating ring[2]	Seals	End cover	Width incl. seals A_2
mm	–	–				mm
180	**SNL 3036 G**	23036 CC/W33 23036-2CS5[3] 24036 CC/W33 24036-2CS5[3] C 3036 C 4036 V C 4036-2CS5V	2 FRB 17/280 2 FRB 17/280 2 FRB 4/280 2 FRB 4/280 2 FRB 17/280 2 FRB 4/280 2 FRB 4/280	TS 44 TNF 44	ETS 44	240 301
	SNL 3136 G	23136 CC/W33 23136-2CS5 C 3136	2 FRB 10/300 2 FRB 10/300 2 FRB 10/300	TS 44 TNF 44	ETS 44	250 311
	SNL 3138 G	22236 CC/W33 22236-2CS5	2 FRB 19/320 2 FRB 19/320	TS 44 TNF 44	ETS 44	270 329
	SNL 3236 G	23236 CC/W33 C 3236	2 FRB 6/320 2 FRB 6/320	TS 44 TNF 44	ETS 44	270 329
190	**SNL 3038 G**	23038 CC/W33 24038 CC/W33 C 3038 C 4038 C 4038-2CS5V	4 FRB 10/290 2 FRB 7.5/290 4 FRB 10/290 2 FRB 7.5/290 2 FRB 7.5/290	TS 44 TNF 44	ETS 44	250 311
	SNL 3138 G	23138 CC/W33 23138-2CS5 C 3138	2 FRB 10/320 2 FRB 10/320 2 FRB 10/320	TS 44 TNF 44	ETS 44	270 329
	SNL 3238 G	23238 CC/W33	2 FRB 6/340	TS 48/210 TNF 48/210	ETS 48	290 372
	SNL 3140 G	22238 CC/W33 22238-2CS5 C 2238	4 FRB 10/340 4 FRB 10/340 4 FRB 10/340	TS 48/210 TNF 48/210	ETS 48	290 372
	SNL 3148	22338 CC/W33	2 FRB 8/400	TS 48/210 TNF 48/210	ETS 48	315 396

[1] 222(00), 223(00), 230(00), 231(00), 232(00), 240(00) – spherical roller bearing, C... – CARB toroidal roller bearing. Only typical bearings are listed. Other bearing variants can also fit the housing.
[2] The locating rings fit the bearing in the same line only.
[3] The shaft must be modified according to the d_c value for the bearing.

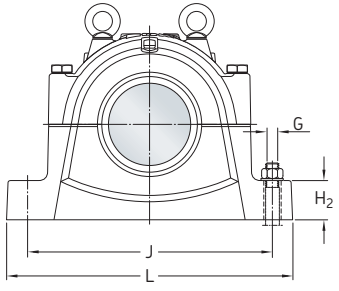

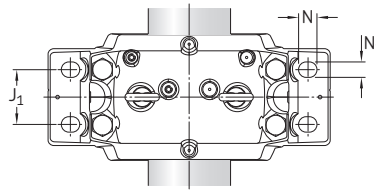

Shaft diameter				**Dimensions** Housings														**Eye bolt** according to DIN 580	**Mass** Housing
d_a	d_b	d_c min	d_c max	A	A_1	C_a	D_a	H	H_1	H_2	J	J_1	L	N	N_1	s	G		
mm				mm														–	kg
180	200	191	199	230	180	108	280	333	170	70	430	100	510	34	28	14	24	M 16	69,5
		191	194																
	200	–	–	240	190	116	300	353	180	75	450	110	530	34	28	15	24	M 16	77,5
	200	–	–	260	210	124	320	375	190	80	480	120	560	34	28	10	24	M 20	97,5
	200	–	–	260	210	124	320	375	190	80	480	120	560	34	28	10	24	M 20	97,5
190	200	–	–	240	190	115	290	353	180	75	450	110	530	34	28	15	24	M 16	77,5
	200	–	–	260	210	124	320	375	190	80	480	120	560	34	28	10	24	M 20	97,5
	210	–	–	280	230	132	340	411	210	85	510	130	610	42	35	10	30	M 20	123
	210	–	–	280	230	132	340	411	210	85	510	130	610	42	35	10	30	M 20	123
	210	–	–	310	260	148	400	474	240	95	600	150	700	42	35	12	30	M 24	187

5.3 Large SNL plummer block housings for bearings on a cylindrical seat
d_a **200** mm

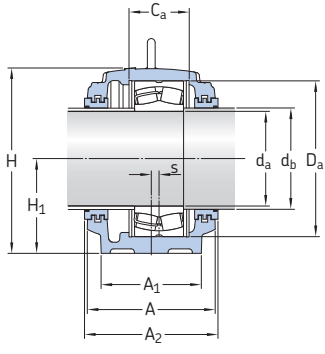

Labyrinth seals,
TS design

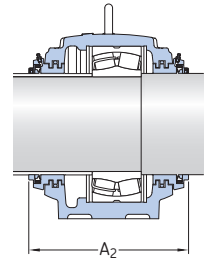

Taconite seals,
TNF design

Shaft diameter d_a	**Housing**	**Appropriate parts** Bearing[1]	Locating ring[2]	Seals	End cover	Width incl. seals A_2
mm	–	–				mm
200	**SNL 3040 G**	23040 CC/W33 23040-2CS5 24040 CC/W33 C 3040 C 4040 V C 4040-2CS5V	4 FRB 10/310 4 FRB 10/310 2 FRB 6.5/310 4 FRB 10/310 2 FRB 6.5/310 2 FRB 6.5/310	TS 48 TNF 48	ETS 48	270 352
	SNL 3140 G	23140 CC/W33 23140-2CS5 C 3140	2 FRB 10/340 2 FRB 10/340 2 FRB 10/340	TS 48 TNF 48	ETS 48	290 372
	SNL 3240 G	23240 CC/W33 23240-2CS5	2 FRB 6/360 2 FRB 6/360	TS 48 TNF 48	ETS 48	300 380
	SNL 3048	22240 CC/W33 22240-2CS5	2 FRB 21/360 2 FRB 21/360	TS 48 TNF 48	ETS 48	300 380
	SNL 3056	22340 CC/W33	2 FRB 14/420	TS 56/220 TNF 56/220	ETS 56	330 404

[1] 222(00), 223(00), 230(00), 231(00), 232(00), 240(00) – spherical roller bearing, C... – CARB toroidal roller bearing. Only typical bearings are listed. Other bearing variants can also fit the housing.
[2] The locating rings fit the bearing in the same line only.

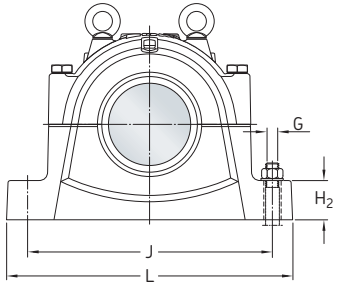

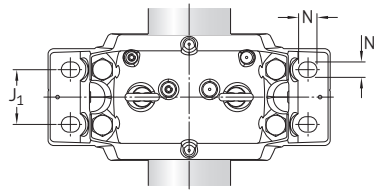

Shaft diameter	**Dimensions** Housings															**Eye bolt** according to DIN 580	**Mass** Housing
d_a	d_b	A	A_1	C_a	D_a	H	H_1	H_2	J	J_1	L	N	N_1	s	G		
mm	mm															–	kg
200	220	260	210	122	310	375	190	80	480	120	560	34	28	10	24	M 20	97,5
	220	280	230	132	340	411	210	85	510	130	610	42	35	10	30	M 20	123
	220	290	240	140	360	434	220	90	540	140	640	42	35	12	30	M 20	139
	220	290	240	140	360	434	220	90	540	140	640	42	35	12	30	M 20	139
	220	320	280	166	420	516	260	100	650	160	770	50	42	13	36	M 24	221

5.3 Large SNL plummer block housings for bearings on a cylindrical seat
d_a **220** mm

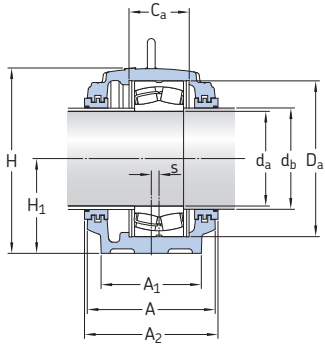

Labyrinth seals,
TS design

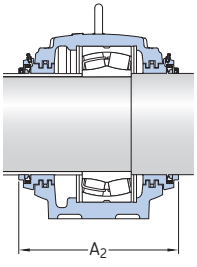

Taconite seals,
TNF design

Shaft diameter d_a	**Housing**	**Appropriate parts** Bearing[1]	Locating ring[2]	Seals	End cover	Width incl. seals A_2
mm	–	–				mm
220	**SNL 3044 G**	23044 CC/W33 23044-2CS5 24044 CC/W33 C 3044 C 4044 V	4 FRB 10/340 4 FRB 10/340 2 FRB 6/340 4 FRB 10/340 2 FRB 6/340	TS 52 TNF 52	ETS 52	290 364
	SNL 3144 G	23144 CC/W33 23144-2CS5 C 3144	2 FRB 10/370 2 FRB 10/370 2 FRB 10/370	TS 52 TNF 52	ETS 52	300 372
	SNL 3244 G	23244 CC/W33	2 FRB 10/400	TS 56/240 TNF 56/240	ETS 56	315 386
	SNL 3148 G	22244 CC/W33 22244-2CS5 C 2244	4 FRB 10/400 4 FRB 10/400 4 FRB 10/400	TS 56/240 TNF 56/240	ETS 56	315 386
	SNL 3156	22344 CC/W33	2 FRB 10.5/460	TS 56/240 TNF 56/240	ETS 56	330 404

[1] 222(00), 223(00), 230(00), 231(00), 232(00), 240(00) – spherical roller bearing, C... – CARB toroidal roller bearing. Only typical bearings are listed. Other bearing variants can also fit the housing.
[2] The locating rings fit the bearing in the same line only.

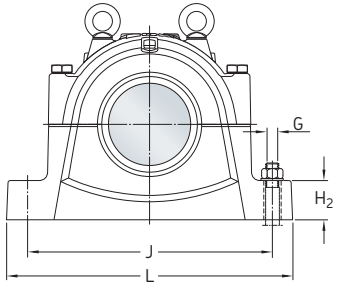

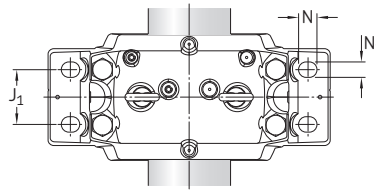

Shaft diameter	**Dimensions** Housings															**Eye bolt** according to DIN 580	**Mass** Housing
d_a	d_b	A	A_1	C_a	D_a	H	H_1	H_2	J	J_1	L	N	N_1	s	G		
mm	mm															–	kg
220	240	280	230	130	340	411	210	85	510	130	610	42	35	10	30	M 20	123
	240	290	240	140	370	434	220	90	540	140	640	42	35	12	30	M 20	138
	240	310	260	164	400	474	240	95	600	150	700	42	35	12	30	M 24	187
	240	310	260	148	400	474	240	95	600	150	700	42	35	12	30	M 24	187
	240	320	280	166	460	550	280	105	670	160	790	50	42	16	36	M 24	252

5.3 Large SNL plummer block housings for bearings on a cylindrical seat
d_a 240 – 260 mm

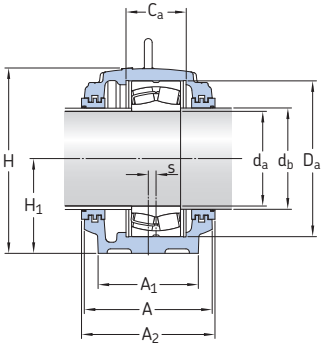

Labyrinth seals, TS design

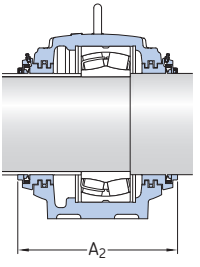

Taconite seals, TNF design

Shaft diameter d_a	Housing	Appropriate parts Bearing[1]	Locating ring[2]	Seals	End cover	Width incl. seals A_2
mm	–	–				mm
240	**SNL 3048 G**	23048 CC/W33 23048-2CS5 24048 CC/W33 C 3048	4 FRB 12/360 4 FRB 12/360 2 FRB 11/360 4 FRB 12/360	TS 56 TNF 56	ETS 56	300 370
	SNL 3148 G	23148 CC/W33 23148-2CS5 C 3148	2 FRB 10/400 2 FRB 10/400 2 FRB 10/400	TS 56 TNF 56	ETS 56	315 386
	SNL 3248 G	23248 CC/W33	2 FRB 10/440	TS 60/260 TNF 60/260	ETS 60	330 404
	SNL 3152 G	22248 CC/W33	2 FRB 22/440	TS 60/260 TNF 60/260	ETS 60	330 412
	SNL 3160	22348 CC/W33	2 FRB 12.5/500	TS 60/260 TNF 60/260	ETS 60	360 434
260	**SNL 3052 G**	23052 CC/W33 23052-2CS5 24052 CC/W33 C 3052	2 FRB 22/400 2 FRB 22/400 2 FRB 4/400 2 FRB 22/400	TS 60 TNF 60	ETS 60	315 394
	SNL 3152	23152 CC/W33 23152-2CS5 C 3152	2 FRB 10/440 2 FRB 10/440 2 FRB 10/440	TS 60 TNF 60	ETS 60	330 412
	SNL 3252 G	23252 CC/W33	2 FRB 10/480	TS 64/280 TNF 64/280	ETS 64	360 434
	SNL 3064	22252 CC/W33	2 FRB 25.5/480	TS 64/280 TNF 64/280	ETS 64	360 434
	SNL 3164	22352 CC/W33	2 FRB 15.5/540	TS 64/290 TNF 64/290	ETS 64	380 454

[1] 222(00), 223(00), 230(00), 231(00), 232(00), 240(00) – spherical roller bearing, C... – CARB toroidal roller bearing. Only typical bearings are listed. Other bearing variants can also fit the housing.
[2] The locating rings fit the bearing in the same line only.

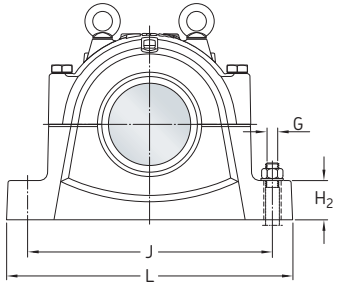

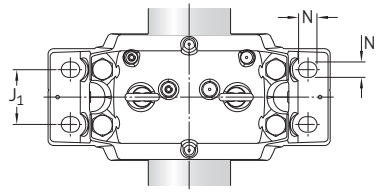

Shaft diameter	**Dimensions** Housings															**Eye bolt** according to DIN 580	**Mass** Housing
d_a	d_b	A	A_1	C_a	D_a	H	H_1	H_2	J	J_1	L	N	N_1	s	G		
mm	mm															–	kg
240	260	290	240	140	360	434	220	90	540	140	640	42	35	12	30	M 20	139
	260	310	260	148	400	474	240	95	600	150	700	42	35	12	30	M 24	187
	260	320	280	180	440	516	260	100	650	160	770	50	42	13	36	M 24	221
	260	320	280	164	440	516	260	100	650	160	770	50	42	13	36	M 24	221
	260	350	310	180	500	591	300	110	710	190	830	50	42	22	36	M 30	301
260	280	310	260	148	400	474	240	95	600	150	700	42	35	12	30	M 24	187
	280	320	280	164	440	516	260	100	650	160	770	50	42	13	36	M 24	221
	280	350	310	194	480	591	300	110	710	190	830	50	42	22	36	M 30	301
	280	350	310	181	480	591	300	110	710	190	830	50	42	22	36	M 30	301
	290	370	330	196	540	631	320	115	750	200	880	50	42	23	36	M 30	339

5.3 Large SNL plummer block housings for bearings on a cylindrical seat
d_a **280 – 300** mm

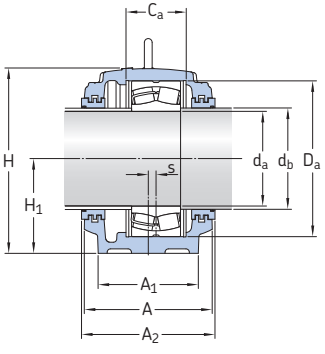

Labyrinth seals,
TS design

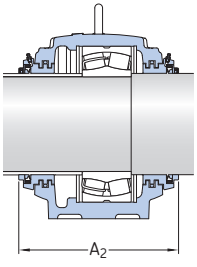

Taconite seals,
TNF design

Shaft diameter d_a	**Housing**	**Appropriate parts** Bearing[1]	Locating ring[2]	Seals	End cover	Width incl. seals A_2
mm	–	–				mm
280	**SNL 3056 G**	23056 CC/W33 24056 CC/W33 C 3056	6 FRB 10/420 2 FRB 13/420 6 FRB 10/420	TS 64 TNF 64	ETS 64	330 404
	SNL 3156 G	23156 CC/W33 23156-2CS5 C 3156	2 FRB 10/460 2 FRB 10/460 2 FRB 10/460	TS 64 TNF 64	ETS 64	330 404
	SNL 3256 G	23256 CC/W33	2 FRB 10/500	TS 68/300 TNF 68/300	ETS 68	360 433
	SNL 3160 G	22256 CC/W33	2 FRB 25/500	TS 68/300 TNF 68/300	ETS 68	360 433
	SNL 3168 L	22356 CC/W33	2 FRB 17.5/580	TS 68/310 TNF 68/310	ETS 68	410 483
300	**SNL 3060 G**	23060 CC/W33 24060 CC/W33 C 3060 M C 4060 M	2 FRB 25/460 2 FRB 4/460 2 FRB 25/460 2 FRB 4/460	TS 68 TNF 68	ETS 68	330 403
	SNL 3160 G	23160 CC/W33 23160-2CS5 C 3160	2 FRB 10/500 2 FRB 10/500 2 FRB 10/500	TS 68 TNF 68	ETS 68	360 433
	SNL 3260 G	23260 CC/W33	2 FRB 10/540	TS 72/320 TNF 72/320	ETS 72	380 453
	SNL 3164 G	22260 CC/W33	2 FRB 28/540	TS 72/320 TNF 72/320	ETS 72	380 453

[1] 222(00), 223(00), 230(00), 231(00), 232(00), 240(00) – spherical roller bearing, C... – CARB toroidal roller bearing. Only typical bearings are listed. Other bearing variants can also fit the housing.
[2] The locating rings fit the bearing in the same line only.

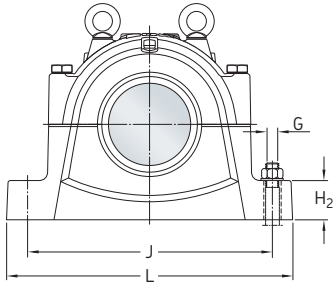

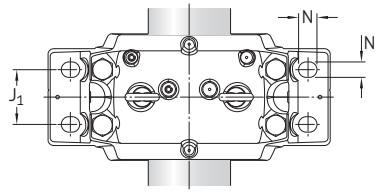

Shaft diameter	**Dimensions** Housings															**Eye bolt** according to DIN 580	**Mass** Housing
d_a	d_b	A	A_1	C_a	D_a	H	H_1	H_2	J	J_1	L	N	N_1	s	G		
mm	mm															–	kg
280	300	320	280	166	420	516	260	100	650	160	770	50	42	13	36	M 24	221
	300	320	280	166	460	550	280	105	670	160	790	50	42	16	36	M 24	252
	300	350	310	196	500	591	300	110	710	190	830	50	42	22	36	M 30	301
	300	350	310	180	500	591	300	110	710	190	830	50	42	22	36	M 30	301
	310	400	360	210	580	675	340	120	810	220	950	50	42	24	36	M 30	427
300	320	320	280	168	460	550	280	105	670	160	790	50	42	16	36	M 24	252
	320	350	310	180	500	591	300	110	710	190	830	50	42	22	36	M 30	301
	320	370	330	212	540	631	320	115	750	200	880	50	42	23	36	M 30	339
	320	370	330	196	540	631	320	115	750	200	880	50	42	23	36	M 30	339

5.3 Large SNL plummer block housings for bearings on a cylindrical seat
d_a 320 – 340 mm

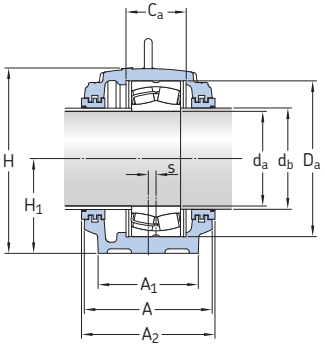

Labyrinth seals,
TS design

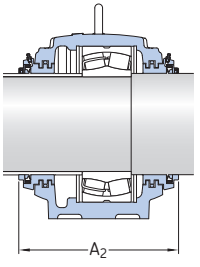

Taconite seals,
TNF design

Shaft diameter d_a	Housing	Appropriate parts Bearing[1]	Locating ring[2]	Seals	End cover	Width incl. seals A_2
mm	–	–				mm
320	**SNL 3064 G**	23064 CC/W33 24064 CC/W33 C 3064 M	6 FRB 10/480 2 FRB 10.5/480 6 FRB 10/480	TS 72 TNF 72	ETS 72	360 433
	SNL 3164 G	23164 CC/W33 23164-2CS5 C 3164 M	2 FRB 10/540 2 FRB 10/540 2 FRB 10/540	TS 72 TNF 72	ETS 72	380 453
	SNL 3264 GF	23264 CC/W33	–	TS 76/340 TNF 76/340	ETS 76	410 483
	SNL 3264 GL	23264 CC/W33	–	TS 76/340 TNF 76/340	ETS 76	410 483
	SNL 3168 GF	22264 CC/W33	2 FRB 20/580	TS 76/340 TNF 76/340	ETS 76	410 483
340	**SNL 3068 G**	23068 CC/W33 24068 CC/W33 C 3068 M	4 FRB 16/520 2 FRB 8.5/520 4 FRB 16/520	TS 76 TNF 76	ETS 76	380 453
	SNL 3168 GF	23168 CC/W33 23168-2CS5 C 3168 M	– – –	TS 76 TNF 76	ETS 76	410 483
	SNL 3168 GL	23168 CC/W33 23168-2CS5	– –	TS 76 TNF 76	ETS 76	410 483
	SNL 3268 GF	23268 CA/W33	–	TS 76/370 TNF 76/370	ETS 76	410 483
	SNL 3268 GL	23268 CA/W33	–	TS 76/370 TNF 76/370	ETS 76	410 483

[1] 222(00), 223(00), 230(00), 231(00), 232(00), 240(00) – spherical roller bearing, C... – CARB toroidal roller bearing. Only typical bearings are listed. Other bearing variants can also fit the housing.
[2] The locating rings fit the bearing in the same line only.

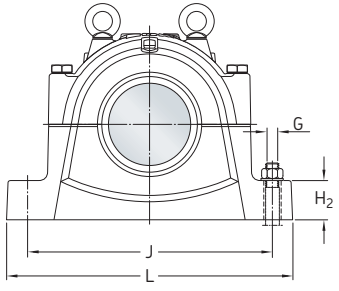

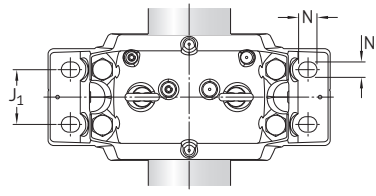

Shaft diameter	**Dimensions** Housings															**Eye bolt** according to DIN 580	**Mass** Housing
d_a	d_b	A	A_1	C_a	D_a	H	H_1	H_2	J	J_1	L	N	N_1	s	G		
mm	mm															–	kg
320	340	350	310	181	480	591	300	110	710	190	830	50	42	22	36	M 30	301
	340	370	330	196	540	631	320	115	750	200	880	50	42	23	36	M 30	339
	340	400	360	208	580	675	340	120	810	220	950	50	42	24	36	M 30	430
	340	400	360	228	580	675	340	120	810	220	950	50	42	24	36	M 30	427
	340	400	360	190	580	675	340	120	810	220	950	50	42	24	36	M 30	430
340	360	370	330	197	520	631	320	115	750	200	880	50	42	23	36	M 30	339
	360	400	360	190	580	675	340	120	810	220	950	50	42	24	36	M 30	430
	360	400	360	210	580	675	340	120	810	220	950	50	42	24	36	M 30	427
	370	400	360	224	620	715	360	120	870	220	1 040	50	42	30	36	M 36	473
	370	400	360	244	620	715	360	120	870	220	1 040	50	42	30	36	M 36	470

5.3 Large SNL plummer block housings for bearings on a cylindrical seat
d_a **360** mm

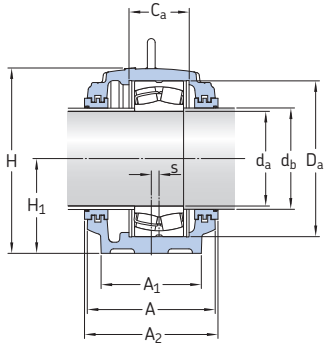

Labyrinth seals,
TS design

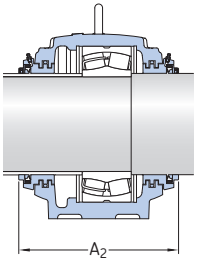

Taconite seals,
TNF design

Shaft diameter d_a	**Housing**	**Appropriate parts** Bearing[1]	Locating ring[2]	Seals	End cover	Width incl. seals A_2
mm	–	–				mm
360	**SNL 3072 G**	23072 CC/W33 24072 CC/W33 C 3072 M	4 FRB 16/540 2 FRB 9/540 4 FRB 16/540	TS 80 TNF 80	ETS 80	380 453
	SNL 3172 GF	23172 CC/W33 23172-2CS5 C 3172 M	– – –	TS 80 TNF 80	ETS 80	410 483
	SNL 3172 GL	23172 CC/W33 23172-2CS5	– –	TS 80 TNF 80	ETS 80	410 483
	SNL 3272 GF	23272 CA/W33	–	TS 80/390 TNF 80/390	ETS 80	440 513
	SNL 3272 GL	23272 CA/W33	–	TS 80/390 TNF 80/390	ETS 80	440 513
	SNL 3180 L	22272 CA/W33	2 FRB 25/650	TS 80/390 TNF 80/390	ETS 80	440 513

[1] 222(00), 223(00), 230(00), 231(00), 232(00), 240(00) – spherical roller bearing, C... – CARB toroidal roller bearing. Only typical bearings are listed. Other bearing variants can also fit the housing.
[2] The locating rings fit the bearing in the same line only.

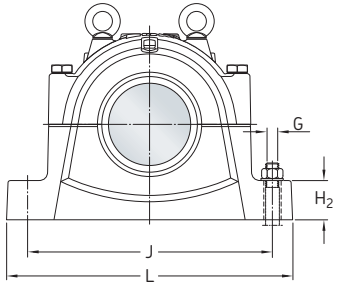

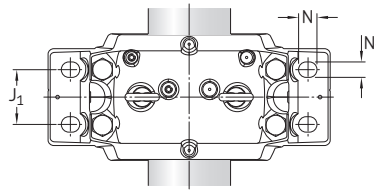

Shaft diameter	**Dimensions** Housings															**Eye bolt** according to DIN 580	**Mass** Housing
d_a	d_b	A	A_1	C_a	D_a	H	H_1	H_2	J	J_1	L	N	N_1	s	G		
mm	mm															–	kg
360	380	370	330	198	540	631	320	115	750	200	880	50	42	23	36	M 30	339
	380	400	360	192	600	695	350	120	840	220	1 000	50	42	30	36	M 36	458
	380	400	360	212	600	695	350	120	840	220	1 000	50	42	30	36	M 36	454
	390	430	390	232	650	755	380	125	950	240	1 120	60	48	30	42	M 42	595
	390	430	390	252	650	755	380	125	950	240	1 120	60	48	30	42	M 42	595
	390	430	390	220	650	755	380	125	950	240	1 120	60	48	30	42	M 42	595

5.3 Large SNL plummer block housings for bearings on a cylindrical seat
d_a **380** mm

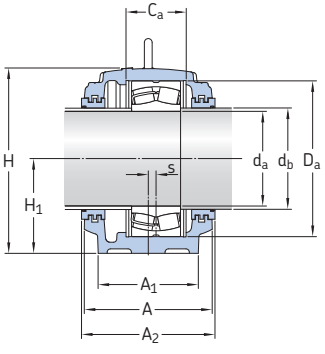

Labyrinth seals,
TS design

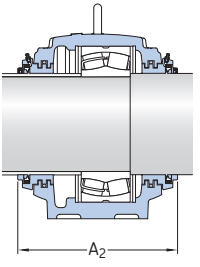

Taconite seals,
TNF design

Shaft diameter d_a	**Housing**	**Appropriate parts** Bearing[1)]	Seals	End cover	Width incl. seals A_2
mm	–	–			mm
380	**SNL 3076 GF**	23076 CC/W33 C 3076 M	TS 84 TNF 84	ETS 84	410 483
	SNL 3076 GL	23076 CC/W33	TS 84 TNF 84	ETS 84	410 483
	SNL 3176 GF	23176 CA/W33	TS 84 TNF 84	ETS 84	410 483
	SNL 3176 GL	23176 CA/W33	TS 84 TNF 84	ETS 84	410 483
	SNL 3276 GF	23276 CA/W33	TS 92/410 TNF 92/410	ETS 92	470 543
	SNL 3276 GL	23276 CA/W33	TS 92/410 TNF 92/410	ETS 92	470 543
	SNL 4076 GF	24076 CC/W33	TS 84 TNF 84	ETS 84	410 483
	SNL 4076 GL	24076 CC/W33	TS 84 TNF 84	ETS 84	410 483

1) 222(00), 223(00), 230(00), 231(00), 232(00), 240(00) – spherical roller bearing, C... – CARB toroidal roller bearing.
Only typical bearings are listed. Other bearing variants can also fit the housing.

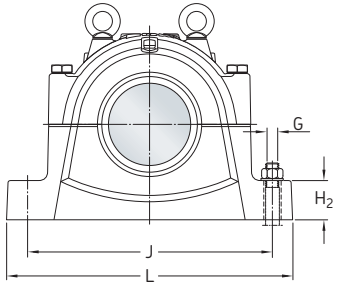

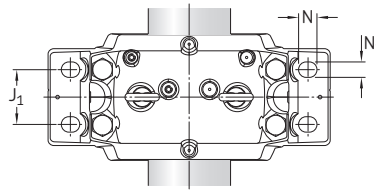

Shaft diameter	**Dimensions** Housings															**Eye bolt** according to DIN 580	**Mass** Housing
d_a	d_b	A	A_1	C_a	D_a	H	H_1	H_2	J	J_1	L	N	N_1	s	G		
mm	mm															–	kg
380	400	400	360	135	560	675	340	120	810	220	950	50	42	24	36	M 30	430
	400	400	360	180	560	675	340	120	810	220	950	50	42	24	36	M 30	427
	400	400	360	194	620	715	360	120	870	220	1 040	50	42	30	36	M 36	473
	400	400	360	214	620	715	360	120	870	220	1 040	50	42	30	36	M 36	470
	410	460	420	240	680	810	410	130	1 000	260	1 170	60	48	35	42	M 42	716
	410	460	420	260	680	810	410	130	1 000	260	1 170	60	48	35	42	M 42	709
	400	400	360	180	560	675	340	120	810	220	950	50	42	24	36	M 30	430
	400	400	360	200	560	675	340	120	810	220	950	50	42	24	36	M 30	427

5.3 Large SNL plummer block housings for bearings on a cylindrical seat
d_a **400** mm

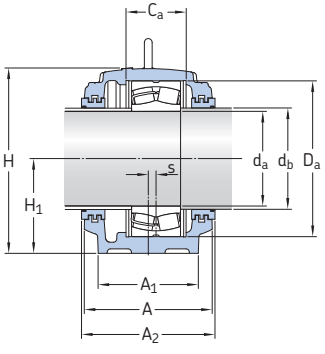

Labyrinth seals,
TS design

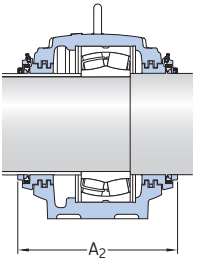

Taconite seals,
TNF design

Shaft diameter d_a	**Housing**	**Appropriate parts** Bearing[1)]	Seals	End cover	Width incl. seals A_2
mm	–	–			mm
400	**SNL 3080 GF**	23080 CC/W33 C 3080 M	TS 92 TNF 92	ETS 92	410 483
	SNL 3080 GL	23080 CC/W33	TS 92 TNF 92	ETS 92	410 483
	SNL 3180 GF	23180 CA/W33 23180-2CS5 C 3180 M	TS 92 TNF 92	ETS 92	440 513
	SNL 3180 GL	23180 CA/W33 23180-2CS5	TS 92 TNF 92	ETS 92	440 513
	SNL 3280 GF	23280 CA/W33	TS 500/430 TNF 500/430	ETS 500	470 543
	SNL 3280 GL	23280 CA/W33	TS 500/430 TNF 500/430	ETS 500	470 543
	SNL 4080 GF	24080 ECCJ/W33	TS 92 TNF 92	ETS 92	410 483
	SNL 4080 GL	24080 ECCJ/W33	TS 92 TNF 92	ETS 92	410 483

[1)] 222(00), 223(00), 230(00), 231(00), 232(00), 240(00) – spherical roller bearing, C... – CARB toroidal roller bearing.
Only typical bearings are listed. Other bearing variants can also fit the housing.

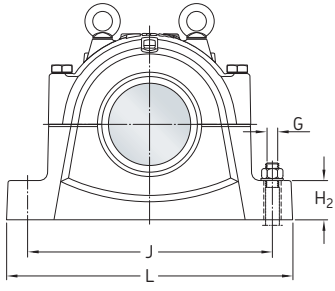

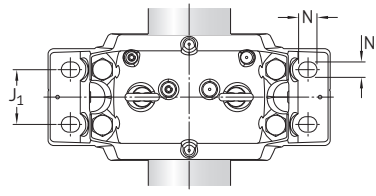

Shaft diameter	**Dimensions** Housings															**Eye bolt** according to DIN 580	**Mass** Housing
d_a	d_b	A	A_1	C_a	D_a	H	H_1	H_2	J	J_1	L	N	N_1	s	G		
mm	mm															–	kg
400	430	400	360	148	600	695	350	120	840	220	1 000	50	42	30	36	M 36	458
	430	400	360	192	600	695	350	120	840	220	1 000	50	42	30	36	M 36	454
	430	430	390	200	650	755	380	125	950	240	1 120	60	48	30	42	M 42	595
	430	430	390	220	650	755	380	125	950	240	1 120	60	48	30	42	M 42	595
	430	460	430	256	720	835	420	135	1 030	260	1 220	60	48	35	42	M 42	745
	430	460	430	276	720	835	420	135	1 030	260	1 220	60	48	35	42	M 42	740
	430	400	360	200	600	695	350	120	840	220	1 000	50	42	30	36	M 36	458
	430	400	360	220	600	695	350	120	840	220	1 000	50	42	30	36	M 36	454

5.3 Large SNL plummer block housings for bearings on a cylindrical seat
d_a **420** mm

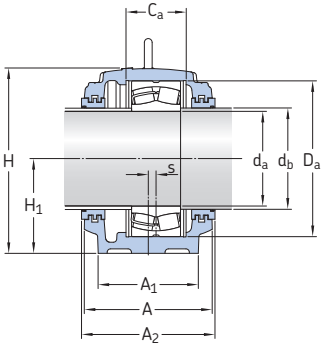

Labyrinth seals,
TS design

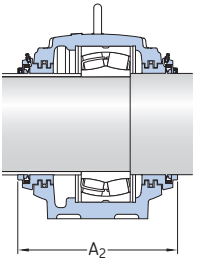

Taconite seals,
TNF design

Shaft diameter d_a	**Housing**	**Appropriate parts** Bearing[1)]	Seals	End cover	Width incl. seals A_2
mm	–	–			mm
420	**SNL 3084 GF**	23084 CA/W33 C 3084 M	TS 96 TNF 96	ETS 96	410 483
	SNL 3084 GL	23084 CA/W33	TS 96 TNF 96	ETS 96	410 483
	SNL 3184 GF	23184 CJ/W33 C 3184 M	TS 96 TNF 96	ETS 96	470 543
	SNL 3184 GL	23184 CJ/W33	TS 96 TNF 96	ETS 96	470 543
	SNL 3284 GF	23284 CA/W33	TS 530/460 TNF 530/460	ETS 530	480 553
	SNL 3284 GL	23284 CA/W33	TS 530/460 TNF 530/460	ETS 530	480 553
	SNL 4084 GF	24084 ECA/W33	TS 96 TNF 96	ETS 96	410 483
	SNL 4084 GL	24084 ECA/W33	TS 96 TNF 96	ETS 96	410 483

1) 222(00), 223(00), 230(00), 231(00), 232(00), 240(00) – spherical roller bearing, C... – CARB toroidal roller bearing.
Only typical bearings are listed. Other bearing variants can also fit the housing.

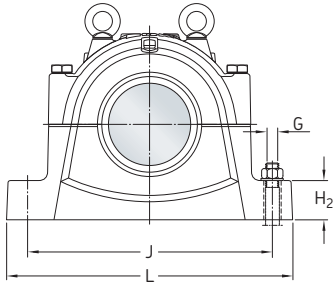

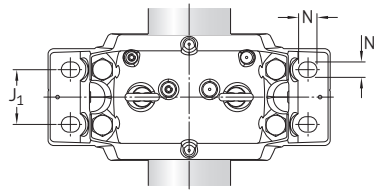

Shaft diameter	**Dimensions** Housings															**Eye bolt** according to DIN 580	**Mass** Housing
d_a	d_b	A	A_1	C_a	D_a	H	H_1	H_2	J	J_1	L	N	N_1	s	G		
mm	mm															–	kg
420	450	400	360	150	620	715	360	120	870	220	1 040	50	42	30	36	M 36	473
	450	400	360	194	620	715	360	120	870	220	1 040	50	42	30	36	M 36	470
	450	460	420	224	700	810	410	130	1 000	260	1 170	60	48	35	42	M 42	716
	450	460	420	244	700	810	410	130	1 000	260	1 170	60	48	35	42	M 42	709
	460	470	440	272	760	880	440	145	1 070	260	1 280	60	48	40	42	M 48	865
	460	470	440	292	760	880	440	145	1 070	260	1 280	60	48	40	42	M 48	859
	450	400	360	200	620	715	360	120	870	220	1 040	50	42	30	36	M 36	473
	450	400	360	220	620	715	360	120	870	220	1 040	50	42	30	36	M 36	470

5.3 Large SNL plummer block housings for bearings on a cylindrical seat
d_a **440** mm

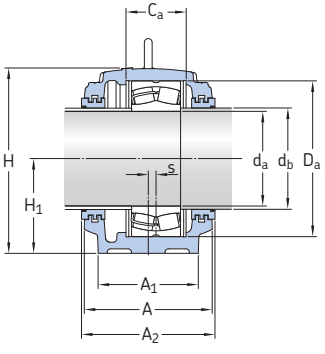

Labyrinth seals,
TS design

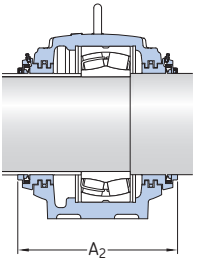

Taconite seals,
TNF design

Shaft diameter d_a	**Housing**	**Appropriate parts** Bearing[1)]	Seals	End cover	Width incl. seals A_2
mm	–	–			mm
440	**SNL 3088 GF**	23088 CA/W33 C 3088 MB	TS 500 TNF 500	ETS 500	440 513
	SNL 3088 GL	23088 CA/W33	TS 500 TNF 500	ETS 500	440 513
	SNL 3188 GF	23188 CA/W33	TS 500 TNF 500	ETS 500	470 543
	SNL 3188 GL	23188 CA/W33	TS 500 TNF 500	ETS 500	470 543
	SNL 3288 GF	23288 CA/W33	TS 560/480 TNF 560/480	ETS 560	480 553
	SNL 3288 GL	23288 CA/W33	TS 560/480 TNF 560/480	ETS 560	480 553
	SNL 4088 GF	24088 ECA/W33	TS 500 TNF 500	ETS 500	440 513
	SNL 4088 GL	24088 ECA/W33	TS 500 TNF 500	ETS 500	440 513

1) 222(00), 223(00), 230(00), 231(00), 232(00), 240(00) – spherical roller bearing, C... – CARB toroidal roller bearing.
Only typical bearings are listed. Other bearing variants can also fit the housing.

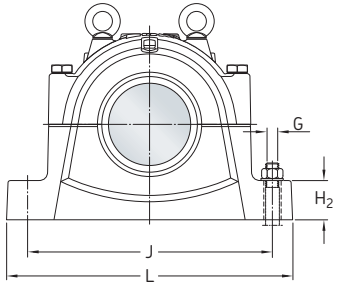

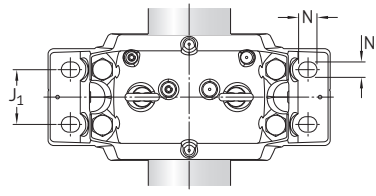

Shaft diameter	**Dimensions** Housings															**Eye bolt** according to DIN 580	**Mass** Housing
d_a	d_b	A	A_1	C_a	D_a	H	H_1	H_2	J	J_1	L	N	N_1	s	G		
mm	mm															–	kg
440	470	430	390	157	650	755	380	125	950	240	1 120	60	48	30	42	M 42	595
	470	430	390	200	650	755	380	125	950	240	1 120	60	48	30	42	M 42	595
	470	460	430	226	720	835	420	135	1 030	260	1 220	60	48	35	42	M 42	755
	470	460	430	246	720	835	420	135	1 030	260	1 220	60	48	35	42	M 42	751
	480	470	440	280	790	920	460	155	1 110	260	1 330	70	56	40	48	M 48	947
	480	470	440	300	790	920	460	155	1 110	260	1 330	70	56	40	48	M 48	941
	470	430	390	212	650	755	380	125	950	240	1 120	60	48	30	42	M 42	595
	470	430	390	232	650	755	380	125	950	240	1 120	60	48	30	42	M 42	595

5.3 Large SNL plummer block housings for bearings on a cylindrical seat
d_a **460 – 480** mm

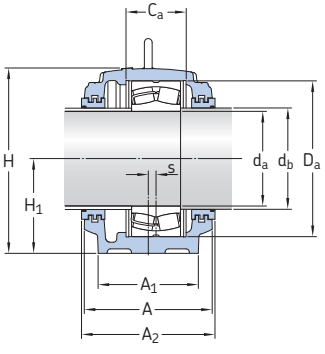

Labyrinth seals,
TS design

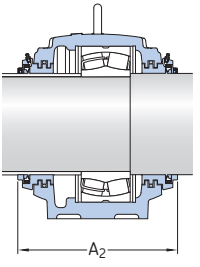

Taconite seals,
TNF design

Shaft diameter d_a	**Housing**	**Appropriate parts** Bearing[1]	Seals	End cover	Width incl. seals A_2
mm	–	–			mm
460	**SNL 3092 GF**	23092 CA/W33 C 3092 M	TS 530 TNF 530	ETS 530	470 543
	SNL 3092 GL	23092 CA/W33	TS 530 TNF 530	ETS 530	470 543
	SNL 3192 GF	23192 CA/W33 C 3192 M	TS 530 TNF 530	ETS 530	480 553
	SNL 3192 GL	23192 CA/W33	TS 530 TNF 530	ETS 530	480 553
	SNL 4092 GF	24092 ECA/W33	TS 530 TNF 530	ETS 530	470 543
	SNL 4092 GL	24092 ECA/W33	TS 530 TNF 530	ETS 530	470 543
480	**SNL 3096 GF**	23096 CA/W33 C 3096 M	TS 530/510 TNF 530/510	ETS 530	470 543
	SNL 3096 GL	23096 CA/W33	TS 530/510 TNF 530/510	ETS 530	470 543
	SNL 3196 GF	23196 CA/W33	TS 560/520 TNF 560/520	ETS 560	480 553
	SNL 3196 GL	23196 CA/W33	TS 560/520 TNF 560/520	ETS 560	480 553
	SNL 4096 GF	24096 ECA/W33	TS 530/510 TNF 530/510	ETS 530	470 543
	SNL 4096 GL	24096 ECA/W33	TS 530/510 TNF 530/510	ETS 530	470 543

[1] 222(00), 223(00), 230(00), 231(00), 232(00), 240(00) – spherical roller bearing, C... – CARB toroidal roller bearing.
Only typical bearings are listed. Other bearing variants can also fit the housing.

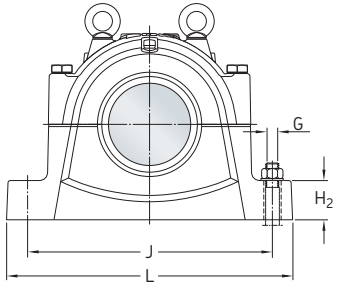

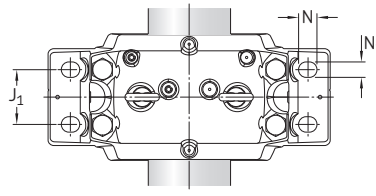

Shaft diameter	**Dimensions** Housings															**Eye bolt** according to DIN 580	**Mass** Housing
d_a	d_b	A	A_1	C_a	D_a	H	H_1	H_2	J	J_1	L	N	N_1	s	G		
mm	mm															–	kg
460	500	460	420	163	680	810	410	130	1 000	260	1 170	60	48	35	42	M 42	716
	500	460	420	224	680	810	410	130	1 000	260	1 170	60	48	35	42	M 42	709
	500	470	440	240	760	880	440	145	1 070	260	1 280	60	48	35	42	M 48	865
	500	470	440	260	760	880	440	145	1 070	260	1 280	60	48	35	42	M 48	859
	500	460	420	218	680	810	410	130	1 000	260	1 170	60	48	35	42	M 42	716
	500	460	420	238	680	810	410	130	1 000	260	1 170	60	48	35	42	M 42	709
480	510	460	420	165	700	810	410	130	1 000	260	1 170	60	48	35	42	M 42	716
	510	460	420	224	700	810	410	130	1 000	260	1 170	60	48	35	42	M 42	709
	520	470	440	248	790	920	460	155	1 110	260	1 330	70	56	35	48	M 48	947
	520	470	440	268	790	920	460	155	1 110	260	1 330	70	56	35	48	M 48	941
	510	460	420	218	700	810	410	130	1 000	260	1 170	60	48	35	42	M 42	716
	510	460	420	238	700	810	410	130	1 000	260	1 170	60	48	35	42	M 42	709

5.3 Large SNL plummer block housings for bearings on a cylindrical seat
d_a **500 – 530** mm

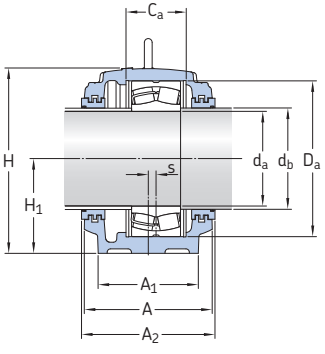

Labyrinth seals,
TS design

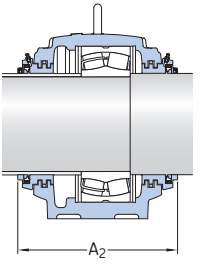

Taconite seals,
TNF design

Shaft diameter d_a	**Housing**	**Appropriate parts** Bearing[1)]	Seals	End cover	Width incl. seals A_2
mm	–	–			mm
500	**SNL 30/500 GF**	230/500 CA/W33 C 30/500 M	TS 560 TNF 560	ETS 560	470 543
	SNL 30/500 GL	230/500 CA/W33	TS 560 TNF 560	ETS 560	470 543
	SNL 40/500 GF	240/500 ECA/W33	TS 560 TNF 560	ETS 560	470 543
	SNL 40/500 GL	240/500 ECA/W33	TS 560 TNF 560	ETS 560	470 543
530	**SNL 30/530 GF**	230/530 CA/W33 C 30/530 M	TS 600 TNF 600	ETS 600	480 553
	SNL 30/530 GL	230/530 CA/W33	TS 600 TNF 600	ETS 600	480 553
	SNL 40/530 GF	240/530 ECA/W33	TS 600 TNF 600	ETS 600	480 553
	SNL 40/530 GL	240/530 ECA/W33	TS 600 TNF 600	ETS 600	480 553

1) 222(00), 223(00), 230(00), 231(00), 232(00), 240(00) – spherical roller bearing, C... – CARB toroidal roller bearing.
Only typical bearings are listed. Other bearing variants can also fit the housing.

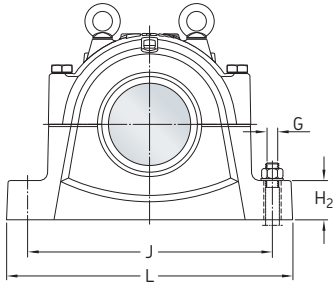

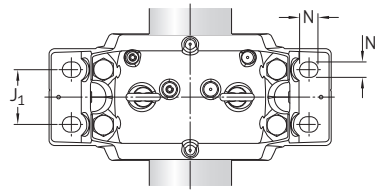

Shaft diameter	**Dimensions** Housings															**Eye bolt** according to DIN 580	**Mass** Housing
d_a	d_b	A	A_1	C_a	D_a	H	H_1	H_2	J	J_1	L	N	N_1	s	G		
mm	mm															–	kg
500	530	460	430	167	720	835	420	135	1 030	260	1 220	60	48	35	42	M 42	755
	530	460	430	226	720	835	420	135	1 030	260	1 220	60	48	35	42	M 42	751
	530	460	430	218	720	835	420	135	1 030	260	1 220	60	48	35	42	M 42	755
	530	460	430	238	720	835	420	135	1 030	260	1 220	60	48	35	42	M 42	751
530	560	470	440	185	780	920	460	155	1 110	260	1 330	70	56	35	48	M 48	947
	560	470	440	248	780	920	460	155	1 110	260	1 330	70	56	35	48	M 48	941
	560	470	440	250	780	920	460	155	1 110	260	1 330	70	56	35	48	M 48	947
	560	470	440	270	780	920	460	155	1 110	260	1 330	70	56	35	48	M 48	941



Split plummer block housings SED 30, 31, 32 and 39 series

Bearing types
- Spherical roller bearings

Bearing dimension series
- 30, 31, 32 and 39

Shaft diameter range
- 430 to 900 mm

Typical shaft-bearing combinations
- Plain shaft with bearing on an adapter sleeve
- Stepped shaft with bearing on a cylindrical seat

Seal
- Multi-seal

Lubrication
- Grease
- Oil

Material
- Spheroidal graphite cast iron

Mounting
- Eight-bolt mounting

Compliance to standards
- Not standardized

SED plummer (pillow) block housings are large split housings designed to accommodate heavy loads acting perpendicular toward the support surface within an angle of ±55°. These types of loads are typically encountered in conveyors, mills and crushers.

Split plummer block housings SED 30, 31, 32 and 39 series

Designations 333

Standard housing design 334
Features and benefits 334
Housing material 336
Paint, corrosion protection 336
Dimension standards 336

Housing variants 336
Housings for circulating oil lubrication systems 336

Sealing solutions 337
Multi-seals 337
End covers 337

Design considerations 338
Typical shaft-bearing combinations . . . 338
Locating and non-locating bearing positions 338
Load carrying capacity 338
Operating temperature 340
Operating speed 340
Attachment bolt recommendations 340

Lubrication 342
Initial grease fill 342
Relubrication 342
Oil lubrication 342

Mounting 342
Torque specifications 342
Supporting the housing 343
Eye bolts 343

Condition monitoring 343

Accessories 343

Ordering information 343

Product tables
6.1 SED plummer block housings for bearings on an adapter sleeve . . 344

Designations

Designation system for SED plummer block housings

SED 31/530 AL

Series

SED	Standard plummer block housing, spheroidal graphite cast iron

Size identification

30..	Housing for bearings in the 30 dimension series
31..	Housing for bearings in the 31 dimension series
32..	Housing for bearings in the 32 dimension series
39..	Housing for bearings in the 39 dimension series
..92 and ..96	Size code, related to the bearing bore size
../500 to /950	Size code, related to the bearing bore size

Suffixes[1)]

–	Housing for bearings on an adapter sleeve and a plain shaft
G	Housing for bearings on a cylindrical seat and a stepped shaft
A	Housing for shaft end, one side closed
B	Housing for a through shaft
F	Housing for the locating bearing position
L	Housing for the non-locating bearing position
RT	Housing prepared for circulating oil lubrication
V	Grease escape hole in the cover
P01 to P..	Paint variant according to customer specification (no symbol indicates SKF standard paint)

[1)] When multiple suffixes are used, they are listed in the same order as shown here.

Standard housing design

SED plummer (pillow) block housings are large symmetrical, split housings consisting of a housing base, cap and two split covers (→ **fig. 1**). The covers are bolted to the base/cap with hexagon head bolts on each side. The housings have eight drilled attachment bolts holes in the base as standard. Two cast holes in the cap facilitate handling.

The SED housing series consists of six different housing bodies. Each housing body can accommodate multiple bearing series and sizes. The bearing envelope, the outside diameter and width, determine the cover design and the dimensions of both the cover and bearing seat.

Fig. 1

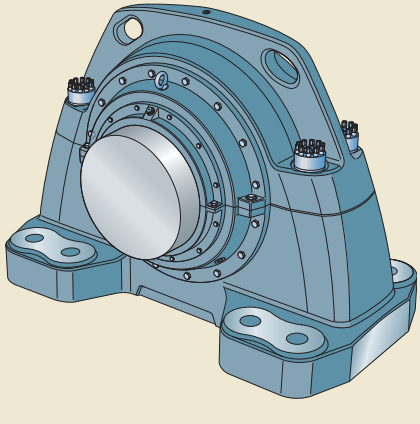

Features and benefits

SED plummer block housings have the following features and benefits:

Stiff housing

Standard SED housings are made of spheroidal graphite cast iron. The housings are reinforced with ribs in the base, an integral flange on the cap, and additional material around the attachment bolt holes (→ **fig. 2**). This design contributes to the overall stiffness of the housing and minimizes the total weight.

Easy mounting

The housing base and cap are held together by four Superbolt® multi-jack tensioners (up to size M 80) (→ **fig. 3**). Each bolt consists of 10 to 14 M 16 hexagon head bolts that can be installed easily by one person using a torque wrench.

Machined base ends

SED housings have machined base ends. This makes alignment easier and provides good contact with stops when they are used (→ **fig. 4**).

Safe, easy handling

All housing parts are prepared for safe, easy handling and lifting. There are two holes cast into the integral flange on the cap (→ **fig. 5**). The housing base and covers can be lifted with eye bolts inserted into existing threaded holes.

Grease/oil escape holes

SED housings have three drilled and tapped holes in the base for evacuation of grease or oil, as standard (→ **fig. 6**).

® Superbolt is a trademark of the Nord-Lock Group.

Fig. 4

Machined base ends

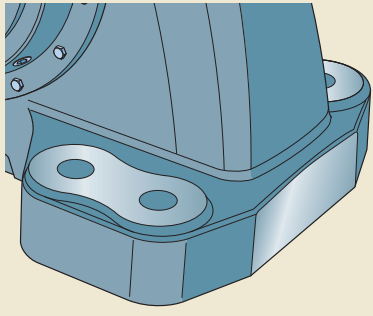

Fig. 2

Stiff housing

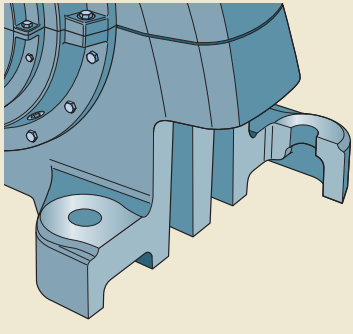

Fig. 5

Lifting holes

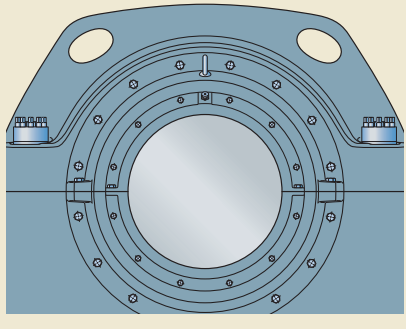

Fig. 3

Superbolts

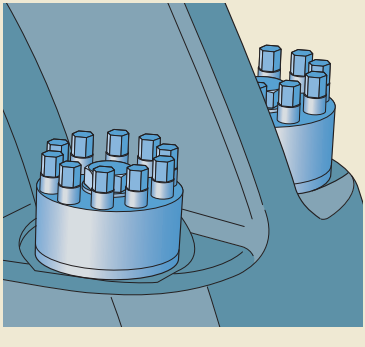

Fig. 6

Grease/oil escape holes

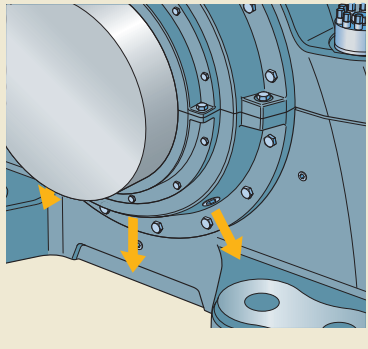

Housing material

SED plummer block housings are made of spheroidal graphite cast iron.

Paint, corrosion protection

SED housings are painted black (RAL 9005) using a water based alkyd/acryl paint. The paint protects the housing in accordance with ISO 12944-2, corrosivity category C3, i.e. exterior atmospheres with a moderate level of pollution; coastal areas with low salinity; interior atmospheres with high humidity and some air pollution (→ *Environmental condition*s, **page 36**). The paint is not affected by most lubricating or engine oils, cutting fluids or alkalescent washing chemicals. Housings can be repainted with most water or solvent based 1- or 2-component paints.

Unpainted surfaces are protected by a solventless rust inhibitor.

Dimension standards

The dimensions of SED housings are not standardized either nationally or internationally.

Housing variants

In addition to standard design SED housings, a number of variants are also available. Variants include housings painted to other colours and corrosivity categories, housings with a narrower base and differently positioned attachment bolt holes, housings suitable for bearings on a cylindrical seat on stepped shafts, and housings modified for circulating oil lubrication.

For additional information, contact the SKF application engineering service.

Housings for circulating oil lubrication systems

Housings modified for circulating oil lubrication systems have a threaded oil outlet hole in each cover (designation suffix RT). The tapped hole used for grease relubrication can be used as the oil inlet.

Sealing solutions

Multi-seals

SED plummer block housings are supplied standard with a multi-seal on each side, which consists of an integrated labyrinth seal and a three stage labyrinth ring. An O-ring holds the labyrinth ring in place on the shaft. The radial shaft seal is installed in the radial seal cover, which is then mounted onto the labyrinth seal cover.

The multi-seal is designed for both grease and circulating oil lubrication. The seal can be relubricated via a grease fitting in the radial seal cover (→ **fig. 7**).

Table 1 provides an overview of the characteristics and suitability of the multi-seal. This information should be used a guideline, which cannot substitute for testing a seal in its application.

End covers

SED housings are supplied with a cover for either shaft ends or through shafts:

- Housings with a cover for shaft ends have the designation suffix A.
- Housings with a cover for through shafts have the designation suffix B.

For details about the permissible length of the shaft end, contact the SKF application engineering service.

Fig. 7

Multi-seal

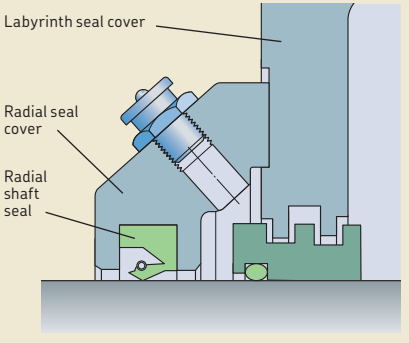

Table 1

Multi-seals for SED plummer block housings

Seal	
Type	Integrated labyrinth and radial shaft seal
Material	grey cast iron, nitrile rubber
Application conditions and requirements	
Temperature [°C]	–40 to +100
Temperature [°F]	–40 to +210
Max. circumferential speed[1] [m/s]	7,5
Max. misalignment [°]	0,3
Low friction	suitable
Shaft tolerance class	h9Ⓔ
Shaft roughness R_a [µm]	≤ 3,2
Sealing suitability	
Dust	++
Fine particles	++
Coarse particles	++
Chips	++
Liquids when sprayed	+
Direct sunlight	++

Symbols: ++ very suitable + suitable

[1] Limited by the radial shaft seal

Design considerations

For general information about system design, refer to the following sections:

- *Typical shaft-bearing combinations* (→ **page 41**)
- *Locating/non-locating bearing arrangements* (→ **page 40**)
- *Load carrying capacity* (→ **page 44**)
- *Axial load carrying capacity for bearings on a sleeve* (→ **page 44**)
- *Specifications for shafts and housing support surfaces* (→ **page 45**)

For additional information about rolling bearings and adapter sleeves, refer to the product information available online at skf.com/bearings.

Fig. 8

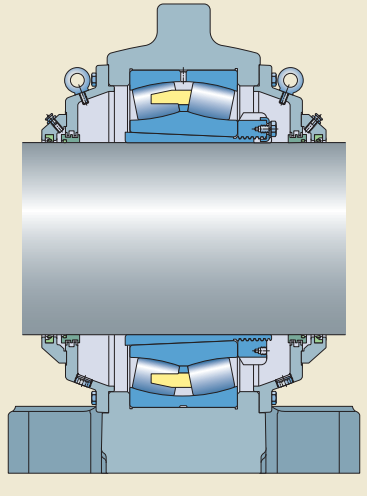

Typical shaft-bearing combinations

SED housings can accommodate different shaft-bearing combinations:

- plain shaft with bearing on an adapter sleeve (→ **fig. 8**)
- stepped shaft with bearing on a cylindrical seat

Plain shaft with bearing on an adapter sleeve

This arrangement is standard for SED housings. Housings, appropriate parts and dimensions are listed in **product table 6.1** starting on **page 344**.

Stepped shaft with bearing on a cylindrical seat

Housings to accommodate this shaft arrangement are available on request. For additional information, contact the SKF application engineering service.

Locating and non-locating bearing positions

SED housings can be used for both the locating and non-locating bearing positions and are supplied in two designs:

- Housings with the designation suffix F have a bearing seat that matches the bearing width. These housings should be used for spherical roller bearings in the locating position and CARB toroidal roller bearings in the non-locating position.
- Housings with the designation suffix L have a bearing seat that is wider than the bearing. These housings should be used for spherical roller bearings in the non-locating position. The possible axial displacement of the bearing is listed in the product tables (parameter “s”).

Load carrying capacity

SED housings are intended for loads acting perpendicularly toward the support surface within an angle of ±55°. If loads acting in other directions occur, contact the SKF application engineering service.

Breaking loads and safety factors

Guideline values for the breaking loads for housings made of spheroidal graphite cast iron are listed in **table 2**. To obtain the permissible load for a housing, the appropriate breaking load value should be divided by a factor based on the safety requirements. In general engineering, a safety factor of 6 is typical (→ *Load carrying capacity*, **page 44**).

The permissible load can only be exploited if the cap bolts are tightened at least to the torque values listed in **table 3** on **page 339**.

If the housing is not supported over its entire base, the load carrying capacity may be affected. For additional information, contact the SKF application engineering service.

Additional housing support

When loads acting parallel to the support surface occur, a sufficiently strong stop should be provided to counter the load.

Table 2

Breaking loads for SED plummer block housings

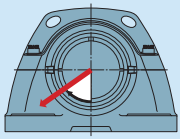

$P_{55°}$

Housing body Size	Breaking loads $P_{55°}$
–	kN
1	26 000
2	30 000
3	35 000
4	48 000
5	49 000
6	69 000

Table 3

Tightening torque values for cap bolts

Housing body Size	Cap bolts (Superbolts) Designation to ISO 262 Grade 10.9 bolt body	Jack bolt Size	Tightening torque
–	–		Nm
1	SB12-M 68x6x300/W	M 16x1,5	350
2	SB12-M 68x6x300/W	M 16x1,5	350
3	SB12-M 72x6x300/W	M 16x1,5	350
4	SB12-M 80x6x350/W	M 16x1,5	350
5	SB12-M 80x6x350/W	M 16x1,5	350
6	SB12-M 80x6x350/W	M 16x1,5	350

Operating temperature

The permissible operating temperature is mainly limited by the seal (→ **table 3**, **page 339**) and the lubricant in the bearing. For temperature limits of SKF bearings and lubricants, refer to the product information available online at skf.com/bearings.

The housing material does not have any additional temperature limits, except for very low temperature applications where impact strength could be a factor.

The housing paint is heat resistant up to 80 °C *(175 °F)* material temperature or 100 °C *(210 °F)* ambient temperature.

When temperatures outside the permissible range are expected, contact the SKF application engineering service.

Operating speed

The seals can limit the permissible operating speed. They are suitable for circumferential speeds of up to 7,5 m/s.

For speed limits of the bearing, refer to the product information available online at skf.com/bearings.

Attachment bolt recommendations

SKF recommends using Superbolt multi-jack tensioners as attachment bolts for easier and more reliable mounting compared to standard hexagon head bolts. In typical applications, 10.9 class hexagon head bolts in accordance with ISO 4014 can be used together with washers. If the load does not act perpendicularly toward the base, it may be necessary to use stronger, 12.9 class bolts.

Torque values for cover bolts and attachment bolts

Housing body	**Cover bolts**		**Radial seal cover**	
Size	**Cover** Size	Tightening torque	Size	Tightening torque
–	–	Nm	–	Nm
1	M 16/M 24	200/665	M 10	50
2	M 16/M 24	200/665	M 10	50
3	M 16/M 24	200/665	M 10	50
4	M 16/M 24	200/665	M 10	50
5	M 16/M 24	200/665	M 10	50
6	M 16/M 24	200/665	M 10	50

[1] L = length

SKF housings can withstand loads resulting from tightening the attachment bolts to the torque values typically recommended by bolt manufacturers (→ **table 4**). They are valid for oiled, but otherwise untreated thread surfaces. Hexagon head bolts tightened to the recommended torque value cannot accommodate any load in the direction of the bolt axis. SKF cannot guarantee that tightening to the recommended value provides sufficient anchoring. Make sure that attachment bolts, dowels or stops, and a sufficiently strong support can accommodate all occurring loads.

Table 4

Housing body	**Attachment bolts**				
	Superbolts			**Hexagon head bolts**	
Size	Grade 10.9 bolt body[1)]	Jack bolt		Size	Tightening torque
		Size	Tightening torque		
–	–		Nm	–	Nm
1	SB12-M 72x6xL/W	M 16x1,5	350	M 72	26 500
2	SB12-M 72x6xL/W	M 16x1,5	350	M 72	26 500
3	SB12-M 80x6xL/W	M 16x1,5	350	M 80	36 600
4	SB12-M 80x6xL/W	M 16x1,5	350	M 80	36 600
5	SB12-M 80x6xL/W	M 16x1,5	350	M 80	36 600
6	SB12-M 80x6xL/W	M 16x1,5	350	M 80	36 600

Lubrication

SED plummer block housings are intended for both grease and circulating oil lubrication systems. The lubricant should be selected based on the operating conditions of the bearing. For additional information about lubricant selection, refer to the product information available online at skf.com/bearings.

Initial grease fill

If no other requirements exist, the free space in the bearing as well as the gaps of the labyrinth seal should be completely filled with grease and the free space in the housing should be filled to 20% of its volume. For highly contaminated environments and slow speeds, fill the housing to 70–80%.

For additional information, contact the SKF application engineering service.

Fig. 9

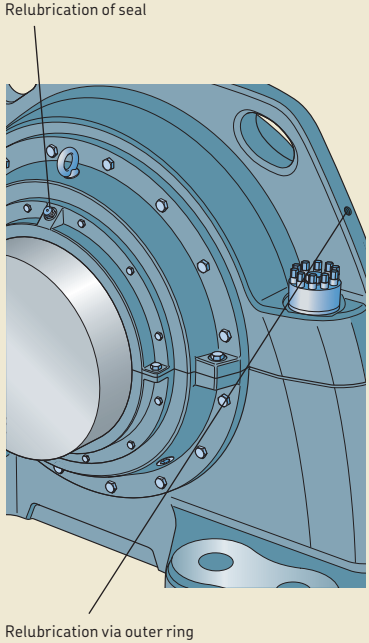

Relubrication

SED plummer block housings enable relubrication of the incorporated bearings and seals. They have two holes that have been drilled and tapped for a button-head grease fitting (→ **fig. 9**). The holes are in accordance with DIN 3404 and used to relubricate spherical roller bearings with a relubrication feature (a lubrication groove and holes in the outer ring). When applying grease via the relubrication feature, the shaft should be rotating.

Grease/oil escape holes

SED housings have three drilled and tapped holes in the base for evacuation of grease or oil, as standard (→ **fig. 6**, **page 335**) as the grease or oil cannot escape via the seal if relubrication is required.

When grease lubrication is used, these escape holes can also be used for spot checks of grease quality.

Oil lubrication

SED housings with the designation suffix RT can be used for circulating oil lubrication systems. The same holes that are used for grease relubrication (via the annular groove and lubrication holes in the outer ring of the bearing) can be used as the oil inlet.

Mounting

SED housings must be mounted properly using the appropriate tools and state of the art mechanical mounting methods. All the associated components must also meet certain basic requirements (→ *Specifications for shafts and housing support surfaces*, **page 45**). For information about mounting rolling bearings, refer to the *SKF bearing maintenance handbook* or skf.com/mount.

Torque specifications

Cap, cover and attachment bolts should be tightened to the torque values listed in **tables 3** and **4**, **pages 339** and **340**. The cover bolts are in accordance with ISO 4017. For information about attachment bolts, refer to *Attachment bolt recommendations* on **page 340**.

Supporting the housing

A stop should be used to accommodate loads acting parallel to the support surface. The stop also makes alignment during mounting easier.

Eye bolts

All separate components are prepared for lifting. There is an integral flange on the cap with two cast holes. The housing base can be lifted with eye bolts inserted into the threaded holes for the cap bolts.

Various threaded holes in the covers can be used for inserting eye bolts.

Condition monitoring

SED housings have a drilled and tapped hole at the integral flange on the cap specially designed for the SKF wireless vibration sensor, CMWA 8800[1)].

The CMWA 8800 Wireless Condition Monitoring Node is a combined sensor and wireless communication node that measures both vibration and temperature. The device uses the WirelessHART communication protocol, which offers a simple, reliable and secure means of transmitting machine vibration and temperature data wirelessly back to a host computer network.

SED housings also have additional positions for other sensors (→ **fig. 10**).

Position 1 is a measurement point perpendicular to the shaft appropriate for temperature sensors.

Position 2 is a measurement point perpendicular or parallel to the shaft appropriate for vibration sensors.

Position 3 is a drilled hole for lubrication perpendicular to the shaft that can be used for both temperature and vibration sensors.

Accessories

There are several accessories available for SED housings, including centralized lubrication systems and condition monitoring sensors. For additional information, refer to *SKF tools and products* (→ **page 47**).

1) Check availability before ordering.

Fig. 10

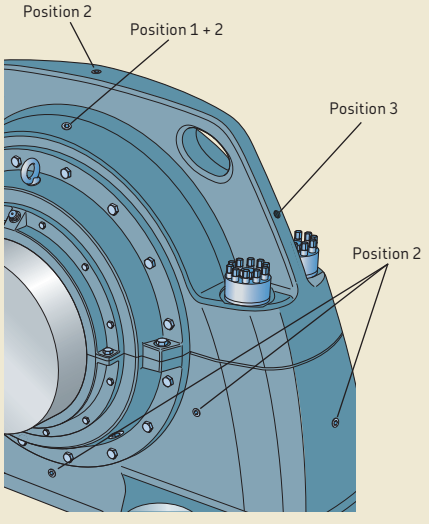

Ordering information

SED housings are supplied with the appropriate covers, multi-seals and a wireless condition monitoring sensor. Bearings and adapter sleeves must be ordered separately.

Order example

Two plummer block housings are required for two 230/560 CAK/W33 spherical roller bearings on OH 30/560 H adapter sleeves. One housing will accommodate the non-locating bearing at the end of the shaft. The other housing will accommodate the locating bearing and a through shaft.

The following items should be ordered:

- 1 housing SED 30/560 BF
- 1 housing SED 30/560 AL

6.1 SED plummer block housings for bearings on an adapter sleeve

d_a **430 – 750** mm

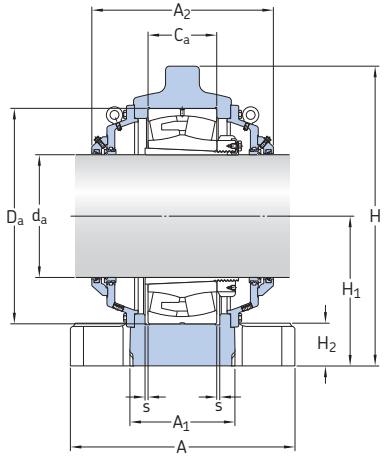

Shaft diameter d_a	Housing	Appropriate parts Bearing	Adapter seleeve	Mass Housing	Housing body Size
mm	–	–		kg	–
430	**SED 3292**	23292 CAK/W33	OH 3292 H	2 300	1
450	**SED 3296**	23296 CAK/W33	OH 3296 H	2 900	2
470	**SED 31/500**	231/500 CAK/W33	OH 31/500 H	2 300	1
	SED 32/500	232/500 CAK/W33	OH 32/500 H	3 550	4
500	**SED 31/530**	231/530 CAK/W33	OH 31/530 H	2 300	1
	SED 32/530	232/530 CAK/W33	OH 32/530 H	3 550	4
530	**SED 30/560**	230/560 CAK/W33	OH 30/560 H	2 300	1
	SED 31/560	231/560 CAK/W33	OH 31/560 H	2 900	2
	SED 32/560	232/560 CAK/W33	OH 32/560 H	3 550	4
560	**SED 39/600**	239/600 CAK/W33	OH 39/600 H	2 300	1
	SED 30/600	230/600 CAK/W33	OH 30/600 H	2 300	1
	SED 31/600	231/600 CAK/W33	OH 31/600 H	3 550	4
	SED 32/600	232/600 CAK/W33	OH 32/600 H	3 550	4
600	**SED 39/630**	239/630 CAK/W33	OH 39/630 H	2 300	1
	SED 30/630	230/630 CAK/W33	OH 30/630 H	2 900	2
	SED 31/630	231/630 CAK/W33	OH 31/630 H	3 550	4
630	**SED 39/670**	239/670 CAK/W33	OH 39/670 H	2 900	2
	SED 30/670	230/670 CAK/W33	OH 30/670 H	2 900	2
	SED 31/670	231/670 CAK/W33	OH 31/670 H	4 175	5
	SED 32/670	232/670 CAK/W33	OH 32/670 H	6 500	6
670	**SED 39/710**	239/710 CAK/W33	OH 39/710 H	2 900	2
	SED 30/710	230/710 CAK/W33	OH 30/710 H	3 600	3
	SED 31/710	231/710 CAK/W33	OH 31/710 H	4 175	5
	SED 32/710	232/710 CAK/W33	OH 32/710 H	6 500	6
710	**SED 39/750**	239/750 CAK/W33	OH 39/750 H	2 900	2
	SED 30/750	230/750 CAK/W33	OH 30/750 H	3 600	3
	SED 31/750	231/750 CAK/W33	OH 31/750 H	6 500	6
	SED 32/750	232/750 CAK/W33	OH 32/750 H	6 500	6
750	**SED 39/800**	239/800 CAK/W33	OH 39/800 H	3 600	3
	SED 30/800	230/800 CAK/W33	OH 30/800 H	4 175	5
	SED 31/800	231/800 CAK/W33	OH 31/800 H	6 500	6

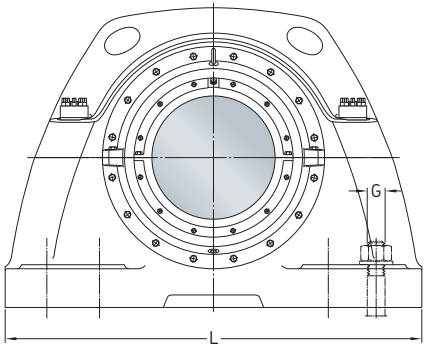

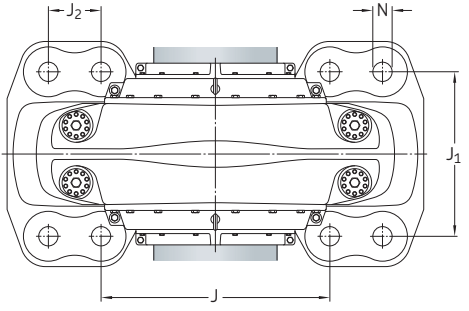

Shaft diameter	Dimensions														
d_a	A	A_1	A_2	D_a	C_a	H	H_1	H_2	J	J_1	L	N	J_2	G	s
mm	mm														
430	860	400	696	830	296	1 150	575	165	880	630	1 600	76	200	72	8
450	920	450	731	870	310	1 230	630	175	940	700	1 700	76	205	72	9
470	860	400	696	830	264	1 150	575	165	880	630	1 600	76	200	72	8
	1 000	500	786	920	336	1 325	675	195	1 100	780	1 900	84	210	80	9
500	860	400	696	870	272	1 150	575	165	880	630	1 600	76	200	72	9
	1 000	500	786	980	355	1 325	675	195	1 100	780	1 900	84	210	80	10
530	860	400	696	820	195	1 150	575	165	880	630	1 600	76	200	72	8
	920	450	731	920	280	1 230	630	175	940	700	1 700	76	205	72	9
	1 000	500	786	1 030	365	1 325	675	195	1 100	780	1 900	84	210	80	10
560	860	400	696	800	150	1 150	575	165	880	630	1 600	76	200	72	8
	860	400	696	870	200	1 150	575	165	880	630	1 600	76	200	72	9
	1 000	500	786	980	300	1 325	675	195	1 100	780	1 900	84	210	80	10
	1 000	500	801	1 090	388	1 325	675	195	1 100	780	1 900	84	210	80	11
600	860	400	696	850	165	1 150	575	165	880	630	1 600	76	200	72	8
	920	450	731	920	212	1 230	630	175	940	700	1 700	76	205	72	9
	1 000	500	786	1 030	315	1 325	675	195	1 100	780	1 900	84	210	80	10
630	920	450	731	900	170	1 230	630	175	940	700	1 700	76	205	72	9
	920	450	731	980	230	1 230	630	175	940	700	1 700	76	205	72	10
	1 000	480	801	1 090	336	1 650	840	215	1 300	770	2 100	84	210	80	11
	1 200	600	898	1 220	438	1 715	840	215	1 350	920	2 200	84	210	80	12
670	920	450	731	950	180	1 230	630	175	940	700	1 700	76	205	72	9
	900	420	711	1 030	236	1 350	675	195	1 110	685	1 900	84	210	80	10
	1 000	480	810	1 150	345	1 650	840	215	1 300	770	2 100	84	210	80	11
	1 200	600	909	1 280	450	1 715	840	215	1 350	920	2 200	84	210	80	13
710	920	450	731	1 000	185	1 230	630	175	940	700	1 700	76	205	72	10
	900	420	711	1 090	250	1 350	675	195	1 110	685	1 900	84	210	80	11
	1 200	600	886	1 220	365	1 715	840	215	1 350	920	2 200	84	210	80	12
	1 200	600	929	1 360	475	1 715	840	215	1 350	920	2 200	84	210	80	14
750	900	420	711	1 060	195	1 350	675	195	1 110	685	1 900	84	210	80	11
	1 000	480	796	1 150	258	1 650	840	215	1 300	770	2 100	84	210	80	11
	1 200	600	886	1 280	375	1 715	840	215	1 350	920	2 200	84	210	80	13

6.1 SED plummer block housings for bearings on an adapter sleeve

d_a **800 – 900** mm

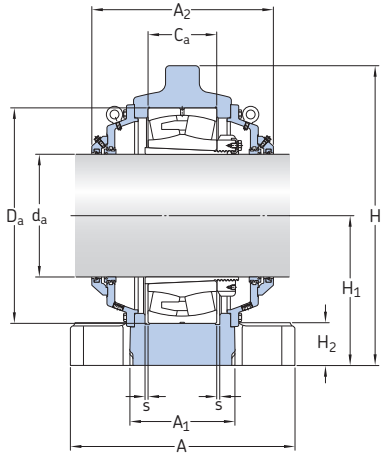

Shaft diameter d_a	**Housing**	**Appropriate parts** Bearing	Adapter seleeve	**Mass** Housing	Housing body Size
mm	–	–		kg	–
800	**SED 39/850**	239/850 CAK/W33	OH 39/850 H	3 600	3
	SED 30/850	230/850 CAK/W33	OH 30/850 H	4 175	5
	SED 31/850	231/850 CAK/W33	OH 31/850 H	6 500	6
850	**SED 39/900**	239/900 CAK/W33	OH 39/900 H	3 600	3
	SED 30/900	230/900 CAK/W33	OH 30/900 H	4 175	5
900	**SED 39/950**	239/950 CAK/W33	OH 39/950 H	4 175	5
	SED 30/950	230/950 CAK/W33	OH 30/950 H	4 175	5

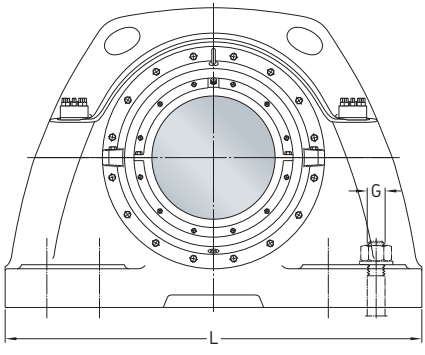

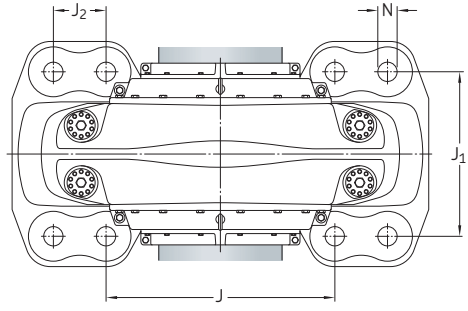

Shaft diameter	Dimensions														
d_a	A	A_1	A_2	D_a	C_a	H	H_1	H_2	J	J_1	L	N	J_2	G	s
mm	mm														
800	900	420	711	1 120	200	1 350	675	195	1 110	685	1 900	84	210	80	11
	1 000	480	796	1 220	272	1 650	840	215	1 300	770	2 100	84	210	80	12
	1 200	600	897	1 360	400	1 715	840	215	1 350	920	2 200	84	210	80	14
850	900	420	711	1 180	206	1 350	675	195	1 110	685	1 900	84	210	80	12
	1 000	480	796	1 280	280	1 650	840	215	1 300	770	2 100	84	210	80	13
900	1 000	480	796	1 250	224	1 650	840	215	1 300	770	2 100	84	210	80	12
	1 000	480	796	1 360	300	1 650	840	215	1 300	770	2 100	84	210	80	14



Split plummer block housings SONL series

Bearing types
- Self-aligning ball bearings
- Spherical roller bearings
- CARB toroidal roller bearings

Bearing dimension series
- 22

Shaft diameter range
- 75 to 240 mm
- 2 15/16 to 8 15/16 in.

Typical shaft-bearing combinations
- Plain shaft with bearing on an adapter sleeve
- Stepped shaft with bearing on a cylindrical seat

Seals
- Labyrinth

Lubrication
- Oil bath lubrication with a pick-up ring
- Circulating oil lubrication systems

Materials
- Grey cast iron
- Spheroidal graphite cast iron

Mounting
- Four-bolt mounting

Compliance to standards
- Not standardized

Supersedes
- SOFN in the 2(00) and 5(00) series

SONL plummer (pillow) block housings are specially designed for oil lubrication. They can accommodate high temperatures and bearings operating at high speeds. They have a strong, stiff design and are characterized by a number of built-in features that maximize the effects of the lubricant and extend bearing service life.

SONL housings can be found in applications ranging from fans and flywheels to paper machines and emergency power generators.

Split plummer block housings SONL series

Designations 351

Standard housing design 353
Features and benefits 354
Housing material 355
Paint, corrosion protection 355
Dimension standards 355
Interchangeabilty 355

Housing variants 356
Housing material 356
Bearing seat tolerance 356
Housings for circulating oil lubrication systems 356

Sealing solutions 356
Seal kits 358
End covers 359
High-temperature seals 359

Design considerations 360
Typical shaft-bearing combinations . . . 360
Locating and non-locating bearing positions 360
Load carrying capacity 361
Operating temperature 362
Operating speed 362
Shaft specifications 362
Attachment bolt recommendations 363

Lubrication 364
Oil bath lubrication with a pick-up ring . 364
Circulating oil lubrication systems 366

Mounting 368
Cap bolt torque specifications 368
Pinning or supporting the housing 368

Condition monitoring 368

Accessories 369

Ordering information 369

Product tables
7.1 SONL plummer block housings for bearings on an adapter sleeve, metric shafts 370
7.2 SONL plummer block housings for bearings on an adapter sleeve, inch shafts 374
7.3 SONL plummer block housings for bearings on a cylindrical seat and a stepped shaft 378

Designations

Designation system for SONL plummer block housings

SONLD 215-517 RA

Series

SONL	Plummer (pillow) block housing for oil lubrication

Material

–	Grey cast iron
D	Spheroidal graphite cast iron

Size identification

2(00)-5(00)	Housing for bearings on a cylindrical seat or adapter sleeve, diameter series 2
..(00)	Size code of the bearing, (00) × 5 = bearing bore diameter [mm]

Suffix

RA	Housing for CARB toroidal roller and self-aligning ball bearings when using a circulating oil lubrication system

Designation system for end covers

ECO 217-517

Series

ECO	End cover with two rubber O-rings for SONL plummer block housings

Size identification

2(00)-5(00)	Housing size identification

Designation system for seal kits

TSO 217 A

Series

TSO 2	Seal kit for bearings on a cylindrical seat
TSO 5	Seal kit for bearings on an adapter sleeve

Size identification

(00)	Size code of the bearing, (00) × 5 = bearing bore diameter [mm]
/...	Additional size identification for inch shafts, shaft diameter [in.]

Suffixes

–	Seal kit for through shafts
A	Seal kit for shaft ends
/VZ643	Seal kit for bearings on a cylindrical seat and a plain shaft

Designation system for oil level gauges and oil pick up rings when sold separately

GG-TSO 217-517/V51

GG-TSO Oil level gauge

Size identification

2(00)-5(00) Housing size identification

Suffix

/V51 Signifies spare part

GH-TSO 217-517/V51

GH-TSO Oil pick-up ring

Size identification

2(00)-5(00) Housing size identification

Suffixes

/V51 Oil pick-up ring – steel (signifies spare parts with standard performance)
/MB Oil pick-up ring – brass (replacement for standard)

Designation system for oil cooling tubes

AVA-0001/1

Series

AVA Oil cooling tube

Size identification

0001 Basic size to fit G 3/4 to G 1 1/2 oil outlets
/1 For housings SONL 217-517 and SONL 218-518
/2 For housings SONL 220-520 and SONL 222-522
/3 For housings SONL 224-524 to SONL 232-532
/4 For housings SONL 234-534 to SONL 248-548

Designation system for locating rings

FRB 11/230

Series

FRB Locating ring for SKF bearing housings

Size identification

.../... Width and outside diameter of the locating ring [mm]

Standard housing design

SONL plummer (pillow) block housings (→ **fig. 1**) are split housings consisting of a cap and base. They have four holes cast into the base for attachment bolts.

The housings incorporate a number of design features that make them suitable for oil lubrication in order to achieve higher speeds.

Fig. 1

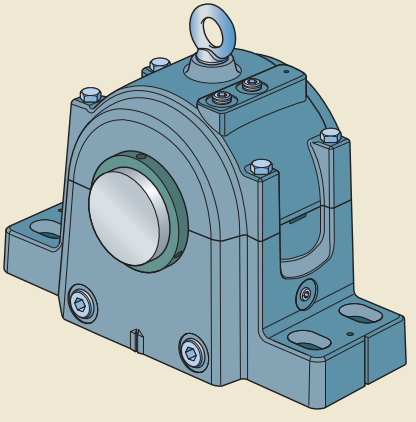

Features and benefits

SONL plummer block housings have the following features and benefits:

Simple mounting

To simplify mounting and make alignment more accurate, lines indicating the centre of the bearing seat and housing bore axis are cast into the housing base. Dimples indicate the position for dowel pins (→ **fig. 2**).

SONL housings have significantly fewer components than earlier SOFN housings. Their four cap bolts are loosened prior to delivery for easy removal.

Mounting instructions are supplied with each seal kit. The housings have an eye bolt on the cap for safe and easy handling.

Fig. 2

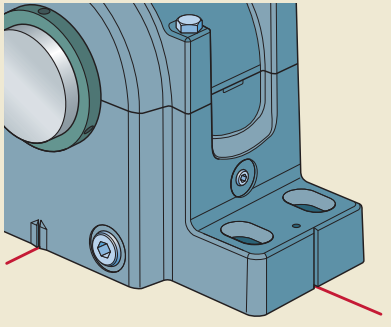

Deep sump for lower operating temperatures

SONL housings have a deep sump that holds a large volume of oil so that heat can be dissipated effectively (→ **fig. 3**). This cooling effect extends the service life of both the lubricant and the bearing.

If operating conditions require it, auxiliary oil cooling tubes are available. These can be installed through the oil outlet holes in the housing base.

Fig. 3

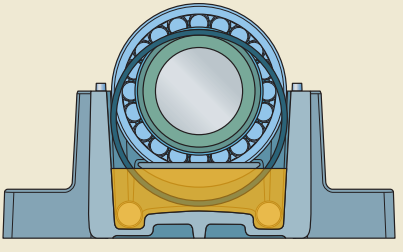

Strong, stiff and simple design

The simple, sturdy design of SONL housings provides maximum support and reduces the risk of deforming the cap or base during installation. Dowel pins between the cap and base are off-centre so that the cap can only be installed one way.

Comprehensive seal kits

In addition to the seals, seal kits for SONL housings are supplied standard with (→ **fig. 4**):

- an oil level gauge that makes it easy to visually check the level and condition of the oil
- a magnetic plug that screws into one of the four tapped holes in the housing base. This plug attracts metal particles, extending the service life of the lubricant and bearing.

Fig. 4

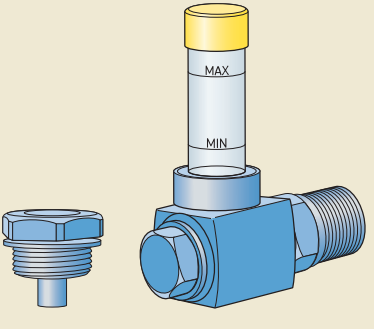

Caps and bases individually marked

The housing cap and base are matched during manufacture and are not interchangeable with the caps and bases of other housings. To prevent any mismatches, a unique serial number is marked on both the housing cap and the base (→ **fig. 5**).

Fig. 5

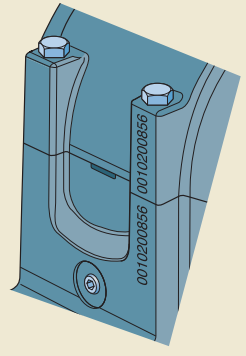

Housing material

SONL plummer block housings are made of grey cast iron.

Paint, corrosion protection

SONL plummer block housings are painted black (RAL 9005) using a water based alkyd/acryl paint. The paint protects the housing in accordance with ISO 12944-2, corrosivity category C2 (i.e. exterior atmospheres with low level of pollution, interior atmospheres where condensation may occur). The paint is not affected by most lubricating or engine oils, cutting fluids or alkalescent washing chemicals. Housings can be repainted with most water or solvent based 1- or 2-component paints.

Unpainted surfaces are protected by a solventless rust inhibitor.

Dimension standards

The dimensions of SONL plummer block housings are not standardized either nationally or internationally.

Interchangeability

SONL plummer block housings are dimensionally interchangeable with the earlier SOFN housings in the 2(00) and 5(00) series.

3(00) and 6(00) series SOFN housings are still available. For additional information, contact the SKF application engineering service.

Housing variants

In addition to standard design SONL plummer (pillow) block housings, a number of variants are also available. Variants include housings made of different materials, different bearing seat tolerance classes and additional tapped holes for circulating oil lubrication systems.

Housing material

For applications where extra strength is needed, SONL housings are also available in spheroidal graphite cast iron.

Bearing seat tolerance

SONL housings can be supplied with different bearing seat tolerance classes, e.g. for applications prone to vibration or with rotating outer ring load.

For additional information, contact the SKF application engineering service.

Housings for circulating oil lubrication systems

In applications where CARB toroidal roller and self-aligning ball bearings are lubricated by a circulating oil lubrication system, SKF recommends using SONL .. RA housings. These housings are designed for bearings that are lubricated from the side and require a slightly higher oil level than spherical roller bearings.

In SONL .. RA housings, the holes that connect the two halves of the oil sump are positioned higher than in standard housings. This enables oil to reach the rolling elements of the bearing (→ **fig. 6**).

For additional information, refer to *Using circulating oil lubrication with CARB and self-aligning ball bearings* on **page 367**.

Fig. 6

SONL .. RA housing

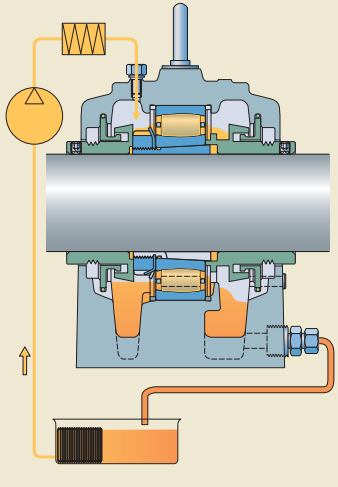

Sealing solutions

SONL housings are equipped with non-contact labyrinth seals (→ **fig. 7**). These seals retain the lubricating oil and prevent contaminants from entering the housing. The oil retaining effect is enhanced by oil traps that return oil that has passed through the labyrinth back to the oil reservoir. **Table 1** provides an overview of the seal characteristics and suitability. This information should be used as a guideline and does not substitute for testing the seal in its application.

A labyrinth seal consists of a shaft sleeve and a labyrinth ring, to form a multi-stage labyrinth. The sleeve has a clearance fit on the shaft while the labyrinth ring is stationary and mounted in the housing with an O-ring. To guide the oil pick-up ring, one shaft sleeve is provided with a groove.

The shaft sleeve can be locked onto the shaft in different ways:

- Shaft sleeves for bearings on an adapter sleeve (TSO 5..) are locked by grub screws in the shaft sleeve.
- Shaft sleeves for bearings on a cylindrical seat (TSO 2..) must be locked by an adapter ring, end plate or similar component (not supplied by SKF) on the shaft. Details for locking are shown in **product table 7.3** (→ **page 378**).

Fig. 7

Labyrinth seal

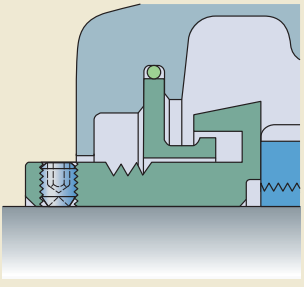

Seal kits

The seals for SONL housings are supplied as kits and must be ordered separately.

Seal kits for housings for a through shaft, designation TSO (→ **fig. 8**, **page 358**), include:

- 2 labyrinth rings with O-rings
- 2 shaft sleeves, one of them for the oil pick-up ring
- 1 oil pick-up ring
- 1 oil level gauge
- 1 magnetic plug
- mounting instructions

Table 1

Standard seal kits for SONL plummer block housings

Seal kit	For through shaft	For shaft end
Type	Labyrinth	Labyrinth
Designation	TSO	TSO .. A
Material	grey cast iron, nitrile rubber	grey cast iron, nitrile rubber
Seals per pack	2 seals	1 seal + 1 end cover

Application conditions and requirements	
Temperature [°C]	–40 to +110
Temperature [°F]	–40 to +230
Max. misalignment [°]	0,3
Low friction	++
Axial shaft displacement	++
Shaft tolerance class	[1]
Shaft roughness R_a [µm]	3,2

Symbol: ++ very suitable

[1] For information about shaft tolerances, refer to the section *Shaft specifications* on **page 362**.

Seal kits for housings for a shaft end, designation TSO .. A (→ **fig. 9**), include:

- 1 labyrinth ring with O-ring
- 1 shaft sleeve
- 1 end cover with O-rings
- 1 oil pick-up ring
- 1 oil level gauge
- 1 magnetic plug
- mounting instructions

Both the oil level gauge and the oil pick-up ring can be supplied separately.

Seal kits for bearings mounted on a cylindrical seat on plain shafts

For bearings mounted on a cylindrical seat on plain shafts, a kit with the designation TSO 2../VZ643 must be used. The seal kit includes two shaft sleeves with the same bore diameter.

End covers

Housings at the end of a shaft should have an end cover that fits into the seal groove in the housing (→ **fig. 10**).

End covers, which are made of grey cast iron, are installed with two O-rings that hold the cover in place.

Fig. 8

Seal kit for a through shaft

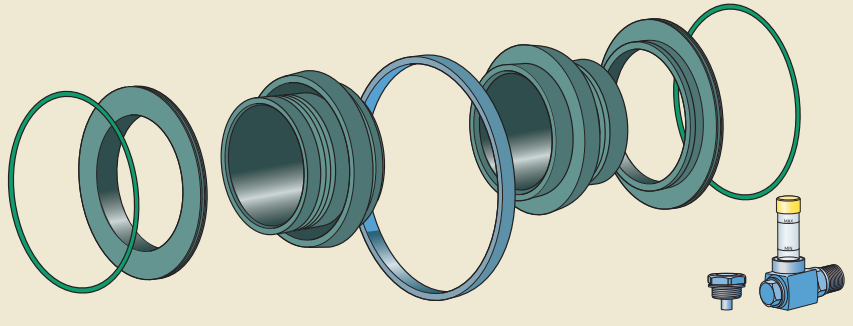

Fig. 9

Seal kit for a shaft end

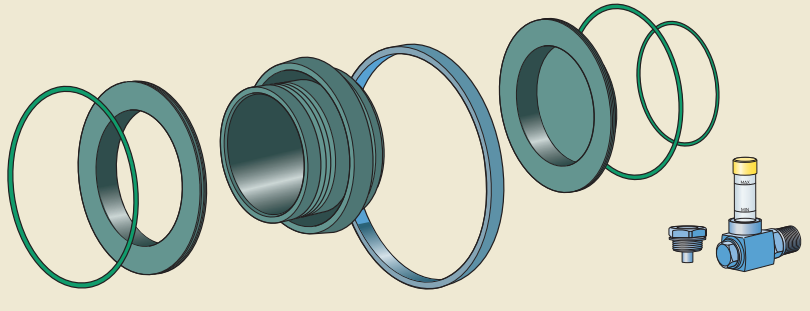

Details of the permissible length of the shaft end are listed in the product tables.

End covers are supplied as a part of the TSO .. A seal kit, but can also be ordered separately.

High-temperature seals

SKF can supply sealing solutions for high operating temperatures. For additional information, contact the SKF application engineering service.

Fig. 10

End cover

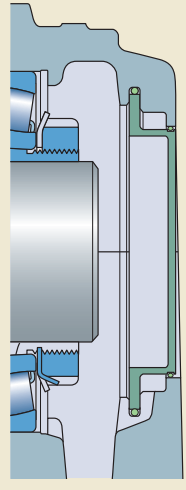

Design considerations

For general information about system design, refer to the following sections:

- *Typical shaft-bearing combinations* (→ **page 41**)
- *Locating/non-locating bearing arrangements* (→ **page 40**)
- *Load carrying capacity* (→ **page 44**)
- *Axial load carrying capacity for bearings on sleeves* (→ **page 44**)
- *Specifications for shafts and housing support surfaces* (→ **page 45**)

For additional information about rolling bearings and adapter sleeves, refer to the product information available online at skf.com/bearings.

Typical shaft-bearing combinations

SONL plummer (pillow) block housings can accommodate different shaft-bearing combinations (→ **fig. 11**):

- Plain shaft with bearing on an adapter sleeve
- Stepped shaft with bearing on a cylindrical seat
- Plain shaft with bearing on a cylindrical seat

Plain shaft with bearing on an adapter sleeve

Housings, appropriate parts and dimensions are listed in **product tables 7.1** (→ **page 370**) and **7.2** (→ **page 374**).

Stepped shaft with bearing on a cylindrical seat

Housings, appropriate parts and dimensions are listed in **product table 7.3** (→ **page 378**).

The bearing is located axially by an inboard labyrinth seal shaft sleeve that abuts the shaft shoulder, and an outboard labyrinth seal shaft sleeve that is held in place by another component (not supplied by SKF). The outside diameter of this component must be at least as large as that of the sleeve.

Plain shaft with bearing on a cylindrical seat

When using an SONL housing for this arrangement, a /VZ643 seal kit must be used. The bearing and labyrinth seal shaft sleeves must be located axially on both sides by other components (not supplied by SKF) on the shaft.

Locating and non-locating bearing positions

SONL housings can be used for both the locating and non-locating bearing positions.

The housings are machined standard for bearings in the non-locating position. Bearings in the locating position as well as CARB toroidal roller bearings must be secured in the housing on both sides with locating rings. Appropriate locating rings are listed in the product tables.

Fig. 11

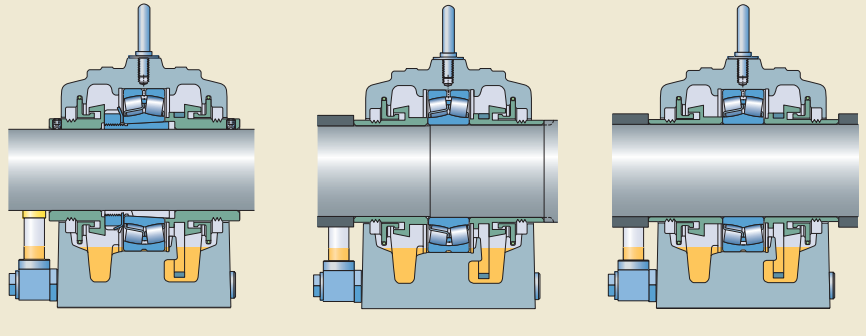

Plain shaft with bearing on an adapter sleeve | Stepped shaft with bearing on a cylindrical seat | Plain shaft with bearing on a cylindrical seat

Load carrying capacity

SONL housings are intended for loads acting perpendicularly toward the support surface. The housings should always be supported over the entire base. Perpendicular loads acting towards the base are limited only by the bearing. If loads acting in other directions occur, be sure that the magnitude of the load is permissible for the housing, the cap bolts and the attachment bolts. When housings are subjected to cyclic loads or dynamic imbalance, contact the SKF application engineering service.

Breaking loads and safety factors

Guideline values for the breaking loads P for housings made of grey cast iron are listed in **table 2**. To obtain the permissible load for a housing, the appropriate breaking load value should be divided by a factor based on the safety requirements. In general engineering, a safety factor of 6 is typical (→ *Load carrying*

Table 2

Breaking loads for SONL plummer block housings made of grey cast iron

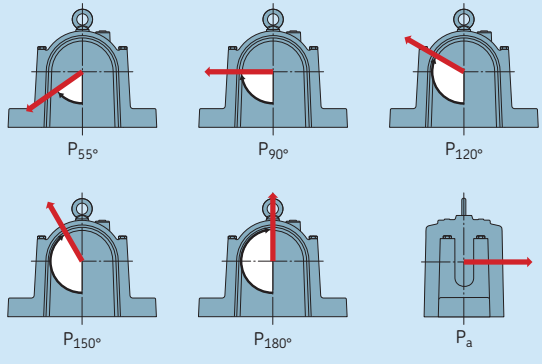

Housing Size	Breaking loads $P_{55°}$	$P_{90°}$	$P_{120°}$	$P_{150°}$	$P_{180°}$	P_a
–	kN					
217-517	690	260	190	180	230	90
218-518	900	350	250	230	300	120
220-520	1 080	450	300	280	360	140
222-522	1 260	500	350	320	420	170
224-524	2 100	780	580	540	700	280
226-526	2 550	980	700	650	850	340
228-528	2 550	1 020	700	650	850	340
230-530	3 000	1 230	830	770	1 000	400
232-532	3 000	1 230	830	770	1 000	400
234-534	3 360	1 330	940	860	1 120	450
236-536	3 750	1 530	1 040	960	1 250	500
238-538	3 750	1 530	1 040	960	1 250	500
240-540	4 950	2 000	1 380	1 270	1 650	660
244-544	6 350	2 550	1 750	1 600	2 100	840
248-548	6 350	2 550	1 750	1 600	2 100	840

capacity, **page 44**). The permissible load can only be exploited if the cap bolts are tightened at least to the torque values listed in **table 3**. The load P_a is the axial breaking load of the housing. If the incorporated bearing is mounted on a sleeve, check the permissible axial load for the sleeve.

For housings made of spheroidal graphite cast iron, the values obtained from **table 2** on **page 361** should be multiplied by a factor of 1,8.

Additional housing support

When loads act at angles between 55° and 120°, or when the axial loads are greater than 5% of $P_{180°}$ (→ **table 2** on **page 361**), the housing should be pinned to the support surface or a stop should be provided to counter the load. The dowel pins or stop should be sufficiently strong to accommodate the loads acting parallel to the support surface.

Recommendations for the position and size of the holes to accommodate dowel pins are provided in **table 8** on **page 368**.

Load carrying capacity of the cap bolts

Approximate values for the yield points for four cap bolts are provided in **table 3**. The values in **table 3** apply to 8.8 class cap bolts, which are supplied with SONL housings.

Operating temperature

The permissible operating temperature is mainly limited by the seals (→ **table 1**, **page 357**), the oil level gauge and the lubricant. For temperature limits of SKF bearings and lubricants, refer to the product information available online at skf.com/bearings. The permissible operating temperature for the oil level gauge is 110 °C *(230 °F)*.

The housing material does not have any additional temperature limits, except for very low temperature applications where impact strength could be a factor.

The housing paint is heat resistant up to 80 °C *(175 °F)* material temperature or 100 °C *(210 °F)* ambient temperature.

When temperatures outside the permissible range are expected, contact the SKF application engineering service.

Operating speed

The permissible operating speed of the incorporated bearing is not limited by the housing.

Shaft specifications

For bearings mounted on an adapter sleeve, the recommended shaft tolerance class is h9Ⓔ. A cylindricity tolerance of IT5/2 is satisfactory. The same specifications are applicable for the seats of labyrinth seal shaft sleeves.

For bearings mounted on a cylindrical seat on stepped shafts (→ **fig. 12**), follow the guidelines in the SKF catalogue *Rolling bearings* for the bearing seat. The bore of the shaft sleeve of the inboard labyrinth seal is in accordance with the F7 tolerance class and fits bearing seats machined to typical tolerances. The bore of the shaft sleeve of the outboard labyrinth seal is in accordance with the H7 tolerance class and fits shafts machined to the h9Ⓔ tolerance class.

For bearings mounted on a cylindrical seat on plain shafts, the bore of the shaft sleeves of the labyrinth seals is in accordance with F7 tolerance class and fits bearing seats machined to typical tolerances.

Fig. 12

Shaft specifications

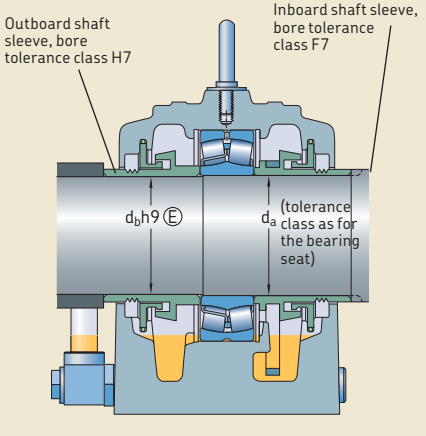

Attachment bolt recommendations

In typical applications, 8.8 class hexagon head bolts, in accordance with ISO 4014, can be used together with washers. If the load does not act perpendicularly toward the base, it may be necessary to use stronger 10.9 class bolts.

SKF housings can withstand loads resulting from tightening the attachment bolts to the torque values recommended by bolt manufacturers (→ **table 3**). They are valid for oiled, but otherwise untreated thread surfaces. SKF cannot guarantee that tightening to the recommended value provides sufficient anchoring. Make sure that attachment bolts, dowels or stops, and a sufficiently strong support can accommodate all occurring loads.

Table 3

Load carrying capacity and torque values for cap bolts and attachment bolts

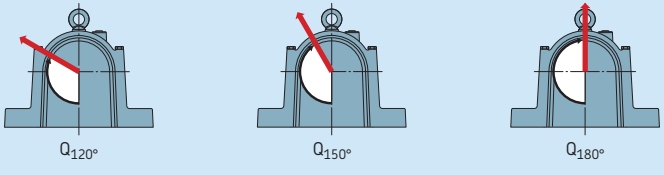

Housing	Cap bolts					Attachment bolts	
Size	Yield point for four bolts			Designation to ISO 4014	Tightening torque	Size	Tightening torque[1]
	$Q_{120°}$	$Q_{150°}$	$Q_{180°}$				
–	kN			–	Nm	–	Nm
217-517	300	170	150	M 10×75	50	M 20	385
218-518	440	250	220	M 12×80	80	M 20	385
220-520	440	250	220	M 12×90	80	M 24	665
222-522	440	250	220	M 12×90	80	M 24	665
224-524	800	460	400	M 16×110	150	M 24	665
226-526	800	460	400	M 16×120	150	M 24	665
228-528	1 250	720	620	M 20×130	200	M 30	1 310
230-530	1 250	720	620	M 20×140	200	M 30	1 310
232-532	1 250	720	620	M 20×140	200	M 30	1 310
234-534	1 800	1 040	900	M 24×160	350	M 30	1 310
236-536	1 800	1 040	900	M 24×160	350	M 30	1 310
238-538	1 800	1 040	900	M 24×160	350	M 36	2 280
240-540	1 800	1 040	900	M 24×160	350	M 36	2 280
244-544	1 800	1 040	900	M 24×180	400	M 36	2 280
248-548	2 860	1 650	1 430	M 30×200	400	M 36	2 280

[1] Recommended by bolt manufacturers.

Lubrication

SONL plummer (pillow) block housings are designed for two methods of oil lubrication:

- oil bath lubrication with a pick-up ring
- circulating oil

The lubricant should be selected based on the operating conditions of the bearing. For additional information about lubricant selection, refer to the product information available online at skf.com/bearings.

Oil bath lubrication with a pick-up ring

Oil bath lubrication with a pick-up ring is typically used with SONL housings (→ **fig. 13**). It provides a uniform supply of lubricant to the bearing.

This oil lubrication method uses a ring that hangs loosely from the labyrinth seal shaft sleeve on one side of the bearing. It hangs deep into the oil reservoir in the bottom half of the housing. As the shaft rotates, the ring follows, picking up oil from the sump and bringing it to a collecting trough. The oil then flows through the bearing and back into the oil sump.

In the fifty years that this lubrication method has been used, there has not been any record of wear where the ring contacts its seat on the labyrinth seal shaft sleeve – regardless of the shaft dimensions, or speed of the application.

Oil quantities

Housings should be filled with the recommended oil quantities listed in **table 4**. Markings on the inside of the housing base and on the oil level gauge indicate the correct oil level. To avoid leakage, do not exceed the recommended oil level. The oil pick-up ring enables a wide range between maximum and minimum oil levels. This results in a correspondingly long period between refills or oil changes.

The minimum and maximum levels indicated on the oil level gauge apply to standstill. The oil level may drop during operation and may vary even more during start-up. If oil is replenished during operation, keep the level 5 mm below the maximum mark.

Fig. 13

Oil bath lubrication with a pick-up ring

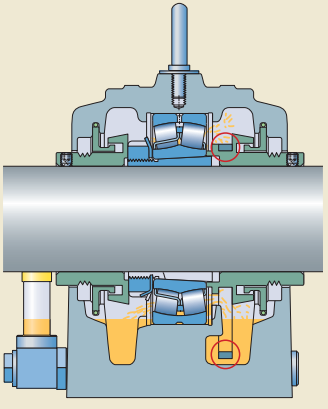

Table 4

Oil quantities

Housing Size	**Oil fill** min	max
–	l	
217-517	0,3	0,4
218-518	0,3	0,5
220-520	0,4	0,6
222-522	0,6	0,9
224-524	0,9	1,3
226-526	0,9	1,4
228-528	1	1,5
230-530	1	1,7
232-532	1,3	2
234-534	2,5	3,5
236-536	2,9	4,2
238-538	3,1	4,5
240-540	3	4,5
244-544	3,8	5,8
248-548	4,8	6,9

Precaution after machine stops

Before start-up, the oil level should be filled to the maximum mark on the oil level gauge. This is even more important after longer machine stops to avoid the possibility of dry-running the bearing until the oil pick-up ring delivers a sufficient amount of lubricant.

After shorter machine stops, a sufficient amount of oil remains in the oil sump and in the bearing to provide lubricant during start-up.

Magnetic plugs

Each seal kit contains a magnetic plug. The plug can be fitted in one of the oil outlet holes in the housing base. The plug attracts metal contaminants in the oil, to extend bearing service life.

Special oil pick-up ring for use on shafts with electromagnetic clutches

If shafts with electromagnetic clutches are to be supported in SONL housings, the standard steel oil pick-up ring must be replaced by a brass ring (GH-TSO ...-.../MB). Appropriate brass rings are listed in **table 5**.

Oil cooling tubes

In high temperature applications, where an oil pick-up ring is used, auxiliary cooling tubes should be installed (→ **fig. 14**, **page 366**). They use water, which has to be provided via an external system, to cool the oil in the housing. The pressure of the cooling medium should not exceed 4 bar.

Oil cooling tubes are available in different sizes (→ **table 6**). Depending on the need, one or two cooling tubes can be installed via the oil outlet holes in the housing base. Detailed mounting instructions are provided with the products.

Oil cooling tubes are identified by the basic designation AVA-0001 followed by a size identification, e.g. AVA-0001/3.

Oil outlets

Tapped holes in the housing base that are not used for the oil level gauge or cooling tubes can be used as oil outlets.

Table 5

Brass oil pick-up rings

Housing Size	**Pick-up ring** Designation
217-517	GH-TSO 217-517/MB
218-518	GH-TSO 218-518/MB
220-520	GH-TSO 220-520/MB
222-522	GH-TSO 222-522/MB
224-524	GH-TSO 224-524/MB
226-526	GH-TSO 226-526/MB
228-528	GH-TSO 228-528/MB
230-530	GH-TSO 230-530/MB
232-532	GH-TSO 232-532/MB
234-534	GH-TSO 234-534/MB
236-536	GH-TSO 236-536/MB
238-538	GH-TSO 238-538/MB
240-540	GH-TSO 240-540/MB
244-544	GH-TSO 244-544/MB
248-548	GH-TSO 248-548/MB

Table 6

Oil cooling tubes

Housing Size	**Oil cooling tube** Designation
217-517 and 218-518	AVA-0001/1
220-520 and 222-522	AVA-0001/2
224-524 to 232-532	AVA-0001/3
234-534 to 248-548	AVA-0001/4

Fig. 14

Oil cooling tubes

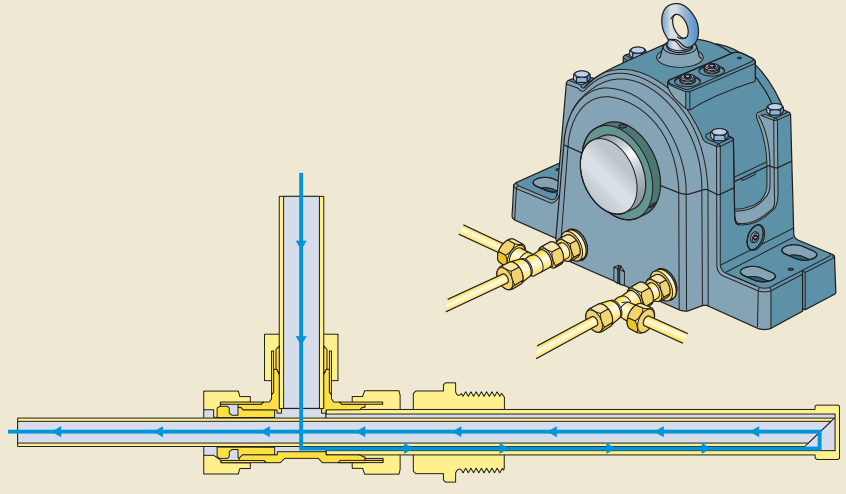

Fig. 15

Circulating oil lubrication system

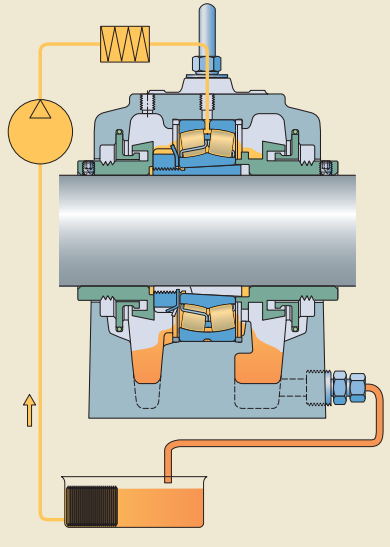

Circulating oil lubrication systems

Circulating oil lubrication systems are generally preferred when high speeds generate an excessive amount of heat, or when there are high ambient temperatures. For this lubrication method, the oil pick-up ring should not be used and the oil level gauge is not needed.

A circulating oil lubrication system typically has supply lines attached to the housing cap and drain lines attached to the base (→ **fig. 15**). Circulation is normally produced with the aid of a pump. After the oil has passed through the bearing, it drains from the housing and flows into a tank. It is filtered and, if required, cooled before being returned to the housing. Proper filtering and cooling of the oil are important factors for bearing and oil service life, and can provide improved machinery performance as well as cost savings.

SKF supplies different standard solutions for circulating oil lubrication systems. For smaller systems, e.g. 1–2 fans or pumps, the SM-100 Oil Circulating Unit is available. For larger systems, SKF Flowline is available.

Relevant abutment dimensions for connecting a circulating oil lubrication system to an SONL housing are listed in **table 7**.

Using a circulating oil lubrication system with spherical roller bearings

SONL housings have two tapped holes in the cap that can be used as oil inlets. The hole in the centre of the cap should be used to lubricate spherical roller bearings with a relubrication feature (a lubrication groove and holes in the outer ring).

The housing base has four tapped holes that can be used as oil outlets.

Using a circulating oil lubrication system with CARB and self-aligning ball bearings

In a circulating oil lubrication system, CARB toroidal roller bearings and self-aligning ball bearings, which are relubricated from the side, require another design compared to spherical roller bearings, to allow the oil to pass through the bearing. Therefore, SONL housings with the designation suffix RA (→ **page 356**) are recommended.

SONL .. RA housings have two tapped holes in the cap that can be used as oil inlets. For CARB toroidal roller and self-aligning ball bearings, always use the offset oil inlet hole in the housing cap, and two oil outlet holes on the opposite side of the housing, to make sure the oil has to pass through the bearing and to get enough outlet capacity.

Table 7

Abutment dimensions for circulating oil lubrication systems and oil bath lubrication with a pick-up ring

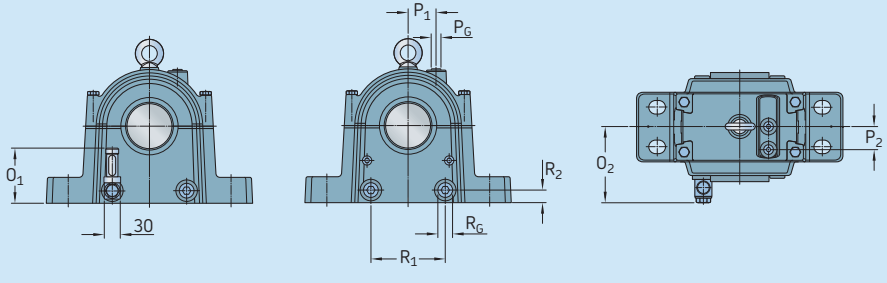

Housing Size	Dimensions P_G	P_1	P_2	R_G	R_1	R_2	O_1	O_2
–	in.	mm		in.	mm			
217-517	G 3/8	47,5	40	G 3/4	118	22	97	138
218-518	G 3/8	50	41	G 3/4	128	22	97	142
220-520	G 3/8	50	47	G 3/4	144	22	97	150
222-522	G 3/8	55	53	G 3/4	162	23	98	163
224-524	G 3/8	55	65	G 3/4	178	25	100	179
226-526	G 3/8	60	69	G 3/4	192	25	120	184
228-528	G 3/8	65	72	G 3/4	200	26	121	187
230-530	G 3/8	65	73	G 3/4	220	26	121	187
232-532	G 3/8	65	78	G 3/4	252	26	121	196
234-534	G 3/4	85	88	G 1.1/2	268	41	136	215
236-536	G 3/4	85	93	G 1.1/2	278	41	136	220
238-538	G 3/4	85	98	G 1.1/2	298	41	166	225
240-540	G 3/4	85	100	G 1.1/2	320	41	166	229
244-544	G 3/4	105	108	G 1.1/2	360	41	166	239
248-548	G 3/4	110	115	G 1.1/2	400	41	216	244

Mounting

SONL plummer (pillow) block housings must be mounted properly using the appropriate tools and state of the art mechanical mounting methods. All the associated components must also meet certain basic requirements (→ *Specifications for shafts and housing support surfaces* on **page 45**).

Mounting instructions for each housing are provided with the seal kit. For information about mounting rolling bearings, refer to the *SKF bearing maintenance handbook* or skf.com/mount.

Torque specifications

Cap bolts should be tightened to the torque values listed in **table 3** on **page 363**. For information about attachment bolts, refer to *Attachment bolt recommendations* on **page 363**.

Pinning or supporting the housing

Some load conditions may require the housing to be pinned to its support surface or a stop to accommodate loads acting parallel to the housing support surface (→ *Additional housing support*, on **page 362**).

Recommendations for the position and size of the holes to accommodate dowel pins are provided in **table 8**. Dimples cast into the housing base mark the recommended positions.

Condition monitoring

SONL plummer (pillow) block housings have appropriate positions for condition monitoring sensors (→ **fig. 16**).

Position 1 is a measurement point perpendicular to the shaft and is in accordance with ISO 10816-1.

Position 2 is a measurement point parallel to the shaft and should be used when loads act toward the support surface.

Table 8

Position and size of dowel pin holes

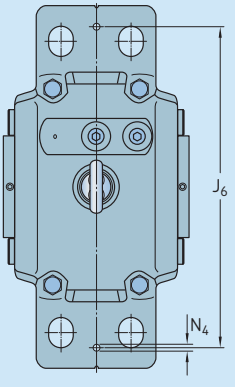

Housing Size	Dimensions J_6	N_4 max
–	mm	
217-517	290	6
218-518	320	8
220-520	350	8
222-522	370	8
224-524	370	8
226-526	390	8
228-528	430	8
230-530	460	12
232-532	480	12
234-534	530	20
236-536	570	20
238-538	640	20
240-540	630	20
244-544	690	20
248-548	800	20

Accessories

Condition monitoring sensors are available for SONL plummer (pillow) block housings.

For additional information, refer to *SKF tools and products* (→ **page 47**).

Ordering information

For SONL plummer (pillow) block housings, each of the following items must be ordered separately:

- housing
- seal kit (see **page 358** for details)
- locating rings
- bearing
- adapter sleeve

Order example

Two plummer block housings are required for two 22224 EK spherical roller bearings on H 3124 adapter sleeves. One housing will accommodate the non-locating bearing at the end of the shaft. The other housing will accommodate the locating bearing on a through shaft. The oil needs to be cooled by two oil cooling tubes per housing.

The following items should be ordered:

- 2 housings SONL 224-524
- 1 seal kit TSO 524
- 1 seal kit TSO 524 A
- 2 locating rings FRB 12/215
- 4 oil cooling tubes AVA 0001/3

Fig. 16

Measurement points for condition monitoring



7.1 SONL plummer block housings for bearings on an adapter sleeve, metric shafts
d_a **75 – 150** mm

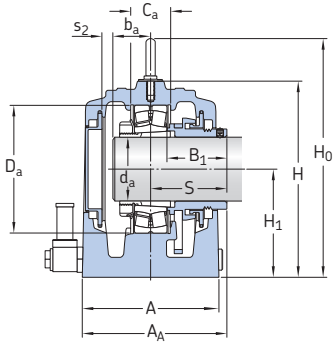

Housing for shaft end

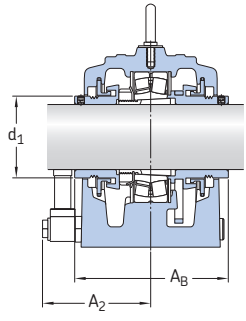

Housing for through shaft

Shaft diameter d_a	**Housing** Designation	**Appropriate parts** Bearing[1]	Adapter sleeve[2]	Locating ring[3]	Seal kit for through shaft[4]	End cover	**Dimensions** Housing A	A_1	A_2	A_A
mm	–	–					mm			
75	**SONL 217-517**	2217 K 22217 EK C 2217 K	H 317 H 317 H 317 E	FRB 5/150 FRB 5/150 FRB 5/150	TSO 517	ECO 217-517	163	110	138	172
80	**SONL 218-518**	2218 K 22218 EK C 2218 K	H 318 H 318 H 318 E	FRB 5/160 FRB 5/160 FRB 5/160	TSO 518	ECO 218-518	170	120	142	180
90	**SONL 220-520**	2220 KM 22220 EK C 2220 K	H 320 H 320 H 320 E	FRB 7/180 FRB 7/180 FRB 7/180	TSO 520	ECO 220-520	186	130	150	196
100	**SONL 222-522**	2222 KM 22222 EK C 2222 K	H 322 H 322 H 322 E	FRB 9/200 FRB 9/200 FRB 9/200	TSO 522	ECO 222-522	213	145	163	221
110	**SONL 224-524**	22224 EK C 2224 K	H 3124 H 3124 L	FRB 12/215 FRB 12/215	TSO 524	ECO 224-524	245	170	179	261
115	**SONL 226-526**	22226 EK C 2226 K	H 3126 H 3126 L	FRB 11/230 FRB 11/230	TSO 526	ECO 226-526	255	180	184	263
125	**SONL 228-528**	22228 CCK/W33 C 2228 K	H 3128 H 3128 L	FRB 11/250 FRB 11/250	TSO 528	ECO 228-528	260	190	187	270
135	**SONL 230-530**	22230 CCK/W33 C 2230 K	H 3130 H 3130 L	FRB 10/270 FRB 10/270	TSO 530	ECO 230-530	260	190	187	270
140	**SONL 232-532**	22232 CCK/W33	H 3132	FRB 12/290	TSO 532	ECO 232-532	278	205	196	297
150	**SONL 234-534**	22234 CCK/W33 C 2234 K	H 3134 H 3134 L	FRB 14/310 FRB 14/310	TSO 534	ECO 234-534	310	230	215	330

[1] 22(00) – self-aligning ball bearing, 222(00) – spherical roller bearing, C ... – CARB toroidal roller bearing
Only typical bearings are listed. Other bearing variants can also fit the housing.
[2] The adapter sleeve fits the bearing in the same line only.
[3] The locating ring fits the bearing in the same line only. Two locating rings are required for each housing.
[4] Seal kits for a shaft end have the designation suffix A, i.e. TSO .. A.

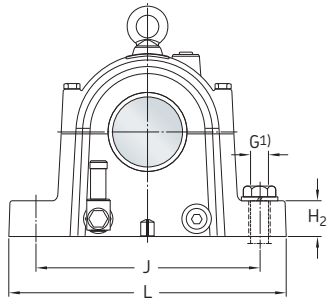

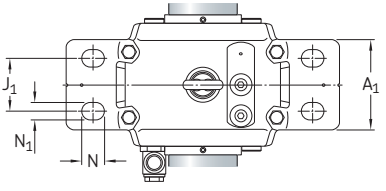

Shaft diameter d_a	**Dimensions** Housing A_B	d_1	B_1	C_a	D_a	b_a	s_2	H	H_0	H_1	H_2	J	J_1	L	N	N_1	S	**Eye bolt** according to DIN 580	**Mass** Housing
mm	mm																	–	kg
75	180	96	72	46	150	40	19	230	283	125	35	260	60	330	28	22	90	M 10	26
80	190	100	75	50	160	42	19	245	298	135	45	290	70	360	28	22	95	M 12	33
90	206	112	80	60	180	46	25	270	323	145	50	320	75	400	32	26	103	M 12	42
100	229	120	88	71	200	52	32,5	290	343	160	50	347	75	420	32	26	114,5	M 12	53
110	276	135	109	82	215	56	47	315	386	170	55	347	90	420	32	26	138	M 16	72
115	270	145	103	86	230	60	43	335	406	180	60	377	100	450	35	28	135	M 16	87
125	280	160	106	90	250	63	42	355	426	190	65	415	100	500	42	35	140	M 20	102
135	280	170	103,5	93	270	67,5	37,5	375	446	200	65	450	115	540	42	35	140	M 20	115
140	316	178	118	104	290	73	42	406	477	215	65	470	120	560	42	35	158	M 20	141
150	350	195	132	114	310	77	54	440	530	235	70	515	130	610	42	35	175	M 24	190

[1] For sizes and tightening torques of the attachment bolts refer to **table 3** on **page 363**.

7.1 SONL plummer block housings for bearings on an adapter sleeve, metric shafts
d_a **160 – 220** mm

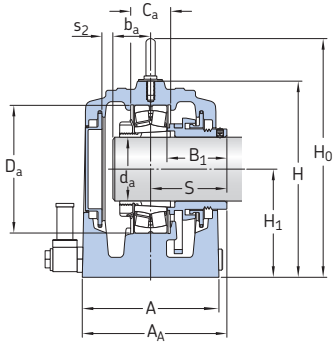

Housing for shaft end

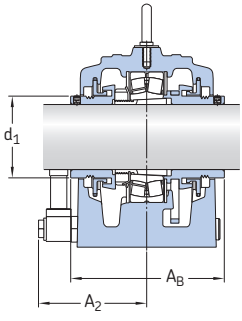

Housing for through shaft

Shaft diameter d_a	**Housing** Designation	**Appropriate parts** Bearing[1]	Adapter sleeve[2]	Locating ring[3]	Seal kit for through shaft[4]	End cover	**Dimensions** Housing A	A_1	A_2	A_A
mm	–	–					mm			
160	**SONL 236-536**	22236 CCK/W33	H 3136	FRB 14/320	TSO 536	ECO 236-536	320	240	220	340
170	**SONL 238-538**	22238 CCK/W33 C 2238 K	H 3138 H 3138	FRB 14/340 FRB 14/340	TSO 538	ECO 238-538	330	250	225	350
180	**SONL 240-540**	22240 CCK/W33	H 3140	FRB 14/360	TSO 540	ECO 240-540	338	260	229	358
200	**SONL 244-544**	22244 CCK/W33 C 2244 K	OH 3144 H OH 3144 H	FRB 14/400 FRB 14/400	TSO 544	ECO 244-544	358	280	239	381
220	**SONL 248-548**	22248 CCK/W33	OH 3148 H	FRB 14/440	TSO 548	ECO 248-548	368	290	244	394

[1] 222(00) – spherical roller bearing, C ... – CARB toroidal roller bearing
Only typical bearings are listed. Other bearing variants can also fit the housing.
[2] The adapter sleeve fits the bearing in the same line only.
[3] The locating ring fits the bearing in the same line only. Two locating rings are required for each housing.
[4] Seal kits for a shaft end have the designation suffix A, i.e. TSO .. A.

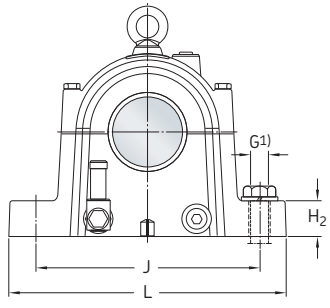

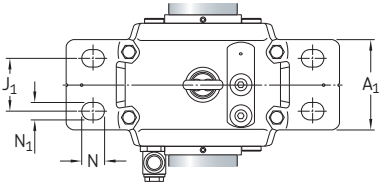

Shaft diameter d_a	**Dimensions** Housing A_B	d_1	B_1	C_a	D_a	b_a	s_2	H	H_0	H_1	H_2	J	J_1	L	N	N_1	S	**Eye bolt** according to DIN 580	**Mass** Housing
mm	mm																	–	kg
160	360	205	137	114	320	78	53,5	455	545	245	75	545	150	650	42	35	180	M 24	213
170	370	220	139	120	340	82	52,5	480	570	260	85	590	150	720	50	42	185	M 24	249
180	378	227	140	126	360	86	51	510	600	275	85	600	160	730	50	42	189	M 24	273
200	404	255	148	136	400	95	50	565	674	305	95	670	180	820	50	42	202	M 24	361
220	420	270	150	148	440	105	45,5	625	734	340	100	740	190	900	50	42	210	M 24	456

[1] For sizes and tightening torques of the attachment bolts refer to **table 3** on **page 363**.

7.2 SONL plummer block housings for bearings on an adapter sleeve, inch shafts

d_a **2 15/16 – 5 3/16** in.
74,613 – 131,763 mm

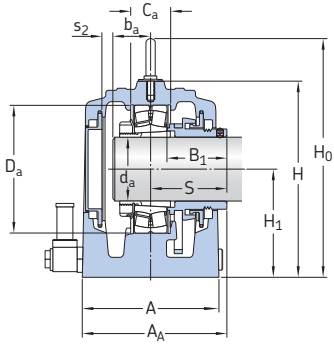

Housing for shaft end

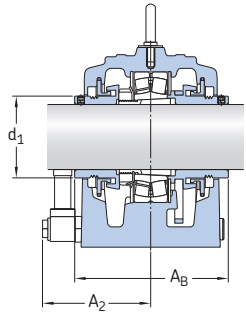

Housing for through shaft

Shaft diameter d_a	**Housing** Designation	**Appropriate parts** Bearing[1]	Adapter sleeve[2]	Locating ring[3]	Seal kit for through shaft[4]	End cover	**Dimensions** Housing A	A_1	A_2	A_A
in./*mm*	–	–					mm			
2 15/16 *74,613*	**SONL 217-517**	2217 K 22217 EK C 2217 K	HA 317 HA 317 HA 317 E	FRB 5/150 FRB 5/150 FRB 5/150	TSO 517/2.15/16	ECO 217-517	163	110	138	172
3 3/16 *80,963*	**SONL 218-518**	2218 K 22218 EK C 2218 K	HA 318 HA 318 HA 318 E	FRB 5/160 FRB 5/160 FRB 5/160	TSO 518/3.3/16	ECO 218-518	170	120	142	180
3 7/16 *87,313*	**SONL 220-520**	2220 KM 22220 EK C 2220 K	HA 320 HA 320 HA 320 E	FRB 7/180 FRB 7/180 FRB 7/180	TSO 520/3.7/16	ECO 220-520	186	130	150	196
3 15/16 *100,013*	**SONL 222-522**	2222 KM 22222 EK C 2222 K	H 322 H 322 H 322 E	FRB 9/200 FRB 9/200 FRB 9/200	TSO 522/3.15/16	ECO 222-522	213	145	163	221
4 3/16 *106,363*	**SONL 224-524**	22224 EK C 2224 K	HA 3124 HA 3124 L	FRB 12/215 FRB 12/215	TSO 524/4.3/16	ECO 224-524	245	170	179	261
4 7/16 *112,713*	**SONL 226-526**	22226 EK C 2226 K	HA 3126 HA 3126 L	FRB 11/230 FRB 11/230	TSO 526/4.7/16	ECO 226-526	255	180	184	263
4 15/16 *125,413*	**SONL 228-528**	22228 CCK/W33 C 2228 K	HA 3128 HA 3128 L	FRB 11/250 FRB 11/250	TSO 528/4.15/16	ECO 228-528	260	190	187	270
5 3/16 *131,763*	**SONL 230-530**	22230 CCK/W33 C 2230 K	HA 3130 HA 3130 L	FRB 10/270 FRB 10/270	TSO 530/5.3/16	ECO 230-530	260	190	187	270

[1] 22(00) – self-aligning ball bearing, 222(00) – spherical roller bearing, C ... – CARB toroidal roller bearing
Only typical bearings are listed. Other bearing variants can also fit the housing.
[2] The adapter sleeve fits the bearing in the same line only.
[3] The locating ring fits the bearing in the same line only. Two locating rings are required for each housing.
[4] Seal kits for a shaft end have the designation suffix A, i.e. TSO .. A.

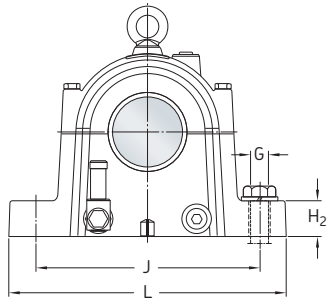

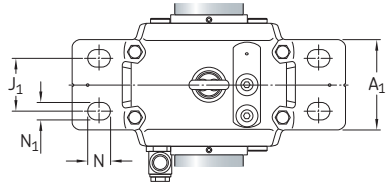

Shaft diameter	**Dimensions** Housing																		**Eye bolt** according to DIN 580	**Mass** Housing
d_a	A_B	d_1	B_1	C_a	D_a	b_a	s_2	H	H_0	H_1	H_2	J	J_1	L	N	N_1	S	G	G	
in./*mm*	mm																		in.	–	kg
2 15/16 *74,613*	180	96	72	46	150	40	19	230	283	125	35	260	60	330	28	22	90	20	3/4	M 10	26
3 3/16 *80,963*	190	100	75	50	160	42	19	245	298	135	45	290	70	360	28	22	95	20	3/4	M 12	33
3 7/16 *87,313*	206	112	80	60	180	47	25	270	323	145	50	320	75	400	32	26	103	24	7/8	M 12	42
3 15/16 *100,013*	229	120	88	71	200	52	32,5	290	343	160	50	347	75	420	32	26	114,5	24	7/8	M 12	53
4 3/16 *106,363*	276	135	109	82	215	56	47	315	386	170	55	347	90	420	32	26	138	24	7/8	M 16	72
4 7/16 *112,713*	270	145	103	86	230	60	43	335	406	180	60	377	100	450	35	28	135	24	1	M 16	87
4 15/16 *125,413*	280	160	106	90	250	63	42	355	426	190	65	415	100	500	42	35	140	30	1 1/4	M 20	102
5 3/16 *131,763*	280	170	103,5	93	270	67,5	37,5	375	446	200	65	450	115	540	42	35	140	30	1 1/4	M 20	115

7.2 SONL plummer block housings for bearings on an adapter sleeve, inch shafts

d_a **5 7/16 – 8 15/16** in.
138,113 – 227,013 mm

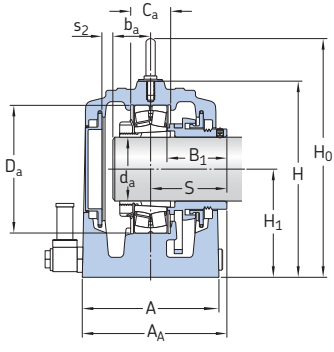

Housing for shaft end

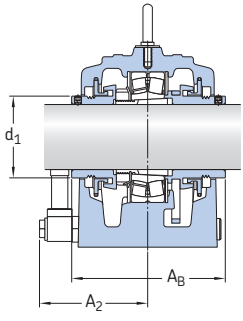

Housing for through shaft

Shaft diameter d_a	**Housing** Designation	**Appropriate parts** Bearing[1]	Adapter sleeve[2]	Locating ring[3]	Seal kit for through shaft[4]	End cover	**Dimensions** Housing A	A_1	A_2	A_A
in./*mm*	–	–					mm			
5 7/16 *138,113*	**SONL 232-532**	22232 CCK/W33	HA 3132	FRB 12/290	TSO 532/5.7/16	ECO 232-532	278	205	196	297
5 15/16 *150,813*	**SONL 234-534**	22234 CCK/W33 C 2234 K	HA 3134 HA 3134 L	FRB 14/310 FRB 14/310	TSO 534/5.15/16	ECO 234-534	310	230	215	330
6 7/16 *163,513*	**SONL 236-536**	22236 CCK/W33	HA 3136	FRB 14/320	TSO 536/6.7/16	ECO 236-536	320	240	220	340
6 15/16 *176,213*	**SONL 238-538**	22238 CCK/W33 C 2238 K	HA 3138 HA 3138	FRB 14/340 FRB 14/340	TSO 538/6.15/16	ECO 238-538	330	250	225	350
7 3/16 *182,563*	**SONL 240-540**	22240 CCK/W33	HA 3140	FRB 14/360	TSO 540/7.3/16	ECO 240-540	338	260	229	358
7 15/16 *201,613*	**SONL 244-544**	22244 CCK/W33 C 2244 K	H 3044/7.15/16 H 3044/7.15/16	FRB 14/400 FRB 14/400	TSO 544/7.15/16	ECO 244-544	358	280	239	381
8 15/16 *227,013*	**SONL 248-548**	22248 CCK/W33	H 3148/8.15/16	FRB 14/440	TSO 548/8.15/16	ECO 248-548	368	290	244	394

[1] 222(00) – spherical roller bearing, C ... – CARB toroidal roller bearing
Only typical bearings are listed. Other bearing variants can also fit the housing.
[2] The adapter sleeve fits the bearing in the same line only.
[3] The locating ring fits the bearing in the same line only. Two locating rings are required for each housing.
[4] Seal kits for a shaft end have the designation suffix A, i.e. TSO .. A.

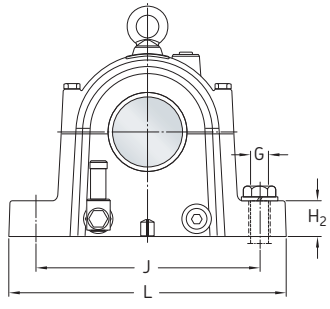

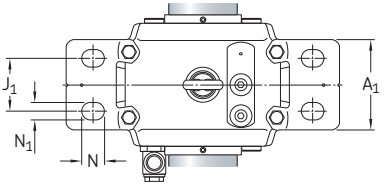

Shaft diameter	**Dimensions** Housing																		**Eye bolt** according to DIN 580	**Mass** Housing
d_a	A_B	d_1	B_1	C_a	D_a	b_a	s_2	H	H_0	H_1	H_2	J	J_1	L	N	N_1	S	G	G	
in./*mm*	mm																		in.	–	kg
5 7/16 *138,113*	316	178	118	104	290	73	42	406	477	215	65	470	120	560	42	35	158	30	1 1/4	M 20	141
5 15/16 *150,813*	350	195	132	114	310	77	54	440	530	235	70	515	130	610	42	35	175	30	1 1/4	M 24	190
6 7/16 *163,513*	360	205	137	114	320	78	53,5	455	545	245	75	545	150	650	42	35	180	30	1 1/4	M 24	213
6 15/16 *176,213*	370	220	139	120	340	82	52,5	480	570	260	85	590	150	720	50	42	185	36	1 1/2	M 24	249
7 3/16 *182,563*	378	227	140	126	360	86	51	510	600	275	85	600	160	730	50	42	189	36	1 1/2	M 24	273
7 15/16 *201,613*	404	255	148	136	400	95	50	565	674	305	95	670	180	820	50	42	202	36	1 1/2	M 24	361
8 15/16 *227,013*	420	270	150	148	440	105	45,5	625	734	340	100	740	190	900	50	42	210	36	1 1/2	M 24	456

7.3 SONL plummer block housings for bearings on a cylindrical seat and a stepped shaft
d_a **85 – 160** mm

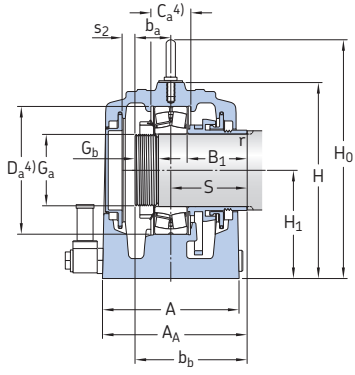

Housing for shaft end

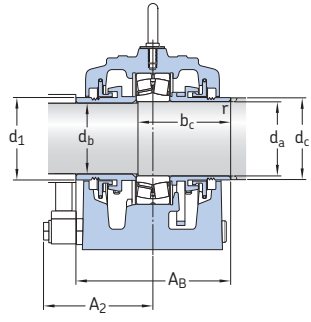

Housing for through shaft

Shaft diameter d_a	Housing Designation	Appropriate parts Bearing[1]	Locating ring[2]	Lock nut	Locking washer	Seal kit for through shaft[3]	End cover	Dimensions Housing A	A_1	A_2	A_A	A_B	d_1
mm	–	–						mm					
85	**SONL 217-517**	2217 22217 E C 2217	FRB 5/150 FRB 5/150 FRB 5/150	KM 17 KM 17 KMFE 17	MB 17 MB 17 –	TSO 217	ECO 217-517	163	110	138	172	180	96
90	**SONL 218-518**	2218 22218 E C 2218	FRB 5/160 FRB 5/160 FRB 5/160	KM 18 KM 18 KMFE 18	MB 18 MB 18 –	TSO 218	ECO 218-518	170	120	142	180	190	100
100	**SONL 220-520**	2220 M 22220 E C 2220	FRB 7/180 FRB 7/180 FRB 7/180	KM 20 KM 20 KMFE 20	MB 20 MB 20 –	TSO 220	ECO 220-520	186	130	150	196	206	112
110	**SONL 222-522**	2222 M 22222 E C 2222	FRB 9/200 FRB 9/200 FRB 9/200	KM 22 KM 22 KMFE 22	MB 22 MB 22 –	TSO 222	ECO 222-522	213	145	163	221	229	120
120	**SONL 224-524**	22224 E C 2224	FRB 12/215 FRB 12/215	KM 24 KML 24	MB 24 MBL 24	TSO 224	ECO 224-524	245	170	179	261	276	135
130	**SONL 226-526**	22226 E C 2226	FRB 11/230 FRB 11/230	KM 26 KML 26	MB 26 MBL 26	TSO 226	ECO 226-526	255	180	184	263	270	145
140	**SONL 228-528**	22228 CC C 2228	FRB 11/250 FRB 11/250	KM 28 KML 28	MB 28 MBL 28	TSO 228	ECO 228-528	260	190	187	270	280	160
150	**SONL 230-530**	22230 CC C 2230	FRB 10/270 FRB 10/270	KM 30 KML 30	MB 30 MBL 30	TSO 230	ECO 230-530	260	190	187	270	280	170
160	**SONL 232-532**	22232 CC	FRB 12/290	KM 32	MB 32	TSO 232	ECO 232-532	278	205	196	297	316	178

1) 22(00) – self-aligning ball bearing, 222(00) – spherical roller bearing, C ... – CARB toroidal roller bearing
Only typical bearings are listed. Other bearing variants can also fit the housing.
2) The locating ring fits the bearing in the same line only. Two locating rings are required for each housing.
3) TSO .. is the seal kit for through shaft. For shaft ends, order TSO .. A. ECO .. is the end cover.
4) For C_a, D_a and eye bolt sizes, refer to **product tables 7.1** and **7.2**.

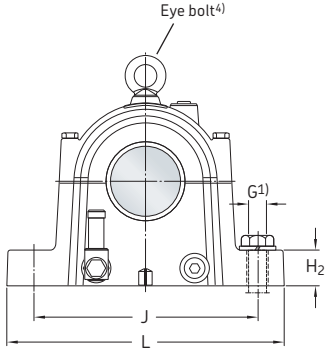

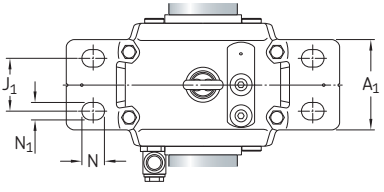

Shaft diameter	Dimensions Housing												Shaft								Mass Housing
d_a	B_1	s_2	H	H_0	H_1	H_2	J	J_1	L	N	N_1	S	b_a	b_b	b_c	d_b	d_c min	G_a	G_b	r	
mm	mm																				kg
85	72	19	230	283	125	35	260	60	330	28	22	90	40	130	105	83	91	M 85×2	24	1,6	26
90	75	19	245	298	135	45	290	70	360	28	22	95	42	137	112	88	96	M 90×2	24	1,6	33
100	80	25	270	323	145	50	320	75	400	32	26	103	46	150	123	98	106	M 100×2	26	1,6	42
110	88	32,5	290	343	160	50	347	75	420	32	26	114,5	52	167	138	108	116	M 110×2	28	1,6	52
120	109	47	315	386	170	55	347	90	420	32	26	138	56	194	164	118	126	M 120×2	29	1,6	70
130	103	43	335	406	180	60	377	100	450	35	28	135	60	195	164	128	138	M 130×2	31	1,6	84
140	106	42	355	426	190	65	415	100	500	42	35	140	63	203	170	138	148	M 140×2	32	1,6	100
150	103,5	37,5	375	446	200	65	450	115	540	42	35	140	68	207,5	173	148	158	M 150×2	34	1,6	113
160	118	42	406	477	215	65	470	120	560	42	35	158	73	231	195	158	168	M 160×3	36	1,6	136

1) For sizes and tightening torques of the attachment bolts refer to **table 3** on **page 363**.

7.3 SONL plummer block housings for bearings on a cylindrical seat and a stepped shaft
d_a **170 – 240** mm

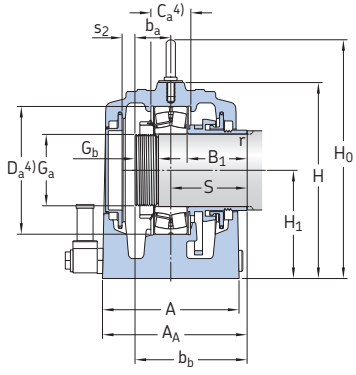

Housing for shaft end

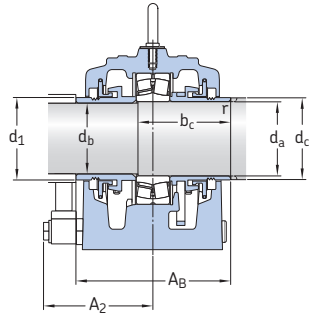

Housing for through shaft

Shaft diameter d_a	Housing Designation	Appropriate parts Bearing[1]	Locating ring[2]	Lock nut	Locking washer	Seal kit for through shaft[3]	End cover	Dimensions Housing A	A_1	A_2	A_A	A_B
mm	–	–						mm				
170	**SONL 234-534**	22234 CC/W33 C 2234	FRB 14/310 FRB 14/310	KM 34 KML 34	MB 34 MBL 34	TSO 234	ECO 234-534	310	230	215	330	350
180	**SONL 236-536**	22236 CC/W33	FRB 14/320	KM 36	MB 36	TSO 236	ECO 236-536	320	240	220	340	360
190	**SONL 238-538**	22238 CC/W33 C 2238	FRB 14/340 FRB 14/340	KM 38 KML 38	MB 38 MBL 38	TSO 238	ECO 238-538	330	250	225	350	370
200	**SONL 240-540**	22240 CC/W33	FRB 14/360	KM 40	MB 40	TSO 240	ECO 240-540	338	260	229	358	378
220	**SONL 244-544**	22244 CC/W33 C 2244	FRB 14/400 FRB 14/400	HM 44 T HM 44 T	MB 44 MB 44	TSO 244	ECO 244-544	358	280	239	381	404
240	**SONL 248-548**	22248 CC/W33	FRB 14/440	HM 48 T	MB 48	TSO 248	ECO 248-548	368	290	244	394	420

1) 222(00) – spherical roller bearing, C ... – CARB toroidal roller bearing
Only typical bearings are listed. Other bearing variants can also fit the housing.
2) The locating ring fits the bearing in the same line only. Two locating rings are required for each housing.
3) Seal kits for a shaft end have the designation suffix A, i.e. TSO .. A.
4) The values for C_a and D_a can be found, for each housing size, in **product tables 7.1** and **7.2**.

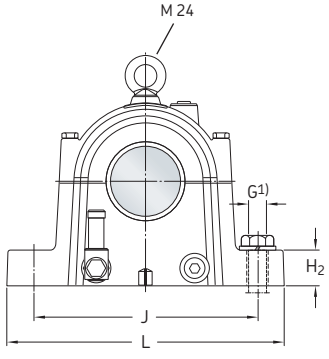

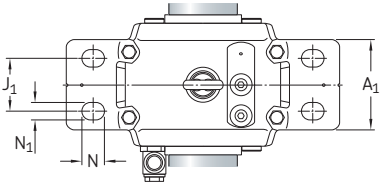

Shaft diameter	Dimensions Housing												Shaft								Mass Housing
d_a	d_1	B_1	s_2	H	H_0	H_1	H_2	J	J_1	L	N	N_1	S	b_a	b_b	b_c	d_b	d_c min	G_a	G_b	r	
mm	mm																					kg
170	195	132	54	440	530	235	70	515	130	610	42	35	175	77	252	213	168	180	M 170×3	38	3	185
180	205	137	53,5	455	545	245	75	545	150	650	42	35	180	78	258	223	177	196	M 180×3	39	4	208
190	220	139	52,5	480	570	260	85	590	150	720	50	42	185	82	267	231	188	208	M 190×3	40	4	244
200	227	140	51	510	600	275	85	600	160	730	50	42	189	86	275	233	198	218	M 200×3	41	4	267
220	255	148	50	565	674	305	95	670	180	820	50	42	202	95	297	256	218	238	Tr 220×4	45	4	355
240	270	150	45,5	625	734	340	100	740	190	900	50	42	210	105	315	270	238	258	Tr 240×4	49	4	450

[1] For sizes andtightening torques of the attachment bolts refer to **table 3** on **page 363**.

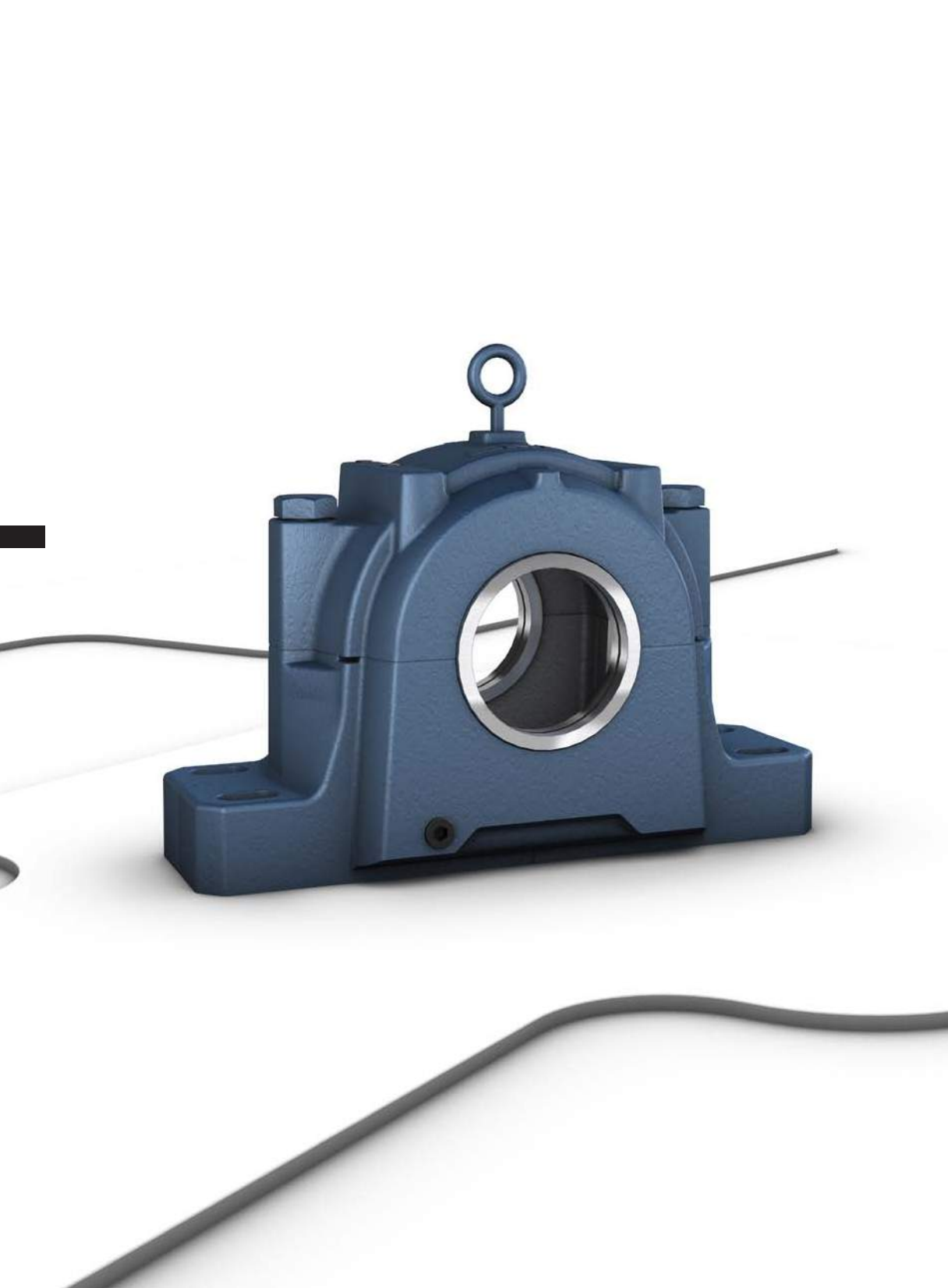

Split pillow blocks SAF and SAW series (inch dimensions)

Bearing types
- Spherical roller bearings (SAF and SAW)
- Self-aligning ball bearings (SAF)
- CARB toroidal roller bearings (SAF)

Bearing dimension series
- 12, 13, 22, 23, 30 (SAF)
- 22, 32 (SAW)

Shaft diameter range
- 1 3/16 to 10 1/2 in. (SAF)
- 3 3/16 to 7 15/16 in. (SAW)

Typical shaft-bearing combinations
- Plain shaft with bearing on an adapter sleeve
- Stepped shaft with bearing on a cylindrical seat

Seals
- Labyrinth
- Contact
- Heavy-duty

Lubrication
- Grease
- Oil

Materials
- Grey cast iron
- Cast steel
- Spheroidal graphite cast iron

Mounting
- Two-bolt mounting
- Four-bolt mounting

SAF and SAW split pillow (plummer) block housings are popular SKF bearing housings with inch dimensions, developed to be the first choice for design, quality and economy.

SAF and SAW housings enable the incorporated bearings to achieve maximum service life with less need for maintenance. Different housing variants and seal designs are available, making the use of tailored housings virtually unnecessary and enabling cost-effective bearing arrangements.

Units of measurement
In this chapter only imperial units are used. To convert imperial units to metric units, refer to the conversion table on **page 10**.

Split pillow blocks SAF and SAW series (inch dimensions)

Designations 385

Standard housing design 386
Features and benefits 387
Housing material 387
Paint, corrosion protection 387

Housing variants 388
Housing material 388

Sealing solutions 389
Labyrinth seals 400
Labyrinth rings with an internal contact element 400
Taconite heavy-duty seals 400
Contact seals 400
End plugs 400

Using sealed bearings 401

Special seals 401
High-temperature seals 401
High-speed seals 401

Design considerations 402
Typical shaft-bearing combinations . . . 402
Locating and non-locating bearing positions 402
Load carrying capacity 403
Operating temperature 407
Operating speed 407
Shaft specifications 408
Attachment bolt recommendations 408

Lubrication 408
Initial grease fill 408
Relubrication 410
Oil lubrication 411

Mounting 414
Cap bolt torque specifications 414
Pinning or supporting the housing 414

Condition monitoring 415

Accessories 415

Ordering information 416

Product tables
8.1 SAF pillow blocks with self-aligning ball bearings on an adapter sleeve (Series 15(00), 16(00)) 418
8.2 SAF and SAW pillow blocks with spherical roller bearings on an adapter sleeve (Series 225(00), 226(00), 230(00)KA, 235(00)) . . . 422
8.3 SAF pillow blocks with CARB bearings on an adapter sleeve (Series C25(00), C26(00), C30(00)KA) 430
8.4 SAF pillow blocks with self-aligning ball bearings with a cylindrical bore (Series 13(00)) 434
8.5 SAF and SAW pillow blocks with spherical roller bearings with a cylindrical bore (Series 222(00), 223(00), 232(00)) 436
8.6 SAF pillow blocks with CARB bearings with a cylindrical bore (Series C22(00), C23(00)) 444

Designations

Designation system for SAF and SAW pillow (plummer) blocks

_SAF _22634 TA

Prefix for bolt holes

F	Four-bolt base (SAF housings)

Series

S	Standard pillow block housing
A	Inch dimensions
F	Labyrinth seal
W	Wide bearing seat
B	Pillow block with sealed bearing

Material

–	Cast iron (standard)
D	Ductile iron
S	Cast steel

Size identification

13(00)	Kits with self-aligning ball bearings with a cylindrical bore, diameter series 3
15(00)	Kits with self-aligning ball bearings on an adapter sleeve, diameter series 2
16(00)	Kits with self-aligning ball bearings on an adapter sleeve, diameter series 3
222(00)	Kits with spherical roller bearings with a cylindrical bore, diameter series 2
223(00)	Kits with spherical roller bearings with a cylindrical bore, diameter series 3
225(00)	Kits with spherical roller bearings on an adapter sleeve, diameter series 2
226(00)	Kits with spherical roller bearings on an adapter sleeve, diameter series 3
230(00)	Kits with spherical roller bearings on an adapter sleeve, diameter series 0
232(00)	Kits with spherical roller bearings with a cylindrical bore, diameter series 2
235(00)	Kits with spherical roller bearings on an adapter sleeve, diameter series 2
C22(00)	Kits with CARB toroidal roller bearings with a cylindrical bore, diameter series 2
C23(00)	Kits with CARB toroidal roller bearings with a cylindrical bore, diameter series 3
C25(00)	Kits with CARB toroidal roller bearings on an adapter sleeve, diameter series 2
C26(00)	Kits with CARB toroidal roller bearings on an adapter sleeve, diameter series 3
C30(00)	KA Kits with CARB toroidal roller bearings on an adapter sleeve, diameter series 0
..(00)	Size code of the bearing, (00) x 5 = bearing bore diameter [mm]

Suffixes[1)]

T	Taconite seal with contact element
TV	Taconite seal with V-ring
TA or TVA	Taconite seal with button head grease fitting
TB or TVB	Taconite seal with giant button head grease fitting
TLC	PosiTrac Plus seal
Y	One end closed (i.e. supplied with end plug)
-11	Four-bolt base (cast steel SAFS only)
/VZ...	Special feature / modification

[1)] When multiple suffixes are used, they are listed in the same order as shown here.

Standard housing design

SAF and SAW housings are split pillow (plummer) block housings consisting of a cap and base. SAF housings have two or four holes cast into the base for attachment bolts. SAW housings have four cast holes.

SAF housings are available in two designs depending on the series. The designs share the same dimensions. SAF housings in the 2(00) and 5(00) series follow the M5 design (→ **fig. 1**), while housings in the 3(00) and 6(00) series follow the A design (→ **fig. 2**).

SAF and SAW (→ **fig. 3**) housings share the same external dimensions, except for the width of a few SAW sizes. These housings are wider to accommodate wider 32 series bearings or to accomodate the larger axial displacement of bearings in the 22 series.

Fig. 1

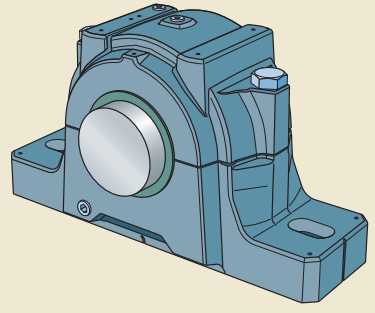

Fig. 2

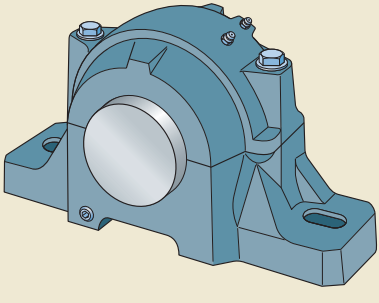

Fig. 3

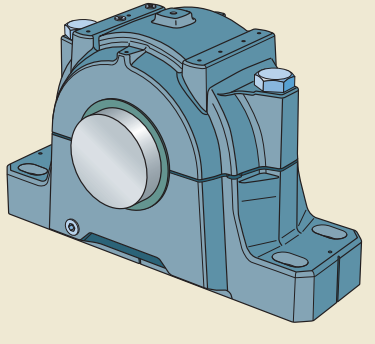

Features and benefits

SAF and SAW housings share some of the following features and benefits:

Simple mounting and dismounting

To simplify mounting and make alignment more accurate, the feet of SAF and SAW housings have a flat, square design.

To make it easier to separate the cap and base, pry slots are cast into the housing. Smaller sizes have sphered dowel pins to further ease cap removal.

Mounting instructions are supplied with each housing.

Caps and bases individually marked

The housing base and cap are matched during manufacture and are not interchangeable with the caps and bases of other housings. To help avoid mismatch, each cap and base are numbered (→ **fig. 4**).

Grease or oil lubrication

These housings are designed to accommodate both grease and oil lubrication. The sump in the housing base acts as a reservoir to provide an adequate quantity of grease or oil.

Fig. 4

Individually marked cap and base

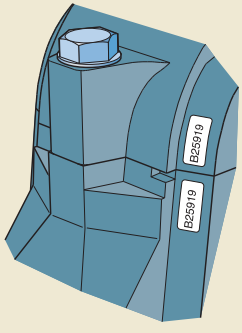

Housing material

SAF and SAW housings are made of grey cast iron.

Paint, corrosion protection

SAF and SAW pillow block housings are painted blue (RAL 5001) using a water based alkyd/acryl paint. The paint protects the housing in accordance with ISO 12944-2, corrosivity category C2 (i.e. exterior atmospheres with low level of pollution, interior atmospheres where condensation may occur). The paint is not affected by most lubricating or engine oils, cutting fluids or alkalescent washing chemicals. Housings can be repainted with most water or solvent based 1- or 2-component paints.

Special paints or preservatives can be supplied on request. Unpainted surfaces are protected by a solventless rust inhibitor.

Housing variants

In addition to standard design SAF and SAW pillow (plummer) block housings, a number of variants are also available. Additional features include:

- milled foot pads to provide a uniform flat surface for fasteners
- special machining for lubrication and condition monitoring systems
- different bearing seat tolerance classes
- special seals
- machined base ends, to enable precision positioning

For additional information contact the SKF application engineering service.

Housing material

For applications where extra strength is needed, SAF housings are also available in cast steel, designation SAFS. Check availability prior to ordering. Cast steel housings come in three different designs. The different designs share the same dimensions as SAF housings made of grey cast iron.

SAF housings are also available in ductile iron (spheroidal graphite cast iron), designation SAFD, from size 509 to 544 and from size 215 to 244. For additional information, contact the SKF application engineering service.

Sealing solutions

SAF and SAW pillow (plummer) block housings are available with different standard sealing solutions (→ **fig. 5**):

- labyrinth seals (standard or PosiTrac)
- labyrinth seals with internal contact element (PosiTrac Plus)
- taconite heavy-duty seals
- contact seals
- end plugs (end covers)

Table 1, **page 390** provides an overview of the characteristics and suitability of each sealing solution. Details are provided in the following text. This information should be used as a guideline, which cannot substitute for testing a seal in its application. **Table 2** on **page 392** provides an overview about which seals fit what housing.

Fig. 5

Standard sealing solutions for SAF and SAW pillow block housings

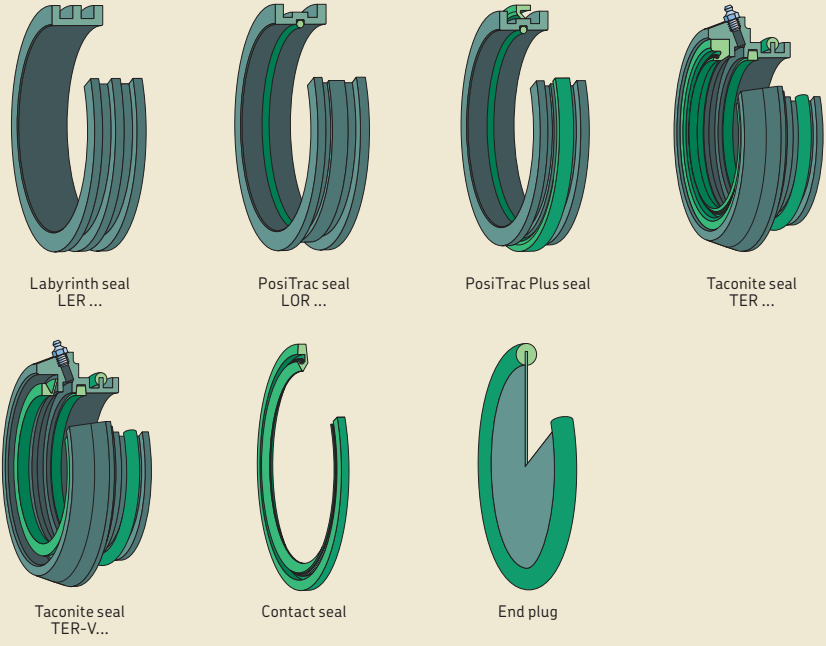

Standard seals for SAF and SAW housings

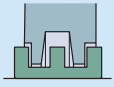
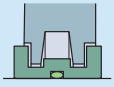


Seal			
Type	Labyrinth	PosiTrac	PosiTrac Plus
Designation	LER	LOR	LOR and B-10724
Material	aluminum	aluminum and nitrile rubber	aluminum and nitrile rubber
Application conditions and requirements			
Temperature [°F]	–30 to 300	–30 to 220	–30 to 220
Max. circumferential speed	same as bearing	same as bearing	limited
Misalignment [°]	0.3	0.3	0.3
Low friction	++	++	+
Axial shaft displacement	++	+	–
Vertical arrangement	–	–	++
Grease relubrication	+	+	+
Oil lubrication	–	–	++
Replacement	–	–	–
Sealing suitability			
Dust	–	–	+
Fine particles	–	–	+
Coarse particles	+	+	+
Chips	+	+	–
Liquids when sprayed	– –	– –	–
Direct sunlight	+	+	+

Symbols: n/a not applicable, ++ very suitable, + suitable, – limited suitability, – – unsuitable

Table 1

		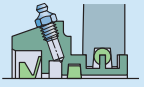	
Contact	Taconite	Taconite (V-ring seal)	End plug
B-9784	TER	TER V	EPR
nitrile rubber	steel, felt and nitrile rubber	steel, felt and nitrile rubber	steel and nitrile rubber
–30 to 220	–30 to 220	–30 to 220	–30 to 220
limited	limited	limited	n/a
0.1	0.1	0.5	n/a
–	– –	– –	n/a
+	+	–	n/a
++	++	++	++
+	++	++	n/a
++	+	+	++
+	+	+	+
+	++	++	+
+	++	++	+
+	++	++	+
–	++	++	–
–	+	+	+
+	+	+	+

8

Seal chart for SAF and SAW housings

Shaft diameter	d_a 0(00) Series	d_a 5(00) Series	d_a 6(00) Series	d_b 2(00) Series	d_c 2(00) Series	d_b 3(00) Series	d_c 3(00) Series	Labyrinth seal[1] Ring seal	O-ring for LOR[2]
in.	–								
1 1/8		507						LER-13	–
1 3/16		507*						LER-14	–
1 1/4		507						LER-15	–
1 3/8		509	609					LER-16	–
1 7/16		509*	609*				308*	LER-17	–
1 1/2		509	609					LER-18	–
1 5/8		510	610					LER-19	–
1 11/16		510*	610*				309*	LER-20	–
1 3/4		510	610					LER-21	–
1 13/16		511	611					LER-22	–
1 7/8		511	611				310*	LER-23	–
1 15/16		511*	611*			308*		LER-24	–
2		511	611					LER-25	–
2		513						LER-26	–
2 1/16		513					311*	LER-27	–
2 1/8		513				309*		LER-28	–
2 1/8			613				312	LOR-31	AS-568-034
2 3/16		513*						LER-29	–
2 3/16			613*				312	LOR-32	AS-568-035
2 1/4		513						LER-30	–
2 1/4			613				312*	LOR-33	AS-568-035
2 5/16				210		310		LER-34	–
2 3/8				210		310*		LER-35	–
2 3/8		515	615		213		313	LOR-36	AS-568-036
2 7/16		515*	615*		213*		313*	LOR-37	AS-568-037
2 1/2						311		LER-39	–
2 1/2		515	615		213		313	LOR-38	AS-568-037
2 9/16						311*		LER-40	–
2 9/16		516	616				314	LOR-42	AS-568-038
2 5/8						311		LER-41	–
2 5/8		516	616				314*	LOR-43	AS-568-038
2 11/16		516*	616*				314	LOR-44	AS-568-039
2 3/4		516	616				314	LOR-45	AS-568-039
2 13/16			617					LOR-182	AS-568-149
2 13/16					215*	312	315*	LOR-46	AS-568-040
2 13/16		517		213	216	313		LOR-51	AS-568-040
2 3/16							316	LOR-57	AS-568-150
2 7/8			617					LOR-183	AS-568-150
2 7/8					215	312*	315	LOR-47	AS-568-040
2 7/8		517		213	216	313		LOR-52	AS-568-040
2 7/8							316	LOR-58	AS-568-150
2 15/16			617*					LOR-184	AS-568-151

The table continues on next spread.

* = Standard shaft diameter, all others are optional shaft diameters
1) Speed rating is the same as bearing speed rating
2) O-ring supplied with LOR is for replacement only, AS-568-### are industry standard O-rings available at most SKF authorized distributors

Table 2

Contact seal[3]	Speed limit[4]	Taconite seals with contact seal[5]	with V-ring seal	Speed limit [4]	End plug
	r/min	–		r/min	–
–	–	TER-13	TER-13 V	2 250	EPR-2
–	–	TER-14	TER-14 V	2 250	EPR-2
–	–	TER-15	TER-15 V	2 250	EPR-2
–	–	TER-16	TER-16 V	2 175	EPR-3
B-9784-12	3 800	TER-17	TER-17 V	2 175	EPR-3
–	–	TER-18	TER-18 V	2 175	EPR-3
–	–	TER-19	TER-19 V	1 800	EPR-4
B-9784-15	3 400	TER-20	TER-20 V	1 800	EPR-4
–	–	TER-21	TER-21 V	1 800	EPR-4
–	–	TER-22	TER-22 V	1 575	EPR-5
–	–	TER-23	TER-23 V	1 575	EPR-5
B-9784-19	2 950	TER-24	TER-24 V	1 575	EPR-5
–	–	TER-25	TER-25 V	1 575	EPR-5
B-9784-21	2 950	TER-26	TER-26 V	1 450	EPR-6
–	–	TER-27	TER-27 V	1 450	EPR-6
–	–	TER-28	TER-28 V	1 450	EPR-6
B-10724-32	2 600	TER-31	TER-31 V	1 400	EPR-7
B-9784-24	2 600	TER-29	TER-29 V	1 400	EPR-6
B-10724-32	2 600	TER-32	TER-32 V	1 400	EPR-7
–	-	TER-30	TER-30 V	1 400	EPR-6
B-10724-32	2 600	TER-33	TER-33 V	1 075	EPR-7
–	–	TER-34	TER-34 V	1 300	–
–	–	TER-35	TER-35 V	1 300	–
B-10724-37	2 350	TER-36	TER-36 V	1 250	EPR-7
B-10724-37	2 350	TER-37	TER-37 V	1 250	EPR-7
B-9784-37	–	TER-39	TER-39 V	1 250	–
B-10724-37	2 350	TER-38	TER-38 V	1 250	EPR-7
B-9784-35	–	TER-40	TER-40 V	1 200	–
B-10724-44	2 150	TER-42	TER-42 V	1 150	EPR-8
–	–	TER-41	TER-41 V	1 150	–
B-10724-44	2 150	TER-43	TER-43 V	1 150	EPR-8
B-10724-44	2 150	TER-44	TER-44 V	1 150	EPR-8
B-10724-44	2 150	TER-45	TER-45 V	1 150	EPR-8
B-10724-184	1 950	TER-182	TER-182 V	1 050	EPR-10
B-10724-44	2 150	TER-46	TER-46 V	900	EPR-8
B-10724-53	1 950	TER-51	TER-51 V	1 050	EPR-9
B-10724-184	1 900	TER-57	TER-57 V	850	EPR-10
B-10724-184	1 950	TER-183	TER-183 V	1 050	EPR-10
B-10724-44	2 150	TER-47	TER-47 V	1 075	EPR-8
B-10724-53	1 950	TER-52	TER-52 V	1 050	EPR-9
B-10724-184	1 900	TER-58	TER-58 V	850	EPR-10
B-10724-184	1 950	TER-184	TER-184 V	1 050	EPR-10

[3] B-10724-### 's are the SKF PosiTrac Plus seal and require the LOR
[4] For stepped shaft housing designs, the largest shaft diameter is the speed limit
[5] Most taconite seals and all V-ring versions are made to order, contact SKF for availabilty

Seal chart for SAF and SAW housings

Shaft diameter	d_a 0(00) Series	d_a 5(00) Series	d_a 6(00) Series	d_b 2(00) Series	d_c 2(00) Series	d_b 3(00) Series	d_c 3(00) Series	Labyrinth seal[1)] Ring seal	O-ring for LOR[2)]
in.	–								
2 15/16		517*		213	216	313		LOR-53	AS-568-141
2 15/16							316	LOR-59	AS-568-151
3			617					LOR-185	AS-568-151
3		517		213	216*	313		LOR-54	AS-568-041
3							316*	LOR-60	AS-568-151
3 1/16		518	618				317	LOR-186	38309-186
3 1/16				213*	216	313*		LOR-55	38309-55
3 1/16					217			LOR-61	38309-61
3 1/8		518	618				317	LOR-187	AS-568-152
3 1/8				213	216	313		LOR-56	AS-568-042
3 1/8					217	314		LOR-62	AS-568-042
3 3/16		518*	618*				317*	LOR-188	AS-568-152
3 3/16					217*	314		LOR-63	AS-568-042
3 1/4		518	618				317	LOR-189	AS-568-152
3 1/4					217	314*		LOR-64	AS-568-042
3 5/16		520	620		220			LOR-100	38309-100
3 5/16					217			LOR-65	38309-65
3 5/16					218		318	LOR-190	38309-190
3 3/8				215/216		315		LOR-78	AS-568-043
3 3/8					217			LOR-66	AS-568-043
3 3/8		520	620		220			LOR-101	AS-568-153
3 3/8					218*		318*	LOR-191	AS-568-153
3 7/16				215*/216		315*		LOR-79	AS-568-043
3 7/16		520*	620*		220			LOR-102	AS-568-153
3 1/2				215/216		315		LOR-80	AS-568-043
3 1/2		520	620		220			LOR-103	AS-568-153
3 9/16				215/216		315		LOR-81	38309-81
3 9/16						316		LOR-83	38309-83
3 5/8				215/216*		315		LOR-82	AS-568-044
3 5/8						316*		LOR-84	AS-568-154
3 11/16						316		LOR-85	AS-568-154
3 11/16							320	LOR-104	AS-568-154
3 3/4						316		LOR-86	AS-568-154
3 3/4							320	LOR-105	AS-568-154
3 13/16						316		LOR-87	38309-87
3 13/16					320*	220*		LOR-106	38309-106
3 13/16		522	622			317		LOR-107	38309-107
3 7/8		522	622			317		LOR-108	AS-568-155
3 7/8				217				LOR-88	AS-568-045
3 15/16		522*	622*			317*		LOR-109	AS-568-155
3 15/16				217*				LOR-89	AS-568-045
4		522	622			317		LOR-110	AS-568-155

The table continues on next spread.

* = Standard shaft diameter, all others are optional shaft diameters
1) Speed rating is the same as bearing speed rating
2) O-ring supplied with LOR is for replacement only, AS-568-### are industry standard O-rings available at most SKF authorized distributors

cont. Table 2

Contact seal[3]	Speed limit[4]	Taconite seals with contact seal[5]	with V-ring seal	Speed limit [4]	End plug
	r/min	–		r/min	–
B-10724-53	1 950	TER-53	TER-53 V	1 050	EPR-9
B-10724-184	1 900	TER-59	TER-59 V	850	EPR-10
B-10724-184	1 950	TER-185	TER-185 V	1 050	EPR-10
B-10724-53	1 950	TER-54	TER-54 V	850	EPR-9
B-10724-184	1 900	TER-60	TER-60 V	850	EPR-10
B-10724-188	1 800	TER-186	TER-186 V	950	EPR-11
B-10724-53	1 950	TER-55	TER-55 V	1 000	EPR-9
B-10724-64	1 450	TER-61	TER-61 V	775	EPR-9
B-10724-188	1 800	TER-187	TER-187 V	950	EPR-11
B-10724-53	1 950	TER-56	TER-56 V	1 000	EPR-9
B-10724-64	1 450	TER-62	TER-62 V	775	EPR-9
B-10724-188	1 800	TER-188	TER-188 V	950	EPR-11
B-10724-64	1 450	TER-63	TER-63 V	775	EPR-9
B-10724-188	1 800	TER-189	TER-189 V	950	EPR-11
B-10724-64	1 450	TER-64	TER-64 V	925	EPR-9
B-10724-102	1 650	TER-100	TER-100 V	900	EPR-12
B-10724-64	1 450	TER-65	TER-65 V	775	EPR-9
B-10724-188	1 800	TER-190	TER-190 V	750	EPR-11
B-10724-79	1 650	TER-78	TER-78 V	900	–
B-10724-64	1 450	TER-66	TER-66 V	775	EPR-9
B-10724-102	1 650	TER-101	TER-101 V	900	EPR-12
B-10724-188	1 800	TER-191	TER-191 V	750	EPR-11
B-10724-79	1 450	TER-79	TER-79 V	900	–
B-10724-102	1 650	TER-102	TER-102 V	900	EPR-12
B-10724-79	1 450	TER-80	TER-80 V	900	–
B-10724-102	1 650	TER-103	TER-103 V	900	EPR-12
B-10724-79	1 450	TER-81	TER-81 V	900	–
B-10724-106	1 275	TER-83	TER-83 V	850	EPR-12
B-10724-79	1 450	TER-82	TER-82 V	850	–
B-10724-106	1 275	TER-84	TER-84 V	850	EPR-12
B-10724-106	1 275	TER-85	TER-85 V	850	EPR-12
B-10724-106	1 275	TER-104	TER-104 V	675	EPR-12
B-10724-106	1 275	TER-86	TER-86 V	850	EPR-12
B-10724-106	1 275	TER-105	TER-105 V	675	EPR-12
B-10724-106	1 275	TER-87	TER-87 V	850	EPR-12
B-10724-106	1 275	TER-106	TER-106 V	675	EPR-12
B-10724-109	1 450	TER-107	TER-107 V	775	EPR-13
B-10724-109	1 450	TER-108	TER-108 V	775	EPR-13
B-10724-89	1 450	TER-88	TER-88 V	775	–
B-10724-109	1 450	TER-109	TER-109 V	775	EPR-13
B-10724-89	1 450	TER-89	TER-89 V	775	–
B-10724-109	1 450	TER-110	TER-110 V	775	EPR-13

[3] B-10724-### 's are the SKF PosiTrac Plus seal and require the LOR
[4] For stepped shaft housing designs, the largest shaft diameter is the speed limit
[5] Most taconite seals and all V-ring versions are made to order, contact SKF for availabilty

Seal chart for SAF and SAW housings

Shaft diameter	d_a 0(00) Series	d_a 5(00) Series	d_a 6(00) Series	d_b 2(00) Series	d_c 2(00) Series	d_b 3(00) Series	d_c 3(00) Series	Labyrinth seal[1] Ring seal	O-ring for LOR[2]
in.	–								
4				217				LOR-90	AS-568-045
4 1/16	024	524	624	218	222	318	322	LOR-111	38309-111
4 1/8	024	524	624	218*	222	318*	322	LOR-112	AS-568-156
4 3/16	024*	524*	624*	218	222*	318	322*	LOR-113	AS-568-156
4 1/4	024	524	624	218	222	318	322	LOR-114	AS-568-156
4 5/16	026	526	626	220	224	320	324	LOR-115	38309-115
4 3/8	026	526	626	220	224	320	324	LOR-116	AS-568-157
4 7/16	026*	526*	626*	220	224	320	324	LOR-117	AS-568-157
4 1/2	026	526	626	220*	224	320*	324	LOR-118	AS-568-157
4 9/16				220	224*	320	324*	LOR-119	38309-119
4 13/16	028	528	628	222	226	322	326	LOR-120	38309-120
4 7/8	028	528	628	222*	226	322*	326	LOR-121	AS-568-159
4 15/16	028*	528*	628*	222	226*	322	326*	LOR-122	AS-568-159
5 1/8	030	530	630	224	228	324	328	LOR-124	AS-568-160
5 3/16	030*	530*	630*	224	228	324	328	LOR-125	AS-568-160
5 1/4	030	530	630	224	228	324	328	LOR-126	AS-568-160
5 5/16	030			224*	228*	324*	328*	LOR-127	38309-127
5 3/8	30			224	228	324	328	LOR-128	AS-568-161
5 3/8	032	532	632					LOR-129	AS-568-253
5 7/16	032*	532*	632*					LOR-130	AS-568-254
5 1/2	032	532	632					LOR-131	AS-568-254
5 5/8				226	230	326	330	LOR-132	AS-568-162
5 11/16				226	230	326	330	LOR-133	AS-568-162
5 3/4				226	230*	326	330*	LOR-134	AS-568-162
5 13/16	034	534	634		232		332	LOR-138	AS-568-257
5 13/16				226	230	326	330	LOR-135	38309-135
5 7/8	034	534	634		232		332	LOR-139	AS-568-257
5 7/8				226*	230	326*	330	LOR-136	AS-568-163
5 15/16	034*	534*	634*		232		332	LOR-140	AS-568-258
5 15/16				226	230	326	330	LOR-137	AS-568-163
6	034	534	634		232		332	LOR-141	AS-568-258
6 1/16					232*		332*	LOR-142	38309-142
6 3/16				228		328		LOR-143	AS-568-164
6 1/4				228*		328*		LOR-144	AS-568-164
6 5/16				228		328		LOR-145	38309-145
6 5/16	036	536			234		334	LOR-146	38309-146
6 3/8	036	536			234		334	LOR-147	AS-568-260
6 7/16	036*	536*			234		334*	LOR-148	AS-568-260
6 1/2	036	536			234		334	LOR-149	AS-568-260
6 9/16				230		330		LOR-150	38309-150

The table continues on next spread.

* = Standard shaft diameter, all others are optional shaft diameters
1) Speed rating is the same as bearing speed rating
2) O-ring supplied with LOR is for replacement only, AS-568-### are industry standard O-rings available at most SKF authorized distributors

cont. Table 2

Contact seal[3]	Speed limit[4]	Taconite seals with contact seal[5]	with V-ring seal	Speed limit [4]	End plug
	r/min	–		r/min	–
B-10724-89	1 450	TER-90	TER-90 V	775	–
B-10724-113	1 350	TER-111	TER-111 V	750	EPR-14
B-10724-113	1 350	TER-112	TER-112 V	750	EPR-14
B-10724-113	1 350	TER-113	TER-113 V	725	EPR-14
B-10724-113	1 350	TER-114	TER-114 V	725	EPR-14
B-10724-117	1 300	TER-115	TER-115 V	700	EPR-15
B-10724-117	1 300	TER-116	TER-116 V	700	EPR-15
B-10724-117	1 300	TER-117	TER-117 V	700	EPR-15
B-10724-117	1 300	TER-118	TER-118 V	675	EPR-15
B-10724-117	1 300	TER-119	TER-119 V	675	EPR-15
B-10724-122	1 150	TER-120	TER-120 V	625	EPR-27
B-10724-122	1 150	TER-121	TER-121 V	625	EPR-27
B-10724-122	1 150	TER-122	TER-122 V	625	EPR-27
B-10724-125	1 075	TER-124	TER-124 V	590	EPR-16
B-10724-125	1 075	TER-125	TER-125 V	590	EPR-16
B-10724-125	1 075	TER-126	TER-126 V	575	EPR-16
B-10724-125	1 075	TER-127	TER-127 V	575	EPR-16
B-10724-125	1 075	TER-128	TER-128 V	575	EPR-16
B-10724-130	1 050	TER-129	TER-129 V	560	EPR-16
B-10724-130	1 050	TER-130	TER-130 V	560	EPR-16
B-10724-130	1 050	TER-131	TER-131 V	560	EPR-16
B-10724-134	850	TER-132	TER-132 V	460	EPR-17
B-10724-134	850	TER-133	TER-133 V	460	EPR-17
B-10724-134	850	TER-134	TER-134 V	460	EPR-17
B-10724-140	950	TER-138	TER-138 V	520	EPR-18
B-10724-134	850	TER-135	TER-135 V	520	EPR-17
B-10724-140	950	TER-139	TER-139 V	520	EPR-18
B-10724-134	850	TER-136	TER-136 V	520	EPR-17
B-10724-140	950	TER-140	TER-140 V	520	EPR-18
B-10724-134	850	TER-137	TER-137 V	520	EPR-17
B-10724-140	950	TER-141	TER-141 V	500	EPR-18
B-10724-140	950	TER-142	TER-142 V	500	EPR-18
B-10724-144	925	TER-143	TER-143 V	490	–
B-10724-144	925	TER-144	TER-144 V	490	–
B-10724-144	925	TER-145	TER-145 V	490	–
B-10724-148	875	TER-146	TER-146 V	460	EPR-19
B-10724-148	875	TER-147	TER-147 V	460	EPR-19
B-10724-148	875	TER-148	TER-148 V	460	EPR-19
B-10724-148	875	TER-149	TER-149 V	460	EPR-19
B-10724-151	850	TER-150	TER-150 V	460	–

[3] B-10724-### 's are the SKF PosiTrac Plus seal and require the LOR
[4] For stepped shaft housing designs, the largest shaft diameter is the speed limit
[5] Most taconite seals and all V-ring versions are made to order, contact SKF for availabilty

Seal chart for SAF and SAW housings

Shaft diameter	d_a 0(00)	d_a 5(00)	d_a 6(00)	d_b 2(00)	d_c 2(00)	d_b 3(00)	d_c 3(00)	Labyrinth seal[1] Ring seal	O-ring for LOR[2]
	Series	Series	Series	Series	Series	Series	Series		
in.	–								
6 5/8				230*		330*		LOR-151	AS-568-166
6 11/16				230		330		LOR-152	AS-568-166
6 13/16	038	538	638	232	236	332		LOR-153	38309-153
6 7/8	038	538	638	232	236*	332		LOR-154	AS-568-262
6 15/16	038*	538*	638*	232	236	332		LOR-155	AS-568-262
7	038	538	638	232*	236	332*		LOR-156	AS-568-262
7 1/16				232	236	332		LOR-157	38309-157
7 1/8	040	540	640		238		338	LOR-158	AS-568-263
7 3/16	040*	540*	640*		238		338	LOR-159	AS-568-263
7 1/4	040	540	640		238*		338*	LOR-160	AS-568-263
7 7/16				234*	240	334*	340	LOR-161	AS-568-264
7 1/2				234	240	334	340	LOR-162	AS-568-264
7 9/16				234	240	334	340	LOR-163	AS-568-265
7 5/8				234	240*	334	340*	LOR-164	AS-568-265
7 13/16	044	544		236*				LOR-165	AS-568-266
7 7/8	044	544		236				LOR-166	AS-568-266
7 15/16	044*	544*		236				LOR-167	AS-568-266
8	044	544		236				LOR-168	AS-568-266
8 1/4				238	244	338		LOR-169	AS-568-267
8 5/16				238	244*	338		LOR-170	AS-568-268
8 3/8				238*	244	338*		LOR-171	AS-568-268
8 7/16				238	244	338		LOR-172	AS-568-268
8 7/16	048							LOR-550	AS-568-268
8 1/2				238	244	338		LOR-173	AS-568-268
8 1/2	048							LOR-551	AS-568-268
8 11/16				240		340		LOR-174	AS-568-269
8 3/4				240*		340*		LOR-175	AS-568-269
8 13/16				240		340		LOR-176	AS-568-270
8 7/8				240		340		LOR-177	AS-568-270
8 15/16	048*							LOR-552	AS-568-270
9	048							LOR-513	AS-568-270
9 7/16	052*							LOR-553	AS-568-272
9 1/2	052			244				LOR-178	AS-568-272
9 9/16				244*				LOR-179	AS-568-273
9 5/8				244				LOR-180	AS-568-273
9 11/16				244				LOR-181	AS-568-273
9 15/16	056*							LOR-607	AS-568-274
10	056							LOR-568	AS-568-274
10 7/16	056*							LOR-606	AS-568-275
10 1/2	056							LOR-519	AS-568-275

* = Standard shaft diameter, all others are optional shaft diameters
1) Speed rating is the same as bearing speed rating
2) O-ring supplied with LOR is for replacement only, AS-568-### are industry standard O-rings available at most SKF authorized distributors

cont. Table 2

Contact seal[3]	Speed limit[4]	Taconite seals with contact seal[5]	with V-ring seal	Speed limit [4]	End plug
	r/min	–		r/min	–
B-10724-151	850	TER-151	TER-151 V	460	–
B-10724-151	850	TER-152	TER-152 V	460	–
B-10724-155	825	TER-153	TER-153 V	440	EPR-21
B-10724-155	825	TER-154	TER-154 V	440	EPR-21
B-10724-155	825	TER-155	TER-155 V	440	EPR-21
B-10724-155	825	TER-156	TER-156 V	440	EPR-21
B-10724-155	825	TER-157	TER-157 V	440	EPR-21
B-10724-159	800	TER-158	TER-158 V	425	EPR-21
B-10724-159	800	TER-159	TER-159 V	425	EPR-21
B-10724-159	800	TER-160	TER-160 V	425	EPR-21
B-10724-161	650	TER-161	TER-161 V	410	EPR-22
B-10724-161	650	TER-162	TER-162 V	410	EPR-22
B-10724-161	650	TER-163	TER-163 V	410	EPR-22
B-10724-161	650	TER-164	TER-164 V	390	EPR-22
B-10724-167	725	TER-165	TER-165 V	390	EPR-23
B-10724-167	725	TER-166	TER-166 V	390	EPR-23
B-10724-167	725	TER-167	TER-167 V	385	EPR-23
B-10724-167	725	TER-168	TER-168 V	385	EPR-23
B-10724-170	600	TER-169	TER-169 V	365	EPR-24
B-10724-170	600	TER-170	TER-170 V	365	EPR-24
B-10724-170	600	TER-171	TER-171 V	365	EPR-24
B-10724-170	600	TER-172	TER-172 V	365	EPR-24
B-10724-552	680	TER-550	TER-550 V	360	X-5217-4
B-10724-170	600	TER-173	TER-173 V	360	EPR-24
B-10724-552	680	TER-551	TER-551 V	360	X-5217-4
B-10724-175	650	TER-174	TER-174 V	350	EPR-25
B-10724-175	650	TER-175	TER-175 V	350	EPR-25
B-10724-175	650	TER-176	TER-176 V	350	EPR-25
B-10724-175	650	TER-177	TER-177 V	350	EPR-25
B-10724-552	640	TER-552	TER-552 V	340	X-5217-4
B-10724-552	640	TER-513	TER-513 V	340	X-5217-4
B-10724-178	600	TER-553	TER-553 V	325	X-5217-2
B-10724-178	600	TER-178	TER-178 V	320	X-5217-2
B-10724-178	600	TER-179	TER-179 V	315	X-5217-2
B-10724-178	600	TER-180	TER-180 V	315	X-5217-2
B-10724-178	600	TER-181	TER-181 V	315	X-5217-2
B-10724-607	575	TER-607	TER-607 V	310	X-5217-2
B-10724-607	575	TER-568	TER-568 V	305	X-5217-2
B-10724-606	550	TER-606	TER-606 V	295	X-5217-1
B-10724-606	550	TER-519	TER-519 V	290	X-5217-1

[3] B-10724-### 's are the SKF PosiTrac Plus seal and require the LOR
[4] For stepped shaft housing designs, the largest shaft diameter is the speed limit
[5] Most taconite seals and all V-ring versions are made to order, contact SKF for availabilty

Labyrinth seals

Labyrinth seals are the standard sealing solution for SAF and SAW housings. They are available in two variants depending on housing size:

- Labyrinth seals with the designation LER, also called triple ring seals, are supplied standard with small SAF housings (shaft diameter ≤ 2 5/8 inch). The rings form a multistage labyrinth seal with the housing seal grooves. If operating conditions warrant it, the sealing effect can be enhanced by filling the cavity between the housing and seal ring with grease.
- PosiTrac labyrinth seals, designation LOR, are supplied standard with larger SAF (shaft diameter ≥ 2 1/8 inch) and all SAW housings. These seals have an additional O-ring made of acrylonitrile-butadiene rubber (NBR) to make the labyrinth ring rotate with the shaft.

Labyrinth rings with an internal contact element

PosiTrac Plus seals consist of a PosiTrac labyrinth ring (designation LOR) and a contact element made of acrylonitrile-butadiene rubber (NBR). The labyrinth ring is located on the shaft and held in place by an O-ring. The contact element is located in the seal groove in the housing. It can be mounted either for best contaminant exclusion or for best lubricant retention (→ **fig. 6**). When the contact element is mounted for best contaminant exclusion, the sealing effect can be enhanced by filling the seal cavity with grease. The designation for the contact element is B 10724 followed by a size code, for example B 10724-122.

Taconite heavy-duty seals

Taconite seals consist of an inboard felt seal, a grease cavity and an outboard seal that is available in two designs:

- Seals in the TER series have a split contact seal.
- Seals in the TER-V series have a V-ring seal.

To further protect against the ingress of contaminants, SKF taconite seals have a grease fitting to purge grease and any trapped contaminants from the seal cavity, through the outboard seal.

Contact seals

Contact seals are solid seals that fit into the seal groove. Contact seals are available for smaller housing sizes (SAF 513 and smaller) where PosiTrac Plus seals are not available. The designation for contact seals is B 9784 followed by a size code, e.g. B 9784-15.

End plugs

Housings at the end of a shaft should have an end plug (end cover) that fits into the seal

Fig. 6

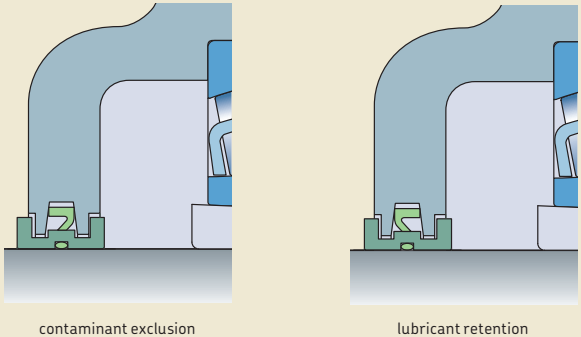

contaminant exclusion | lubricant retention

groove in the housing. The plug consists of a metal plate with a strip made of acrylonitrile-butadiene rubber (NBR). Details of the permissible length of the shaft end are listed in the product tables. End plugs are identified by the designation EPR, followed by a size code, for example EPR 7.

Using sealed bearings

Using sealed bearings in housings with standard seals is a good solution for highly contaminated environments. The sealed bearing together with the housing seal and grease provide three layers of protection (→ *SKF three-barrier solution*, **page 39**).

SAF housings for sealed spherical roller bearings are identified by the designation SAF 5(00) W. Complete pillow blocks are identified by the designation SAF B225(00). For additional information, contact the SKF application engineering service.

When using taconite heavy-duty seals, a sealed bearing does not enhance the sealing effect during operation, but still protects the bearing against contaminants during mounting.

Special seals

In addition to the standard seal assortment, SAF and SAW pillow (plummer) block housings are available, on request, with high-temperature contact seals or high-speed contact seals.

High-temperature seals

High-temperature contact seals (designation LORP) consist of a PTFE labyrinth ring with an FKM (fluoro rubber) O-ring and a PTFE contact element. The PTFE contact element is available separately (designation B-10785). High-temperature seals can accommodate operating temperatures up to 400 °F. The limiting speed for the bearing can be attained.

High-speed seals

High-speed contact seals consist of an aluminium labyrinth ring with an NBR O-ring (designation LOR) and a PTFE contact element (designation B-10785). With PTFE contact elements, the limiting speed for the bearing can be attained.

WARNING!
Seals made of FKM (fluoro rubber) exposed to an open flame or temperatures above 570 °F are a health and environmental hazard! Contact SKF for detailed safety instructions.

Design considerations

For general information about system design, refer to the following sections:

- *Typical shaft-bearing combinations* (→ **page 41**)
- *Locating/non-locating bearing arrangements* (→ **page 40**)
- *Load carrying capacity* (→ **page 44**)
- *Axial load carrying capacity for bearings on sleeves* (→ **page 44**)
- *Specifications for shafts and housing support surfaces* (→ **page 45**)

For additional information about rolling bearings and adapter sleeves, refer to the product information available online at skf.com/bearings.

Typical shaft-bearing combinations

SAF and SAW pillow (plummer) block housings can accommodate different shaft-bearing combinations (→ **fig. 7**):

- Plain shaft with bearing on an adapter sleeve
- Stepped shaft with bearing on a cylindrical seat

Plain shaft with bearing on an adapter sleeve

SAF pillow blocks in the 15, 16, 225, 226, 230, C25, C26 and C30 series and SAW pillow blocks in the 235 series accommodate bearings on an adapter sleeve on plain shafts. Housings, appropriate parts and dimensions are listed in **product tables 8.1** (→ **page 418**), **8.2** (→ **page 424**) and **8.3** (→ **page 430**).

Stepped shaft with bearing on a cylindrical seat

SAF pillow blocks in the 13, 222, 223, C22 and C23 series and SAW pillow blocks in the 232 series accommodate bearings on a cylindrical seat on stepped shafts. Housings, appropriate parts and dimensions are listed in the **product tables 8.4** (→ **page 434**), **8.5** (→ **page 436**) and **8.6** (→ **page 444**).

Fig. 7

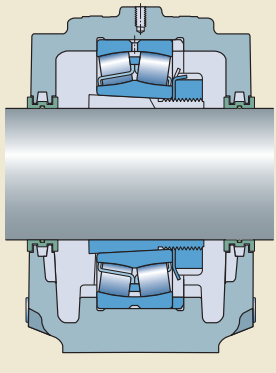

Plain shaft with bearing on an adapter sleeve

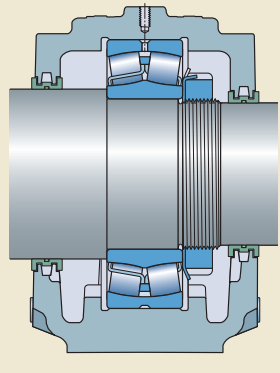

Stepped shaft with bearing on a cylindrical seat

Locating and non-locating bearing positions

SAF and SAW housings can be used for both the locating and non-locating bearing position.

The housings are machined standard for bearings in the non-locating position. Bearings in the locating position as well as CARB toroidal roller bearings must be secured in the housing with one or two stabilizing (locating) rings. Appropriate stabilizing rings are listed in the product tables.

Load carrying capacity

SAF and SAW housings are intended for loads acting perpendicularly toward the support surface. If the housing is supported over its entire base and the loads are purely perpendicular, loads are limited only by the bearing.

If loads acting in other directions occur, check that the magnitude of the load is permissible for the housing and the attachment bolts. Guideline values for the safe loads of the housings are provided in **tables 3** to **5** on **pages 404** to **407**. The safe loads have been calculated using a safety factor of 5 against fracture and a factor of 2 against cap bolt yield. For housings made of spheroidal graphite cast iron the values obtained from **table 3** on **page 404** should be multiplied by a factor of 1,8.

If the housing is not supported over its entire base, the load carrying capacity for vertical loads may be affected. For additional information, contact the SKF application engineering service.

For a purely axial force, static or dynamic, the permissible load on the pillow block housing should not exceed 65% of $P_{180°}$. If the incorporated bearing is mounted on a sleeve, check the permissible axial load for the sleeve.

When housings are subjected to cyclic loads or dynamic imbalance, contact the SKF application engineering service.

Table 3

Safe loads and cap bolt information for SAF cast iron housings

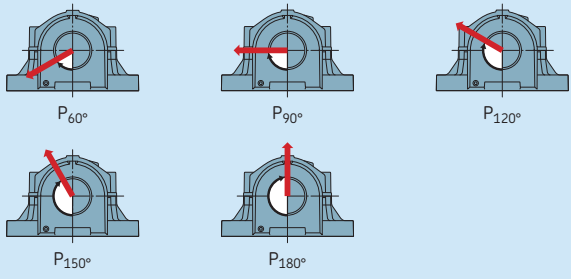

Housing Size			Recommended safe loads $P_{60°}$	$P_{90°}$	$P_{120°}$	$P_{150°}$	$P_{180°}$	Cap bolt (no.) Size	Torque	SAE grade
–			lbf.					in.	ft.-lbs.	
	509		4 700	2 800	1 700	1 500	1 800	(2) 7/16-14	45	5
308			7 300	4 400	2 800	2 500	3 100	(2) 1/2-13	110	8
	510		6 500	3 900	2 500	2 200	2 800	(2) 7/16-14	45	5
309		609	7 900	4 700	3 000	2 700	3 300	(2) 1/2-13	110	8
	511		10 100	6 100	3 900	3 500	4 300	(2) 1/2-13	60	5
310		610	8 800	5 300	3 200	2 900	3 500	(2) 1/2-13	110	8
	513		11 300	6 800	4 000	3 600	4 300	(2) 1/2-13	60	5
311		611	9 700	5 800	3 600	3 300	4 000	(2) 1/2-13	110	8
311*		611*	8 000	4 800	3 000	2 700	3 200	(2) 1/2-13	110	8
312			11 100	6 700	4 100	3 700	4 500	(2) 1/2-13	110	8
312*			9 500	5 700	3 500	3 100	3 800	(2) 1/2-13	110	8
	515		17 000	10 200	6 300	5 700	6 800	(2) 1/2-13	60	5
	515*		12 200	7 300	4 500	4 100	5 000	(2) 1/2-13	60	5
313		613	18 700	11 200	6 800	6 000	7 100	(2) 5/8-11	220	8
313*		613*	13 600	8 100	4 900	4 400	5 200	(2) 5/8-11	220	8
216	516		18 700	11 200	6 800	6 000	7 100	(2) 5/8-11	110	5
216*	516*		13 600	8 100	4 900	4 400	5 200	(2) 5/8-11	110	5
314			20 800	12 500	7 800	6 900	8 500	(2) 5/8-11	220	8
314*			20 800	12 500	7 800	6 900	8 500	(2) 5/8-11	220	8
217	517		19 000	11 400	7 100	6 400	7 800	(2) 5/8-11	110	5
217*	517*		13 800	8 300	5 200	4 700	5 700	(2) 5/8-11	110	5
218	518		27 200	16 300	10 200	9 100	11 200	(2) 5/8-11	110	5
218*	518*		22 800	13 700	8 600	7 800	9 500	(2) 5/8-11	110	5
315		615	27 200	16 300	10 200	9 100	11 200	(2) 5/8-11	220	8
315*		615*	22 800	13 700	8 600	7 800	9 500	(2) 5/8-11	220	8
316		616	19 300	11 600	7 200	6 500	7 800	(2) 3/4-10	380	8
316*		616*	20 800	12 500	7 600	6 900	8 300	(2) 3/4-10	380	8

continues on next page

* When the bearing housing can be supplied with either a two- or four-bolt base, the asterisk allowable loads for the four-bolt base option

cont. Table 3

Safe loads and cap bolt information for SAF cast iron housings

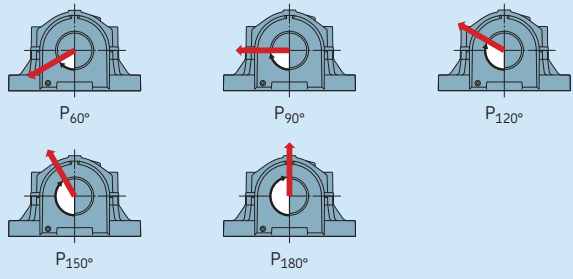

Housing Size					Recommended safe loads $P_{60°}$	$P_{90°}$	$P_{120°}$	$P_{150°}$	$P_{180°}$	Cap bolt (no.) Size	Torque	SAE grade
–					lbf.					in.	ft.-lbs.	
		317		617	21 200	12 700	8 000	7 200	8 600	(2) 3/4-10	380	8
		317*		617*	23 300	14 000	8 800	8 000	9 600	(2) 3/4-10	380	8
024	220		520		30 500	18 300	11 400	10 400	12 500	(2) 3/4-10	150	5
024*	220*		520*		26 700	16 000	10 000	9 000	11 000	(2) 3/4-10	150	5
		318		618	28 800	17 300	11 000	10 000	12 200	(2) 3/4-10	380	8
026	222		522		33 400	20 000	12 500	11 400	13 700	(2) 3/4-10	150	5
	224		524		41 700	25 000	16 300	15 000	18 300	(2) 1-8	295	5
028		320		620	41 700	25 000	16 300	15 000	18 300	(2) 1-8	900	8
	226		526		42 500	25 500	16 600	15 300	19 000	(2) 1-8	295	5
030/032		322		622	42 500	25 500	16 600	15 300	19 000	(2) 1-8	900	8
034	228		528		55 900	33 500	21 200	19 300	23 200	(2) 1-8	295	5
	230	324	530	624	51 700	31 000	19 600	18 000	21 600	(4) 3/4-10	150	5
036/038	232	326	532	626	50 900	30 500	19 300	17 600	21 200	(4) 3/4-10	150	5
040	234	328	534	628	52 600	31 500	19 300	17 300	20 800	(4) 3/4-10	150	5
	236	330	536	630	52 600	31 500	19 000	17 000	20 000	(4) 3/4-10	150	5
044	238	332	538	632	65 100	39 000	24 000	21 200	25 500	(4) 7/8-9	200	5
048	240	334	540	634	81 800	49 000	30 500	27 000	32 500	(4) 7/8-9	200	5
052	244	338	544	638	95 100	57 000	36 000	32 500	39 000	(4) 1-8	295	5
056		340		640	101 000	61 000	38 000	34 000	41 500	(4) 1 1/2-6	750	5

* When the bearing housing can be supplied with either a two- or four-bolt base, the asterisk allowable loads for the four-bolt base option

Table 4

Safe loads and cap bolt information for SAFS cast steel housings

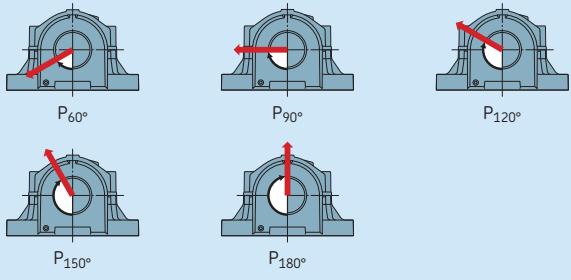

Housing Size					Recommended safe loads $P_{60°}$	$P_{90°}$	$P_{120°}$	$P_{150°}$	$P_{180°}$	Cap bolt (no.) Size	Torque	SAE grade
–					lbf.					in.	ft.-lbs.	
			515		23 300	13 400	8 300	7 500	9 000	(2) 1/2-13	110	8
			515*		17 000	10 200	6 400	5 700	6 900	(2) 1/2-13	110	8
	216		516		31 000	18 600	11 200	10 000	11 800	(2) 5/8-11	220	8
	216*		516*		31 000	18 600	11 200	10 000	11 800	(2) 5/8-11	220	8
	217		517		17 700	10 600	6 500	6 000	7 200	(2) 5/8-11	220	8
	217*		517*		18 700	11 200	7 100	6 400	7 600	(2) 5/8-11	220	8
	218		518		31 700	19 000	12 000	10 800	13 200	(4) 1/2-13	110	8
	218*		518*		35 400	21 200	13 400	12 200	14 600	(4) 1/2-13	110	8
024	220		520		31 700	19 000	11 800	10 800	12 900	(4) 5/8-11	220	8
024*	220*		520*		39 400	23 600	14 600	13 200	16 000	(4) 5/8-11	220	8
026	222		522		40 000	24 000	15 000	13 400	16 300	(4) 5/8-11	220	8
	224		524		55 900	33 500	21 200	19 600	24 000	(4) 5/8-11	220	8
028		320		620	55 900	33 500	21 200	19 600	24 000	(4) 5/8-11	220	8
030	226	322	526	622	69 300	41 500	28 000	26 500	34 000	(4) 3/4-10	380	8
032					69 300	41 500	28 000	26 500	34 000	(4) 3/4-10	380	8
	228		528		67 600	40 500	26 000	23 600	28 500	(4) 7/8-9	600	8
034					67 600	40 500	26 000	23 600	28 500	(4) 7/8-9	600	8
	230	324	530	624	88 500	53 000	33 500	30 500	36 500	(4) 7/8-9	600	8
036	232	326	532	626	77 600	46 500	30 000	27 000	32 500	(4) 7/8-9	600	8
038					77 600	46 500	30 000	27 000	32 500	(4) 7/8-9	600	8
040	234	328	534	628	77 600	46 500	28 500	25 500	30 000	(4) 1-8	900	8
	238	330	536	630	120 200	72 000	44 000	39 000	45 500	(2) 1 3/8-6	2380	8
044	238	332	538	632	93 500	56 000	34 000	30 500	36 000	(4) 1 1/8-7	1280	8
048	240	334	540	634	125 200	75 000	46 500	41 500	50 000	(4) 1 1/4-7	1820	8
052	244	338	544	638	155 300	93 000	58 500	53 000	64 000	(4) 1 1/2-6	3160	8
056		340		640	150 300	90 000	56 000	50 000	60 000	(4) 1 1/2-6	3160	8

* When the bearing housing can be supplied with either a two- or four-bolt base, the asterisk indicates safe loads for the four-bolt base option

Table 5

Safe loads and cap bolt information for SAW housings made of grey cast iron

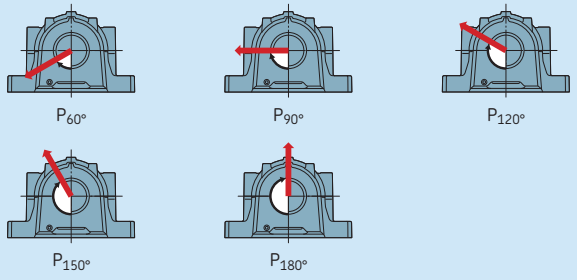

Housing	Recommended safe loads					Cap bolt		
Size	$P_{60°}$	$P_{90°}$	$P_{120°}$	$P_{150°}$	$P_{180°}$	(no.) size	Torque	SAE grade
–	lbf.					in.	ft.-lbs.	
520	26 720	16 000	10 000	9 000	11 000	(2) 3/4-10	380	8
526	42 585	25 500	16 600	15 300	19 000	(2) 1-8	900	8
528	43 420	26 000	16 600	15 000	18 300	(4) 7/8-9	165	2
538	65 130	39 000	24 000	21 200	25 500	(4) 7/8-9	600	8
540	81 830	49 000	30 500	27 000	32 500	(4) 7/8-9	600	8
544	95 190	57 000	36 000	32 500	39 000	(4) 1-8	900	8

Additional housing support

When the housing is subjected to loads acting parallel to the support surface, it may be necessary to pin the housing to the support surface or to provide a stop to counter the load.

When loads act at angles between 60° and 120°, or when the axial loads are greater than 25% of $P_{180°}$, the housing should be pinned to the support surface or a stop should be provided to counter the load. The dowel pins or stop should be sufficiently strong to accommodate the loads acting parallel to the support surface. Dimples indicating the recommended positions for dowel pins are cast into the base of the housing.

Operating temperature

The permissible operating temperature is mainly limited by the seals (→ **table 1**, **page 390**) and the lubricant in the bearing. For temperature limits of SKF bearings and lubricants, refer to the product information available online at skf.com/bearings.

The housing material does not have any additional temperature limits, except for very low temperature applications where impact strength could be a factor. The housing paint is heat resistant up to 175 °F material temperature or 210 °F ambient temperature.

When temperatures outside the permissible range are expected, contact the SKF application engineering service.

Operating speed

All seals, except non-contact labyrinth seals, limit the permissible operating speed. Speed limits for seals are provided in **table 2** on **page 392**. For speed limits of the bearing, refer to the product information available online at skf.com/bearings.

Shaft specifications

Table 6 lists the recommended shaft diameter tolerances. The values d_a, d_b and d_c are listed in the product tables starting on **page 418**. The tolerance class for the bearing shaft seat should be selected from the SKF catalogue *Rolling bearings*.

Attachment bolt recommendations

In typical applications, 8.8 class (SAE J429, Grade 5) hexagon head bolts can be used together with washers. If the load does not act perpendicularly toward the base, it may be necessary to use stronger, 10.9 class (SAE J429, Grade 8) bolts.

SKF housings can withstand loads resulting from tightening the attachment bolts to the torque values recommended by bolt manufacturers. SKF cannot guarantee that tightening to the recommended value will provide sufficient anchoring. Make sure that attachment bolts, dowels or stops, and a sufficiently strong support can accommodate all occurring loads.

Table 6

Recommended shaft diameter tolerances

Nominal diameter		Diameter tolerance limits			
		Adapter mounting		Cylindrical mounting	
over	incl.	d_a high	d_a low	d_b and d_c high	d_b and d_c low
in.					
1/2	1	0.000	−0.002	–	–
1	2	0.000	−0.003	0.000	−0.003
2	4	0.000	−0.004	0.000	−0.003
4	6	0.000	−0.005	0.000	−0.003
6	10	0.000	−0.006	0.000	−0.004
10	15	0.000	−0.006	0.000	−0.005
15		0.000	−0.006	0.000	−0.006

Lubrication

SAF and SAW pillow (plummer) blocks can accommodate grease, oil bath or circulating oil lubrication systems. Any sealing solution can be used with grease lubrication, while for oil lubrication SKF does not recommend using labyrinth rings in the LER series.

The lubricant should be selected based on the operating conditions of the bearing. For additional information about lubricant selection, refer to the product information available online at skf.com/bearings.

Initial grease fill

If no other requirements exist, the free space in the bearing should be completely filled with grease and the free space in the housing should be filled to 20 to 40% of its volume. A 40% grease fill is required when bearings have to be relubricated from the side, while a 20% grease fill is used when bearings are relubricated via the outer ring.

For highly contaminated environments and slow speeds, fill the housing to 70 to 80%. For best protection again contaminants, use the SKF three-barrier solution (→ **page 39**). For additional information, contact the SKF application engineering service.

Quantities for 20% and 40% grease fills are listed in **tables 7** and **8**. The values are valid for a typical lithium grease (about 0.57 oz/in^3). The grease to fill labyrinth seals or taconite heavy-duty seals is not included. For sealed bearings, the values have to be adjusted.

In most applications, the initial grease fill will adequately lubricate the bearing until the grease is exchanged during the next planned maintenance interval.

Table 7

Initial grease fill for SAF housings

Housing Size					Initial fill 20 %	40%
–					oz	
			507		0.7	1.3
			509		0.9	1.8
			510		1.1	2.3
		308			1.1	2.3
		309		609	1.4	2.9
			511		1.4	2.9
		310		610	1.9	3.8
			513		1.9	3.8
		311		611	2.4	4.8
			515		2.4	4.8
		312			3.1	6.2
	216	313	516	613	3.1	6.2
	217		517		3.9	7.7
		314			3.9	7.7
	218	315	518	615	5.0	10.1
		316		616	6.4	12.9
		317		617	6.4	12.9
024	220		520		6.4	12.9
		318		618	8.2	17
026	222		522		8.2	17
028	224	320	524	620	13.4	27
030	226	322	526	622	13.5	27
032					13.5	27
034	228		528		17	35
	230	324	530	624	22	44
036	232	326	532	626	28	57
038					28	57
040	234	328	534	628	31	62
	236	330	536	630	46	93
044	238	332	538	632	59	119
048	240	334	540	634	76	152
052	244	338	544	638	97	194
056		340		640	124	248

Table 8

Initial grease fill for SAW housings

Housing Size		Initial fill 20 %	40%
–		oz	
218	518	5.0	10.1
220	520	6.4	12.9
222	522	15	30
224	524	13.4	27
226	526	13.5	27
228	528	30	60
230	530	22	44
323	532	28	57
234	534	31	62
236	536	46	93
238	538	59	119
240	540	76	152
244	544	97	194

Relubrication

SAF and SAW housing caps have two drilled and tapped lubrication holes, one centred and one offset, (→ **fig. 8**) that are sealed with standard pipe plugs.

The housings also have dimples on the cap where holes can be drilled and tapped if other positions are required. Two dimples on the outer sides of the central ridge indicate the position of lubrication holes to lubricate labyrinth seals. All SAF and SAW housing bases are equipped with a drain plug on each side (→ **fig. 9**) to purge or drain old lubricants or to serve as an outlet for circulating oil. The sump in the housing base is large enough to accommodate a sufficient quantity of lubricant to provide reliable long-term operation.

Fig. 8

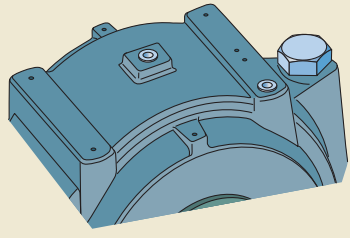

Relubrication via the outer ring

The hole in the centre of the cap should be used to relubricate spherical roller bearings with a relubrication feature (a lubrication groove and holes in the outer ring) (→ **fig. 10**). When applying grease via the relubrication feature, the shaft should be rotating.

Narrow bearings (dimension series 13 and 22) in the locating position can be displaced axially, so that the relubrication groove in the bearing does not line up with the relubrication hole in the housing cap. Make sure the bearing is sufficiently centred when relubricating.

Fig. 9

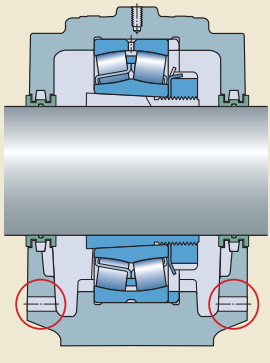

Relubrication from the side

When relubricating from the side, which is typically necessary for self-aligning ball bearings and CARB toroidal roller bearings, the offset hole in the housing should be used.

SAF housings from size 507 to 528 have an integral flange that guides grease from the grease fitting directly to the rolling elements (→ **fig. 11**).

When bearings mounted on an adapter sleeve have to be relubricated from the side, the grease should be introduced from the side opposite the lock nut.

When bearings mounted at the end of a shaft have to be relubricated from the side, the grease should be applied at the point closest to the end plug.

Fig. 10

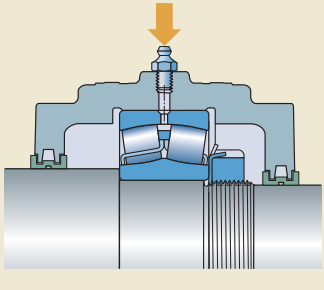

Fig. 11

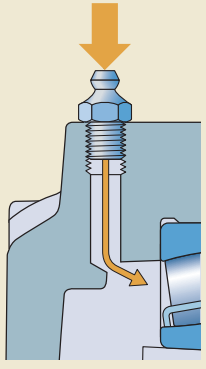

Table 9

Oil level for SAW housings

Housing series		Oil level[1]
232(00)	235(00)	
–		in.
23226	23528	2 1/16
23220	23526	2 3/8
23236		2 7/16
23238	23538	2 1/2
23240	23540	2 1/2
23244	23544	3 3/16

[1] The oil level is measured from the base of the housing. Mark the static and running level on the oil level gauge.

Oil lubrication

Oil bath lubrication

The level of oil should be at about the centre of the lowermost rolling element when the bearing is stationary. Values for the oil level are listed in **tables 9** and **table 10** (→ **page 412**). For higher speeds, the level should be slightly lower to reduce the effects of lubricant churning – about 1/8 in. above the corner of the outer ring raceway of the bearing. For additional information contact the SKF application engineering service.

An oil sight glass should be used to monitor the oil level during operation. It can be mounted to one of the drain holes in the housing base. The static oil level should be marked on the sight glass during installation and a running level should be marked immediately after start-up. Depending on the type of bearing and the speed and direction of rotation, the running level will either rise or fall from the static level.

Oil level for SAF housings

Oil level[1]	Housing series 13(00)	15(00)	16(00)	222(00)	223(00)	225(00)	226(00)
in.	–						
7/8		1507				22507	
31/32						22509	
1		1509					
1 3/32						22510, 22513	
1 1/8		1510				22515	
1 3/16		1513				22511	
1 7/32	1308						
1 1/4		1511, 1515		22216		22516	
1 9/32					22309		22609
1 5/16	1309	1516	1609		22312		
1 13/32					22313		22613
1 3/8	1312			22217	22310	22517	22610
1 7/16	1310, 1313	1517	1610, 1613		22311		22611
1 15/32					22314		
1 1/2	1311	1518	1611	22218		22518	
1 9/16	1314						
1 19/32					22315		22615
1 21/32		1520		22220		22520	
1 11/16	1315		1615		22316		22616
1 23/32							
1 3/4					22317		22617
1 25/32		1522		22222		22520	
1 13/16	1316		1616		22308		
1 27/32				22224		22524	
1 7/8	1317		1617		22318		22618
1 15/16							
2	1318		1618	22230		22530	
2 1/32				22228	22320	22528	22620
2 1/16				22232		22532	
2 5/32				22234		22534	
2 3/16	1320		1620				
2 7/32							
2 1/4							
2 11/32				22226		22526	
2 3/8				22236	22324	22536	22624
2 13/32					22322		22622
2 7/16				22238	22326	22538	22626
2 15/32				22240		22540	
2 1/2	1322		1622				
2 9/16					22328		22628
2 5/8					22330		22630
2 11/16					22332		22632
2 3/4					22334		22634
2 7/8							
3 1/8				22244		22544	
3 3/8					22338		22638
3 7/16					22340		22640

[1] The oil level is measured from the base of the housing. Mark the min. and max. level on the oil level gauge.

Table 10

230(00)KA	C22(00)	C23(00)	C25(00)	C26(00)	C30(00)KA	**Oil level**[1]
						in.
			C2507 C2509			7/8 31/32 1
			C2510, C2513 C2515 C2511			1 3/32 1 1/8 1 3/16
	C2216		C2516			1 7/32 1 1/4 1 9/32
	C2217		C2517			1 5/16 1 13/32 1 3/8
	C2218	C2314	C2518			1 7/16 1 15/32 1 1/2
23024 KA	C2220	C2315	C2520	C2615		1 9/16 1 19/32 1 21/32
23026 KA 23034 KA		C2316 C2317		C2616 C2617		1 11/16 1 23/32 1 3/4
223028 KA	C2222		C2520			1 25/32 1 13/16 1 27/32
23038 KA 23040 KA	C2230	C2318	C2530	C2618	C3038 KA C3040 KA	1 7/8 1 15/16 2
23032 KA 23036 KA	C2228 C2234	C2320	C2528 C2534	C2620	C3036 KA	2 1/32 2 1/16 2 5/32
23030 KA, 23048 KA 23044 KA					C3048 KA C3044 KA	2 3/16 2 7/32 2 1/4
	C2226		C2526			2 11/32 2 3/8 2 13/32
	C2238		C2538			2 7/16 2 15/32 2 1/2
						2 9/16 2 5/8 2 11/16
23052 KA 23056 KA	C2224		C2544		C3052 KA C3056 KA	2 3/4 2 7/8 3 1/8
						3 3/8 3 7/16

8

Fig. 12

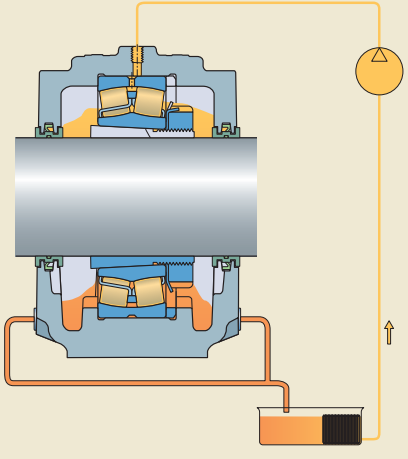

Fig. 13

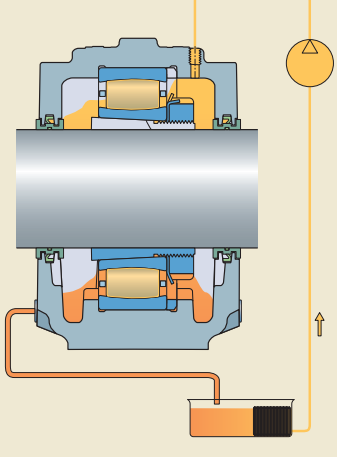

Circulating oil lubrication systems

When using a circulating oil lubrication system with SAF and SAW pillow blocks, oil is introduced through one of the inlet holes in the housing cap and drained from one or both holes in the base. For spherical roller bearings, oil should be introduced through the centre hole in the cap and drained from both sides of the base (→ **fig. 12**). For self-aligning ball bearings and CARB toroidal roller bearings, oil should be introduced through the offset hole in the cap and drained from the opposite side of the base so that oil is forced through the bearing (→ **fig. 13**).

Drains should lead downward immediately outside of the housing to prevent the accumulation of oil in the housing. Too high an oil level can result in higher operating temperatures due to churning of the lubricant. The drain piping must be adequately sized and arranged to provide adequate drainage. Additional considerations may be necessary when using circulating oil. These can include special seals, cross drillings in the housing, wet sump requirements, flow rates, and enlarged drain holes. For additional information, contact the SKF application engineering service.

Mounting

SAF and SAW pillow (plummer) block housings must be mounted properly using the appropriate tools and state of the art mechanical mounting methods. All the associated components must also meet certain basic requirements (→ *Specifications for shafts and housing support surfaces* on **page 45**). Mounting instructions are provided with each housing. For information about mounting rolling bearings, refer to the *SKF bearing maintenance handbook* or skf.com/mount.

Cap bolt torque specifications

Cap bolts should be tightened to the torque values listed in **tables 3** to **5** on **pages 404** to **407**.

Pinning or supporting the housing

Some load conditions may require the housing to be pinned to its support surface or a stop to accommodate loads acting parallel to the

housing support surface (→ *Additional housing support*, **page 407**).

Condition monitoring

SAF and SAW pillow (plummer) block housings have appropriate positions for condition monitoring sensors. These housings provide a flat area to attach sensors for different condition monitoring equipment. (→ **fig. 14**)

Position 1 is a measurement point perpendicular to the shaft, and should be used when the housing is hung from its support or when loads act away from the support surface.

Position 2 is a measurement point parallel to the shaft and should be used when loads act toward the support surface.

Both positions 1 and 2 are in accordance with ISO 10816-1.

Position 3 is a measurement point that is approximately 20° to 45° to the shaft axis.

SAF and SAW housings have dimples cast into the housing cap to show where condition monitoring sensors can be mounted for maximum effectiveness.

Accessories

The following accessories are available for SAF and SAW pillow (plummer) block housings:

- Automatic lubricators: SKF SYSTEM 24 and SKF SYSTEM Multipoint
- Grease meter: LAGM 1000E
- Condition monitoring sensors

For additional information, refer to *SKF tools and products* (→ **page 47**).

Fig. 14

Measurement points for condition monitoring

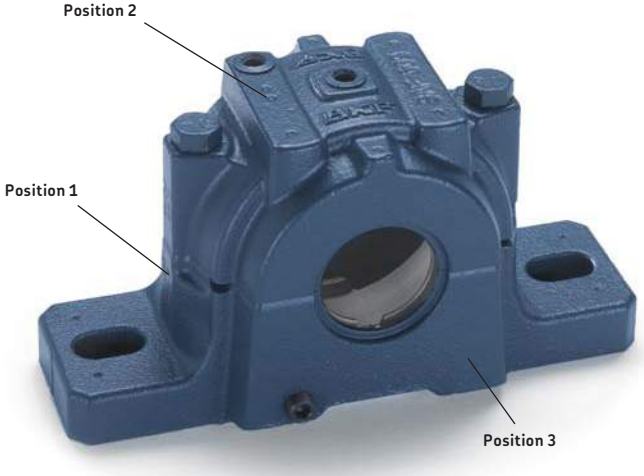

Ordering information

SAF and SAW pillow (plummer) blocks are typically supplied as complete kits including housing, seals, bearing, adapter sleeve (or nut and washer) and a standard stabilizing (locating) ring. A complete pillow block is specified by a designation provided in the product tables. Optional features can be specified with a prefix and suffixes. If several suffixes are required, put them in alphabetical order.

All pillow block parts can also be supplied separately. Designations for the different parts are listed in the product tables.

Optional components are listed in the product tables and in **table 2** on **page 392**.

Order example

A shaft with 4 3/16 inch diameter has to be supported by two SAF pillow blocks with 22224 EK spherical roller bearings on an adapter sleeve, one at the shaft end for the non-locating bearing position and one for a through shaft at the locating bearing position. The housings should be sealed with PosiTrac Plus seals.

The following items should be ordered:

- 1 pillow block SAF 22524 TLCY
- 1 pillow block SAF 22524 TLC

The delivery will contain:

- 2 housings SAF 524
- 2 spherical roller bearings 22224 EK
- 2 adapter sleeves with lock nuts SNW 24x4.3/16
- 2 locating rings SR 24-20
- 4 labyrinth rings with O-rings LOR 113
- 3 contact elements B-10724-113
- 1 end plug EPR 14

8.1 SAF pillow blocks with self-aligning ball bearings on an adapter sleeve Series SAF 15(00) and 16(00)

d_a **1 3/16 – 2 11/16** in.

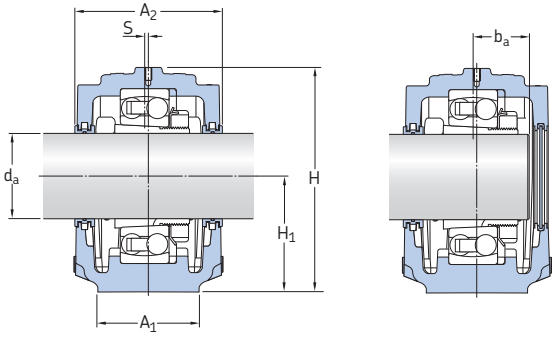

Units of measurement
In this chapter only imperial units are used. To convert imperial units to metric units, refer to the conversion table on **page 10**.

Shaft diameter d_a	**Complete pillow block**	**Components** Pillow block housing	Bearing[1]	Adapter assembly	(Qty), Stabilizing Ring, reqiured[2]	Labyrinth ring (2 incl.)	**Mass**
in.	–	–					lb.
1 3/16	**SAF 1507**	SAF 507	1207 EKTN9	SNW 7x1.3/16	(1) SR 7-6	LER 14	8
1 7/16	**SAF 1509**	SAF 509	1209 EKTN9	SNW 9x1.7/16	(1) SR 9-0	LER 17	12
	SAF 1609	SAF 609	1309 EKTN9	SNW 9x1.7/16	(2) SR 1609	LER 17	19
1 11/16	**SAF 1510**	SAF 510	1210 EKTN9	SNW 10x1.11/16	(1) SR 10-8	LER 20	13
	SAF 1610	SAF 610	1310 EKTN9	SNW 10x1.11/16	(2) SR 1610	LER 20	22
1 15/16	**SAF 1511**	SAF 511	1211 EKTN9	SNW 11x1.15/16	(1) SR 11-9	LER 24	16
	SAF 1611	SAF 611	1311 EKTN9	SNW 11x1.15/16	(2) SR 1611	LER 24	27
	FSAF 1611	FSAF 611	1311 EKTN9	SNW 11x1.15/16	(2) SR 1611	LER 24	27
2 3/16	**SAF 1513**	SAF 513	1213 EKTN9	SNW 13x2.3/16	(2) SR 13-0	LER 29	20
	SAF 1613	SAF 613	1313 EKTN9	SNW 13x2.3/16	(2) SR 1613	LOR 32	38
	FSAF 1613	FSAF 613	1313 EKTN9	SNW 13x2.3/16	(2) SR 1613	LOR 32	38
2 7/16	**SAF 1515**	SAF 515	1215 K	SNW 15x2.7/16	(2) SR 15-0	LOR 37	28
	FSAF 1515	FSAF 515	1215 K	SNW 15x2.7/16	(2) SR 15-0	LOR 37	28
	SAF 1615	SAF 615	1315 K	SNW 15x2.7/16	(2) SR 1615	LOR 37	47
	FSAF 1615	FSAF 615	1315 K	SNW 15x2.7/16	(2) SR 1615	LOR 37	47
2 11/16	**SAF 1516**	SAF 516	1216 K	SNW 16x2.11/16	(2) SR 1516	LOR 44	37
	FSAF 1516	FSAF 516	1216 K	SNW 16x2.11/16	(2) SR 1516	LOR 44	37
	SAF 1616	SAF 616	1316 K	SNW 16x2.11/16	(2) SR 1616	LOR 44	66
	FSAF 1616	FSAF 616	1316 K	SNW 16 2.11/16	(2) SR 1616	LOR 44	66

[1] Optional internal radial clearance (e.g. C3) available on request
[2] For SAF 1513,1515 and FSAF 1515 one stablilizing ring is included in each kit. For all others, discard enclosed stab rings (for SRB) and purchase stab rings separately

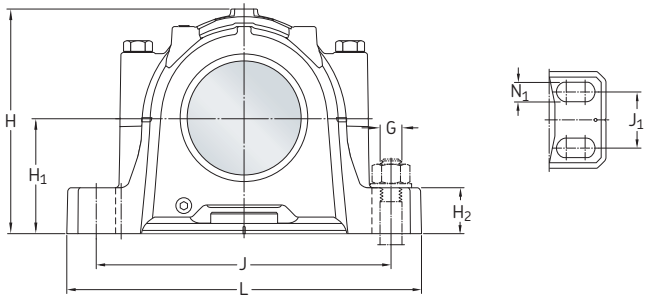

Complete pillow block
Designation Dimensions

	A_1	A_2	S	b_a	H	H_1	H_2	J_{min}	J_{max}	J_1	L	N_1	G
–	in.												
SAF 1507	2	3 1/4	3/16	13/16	3 29/32	2.000	13/16	5 5/8	6 1/8	–	7 1/2	5/8	1/2
SAF 1509	2 3/8	3 1/2	3/16	15/16	4 7/16	2.250	13/16	6 1/4	7	–	8 1/4	5/8	1/2
SAF 1609	2 3/4	4 1/4	0	1 1/16	5 5/16	2.750	1	7 3/8	7 7/8	–	9 5/8	3/4	5/8
SAF 1510	2 3/8	3 1/2	3/16	1 1/64	4 13/16	2.500	15/16	6 1/2	7	–	8 1/4	5/8	1/2
SAF 1610	2 3/4	4 5/8	0	1 5/32	5 13/16	3.000	1 1/8	7 3/4	9	–	10 5/8	3/4	5/8
SAF 1511	2 3/4	3 7/8	3/16	1 1/32	5 1/4	2.750	15/16	7 3/8	8 1/4	–	9 5/8	3/4	5/8
SAF 1611	3 1/8	4 7/8	0	1 3/16	6 3/16	3.250	1 3/16	9 1/2	8 1/8	–	11	3/4	5/8
FSAF 1611	3 1/8	4 7/8	0	1 3/16	6 3/16	3.250	1 3/16	9 1/2	8 1/8	2	11	5/8	1/2
SAF 1513	3 1/8	4 1/2	0	1 9/64	5 13/16	3.000	1	8 1/8	9 1/2	–	11	3/4	5/8
SAF 1613	3 1/2	5 5/16	0	1 11/32	6 19/32	3.500	1 1/4	11	9 5/8	–	13	7/8	3/4
FSAF 1613	3 1/2	5 5/16	0	1 11/32	6 19/32	3.500	1 1/4	11	9 5/8	2 1/8	13	3/4	5/8
SAF 1515	3 1/8	4 11/16	0	1 7/32	6 7/32	3.250	1 1/8	8 5/8	9 5/8	–	11 1/4	3/4	5/8
FSAF 1515	3 1/8	4 11/16	0	1 7/32	6 7/32	3.250	1 1/8	8 5/8	9 5/8	1 7/8	11 1/4	5/8	1/2
SAF 1615	3 7/8	5 7/8	0	1 15/32	7 9/16	4.000	1 5/8	11 5/8	10 3/8	–	13 3/4	7/8	3/4
FSAF 1615	3 7/8	5 7/8	0	1 15/32	7 9/16	4.000	1 5/8	11 5/8	10 3/8	2 1/8	13 3/4	3/4	5/8
SAF 1516	3 1/2	5	0	1 1/4	6 11/16	3.500	1 1/4	9 5/8	11	–	13	7/8	3/4
FSAF 1516	3 1/2	5	0	1 1/4	6 11/16	3.500	1 1/4	9 5/8	11	2 1/8	13	11/16	5/8
SAF 1616	3 7/8	6 1/2	0	1 1/2	8 1/4	4.250	1 3/4	12 5/8	10 5/8	–	14 1/4	7/8	3/4
FSAF 1616	3 7/8	6 1/2	0	1 1/2	8 1/4	4.250	1 3/4	12 5/8	10 5/8	2 1/8	14 1/4	3/4	5/8

8.1 SAF pillow blocks with self-aligning ball bearings on an adapter sleeve
Series SAF 15(00) and 16(00)

d_a **2 15/16 – 3 15/16** in.

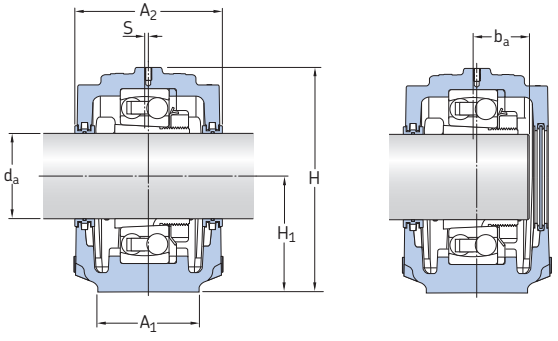

Shaft diameter d_a	**Complete pillow block**	**Components** Pillow block housing	Bearing[1]	Adapter assembly	(Qty), Stabilizing Ring, reqiured[2]	Labyrinth ring (2 incl.)	**Mass**
in.	–	–					lb.
2 15/16	**SAF 1517**	SAF 517	1217 K	SNW 17x2.15/16	(2) SR 1517	LOR 53	38
	FSAF 1517	FSAF 517	1217 K	SNW 17x2.15/16	(2) SR 1517	LOR 53	38
	SAF 1617	SAF 617	1317 K	SNW 17x2.15/16	(2) SR 1617	LOR 184	69
	FSAF 1617	FSAF 617	1317 K	SNW 17x2.15/16	(2) SR 1617	LOR 184	69
3 3/16	**SAF 1518**	SAF 518	1218 K	SNW 18x3.3/16	(2) SR 1518	LOR 188	47
	FSAF 1518	FSAF 518	1218 K	SNW 18x3.3/16	(2) SR 1518	LOR 188	47
	SAF 1618	SAF 618	1318 K	SNW 18x3.3/16	(2) SR 1618	LOR 188	91
3 7/16	**SAF 1520**	SAF 520	1220 K	SNW 20x3.7/16	(2) SR 1520	LOR 102	62
	FSAF 1520	FSAF 520	1220 K	SNW 20x3.7/16	(2) SR 1520	LOR 102	62
	SAF 1620	SAF 620	1320 K	SNW 20x3.7/16	(2) SR 1620	LOR 102	101
3 15/16	**SAF 1522**	SAF 522	1222 K	SNW 22x3.15/16	(2) SR 1522	LOR 109	73
	SAF 1622	SAF 622	1322 KM	SNW 22x3.15/16	(2) SR 1622	LOR 109	138

[1] Optional internal radial clearance (e.g. C3) available on request
[2] For SAF 1513,1515 and FSAF 1515 one stablilizing ring is included in each kit. For all others, discard enclosed stab rings (for SRB) and purchase stab rings separately

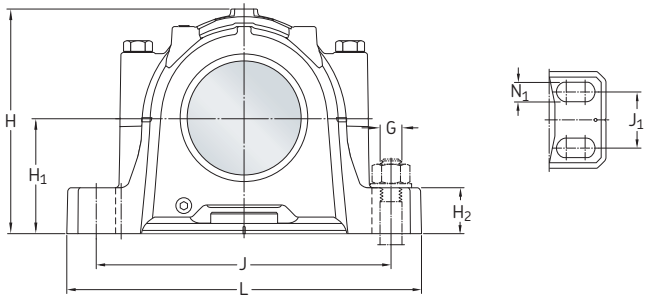

Complete pillow block
Designation Dimensions

	A_1	A_2	S	b_a	H	H_1	H_2	J_{min}	J_{max}	J_1	L	N_1	G
–	in.												
SAF 1517	3 1/2	5	0	1 5/16	7 1/8	3.750	1 1/4	9 7/8	11	–	13	7/8	3/4
FSAF 1517	3 1/2	5	0	1 5/16	7 1/8	3.750	1 1/4	9 7/8	11	2 1/8	13	3/4	5/8
SAF 1617	4 3/8	6 3/4	0	1 9/16	8 3/4	4.500	1 3/4	11 5/8	13 1/8	–	15 1/4	1	7/8
FSAF 1617	4 3/8	6 3/4	0	1 9/16	8 3/4	4.500	1 3/4	11 5/8	13 1/8	2 3/8	15 1/4	7/8	3/4
SAF 1518	3 7/8	5 7/8	0	1 3/4	7 19/32	4.000	1 5/8	10 1/4	11 3/4	–	13 3/4	7/8	3/4
FSAF 1518	3 7/8	5 7/8	0	1 3/4	7 19/32	4.000	1 5/8	10 3/8	11 5/8	2 1/8	13 3/4	11/16	5/8
SAF 1618	4 3/8	6 7/8	0	1 11/16	9 3/16	4.750	2	12	13 1/2	2 1/4	15 1/2	7/8	3/4
SAF 1520	4 3/8	6 1/32	0	1 59/64	8 9/16	4.500	1 3/4	11 5/8	13 1/8	–	15 1/4	1	7/8
FSAF 1520	4 3/8	6 1/32	0	1 59/64	8 9/16	4.500	1 3/4	11 5/8	13 1/8	2 3/8	15 1/4	13/16	3/4
SAF 1620	4 3/4	7 5/16	0	1 27/32	10 3/16	5.250	2 1/8	14 1/2	13 1/4	2 3/4	16 1/2	7/8	3/4
SAF 1522	4 3/4	6 1/2	0	2 1/8	9 7/16	4.938	2	12 5/8	14 1/2	2 3/4	16 1/2	7/8	3/4
SAF 1622	5 1/4	8 1/8	0	1 5/16	11 5/16	6.000	2 3/8	14 5/8	16	3 1/4	18 3/8	1	7/8

8.2 SAF and SAW pillow blocks with spherical roller bearings on an adapter sleeve
Series SAF 225(00), 226(00), 230(00)KA and SAW series 235(00)

d_a **1 3/16 – 2 11/16** in.

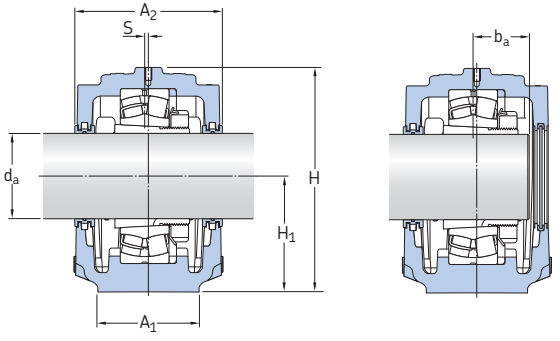

Units of measurement
In this chapter only imperial units are used. To convert imperial units to metric units, refer to the conversion table on **page 10**.

Shaft diameter d_a	**Complete pillow block**	**Components** Pillow block housing	Bearing[1)]	Adapter assembly	Stabilizing ring (1 incl.)	Labyrinth ring (2 incl.)	**Mass**
in.	–	–					lb.
1 3/16	**SAF 22507**	SAF 507	22207 EK	SNW 7x1.3/16	36053-6	LER 14	8
1 7/16	**SAF 22509**	SAF 509	22209 EK	SNW 9x1.7/16	SR 9-9	LER 17	12
	SAF 22609	SAF 609	22309 EK	SNW 109x1.7/16	SR 11-9	LER 17	20
1 11/16	**SAF 22510**	SAF 510	22210 EK	SNW 10x1.11/16	SR 10-0	LER 20	13
	SAF 22610	SAF 610	22310 EK	SNW 110x1.11/16	SR 0-10	LER 20	24
1 15/16	**SAF 22511**	SAF 511	22211 EK	SNW 11x1.15/16	SR 11-0	LER 24	16
	SAF 22611	SAF 611	22311 EK	SNW 111x1.15/16	SR 13-11	LER 24	29
	FSAF 22611	FSAF 611	22311 EK	SNW 111x1.15/16	SR 13-11	LER 24	29
2 3/16	**SAF 22513**	SAF 513	22213 EK	SNW 13x2.3/16	SR 13-0	LER 29	23
	SAF 22613	SAF 613	22313 EK	SNW 113x2.3/16	SR 16-13	LOR 32	40
	FSAF 22613	FSAF 613	22313 EK	SNW 113x2.3/16	SR 16-13	LOR 32	40
2 7/16	**SAF 22515**	SAF 515	22215 EK	SNW 15x2.7/16	SR 15-0	LOR 37	28
	SAF 22615	SAF 615	22315 CCK/W33	SNW 115x2.7/16	SR 18-15	LOR 37	52
	FSAF 22515	FSAF 515	22215 EK	SNW 15x2.7/16	SR 15-0	LOR 37	28
	FSAF 22615	FSAF 615	22315 CCK/W33	SNW 115x2.7/16	SR 18-15	LOR 37	52
2 11/16	**SAF 22516**	SAF 516	22216 EK	SNW 16x2.11/16	SR 16-13	LOR 44	37
	SAF 22616	SAF 616	22316 CCK/W33	SNW 116x2.11/16	SR 19-16	LOR 44	71
	FSAF 22516	FSAF 516	22216 EK	SNW 16x2.11/16	SR 16-13	LOR 44	37
	FSAF 22616	FSAF 616	22316 CCK/W33	SNW 116x2.11/16	SR 19-16	LOR 44	71

[1)] Optional internal radial clearance (e.g. C3) available on request

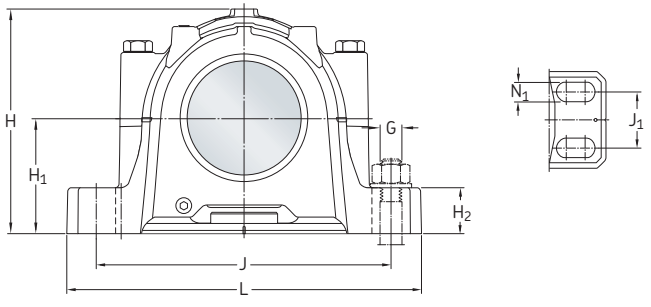

Complete pillow block

Designation	Dimensions												
	A_1	A_2	S	b_a	H	H_1	H_2	J_{min}	J_{max}	J_1	L	N_1	G
–	in.												
SAF 22507	2	3 1/4	5/64	13/16	3 29/32	2.000	13/16	5 5/8	6 1/8	–	7 1/2	5/8	1/2
SAF 22509	2 3/8	3 1/2	7/64	15/16	4 7/16	2.250	13/16	6 1/4	7	–	8 1/4	5/8	1/2
SAF 22609	2 3/4	4 1/4	3/16	1 5/16	5 5/16	2.750	1	7 3/8	7 7/8	–	9 5/8	3/4	5/8
SAF 22510	2 3/8	3 1/2	9/64	1 1/64	4 13/16	2.500	15/16	6 1/2	7	–	8 1/4	5/8	1/2
SAF 22610	2 3/4	4 5/8	3/16	1 7/16	5 13/16	3.000	11/8	7 3/4	9	–	10 5/8	3/4	5/8
SAF 22511	2 3/4	3 7/8	1/8	1 13/64	5 1/4	2.750	15/16	7 3/8	8 1/4	–	9 5/8	3/4	5/8
SAF 22611	3 1/8	4 7/8	3/16	1 1/2	6 3/16	3.250	1 3/16	8 1/8	9 1/2	–	11	3/4	5/8
FSAF 22611	3 1/8	4 7/8	3/16	1 1/2	6 3/16	3.250	1 3/16	8 1/8	9 1/2	2	11	5/8	1/2
SAF 22513	3 1/8	4 1/2	5/32	1 25/64	5 13/16	3.000	1	8 1/8	9 1/2	–	11	3/4	5/8
SAF 22613	3 1/2	5 5/16	3/16	1 11/16	6 19/32	3.500	1 1/4	9 5/8	11	–	13	7/8	3/4
FSAF 22613	3 1/2	5 5/16	3/16	1 11/16	6 19/32	3.500	1 1/4	9 5/8	11	2 1/8	13	3/4	5/8
SAF 22515	3 1/8	4 11/16	1/8	1 7/16	6 7/32	3.250	1 1/8	8 5/8	9 5/8	–	11 1/4	3/4	5/8
SAF 22615	3 7/8	5 7/8	3/16	1 7/8	7 9/16	4.000	1 5/8	10 3/8	11 5/8	–	13 3/4	7/8	3/4
FSAF 22515	3 1/8	4 11/16	1/8	1 7/16	6 7/32	3.250	1 1/8	8 5/8	9 5/8	1 7/8	11 1/4	5/8	1/2
FSAF 22615	3 7/8	5 7/8	3/16	1 7/8	7 9/16	4.000	1 5/8	10 3/8	11 5/8	2 1/8	13 3/4	3/4	5/8
SAF 22516	3 1/2	5	3/16	1 15/32	6 11/16	3.500	1 1/4	9 5/8	11	–	13	7/8	3/4
SAF 22616	3 7/8	6 1/2	3/16	1 15/16	8 1/4	4.250	1 3/4	10 5/8	12 5/8	–	14 1/4	7/8	3/4
FSAF 22516	3 1/2	5	3/16	1 15/32	6 11/16	3.500	1 1/4	9 5/8	11	2 1/8	13	11/16	5/8
FSAF 22616	3 7/8	6 1/2	3/16	1 15/16	8 1/4	4.250	1 3/4	10 5/8	12 5/8	2 1/8	14 1/4	3/4	5/8

8.2 SAF and SAW pillow blocks with spherical roller bearings on an adapter sleeve
Series SAF 225(00), 226(00), 230(00)KA and SAW series 235(00)

d_a **2 15/16 – 4 3/16** in.

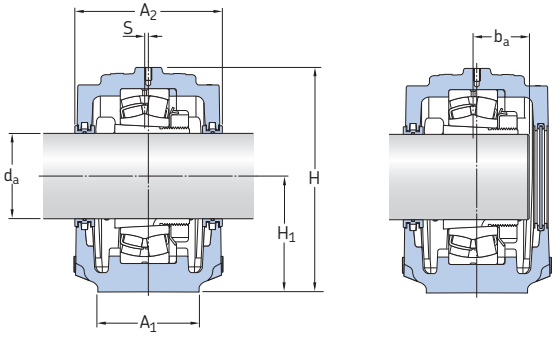

Shaft diameter d_a	Complete pillow block	Components Pillow block housing	Bearing[1]	Adapter assembly	Stabilizing ring (1 incl.)	Labyrinth ring (2 incl.)	Mass
in.	–	–					lb.
2 15/16	**SAF 22517**	SAF 517	22217 EK	SNW 17x2.15/16	SR 17-14	LOR 53	39
	SAF 22617	SAF 617	22317 CCK/W33	SNW 117x2.15/16	SR 20-17	LOR 184	75
	FSAF 22517	FSAF 517	22217 EK	SNW 17x2.15/16	SR 17-14	LOR 53	39
	FSAF 22617	FSAF 617	22317 CCK/W33	SNW 117x2.15/16	SR 20-17	LOR 184	75
3 3/16	**SAF 22518**	SAF 518	22218 EK	SNW 18x3.3/16	SR 18-15	LOR 188	47
	SAF 22618	SAF 618	22318 CCK/W33	SNW 118x3.3/36	SR 21-18	LOR 188	97
	FSAF 22518	FSAF 518	22218 EK	SNW 18x3.3/16	SR 18-15	LOR 188	47
	SAW 23518	SAW 518	23218 CCK/W33	SNW 118x3.3/16	SR 18-15	LOR 188	50
3 7/16	**SAF 22520**	SAF 520	22220 EK	SNW 20x3.7/16	SR 20-17	LOR 102	62
	SAF 22620	SAF 620	22320 CCK/W33	SNW 120x3.7/16	SR 24-20	LOR 102	113
	FSAF 22520	FSAF 520	22220 EK	SNW 20x3.7/16	SR 20-17	LOR 102	62
	SAW 23520	SAW 520	23220 CCK/W33	SNW 120x3.7/16	SR 20-17	LOR 102	75
3 15/16	**SAF 22522**	SAF 522	22222 EK	SNW 22x3.15/16	SR 22-19	LOR 109	73
	SAF 22622	SAF 622	22322 CCK/W33	SNW 122x3.15/16	SR 0-22	LOR 109	153
	SAWS 23522	SAWS 522	23222 CCK/W33	SNW 122x3.15/16	SR 22-19	LOR 109	96
4 3/16	**SAF 22524**	SAF 524	22224 EK	SNW 24x4.3/16	SR 24-20	LOR 113	104
	SAF 22624	SAF 624	22324 CCK/W33	SNW 124x4.3/16	SR 0-24	LOR 113	206
	SAF 23024 KA x 4.3/16	SAF 024 x 4.3/16	23024 CCK/W33	SNW 3024x4.3/16	38151-24[2]	LOR 113	63
	FSAF 23024 KA x 4.3/16	FSAF 024 x 4.3/16	23024 CCK/W33	SNW 3024x4.3/16	38151-24[2]	LOR 113	63
	SAW 22524	SAW 524	23224 CCK/W33	SNW 124x4.3/16	SR 24-20	LOR 113	110

[1] Optional internal radial clearance (e.g. C3) available on request
[2] Two stabilizing rings are required, but none are included.

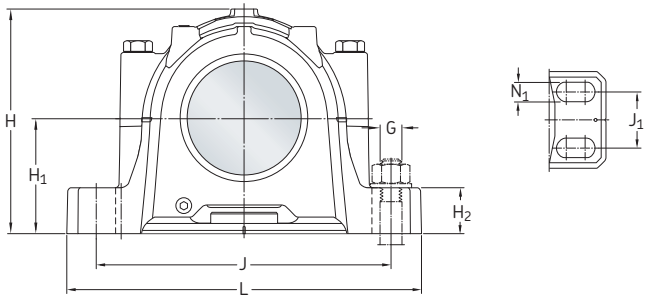

Complete pillow block Designation	Dimensions												
	A_1	A_2	S	b_a	H	H_1	H_2	J_{min}	J_{max}	J_1	L	N_1	G
–	in.												
SAF 22517	3 1/2	5	3/16	1 9/16	7 1/8	3.750	1 1/4	9 7/8	11	–	13	7/8	3/4
SAF 22617	4 3/8	6 3/4	3/16	2 1/16	8 3/4	4.500	1 3/4	11 5/8	13 1/8	–	15 1/4	1	7/8
FSAF 22517	3 1/2	5	3/16	1 9/16	7 1/8	3.750	1 1/4	9 7/8	11	2 1/8	13	3/4	5/8
FSAF 22617	4 3/8	6 3/4	3/16	2 1/16	8 3/4	4.500	1 3/4	11 5/8	13 1/8	2 3/8	15 1/4	7/8	3/4
SAF 22518	3 7/8	5 7/8	3/16	1 3/4	7 19/32	4.000	1 5/8	10 1/4	11 3/4	–	13 3/4	7/8	3/4
SAF 22618	4 3/8	6 7/8	3/16	2 3/16	9 1/4	4.750	2	12	13 1/2	2 1/4	15 1/2	7/8	3/4
FSAF 22518	3 7/8	5 7/8	3/16	1 3/4	7 19/32	4.000	1 5/8	10 3/8	11 5/8	2 1/8	13 3/4	11/16	5/8
SAW 23518	3 7/8	5 7/8	3/16	1 29/32	7 19/32	4.000	1 5/8	10 3/8	11 5/8	2 1/8	13 3/4	11/16	5/8
SAF 22520	4 3/8	6 1/32	3/16	1 59/64	8 9/16	4.500	1 3/4	11 5/8	13 1/8	–	15 1/4	1	7/8
SAF 22620	4 3/4	7 5/16	3/16	2 7/16	10 3/16	5.250	2 1/8	13 1/4	14 1/2	2 3/4	16 1/2	7/8	3/4
FSAF 22520	4 3/8	6 1/32	3/16	1 59/64	8 9/16	4.500	1 3/4	11 5/8	13 1/8	2 3/8	15 1/4	13/16	3/4
SAW 23520	4 3/8	6 13/16	3/16	2 1/16	8 3/4	4.500	1 3/4	11 5/8	13 1/8	2 3/8	15 1/4	5/8	1/2
SAF 22522	4 3/4	6 1/2	3/16	2 1/8	9 7/16	4.938	2	12 5/8	14 1/2	2 3/4	16 1/2	7/8	3/4
SAF 22622	5 1/4	8 1/8	3/16	2 5/8	11 5/16	6.000	2 3/8	14 5/8	16	3 1/4	18 3/8	1	7/8
SAWS 23522	4 3/4	7 7/8	3/16	2 3/82	9 5/8	4.938	2	12 5/8	14 1/2	2 3/4	16 1/2	7/8	3/4
SAF 22524	4 3/4	7 3/8	3/16	2 9/32	10 1/8	5.250	2 1/8	13 1/4	14 1/2	2 3/4	16 1/2	7/8	3/4
SAF 22624	6 1/4	8 3/8	3/16	2 13/16	12 1/2	6.312	2 1/2	17	18 1/4	3 3/4	21 1/4	1 1/8	1
SAF 23024 KA x 4.3/16	4 3/8	6 1/8	0	1 29/32	8 9/16	4 1/2	1 3/4	11 5/8	13 1/8	–	15 1/4	1	7/8
FSAF 23024 KA x 4.3/16	4 3/8	6 1/8	0	1 29/32	8 9/16	4 1/2	1 3/4	11 5/8	13 1/8	2 3/8	15 1/4	13/16	3/4
SAW 22524	4 3/4	7 3/8	3/16	2 17/32	10 1/8	5.250	2 1/8	13 1/4	14 1/2	2 3/4	16 1/2	7/8	3/4

8.2 SAF and SAW pillow blocks with spherical roller bearings on an adapter sleeve
Series SAF 225(00), 226(00), 230(00)KA and SAW series 235(00)

d_a **4 7/16 – 5 15/16** in.

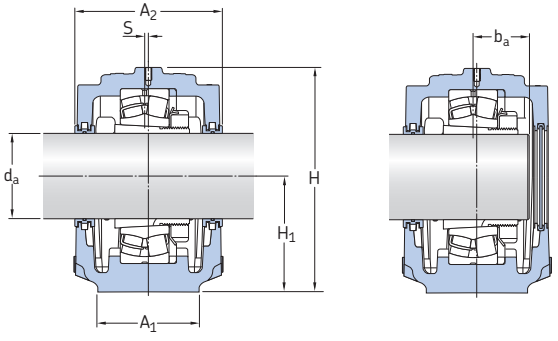

Shaft diameter d_a	Complete pillow block	Components: Pillow block housing	Components: Bearing[1]	Components: Adapter assembly	Components: Stabilizing ring (1 incl.)	Components: Labyrinth ring (2 incl.)	Mass
in.	–	–					lb.
4 7/16	**SAF 22526**	SAF 526	22226 EK	SNW 26x4.7/16	SR 26-0	LOR 117	144
	SAF 22626	SAF 626	22326 CCK/W33	SNW 126x4.7/16	SR 0-26	LOR 117	233
	SAF 23026 KA x 4.7/16	SAF 026 KA x 4.7/16	23026 CCK/W33	SNW 3026x4.7/16	38151-26[2]	LOR 117	74
	SAW 23526	SAW 526	23226 CCK/W33	SNW 126x4.7/16	SR 26-0	LOR 117	155
4 15/16	**SAF 22528**	SAF 528	22228 CCK/W33	SNW 28x4.15/16	SR 28-0	LOR 122	157
	SAF 22628	SAF 628	22328 CCK/W33	SNW 128x4.15/16	SR 0-28	LOR 122	296
	SAF 23028 KA x 4.15/16	SAF 028 KA x 4.15/16	23028 CCK/W33	SNW 3028x4.15/16	36053-50[2]	LOR 122	138
	SAW 23528	SAW 528	23228 CCK/W33	SNW 128x4.15/16	SR 28-0	LOR 122	180
5 3/16	**SAF 22530**	SAF 530	22230 CCK/W33	SNW 30x5.3/16	SR 30-0	LOR 125	202
	SAF 22630	SAF 630	22330 CCK/W33	SNW 130x5.3/16	SR 36-30	LOR 125	322
	SAF 23030 KA x 5.3/16	SAF 030 KA x 5.3/16	23030 CCK/W33	SNW 3030x5.3/16	SR 0-21[2]	LOR 125	149
	SAW 23530	SAW 530	23230 CCK/W33	SNW 130x5.3/16	SR 30-0	LOR 125	220
5 7/16	**SAF 22532**	SAF 532	22232 CCK/W33	SNW 32x5.7/16	SR 32-0	LOR 130	223
	SAF 22632	SAF 632	22332 CCK/W33	SNW 132x5.7/16	SR 38-32	LOR 130	401
	SAF 23032 KA x 5.7/16	SAF 032 KA x 5.7/16	23032 CCK/W33	SNW 3032x5.7/16	38151-32[2]	LOR 130	175
	SAW 23532	SAW 532	23232 CCK/W33	SNW 132x5.7/16	SR 32-0	LOR 130	240
5 15/16	**SAF 22534**	SAF 534	22234 CCK/W33	SNW 34x5.15/16	SR 34-0	LOR 140	278
	SAF 22634	SAF 634	22334 CCK/W33	SNW 134x5.15/16	SR 40-34	LOR 140	510
	SAF 23034 KA x 5.15/16	SAF 034 KA x 5.15/16	23034 CCK/W33	SNW 3034x5.15/16	SR 0-24[2]	LOR 140	148
	SAW 23534	SAW 534	23234 CCK/W33	SNW 134x5.15/16	SR 34-0	LOR 140	297

[1] Optional internal radial clearance (e.g. C3) available on request
[2] Two stabilizing rings are required, but none are included.

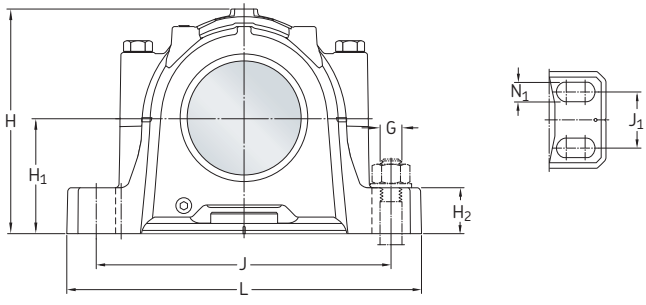

Complete pillow block Designation	Dimensions												
	A_1	A_2	S	b_a	H	H_1	H_2	J_{min}	J_{max}	J_1	L	N_1	G
–	in.												
SAF 22526	5 1/4	7 5/8	3/16	2 15/32	11 5/8	6.000	2 3/8	14 5/8	16	3 1/4	18 3/8	15/16	7/8
SAF 22626	6 1/4	8 3/4	3/16	3	13 5/16	6.688	2 5/8	17 3/8	19 1/4	3 3/4	22	1 1/8	1
SAF 23026 KA x 4.7/16	4 3/4	6 1/2	0	2 3/32	9 7/16	4.938	2	12 5/8	14 1/2	2 3/4	16 1/2	7/8	3/4
SAW 23526	5 1/4	7 5/8	3/16	2 3/4	11 5/8	6.000	2 3/8	14 5/8	16	3 1/4	18 3/8	15/16	7/8
SAF 22528	5 7/8	7 5/8	3/16	2 29/64	12 1/32	6.000	2 3/8	15 5/8	17 3/8	3 3/8	20 1/8	1 1/8	1
SAF 22628	6 3/4	9 5/8	3/16	3 1/4	14 3/16	7.062	2 3/4	19 3/8	21 5/8	4 1/4	24 3/4	1 1/8	1
SAF 23028 KA x 4.15/16	4 3/4	7 3/8	0	2 5/32	10 3/16	5.250	2 1/8	13 1/4	14 1/2	2 3/4	16 1/2	7/8	3/4
SAW 23528	5 7/8	9 1/8	3/16	2 31/32	11 3/4	6.000	2 3/8	16	17 1/8	3 3/8	20 1/8	1 1/8	1
SAF 22530	6 1/4	8 1/2	3/16	2 39/64	12 5/8	6.312	2 1/2	17	18 1/4	3 3/4	21 1/4	1 1/8	1
SAF 22630	7 1/8	9 3/4	3/16	3 7/16	14 7/8	7.500	3	20 7/8	23 5/8	4 5/8	26 3/4	1 1/8	1
SAF 23030 KA x 5.3/16	5 1/4	8 1/8	0	2 9/32	11 5/16	6.000	2 3/8	14 5/8	16	3 1/4	18 3/8	1	7/8
SAW 23530	6 1/4	8 1/2	3/16	3 1/8	12 5/8	6.312	2 1/2	17	18 1/4	3 3/4	21 1/4	1 1/8	1
SAF 22532	6 1/4	8 3/4	3/16	2 31/32	13 1/4	6.688	2 5/8	17 3/8	19 1/4	3 3/4	22	1 1/8	1
SAF 22632	7 1/2	10 3/4	3/16	3 5/8	15 11/16	7.875	3 1/8	21 5/8	24 3/8	4 1/2	28	1 3/8	1 1/4
SAF 23032 KA x 5.7/16	5 1/4	8 1/8	0	2 7/16	11 5/16	6.000	2 3/8	14 5/8	16	3 1/4	18 3/8	1	7/8
SAW 23532	6 1/4	8 3/4	3/16	3 7/16	13 1/4	6.688	2 5/8	17 3/8	19 1/4	3 3/4	22	1 1/8	1
SAF 22534	6 3/4	9 9/16	3/16	3 1/8	14 3/16	7.062	2 3/4	19 3/8	21 5/8	4 1/4	24 3/4	1 1/8	1
SAF 22634	8	11 1/4	3/16	3 3/4	16 1/2	8.250	3 3/8	22 1/2	25	5	29 1/2	1 3/8	1 1/4
SAF 23034 KA x 5.15/16	5 7/8	7 5/8	0	2 19/32	12 1/32	6.000	2 3/8	15 5/8	17 3/8	3 3/8	20 1/8	1 1/8	1
SAW 23534	6 3/4	9 9/16	3/16	3 19/12	14 3/16	7.062	2 3/4	19 3/8	21 5/8	4 1/4	24 3/4	1 1/8	1

8.2 SAF and SAW pillow blocks with spherical roller bearings on an adapter sleeve
Series SAF 225(00), 226(00), 230(00)KA and SAW series 235(00)
d_a **6 7/16 – 10 7/16** in.

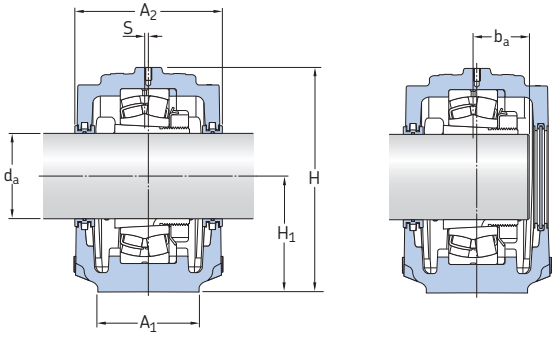

Shaft diameter d_a	Complete pillow block	Components: Pillow block housing	Components: Bearing[1]	Components: Adapter assembly	Components: Stabilizing ring (1 incl.)	Components: Labyrinth ring (2 incl.)	Mass
in.	–	–					lb.
6 7/16	**SAF 22536**	SAF 536	22236 CCK/W33	SNW 36x6.7/16	SR 36-30	LOR 148	301
	SAF 23036 KA x 6.7/17	SAF 036 KA x 6.7/16	23036 CCK/W33	SNW 3036x6.7/16	38151-36[2]	LOR 148	209
	SAW 23536	SAW 536	23236 CCK/W33	SNW 136x6.7/16	SR 36-30	LOR 148	325
6 15/16	**SAF 22538**	SAF 538	22238 CCK/W33	SNW 38x6.15/16	SR 38-32	LOR 155	374
	SAF 22638	SAF 638	22338 CCK/W33	SNW 138x6.15/16	SR 44-38	LOR 155	609
	SAF 23038 KA x 6.15/16	SAF 038 KA x 6.15/16	23038 CCK/W33	SNW 3038x6.15/16	38151-38[2]	LOR 155	200
	SAW 23538	SAW 538	23238 CCK/W33	SNW 138x6.15/16	SR 38-32	LOR 155	430
7 3/16	**SAF 22540**	SAF 540	22240 CCK/W33	SNW 40x7.3/16	SR 40-34	LOR 159	443
	SAF 22640	SAF 640	22340 CCK/W33	SNW 140x7.3/16	SR 0-40	LOR 159	902
	SAF 23040 KA x 7.3/16	SAF 040 KA x 7.3/16	23040 CCK/W33	SNW 3040x7.3/16	38151-40[2]	LOR 159	259
	SAW 23540	SAW 540	23240 CCK/W33	SNW 140x7.3/16	SR 40-34	LOR 159	515
7 15/16	**SAF 22544**	SAF 544	22244 CCK/W33	SNW 44x7.15/16	SR 44-38	LOR 167	577
	SAF 23044 KA x 7.15/16	SAF 044 KA x 7.15/16	23044 CCK/W33	SNW 3044x7.15/16	36053-140[2]	LOR 167	386
	SAW 23544	SAW 544	23244 CCK/W33	SNW 144x7.15/16	SR 44-38	LOR 167	710
8 15/16	**SAF 23048 KA x 8.15/16**	SAF 048 KA x 8.15/16	23048 CCK/W33	SNP 3048x8.15/16	A-8897[2]	LOR 552	474
9 7/16	**SAF 23052 KA x 9.7/16**	SAF 052 KA x 9.7/16	23052 CCK/W33	SNP 3052x9.7/16	A-8898[2]	LOR 553	530
9 15/16	**SAF 23056 KA x 9.15/16**	SAF 056 KA x 9.15/16	23056 CACK/W33	SNP 3056x9.15/16	A-8819[2]	LOR 607	800
10 7/16	**SAF 23056 KA x 10.7/16**	SAF 056 KA x 10.7/16	23056 CACK/W33	SNP 3056x10.7/16	A-8819[2]	LOR 606	800

[1] Optional internal radial clearance (e.g. C3) available on request
[2] Two stabilizing rings are required, but none are included.

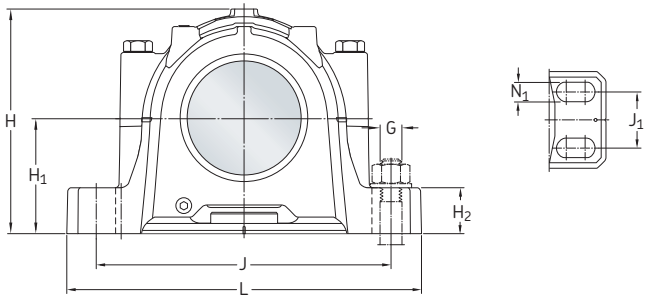

Complete pillow block

Designation	Dimensions												
	A_1	A_2	S	b_a	H	H_1	H_2	J_{min}	J_{max}	J_1	L	N_1	G
–	in.												
SAF 22536	7 1/8	10	3/16	3 9/64	14 7/8	7.500	3	20 7/8	23 5/8	4 5/8	26 3/4	1 1/8	1
SAF 23036 KA x 6.7/16	6 1/4	8 3/4	0	2 25/32	13 1/4	6.688	2 5/8	17 3/8	19 1/4	3 3/4	22	1 1/8	1
SAW 23536	7 1/8	10	3/16	3 21/32	14 7/8	7.500	3	20 7/8	23 5/8	4 5/8	26 3/4	1 1/8	1
SAF 22538	7 1/2	10 3/4	3/16	3 19/64	15 11/16	7.875	3 1/8	21 5/8	24 3/8	4 1/2	28	1 3/8	1 1/4
SAF 22638	8 3/4	12	3/16	4 1/16	18 5/8	9.500	3 3/4	24 3/4	27 7/8	5 1/4	32 3/4	1 5/8	1 1/2
SAF 23038 KA x 6.15/16	6 1/4	8 3/4	0	2 13/16	13 1/4	6.688	2 5/8	17 3/8	19 1/4	3 3/4	22	1 1/8	1
SAW 23538	7 1/2	10 7/8	3/16	3 27/32	15 11/16	7.875	3 1/8	21 5/8	24 3/8	4 1/2	28	1 3/8	1 1/4
SAF 22540	8	11 1/4	3/16	3 1/2	16 1/2	8.250	3 3/8	22 1/2	25	5	29 1/2	1 3/8	1 1/4
SAF 22640	9	12 3/8	3/16	4 1/8	19 1/2	9.875	4	26 1/4	29 1/2	5 1/2	34 1/4	1 5/8	1 1/2
SAF 23040 KA x 7.3/16	6 3/4	9 9/16	0	3 1/32	14 3/16	7.062	2 3/4	19 3/8	21 5/8	4 1/4	24 3/4	1 1/8	1
SAW 23540	8	11 3/8	3/16	4 1/16	16 1/2	8.250	3 3/8	22 1/2	25	5	29 1/2	1 3/8	1 1/4
SAF 22544	8 3/4	12	3/16	3 5/8	18 5/8	9.500	3 3/4	24 3/4	27 7/8	5 1/4	32 3/4	1 5/8	1 1/2
SAF 23044 KA x 7.15/16	7 1/2	10 3/4	0	3 7/32	15 11/16	7.875	3 1/8	21 5/8	24 3/8	4 1/2	28	1 3/8	1 1/4
SAW 23544	8 3/4	12 1/8	3/16	4 15/32	18 5/8	9.500	3 3/4	24 3/4	27 7/8	5 1/4	32 3/4	1 5/8	1 1/2
SAF 23048 KA x 8.15/16	8	11 1/4	0	3 9/16	16 1/2	8.250	3 3/8	22 1/2	25	5	29 1/2	1 3/8	1 1/4
SAF 23052 KA x 9.7/16	8 3/4	12	0	3 7/8	18 5/8	9.500	3 3/4	24 3/4	27 7/8	5 1/4	32 3/4	1 5/8	1 1/2
SAF 23056 KA x 9.15/16	9	12 3/8	0	4	19 1/2	9.875	4	26 1/4	29 1/2	5 1/2	34 1/4	1 5/8	1 1/2
SAF 23056 KA x 10.7/16	9	12 3/8	0	4	19 1/2	9.875	4	26 1/4	29 1/2	5 1/2	34 1/4	1 5/8	1 1/2

8.3 SAF pillow blocks with CARB bearings on an adapter sleeve
Series SAF C25(00), C26(00) and C30(00)
d_a **1 3/16 – 3 3/16** in.

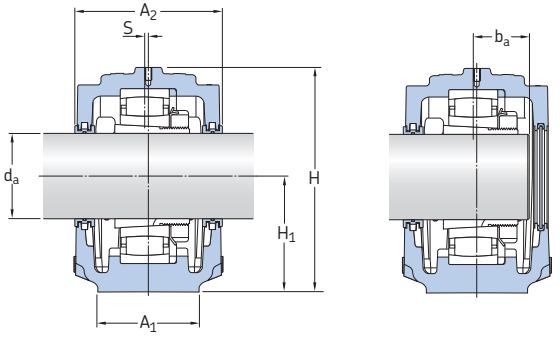

Units of measurement
In this chapter only imperial units are used. To convert imperial units to metric units, refer to the conversion table on **page 10**.

Shaft diameter d	**Complete pillow block**	**Components** Pillow block housing	Bearing[1]	Adapter assembly	Stabilizing ring (1 incl.)	Labyrinth ring (2 incl.)	**Mass**
in.	–	–					lb.
1 3/16	**SAF C2507**	SAF 507	C 2207 KTN9	HA 307 E	36053-6	LER 14	8
1 7/16	**SAF C2509**	SAF 509	C 2209 KTN9	HA 309 E	SR 9-9	LER 17	12
1 11/16	**SAF C2510**	SAF 510	C 2210 KTN9	HA 310 E	SR 10-0	LER 20	13
1 15/16	**SAF C2511**	SAF 511	C 2211 KTN9	HA 311 E	SR 11-0	LER 24	16
2 3/16	**SAF C2513**	SAF 513	C 2213 KTN9	HA 313 E	SR 13-0	LER 29	23
2 7/16	**SAF C2515**	SAF 515	C 2215 K	HA 315 E	SR 15-0	LOR 37	28
	SAF C2615	SAF 615	C 2315 K	HA 2315	SR 18-15	LOR 37	52
	FSAF C2515	FSAF 515	C 2215 K	HA 315 E	SR 15-0	LOR 37	28
	FSAF C2615	FSAF 615	C 2315 K	HA 2315	SR 18-15	LOR 37	52
2 11/16	**SAF C2516**	SAF 516	C 2216 K	HA 316 E	SR 16-13	LOR 44	37
	SAF C2616	SAF 616	C 2316 K	HA 2316	SR 19-16	LOR 44	71
	FSAF C2516	FSAF 516	C 2216 K	HA 316 E	SR 16-13	LOR 44	37
	FSAF C2616	FSAF 616	C 2316 K	HA 2316	SR 19-16	LOR 44	71
2 15/16	**SAF C2517**	SAF 517	C 2217 K	HA 317 E	SR 17-14	LOR 53	38
	SAF C2617	SAF 617	C 2317 K	HA 2317	SR 20-17	LOR 184	75
	FSAF C2517	FSAF 517	C 2217 K	HA 317 E	SR 17-14	LOR 53	38
	FSAF C2617	FSAF 617	C 2317 K	HA 2317	SR 20-17	LOR 184	75
3 3/16	**SAF C2518**	SAF 518	C 2218 K	HA 318 E	SR 18-15	LOR 188	46
	SAF C2618	SAF 618	C 2318 K	HA 2318	SR 21-18	LOR 188	97
	FSAF C2518	FSAF 518	C 2218 K	HA 318 E	SR 18-15	LOR 188	46

[1] Optional internal radial clearance (e.g. C3) available on request

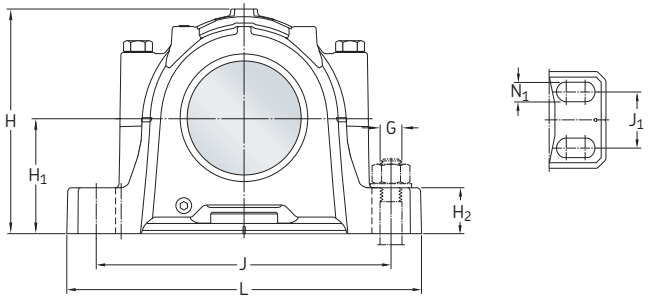

Complete pillow block

Designation	Dimensions												
	A_1	A_2	S	b_a	H	H_1	H_2	J_{min}	J_{max}	J_1	L	N_1	G
–	in.												
SAF C2507	2	3 1/4	5/64	13/16	3 29/32	2.000	13/16	5 5/8	6 1/8	–	7 1/2	5/8	1/2
SAF C2509	2 3/8	3 1/2	7/64	1 3/32	4 7/16	2.250	13/16	6 1/4	7	–	8 1/4	5/8	1/2
SAF C2510	2 3/8	3 1/2	9/64	1 5/32	4 13/16	2.500	15/16	6 1/2	7	–	8 1/4	5/8	1/2
SAF C2511	2 3/4	3 7/8	1/8	1 13/64	5 1/4	2.750	15/16	7 3/8	8 1/4	–	9 5/8	3/4	5/8
SAF C2513	3 1/8	4 1/2	5/32	1 25/64	5 13/16	3.000	1	8 1/8	9 1/2	–	11	3/4	5/8
SAF C2515	3 1/8	4 11/16	1/8	1 7/16	6 7/32	3.250	1 1/8	8 5/8	9 5/8	–	11 1/4	3/4	5/8
SAF C2615	3 7/8	5 7/8	3/16	1 7/8	7 9/16	4.000	1 5/8	10 3/8	11 5/8	–	13 3/4	7/8	3/4
FSAF C2515	31/8	4 11/16	1/8	17/16	6 7/32	3.250	11/8	8 5/8	9 5/8	1 7/8	11 1/4	5/8	1/2
FSAF C2615	3 7/8	5 7/8	3/16	1 7/8	7 9/16	4.000	1 5/8	10 3/8	11 5/8	2 1/8	13 3/4	3/4	5/8
SAF C2516	3 1/2	5	3/16	1 15/32	6 11/16	3.500	1 1/4	9 5/8	11	–	13	7/8	3/4
SAF C2616	3 7/8	6 1/2	3/16	1 15/16	8 1/4	4.250	1 3/4	10 5/8	12 5/8	–	14 1/4	7/8	3/4
FSAF C2516	3 1/2	5	3/16	1 15/32	6 11/16	3.500	1 1/4	9 5/8	11	2 1/8	13	11/16	5/8
FSAF C2616	3 7/8	6 1/2	3/16	1 15/16	8 1/4	4.250	1 3/4	10 5/8	12 5/8	2 1/8	14 1/4	3/4	5/8
SAF C2517	3 1/2	5	3/16	1 9/16	7 1/8	3.750	1 1/4	9 7/8	11	–	13	7/8	3/4
SAF C2617	4 3/8	6 3/4	3/16	2 1/16	8 3/4	4.500	1 3/4	11 5/8	13 1/8	–	15 1/4	1	7/8
FSAF C2517	3 1/2	5	3/16	1 9/16	7 1/8	3.750	1 1/4	9 7/8	11	2 1/8	13	3/4	5/8
FSAF C2617	4 3/8	6 3/4	3/16	2 1/16	8 3/4	4.500	1 3/4	11 5/8	13 1/8	2 3/8	15 1/4	7/8	3/4
SAF C2518	3 7/8	5 7/8	3/16	1 3/4	7 19/32	4.000	1 5/8	10 1/4	11 3/4	–	13 3/4	7/8	3/4
SAF C2618	4 3/8	6 7/8	3/16	2 3/16	9 1/4	4.750	2	12	13 1/2	2 1/4	15 1/2	7/8	3/4
FSAF C2518	3 7/8	5 7/8	3/16	1 3/4	7 19/32	4.000	1 5/8	10 3/8	11 5/8	2 1/8	13 3/4	11/16	5/8

8.3 SAF pillow blocks with CARB bearings on an adapter sleeve
Series SAF C25(00), C26(00) and C30(00)

d_a **3 7/16 – 10 7/16** in.

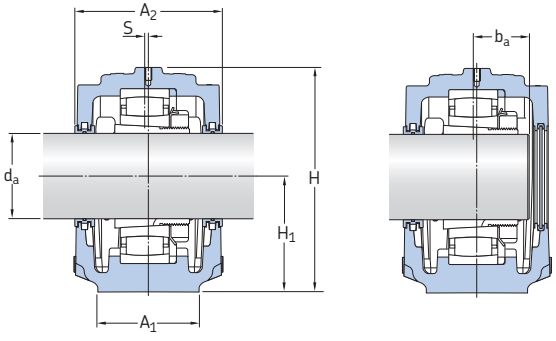

Shaft diameter d	Complete pillow block	Components Pillow block housing	Bearing[1]	Adapter assembly	Stabilizing ring (1 incl.)	Labyrinth ring (2 incl.)	Mass
in.	–	–					lb.
3 7/16	**SAF C2520**	SAF 520	C 2220 K	HA 320 E	SR 20-17	LOR 102	61
	SAF C2620	SAF 620	C 2320 K	HA 2320	SR 24-20	LOR 102	113
	FSAF C2520	FSAF 520	C 2220 K	HA 320 E	SR 20-17	LOR 102	61
3 15/16	**SAF C2522**	SAF 522	C 2222 K	H 322 E	SR 22-19	LOR 109	72
4 7/16	**SAF C2526**	SAF 526	C 2226 K	HA 3126 E	SR 26-0	LOR 117	143
4 15/16	**SAF C2528**	SAF 528	C 2228 K	HA 3128 E	SR 28-0	LOR 122	155
5 3/16	**SAF C2530**	SAF 530	C 2230 K	HA 3130 L	SR 30-0	LOR 125	194
5 15/16	**SAF C2534**	SAF 534	C 2234 K	HA 3134 L	SR 34-0	LOR 140	273
6 7/16	**SAF C3036 KA x 6.7/16**	SAF 036 KA x 6.7/16	C 3036 K	HA 3036	38151-36[2]	LOR 148	272
6 15/16	**SAF C2538**	SAF 538	C 2238 K	HA 3138	SR 38-32	LOR 155	364
	SAF C3038 KA x 6.15/16	SAF 038 KA x 6.15/16	C 3038 K	HA 3038	38151-38[2]	LOR 155	284
7 3/16	**SAF C3040 KA x 7.3/16**	SAF 040 KA x 7.3/16	C 3040 K	HA 3040	38151-40[2]	LOR 159	367
7 15/16	**SAF C2544**	SAF 544	C 2244 K	H 3144/201.612	SR 44-38	LOR 167	569
	SAF C3044 KA x 7.15/16	SAF 044 KA x 7.15/16	C 3044 K	H 3044/201.6	36053-140[2]	LOR 167	386
8 15/16	**SAF C3048 KA x 8.15/16**	SAF 048 KA x 8.15/16	C 3048 K	H 3048/227	A-8897[2]	LOR 552	474
9 7/16	**SAF C3052 KA x 9.7/16**	SAF 052 KA x 9.7/16	C 3052 K	H 3052/239.7	A-8898[2]	LOR 553	530
9 15/16	**SAF C3056 KA x 9.15/16**	SAF 056 KA x 9.15/16	C 3056 K	H 3056/252.4	A-8819[2]	LOR 607	800
10 7/16	**SAF C3056 KA x 10.7/16**	SAF 056 KA x 10.7/16	C 3056 K	H 3056/265.1	A-8819[2]	LOR 606	800

[1] Optional internal radial clearance (e.g. C3) available on request
[2] Two stabilizing rings are required, but none are included.

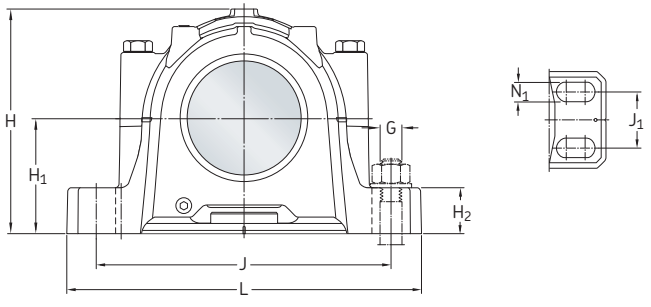

Complete pillow block

Designation	Dimensions													
	A_1	A_2	S	b_a	H	H_1	H_2	J_{min}	J_{max}	J_1	L	N_1	G	
–	in.													
SAF C2520		4 3/8	6 1/32	3/16	1 59/64	8 9/16	4.500	1 3/4	11 5/8	13 1/8	–	15 1/4	1	7/8
SAF C2620		4 3/4	7 5/16	3/16	2 7/16	10 3/16	5.250	2 1/8	13 1/4	14 1/2	2 3/4	16 1/2	7/8	3/4
FSAF C2520		4 3/8	6 1/32	3/16	1 59/64	8 9/16	4.500	1 3/4	11 5/8	13 1/8	2 3/8	15 1/4	13/16	3/4
SAF C2522		4 3/4	6 1/2	3/16	2 1/8	9 7/16	4.938	2	12 5/8	14 1/2	2 3/4	16 1/2	7/8	3/4
SAF C2526		5 1/4	7 5/8	3/16	2 15/32	11 5/8	6.000	2 3/8	14 5/8	16	3 1/4	18 3/8	15/16	7/8
SAF C2528		5 7/8	7 5/8	3/16	2 29/64	12 1/32	6.000	2 3/8	15 5/8	17 3/8	3 3/8	20 1/8	1 1/8	1
SAF C2530		6 1/4	8 1/2	3/16	2 39/64	12 5/8	6.312	2 1/2	17	18 1/4	3 3/4	21 1/4	1 1/8	1
SAF C2534		6 3/4	9 9/16	3/16	3 1/8	14 3/16	7.062	2 3/4	19 3/8	21 5/8	4 1/4	24 3/4	1 1/8	1
SAF C3036 KA x 6.7/16		6 1/4	8 3/4	0	2 25/32	13 1/4	6.688	2 5/8	17 3/8	19 1/4	3 3/4	22	1 1/8	1
SAF C2538		7 1/2	10 3/4	3/16	3 19/64	15 11/16	7.875	3 1/8	21 5/8	24 3/8	4 1/2	28	1 3/8	1 1/4
SAF C3038 KA x 6.15/16		6 1/4	8 3/4	0	2 13/16	13 1/4	6.688	2 5/8	17 3/8	19 1/4	3 3/4	22	1 1/8	1
SAF C3040 KA x 7.3/16		6 3/4	9 9/16	0	3 1/32	14 3/16	7.062	2 3/4	19 3/8	21 5/8	4 1/4	24 3/4	1 1/8	1
SAF C2544		8 3/4	12	3/16	3 5/8	18 5/8	9.500	3 3/4	24 3/4	27 7/8	5 1/4	32 3/4	1 5/8	1 1/2
SAF C3044 KA x 7.15/16		7 1/2	10 3/4	0	3 7/32	15 11/16	7.875	3 1/8	21 5/8	24 3/8	4 1/2	28	1 3/8	1 1/4
SAF C3048 KA x 8.15/16		8	11 1/4	0	3 9/16	16 1/2	8.250	3 3/8	22 1/2	25	5	29 1/2	1 3/8	1 1/4
SAF C3052 KA x 9.7/16		8 3/4	12	0	3 7/8	18 5/8	9.500	3 3/4	24 3/4	27 7/8	5 1/4	32 3/4	1 5/8	1 1/2
SAF C3056 KA x 9.15/16		9	12 3/8	0	4	19 1/2	9.875	4	26 1/4	29 1/2	5 1/2	34 1/4	1 5/8	1 1/2
SAF C3056 KA x 10.7/16		9 9	12 3/8	0	4	19 1/2	9.875	4	26 1/4	29 1/2	5 1/2	34 1/4	1 5/8	1 1/2

8.4 SAF pillow blocks with self-aligning ball bearings with a cylindrical bore Series SAF 13(00)

d_a **40 – 110** mm

Units of measurement
In this chapter only imperial units are used. To convert imperial units to metric units, refer to the conversion table on **page 10**.

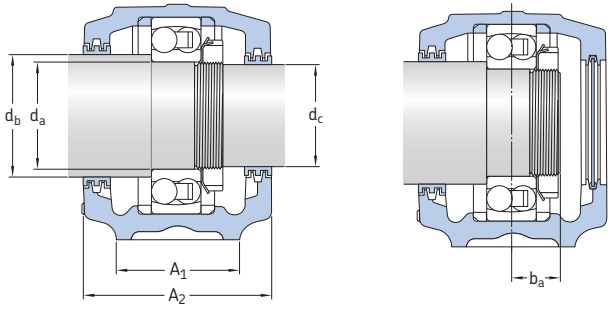

Shaft diameter			Complete pillow block	Components						Lock nut	Locking washer	Mass
				Pillow block housing	Bearing[1]	Stabilizing ring	Labyrinth seals					
d_a	d_b	d_c				(2 required)	Shaft diameter d_b	Shaft diameter d_c				
mm	in.		–	–								lb.
40	1 15/16	1 7/16	**SAF 1308**	SAF 308	1308 ETN9	SR 1608	LER 24	LER 17		N 08	W 08	14
45	2 1/8	1 11/16	**SAF 1309**	SAF 309	1309 ETN9	SR 1609	LER 28	LER 20		N 09	W 09	18
50	2 3/8	1 7/8	**SAF 1310**	SAF 310	1310 ETN9	SR 1610	LER 35	LER 23		N 10	W 10	21
55	2 9/16	2 1/16	**SAF 1311**	SAF 311	1311 ETN9	SR 1611	LER 40	LER 27		N 11	W 11	25
			FSAF 1311	FSAF 311	1311 ETN9	SR 1611	LER 40	LER 27		N 11	W 11	25
60	2 7/8	2 1/4	**SAF 1312**	SAF 312	1312 ETN9	SR 1612	LOR 47	LOR 33		N 12	W 12	29
			FSAF 1312	FSAF 312	1312 ETN9	SR 1612	LOR 47	LOR 33		N 12	W 12	29
65	3 1/16	2 7/16	**SAF 1313**	SAF 313	1313 ETN9	SR 1613	LOR 55	LOR 37		N 13	W 13	35
			FSAF 1313	FSAF 313	1313 ETN9	SR 1613	LOR 55	LOR 37		N 13	W 13	35
70	3 1/4	2 5/8	**SAF 1314**	SAF 314	1314	SR 1614	LOR 64	LOR 43		N 14	W 14	40
			FSAF 1314	FSAF 314	1314	SR 1614	LOR 64	LOR 43		N 14	W 14	40
75	3 7/16	2 13/16	**SAF 1315**	SAF 315	1315	SR 1615	LOR 79	LOR 46		AN 15	W 15	44
			FSAF 1315	FSAF 315	1315	SR 1615	LOR 79	LOR 46		AN 15	W 15	44
80	3 5/8	3	**SAF 1316**	SAF 316	1316	SR 1616	LOR 84	LOR 60		AN 16	W 16	63
			FSAF 1316	FSAF 316	1316	SR 1616	LOR 84	LOR 60		AN 16	W 16	63
85	3 15/16	3 3/16	**SAF 1317**	SAF 317	1317	SR 1617	LOR 109	LOR 188		AN 17	W 17	66
			FSAF 1317	FSAF 317	1317	SR 1617	LOR 109	LOR 188		AN 17	W 17	66
90	4 1/8	3 3/8	**SAF 1318**	SAF 318	1318	SR 1618	LOR 112	LOR 191		AN 18	W 18	86
100	4 1/2	3 13/16	**SAF 1320**	SAF 320	1320	SR 1620	LOR 118	LOR 106		AN 20	W 20	97
110	4 7/8	4 3/16	**SAF 1322**	SAF 322	1322	SR 1622	LOR 121	LOR 113		AN 22	W 22	132

[1] Optional internal radial clearance (e.g. C3) available on request

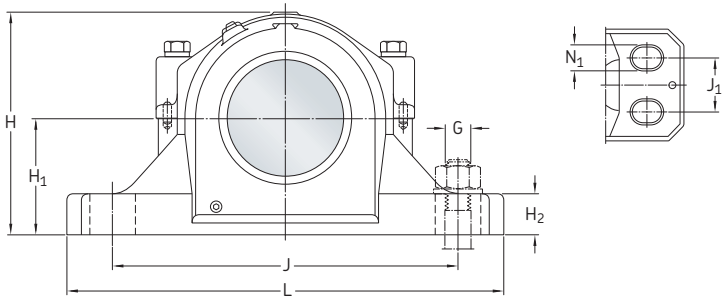

Complete pillow block

Designation	Dimensions											
	A_1	A_2	b_a	H	H_1	H_2	J_{min}	J_{max}	J_1	L	N_1	G
–	in.											
SAF 1308	2 3/8	4	1 1/64	4 13/16	2.500	1	6 1/2	7	–	8 1/4	5/8	1/2
SAF 1309	2 3/4	4 1/4	1 1/16	5 5/16	2.750	1	7 3/8	7 7/8	–	9 5/8	3/4	5/8
SAF 1310	2 3/4	4 5/8	1 5/32	5 13/16	3.000	11/8	7 3/4	9	–	10 5/8	3/4	5/8
SAF 1311	3 1/8	5	1 3/16	6 3/16	3.250	1 3/16	8 1/8	9 1/2	–	11	3/4	5/8
FSAF 1311	3 1/8	5	1 3/16	6 3/16	3.250	1 3/16	8 1/8	9 1/2	2	11	5/8	1/2
SAF 1312	3 1/8	5 1/4	1 1/4	6 3/8	3.250	1 3/16	9 5/8	8 5/8	–	11 1/4	3/4	5/8
FSAF 1312	3 1/8	5 1/4	1 1/4	6 3/8	3.250	1 3/16	9 5/8	8 5/8	1 7/8	11 1/4	5/8	1/2
SAF 1313	3 1/2	5 5/16	1 11/32	6 19/32	3.500	1 1/4	9 5/8	11	–	13	7/8	3/4
FSAF 1313	3 1/2	5 5/16	1 11/32	6 19/32	3.500	1 1/4	9 5/8	11	2 1/8	13	3/4	5/8
SAF 1314	3 1/2	5 3/8	1 3/8	7 3/8	3.750	1 1/4	9 7/8	11	–	13	7/8	3/4
FSAF 1314	3 1/2	5 3/8	1 3/8	7 3/8	3.750	1 1/4	9 7/8	11	2 1/8	13	3/4	5/8
SAF 1315	3 7/8	5 7/8	1 15/32	7 9/16	4.000	1 5/8	10 3/8	11 5/8	–	13 3/4	7/8	3/4
FSAF 1315	3 7/8	5 7/8	1 15/32	7 9/16	4.000	1 5/8	10 3/8	11 5/8	2 1/8	13 3/4	3/4	5/8
SAF 1316	3 7/8	6 1/2	1 1/2	8 1/4	4.250	1 3/4	10 5/8	12 5/8	–	14 1/4	7/8	3/4
FSAF 1316	3 7/8	6 1/2	1 1/2	8 1/4	4.250	1 3/4	10 5/8	12 5/8	2 1/8	14 1/4	3/4	5/8
SAF 1317	4 3/8	6 3/4	1 9/16	8 3/4	4.500	1 3/4	11 5/8	13 1/8	–	15 1/4	1	7/8
FSAF 1317	4 3/8	6 3/4	1 9/16	8 3/4	4.500	1 3/4	11 5/8	13 1/8	2 3/8	15 1/4	7/8	3/4
SAF 1318	4 3/8	6 7/8	1 11/16	9 1/4	4.750	2	12	13 1/2	2 1/4	15 1/2	7/8	3/4
SAF 1320	4 3/4	7 3/8	1 27/32	10 3/16	5.250	2 1/8	13 1/4	14 1/2	2 3/4	16 1/2	7/8	3/4
SAF 1322	5 1/4	8 1/8	1 15/16	11 5/16	6.000	2 3/8	14 5/8	16	3 1/4	18 3/8	1	7/8

8.5 SAF and SAW pillow blocks with spherical roller bearings with a cylindrical bore
Series SAF 222(00), 223(00) and SAW series 232(00)
d_a **40 – 75** mm

Units of measurement
In this chapter only imperial units are used. To convert imperial units to metric units, refer to the conversion table on **page 10**.

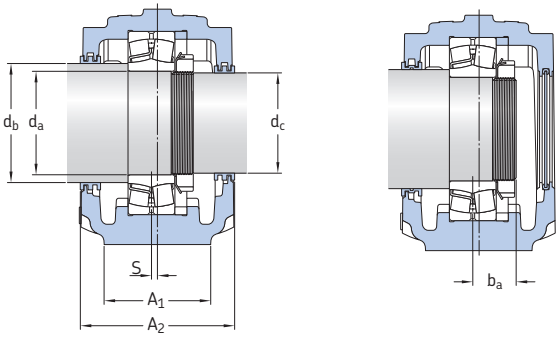

Shaft diameter			Complete pillow block	Components							Mass
				Pillow block housing	Bearing[1]	Stabilizing ring	Labyrinth seals		Lock nut	Locking washer	
							Shaft diameter	Shaft diameter			
d_a	d_b	d_c				(1 incl.)	d_b	d_c			
mm	in.		–	–							lb.
40	1 15/16	1 7/16	**SAF 22308**	SAF 308	22308 E	SR 10-8	LER 24	LER 17	N 08	W 08	15
45	2 1/8	1 11/16	**SAF 22309**	SAF 309	22309 E	SR 11-9	LER 28	LER 20	N 09	W 09	19
50	2 3/8	1 7/8	**SAF 22310**	SAF 310	22310 E	SR 0-10	LER 35	LER 23	N 10	W 10	22
55	2 9/16	2 1/16	**SAF 22311**	SAF 311	22311 E	SR 13-11	LER 40	LER 27	N 11	W 11	27
			FSAF 22311	FSAF 311	22311 E	SR 13-11	LER 40	LER 27	N 11	W 11	27
60	2 7/8	2 1/4	**SAF 22312**	SAF 312	22312 E	SR 15-12	LOR 47	LOR 33	N 12	W 12	31
			FSAF 22312	FSAF 312	22312 E	SR 15-12	LOR 47	LOR 33	N 12	W 12	31
65	3 1/16	2 7/16	**SAF 22213**	SAF 213	22213 E	SR 13-0	LOR 55	LOR 37	N 13	W 13	22
			SAF 22313	SAF 313	22313 E	SR 16-13	LOR 55	LOR 37	N 13	W 13	38
			FSAF 22313	FSAF 313	22313 E	SR 16-13	LOR 55	LOR 37	N 13	W 13	38
70	3 1/4	2 5/8	**SAF 22314**	SAF 314	22314 CC/W33	SR 17-14	LOR 64	LOR 43	N 14	W 14	42
			FSAF 22314	FSAF 314	22314 CC/W33	SR 17-14	LOR 64	LOR 43	N 14	W 14	42
75	3 7/16	2 13/16	**SAF 22215**	SAF 215	22215 E	SR 15-0	LOR 79	LOR 46	AN 15	W 15	27
			SAF 22315	SAF 315	22315 CC/W33	SR 18-15	LOR 79	LOR 46	AN 15	W 15	48
	3 7/16	2 13/16	**FSAF 22215**	FSAF 215	22215 E	SR 15-0	LOR 79	LOR 46	AN 15	W 15	27
			FSAF 22315	FSAF 315	22315 CC/W33	SR 18-15	LOR 79	LOR 46	AN 15	W 15	48

[1] Optional internal radial clearance (e.g. C3) available on request

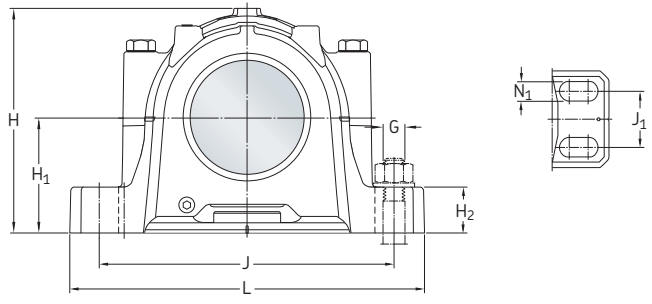

Complete pillow block

Designation	Dimensions												
	A_1	A_2	S	b_a	H	H_1	H_2	J_{min}	J_{max}	J_1	L	N_1	G
–	in.												
SAF 22308	2 3/8	4	3/16	1 5/32	4 13/16	2.500	1	6 1/2	7	–	8 1/4	5/8	1/2
SAF 22309	2 3/4	4 1/4	3/16	1 5/16	5 5/16	2.750	1	7 3/8	7 7/8	–	9 5/8	3/4	5/8
SAF 22310	2 3/4	4 5/8	3/16	1 7/16	5 13/16	3.000	1 1/8	7 3/4	9	–	10 5/8	3/4	5/8
SAF 22311	3 1/8	4 7/8	3/16	1 1/2	6 3/16	3.250	1 3/16	8 1/8	9 1/2	–	11	3/4	5/8
FSAF 22311	3 1/8	4 7/8	3/16	1 1/2	6 3/16	3.250	1 3/16	8 1/8	9 1/2	2	11	5/8	1/2
SAF 22312	3 1/8	5 1/4	3/16	1 9/16	6 3/8	3.250	1 3/16	8 5/8	9 5/8	–	11 1/4	3/4	5/8
FSAF 22312	3 1/8	5 1/4	3/16	1 9/16	6 3/8	3.250	1 3/16	8 5/8	9 5/8	1 7/8	11 1/4	5/8	1/2
SAF 22213	3 1/8	4 1/2	5/32	1 25/64	5 13/16	3.000	1	8 1/8	9 1/2	–	11	3/4	5/8
SAF 22313	3 1/2	5 5/16	3/16	1 11/16	6 19/32	3.500	1 1/4	9 5/8	11	–	13	7/8	3/4
FSAF 22313	3 1/2	5 5/16	3/16	1 11/16	6 19/32	3.500	1 1/4	9 5/8	11	2 1/8	13	3/4	5/8
SAF 22314	3 1/2	5 3/8	3/16	1 11/16	7 3/8	3.750	1 1/4	9 7/8	11	–	13	7/8	3/4
FSAF 22314	3 1/2	5 3/8	3/16	1 11/16	7 3/8	3.750	1 1/4	9 7/8	11	2 1/8	13	3/4	5/8
SAF 22215	3 1/8	4 11/16	1/8	1 7/16	6 7/32	3.250	1 1/8	8 5/8	9 5/8	–	11 1/4	3/4	5/8
SAF 22315	3 7/8	5 7/8	3/16	1 7/8	7 9/16	4.000	1 5/8	10 3/8	11 5/8	–	13 3/4	7/8	3/4
FSAF 22215	3 1/8	4 11/16	1/8	1 7/16	6 7/32	3.250	1 1/8	8 5/8	9 5/8	1 7/8	11 1/4	5/8	1/2
FSAF 22315	3 7/8	5 7/8	3/16	1 7/8	7 9/16	4.000	1 5/8	10 3/8	11 5/8	2 1/8	13 3/4	3/4	5/8

8.5 SAF and SAW pillow blocks with spherical roller bearings with a cylindrical bore
Series SAF 222(00), 223(00) and SAW series 232(00)
d_a **80 – 110** mm

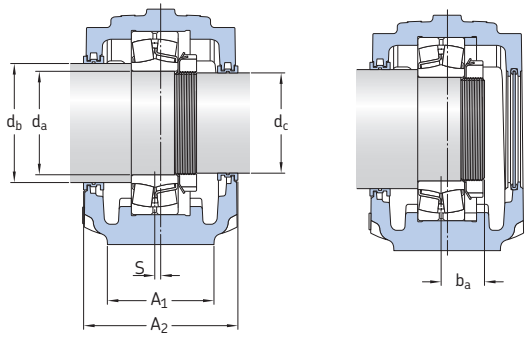

Shaft diameter			Complete pillow block	Components							Mass
				Pillow block housing	Bearing[1]	Stabilizing ring	Labyrinth seals		Lock nut	Locking washer	
							Shaft diameter	Shaft diameter			
d_a	d_b	d_c				(1 incl.)	d_b	d_c			
mm	in.		–	–							lb.
80	3 5/8	3	**SAF 22216**	SAF 216	22216 E	SR 16-13	LOR 82	LOR 54	AN 16	W 16	34
			SAF 22316	SAF 316	22316 CC/W33	SR 19-16	LOR 84	LOR 60	AN 16	W 16	67
	3 5/8	3	**FSAF 22216**	FSAF 216	22216 E	SR 16-13	LOR 82	LOR 54	AN 16	W 16	34
			FSAF 22316	FSAF 316	22316 CC/W33	SR 19-16	LOR 84	LOR 60	AN 16	W 16	67
85	3 15/16	3 3/16	**SAF 22217**	SAF 217	22217 E	SR 17-14	LOR 89	LOR 63	AN 17	W 17	37
			SAF 22317	SAF 317	22317 CC/W33	SR 20-17	LOR 109	LOR 188	AN 17	W 17	71
	3 15/16	3 3/16	**FSAF 22217**	FSAF 217	22217 E	SR 17-14	LOR 89	LOR 63	AN 17	W 17	35
			FSAF 22317	FSAF 317	22317 CC/W33	SR 20-17	LOR 109	LOR 188	AN 17	W 17	71
90	4 1/8	3 3/8	**SAF 22218**	SAF 218	22218 E	SR 18-15	LOR 112	LOR 191	AN 18	W 18	44
			SAF 22318	SAF 318	22318 CC/W33	SR 21-18	LOR 112	LOR 191	AN 18	W 18	92
	4 1/8	3 3/8	**FSAF 22218**	FSAF 218	22218 E	SR 18-15	LOR 112	LOR 191	AN 18	W 18	44
			SAW 23218	SAW 218	23218 CC/W33	SR 18-15	LOR 112	LOR 191	AN 18	W 18	48
100	4 1/2	3 13/16	**SAF 22220**	SAF 220	22220 E	SR 20-17	LOR 118	LOR 106	AN 20	W 20	59
			SAF 22320	SAF 320	22320 CC/W33	SR 24-20	LOR 118	LOR 106	AN 20	W 20	107
	4 1/2	3 13/16	**FSAF 22220**	FSAF 220	22220 E	SR 20-17	LOR 118	LOR 106	AN 20	W 20	59
			SAW 23220	SAW 220	23220 CC/W33	SR 20-17	LOR 118	LOR 106	AN 20	W 20	80
110	4 7/8	4 3/16	**SAF 22222**	SAF 222	22222 E	SR 22-19	LOR 121	LOR 113	AN 22	W 22	68
			SAF 22322	SAF 322	22322 CC/W33	SR 0-22	LOR 121	LOR 113	AN 22	W 22	145
			SAWS 23222	SAWS 222	23222 CC/W33	SR 22-19	LOR 121	LOR 113	AN 22	W 22	91

[1] Optional internal radial clearance (e.g. C3) available on request

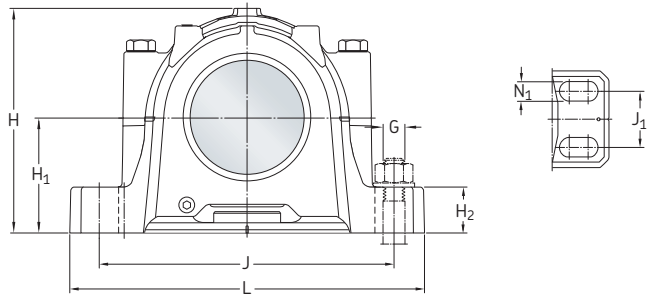

Complete pillow block

Designation	Dimensions												
	A_1	A_2	S	b_a	H	H_1	H_2	J_{min}	J_{max}	J_1	L	N_1	G
–	in.												
SAF 22216	3 1/2	5	3/16	1 15/32	6 11/16	3.500	1 1/4	9 5/8	11	–	13	7/8	3/4
SAF 22316	3 7/8	6 1/2	3/16	1 15/16	8 1/4	4.250	1 3/4	10 5/8	12 5/8	–	14 1/4	7/8	3/4
FSAF 22216	3 1/2	5	3/16	1 15/32	6 11/16	3.500	1 1/4	9 5/8	11	2 1/8	13	11/16	5/8
FSAF 22316	3 7/8	6 1/2	3/16	1 15/16	8 1/4	4.250	1 3/4	10 5/8	12 5/8	2 1/8	14 1/4	3/4	5/8
SAF 22217	3 1/2	5	3/16	1 9/16	7 1/8	3.750	1 1/4	9 7/8	11	–	13	7/8	3/4
SAF 22317	4 3/8	6 3/4	3/16	2 1/16	8 3/4	4.500	1 3/4	11 5/8	13 1/8	–	15 1/4	1	7/8
FSAF 22217	3 1/2	5	3/16	1 9/16	7 1/8	3.750	1 1/4	9 7/8	11	2 1/8	13	3/4	5/8
FSAF 22317	4 3/8	6 3/4	3/16	2 1/16	8 3/4	4.500	1 3/4	11 5/8	13 1/8	2 3/8	15 1/4	7/8	3/4
SAF 22218	3 7/8	5 7/8	3/16	1 3/4	7 19/32	4.000	1 5/8	10 1/4	11 3/4	–	13 3/4	7/8	3/4
SAF 22318	4 3/8	6 7/8	3/16	2 3/16	9 1/4	4.750	2	12	13 1/2	2 1/4	15 1/2	7/8	3/4
FSAF 22218	3 7/8	5 7/8	3/16	1 3/4	7 19/32	4.000	1 5/8	10 3/8	11 5/8	2 1/8	13 3/4	11/16	5/8
SAW 23218	3 7/8	5 7/8	3/16	1 29/32	7 19/32	4.000	1 5/8	10 3/8	11 5/8	2 1/8	13 3/4	11/16	5/8
SAF 22220	4 3/8	6 1/32	3/16	1 59/64	8 9/16	4.500	1 3/4	11 5/8	13 1/8	–	15 1/4	1	7/8
SAF 22320	4 3/4	7 5/16	3/16	2 7/16	10 3/16	5.250	2 1/8	13 1/4	14 1/2	2 3/4	16 1/2	7/8	3/4
FSAF 22220	4 3/8	6 1/32	3/16	1 59/64	8 9/16	4.500	1 3/4	11 5/8	13 1/8	2 3/8	15 1/4	13/16	3/4
SAW 23220	4 3/8	6 3/16	3/16	2 1/16	8 3/4	4.500	1 3/4	11 5/8	13 1/8	2 3/8	15 1/4	5/8	1/2
SAF 22222	4 3/4	6 1/2	3/16	2 1/8	9 7/16	4.938	2	12 5/8	14 1/2	2 3/4	16 1/2	7/8	3/4
SAF 22322	5 1/4	8 1/8	3/16	2 5/8	11 5/16	6.000	2 3/8	14 5/8	16	3 1/4	18 3/8	1	7/8
SAWS 23222	4 3/4	7 7/8	3/16	2 3/8	9 5/8	4.938	2	12 5/8	14 1/2	2 3/4	16 1/2	7/8	3/4

8.5 SAF and SAW pillow blocks with spherical roller bearings with a cylindrical bore
Series SAF 222(00), 223(00) and SAW series 232(00)
d_a **120 – 180** mm

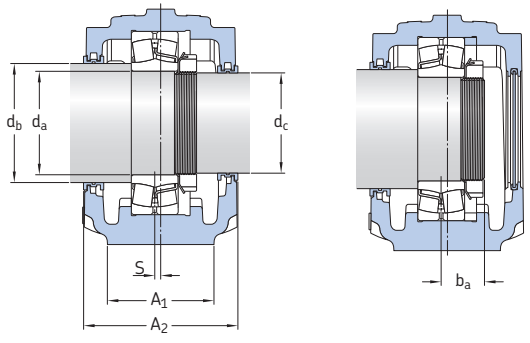

Shaft diameter			Complete pillow block	Components							Mass
				Pillow block housing	Bearing[1]	Stabilizing ring	Labyrinth seals		Lock nut	Locking washer	
							Shaft diameter	Shaft diameter			
d_a	d_b	d_c				(1 incl.)	d_b	d_c			
mm	in.		–	–							lb.
120	5 5/16	4 9/16	**SAF 22224**	SAF 224	22224 E	SR 24-20	LOR 127	LOR 119	AN 24	W 24	97
			SAF 22324	SAF 324	22324 CC/W33	SR 0-24	LOR 127	LOR 119	AN 24	W 24	201
			SAW 23224	SAW 224	23224 CC/W33	SR 24-20	LOR 127	LOR 119	AN 24	W 24	105
130	5 7/8	4 15/16	**SAF 22226**	SAF 226	22226 E	SR 26-0	LOR 136	LOR 122	AN 26	W 26	134
			SAF 22326	SAF 326	22326 CC/W33	SR 0-26	LOR 136	LOR 122	AN 26	W 26	221
			SAW 23226	SAW 226	23226 CC/W33	SR 26-0	LOR 136	LOR 122	AN 26	W 26	155
140	6 1/4	5 5/16	**SAF 22228**	SAF 228	22228 CC/W33	SR 28-0	LOR 144	LOR 127	AN 28	W 28	149
			SAF 22328	SAF 328	22328 CC/W33	SR 0-28	LOR 144	LOR 127	AN 28	W 28	283
			SAW 23228	SAW 228	23228 CC/W33	SR 28-0	LOR 144	LOR 127	AN 28	W 28	180
150	6 5/8	5 3/4	**SAF 22230**	SAF 230	22230 CC/W33	SR 30-0	LOR 151	LOR 134	AN 30	W 30	187
			SAF 22330	SAF 330	22330 CC/W33	SR 36-30	LOR 151	LOR 134	AN 30	W 30	313
			SAW 23230	SAW 230	23230 CC/W33	SR 30-0(1)	LOR 151	LOR 134	AN 30	W 30	204
160	7	6 1/16	**SAF 22232**	SAF 232	22232 CC/W33	SR 32-0	LOR 156	LOR 142	AN 32	W 32	208
			SAF 22332	SAF 332	22332 CC/W33	SR 38-32	LOR 156	LOR 142	AN 32	W 32	385
			SAW 23232	SAW 232	23232 CC/W33	SR 32-0(1)	LOR 156	LOR 142	AN 32	W 32	245
170	7 7/16	6 7/16	**SAF 22234**	SAF 234	22234 CC/W33	SR 34-0	LOR 161	LOR 148	AN 34	W 34	263
			SAF 22334	SAF 334	22334 CC/W33	SR 40-34	LOR 161	LOR 148	AN 34	W 34	449
			SAW 23234	SAW 234	23234 CC/W3	SR 34-0(1)	LOR 161	LOR 148	AN 34	W 34	298
180	7 13/16	6 7/8	**SAF 22236**	SAF 236	22236 CC/W33	SR 36-30	LOR 165	LOR 154	AN 36	W 36	286
			SAW 23236	SAW 236	23236 CC/W33	SR 36-30	LOR 165	LOR 154	AN 36	W 36	286

[1] Optional internal radial clearance (e.g. C3) available on request

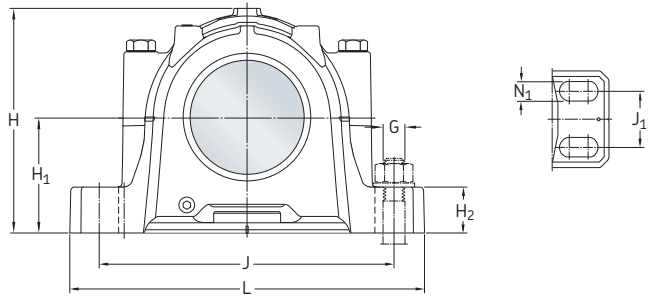

Complete pillow block

Designation	Dimensions												
	A_1	A_2	S	b_a	H	H_1	H_2	J_{min}	J_{max}	J_1	L	N_1	G
–	in.												
SAF 22224	4 3/4	7 3/8	3/16	2 9/32	10 1/8	5.250	2 1/8	13 1/4	14 1/2	2 3/4	16 1/2	7/8	3/4
SAF 22324	6 1/4	8 3/8	3/16	2 13/16	12 1/2	6.312	2 1/2	17	18 1/4	3 3/4	21 1/4	1 1/8	1
SAW 23224	4 3/4	7 3/8	3/16	2 17/32	10 1/8	5.250	2 1/8	13 1/4	14 1/2	2 3/4	16 1/2	7/8	3/4
SAF 22226	5 1/4	7 5/8	3/16	2 15/32	11 5/8	6.000	2 3/8	14 5/8	16	3 1/4	18 3/8	15/16	7/8
SAF 22326	6 1/4	8 3/4	3/16	3	13 5/16	6.688	2 5/8	17 3/8	19 1/4	3 3/4	22	1 1/8	1
SAW 23226	5 1/4	7 5/8	3/16	2 3/4	11 5/8	6.000	2 3/8	14 5/8	16	3 1/4	18 3/8	15/16	7/8
SAF 22228	5 7/8	7 5/8	3/16	2 29/64	12 1/32	6.000	2 3/8	15 5/8	17 3/8	3 3/8	20 1/8	1 1/8	1
SAF 22328	6 3/4	9 3/8	3/16	3 1/4	14 3/16	7.062	2 3/4	19 3/8	21 5/8	4 1/4	24 3/4	1 1/8	1
SAW 23228	5 7/8	9 1/8	3/16	2 31/32	11 3/4	6.000	2 3/8	16	17 1/8	3 3/8	20 1/8	1 1/8	1
SAF 22230	6 1/4	8 1/2	3/16	2 39/64	12 5/8	6.312	2 1/2	17	18 1/4	3 3/4	21 1/4	1 1/8	1
SAF 22330	7 1/8	9 3/4	3/16	3 7/16	14 7/8	7.500	3	20 7/8	23 5/8	4 5/8	26 3/4	1 1/8	1
SAW 23230	6 1/4	8 1/2	3/16	3 1/16	12 1/2	6.312	2 1/2	17	18 1/4	3 3/4	21 1/4	1 3/4	1
SAF 22232	6 1/4	8 3/4	3/16	2 31/32	13 1/4	6.688	2 5/8	17 3/8	19 1/4	3 3/4	22	1 1/8	1
SAF 22332	7 1/2	10 3/4	3/16	3 5/8	15 11/16	7.875	3 1/8	21 5/8	24 3/8	4 1/2	28	1 3/8	1 1/4
SAW 23232	6 1/4	8 7/8	3/16	3 1/4	13 1/4	6.688	2 5/8	17 3/8	19 1/4	3 3/4	22	1 1/8	1
SAF 22234	6 3/4	9 9/16	3/16	3 1/8	14 3/16	7.062	2 3/4	19 3/8	21 5/8	4 1/4	24 3/4	1 1/8	1
SAF 22334	8	11 1/4	3/16	3 3/4	16 1/2	8.250	3 3/8	22 1/2	25	5	29 1/2	1 3/8	1 1/4
SAW 23234	6 3/4	9 1/2	3/16	3 15/32	14 3/16	7.062	2 3/4	19 3/8	21 5/8	4 1/4	24 3/4	1 1/8	1
SAF 22236	7 1/8	10	3/16	3 9/64	14 7/8	7.500	3	20 7/8	23 5/8	4 5/8	26 3/4	1 1/8	1
SAW 23236	7 1/8	10	3/16	3 21/32	14 7/8	7.500	3	20 7/8	23 5/8	4 5/8	26 3/4	1 1/8	1

8.5 SAF and SAW pillow blocks with spherical roller bearings with a cylindrical bore
Series SAF 222(00), 223(00) and SAW series 232(00)
d_a **190 – 220** mm

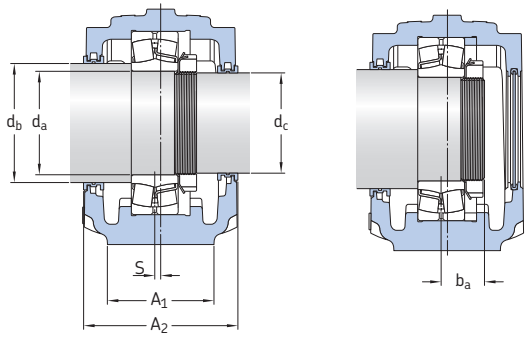

Shaft diameter			Complete pillow block	Components							Mass
				Pillow block housing	Bearing[1]	Stabilizing ring	Labyrinth seals		Lock nut	Locking washer	
							Shaft diameter	Shaft diameter			
d_a	d_b	d_c				(1 incl.)	d_b	d_c			
mm	in.		–	–							lb.
190	8 3/8	7 1/4	**SAF 22238**	SAF 238	22238 CC/W33	SR 38-32	LOR 171	LOR 160	AN 38	W 38	356
			SAF 22338	SAF 338	22338 CC/W33	SR 44-38	LOR 171	LOR 160	AN 38	W 38	589
			SAW 23238	SAW 238	23238 CC/W33	SR 38-32	LOR 171	LOR 160	AN 38	W 38	430
200	8 3/4	7 5/8	**SAF 22240**	SAF 240	22240 CC/W33	SR 40-34	LOR 175	LOR 164	AN 40	W 40	408
			SAF 22340	SAF 340	22340 CC/W33	SR 0-40	LOR 175	LOR 164	AN 40	W 40	809
			SAW 23240	SAW 240	23240 CC/W33	SR 40-34	LOR 175	LOR 164	AN 40	W 40	515
220	9 9/16	8 5/16	**SAF 22244**	SAF 244	22244 CC/W33	SR 44-38	LOR 179	LOR 170	N 44	W 44	535
			SAW 23244	SAW 244	23244 CC/W33	SR 44-38	LOR 179	LOR 170	N 44	W 44	710

[1] Optional internal radial clearance (e.g. C3) available on request

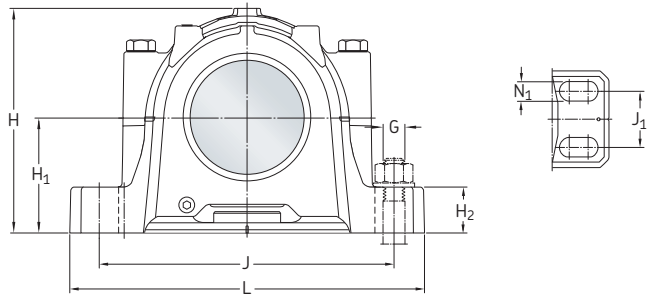

Complete pillow block

Designation	Dimensions												
	A_1	A_2	S	b_a	H	H_1	H_2	J_{min}	J_{max}	J_1	L	N_1	G
–	in.												
SAF 22238	7 1/2	10 3/4	3/16	3 19/64	15 11/16	7.875	3 1/8	21 5/8	24 3/8	4 1/2	28	1 3/8	1 1/4
SAF 22338	8 3/4	12	3/16	4 1/16	18 5/8	9.500	3 3/4	24 3/4	27 7/8	5 1/4	32 3/4	1 5/8	1 1/2
SAW 23238	7 1/2	10 7/8	3/16	3 27/32	15 11/16	7.875	3 1/8	21 5/8	24 3/8	4 1/2	28	1 3/8	1 1/4
SAF 22240	8	11 1/4	3/16	3 1/2	16 1/2	8.250	3 3/8	22 1/2	25	5	29 1/2	1 3/8	1 1/4
SAF 22340	9	12 3/8	3/16	4 1/8	19 1/2	9.875	4	26 1/4	29 1/2	5 1/2	34 1/4	1 5/8	1 1/2
SAW 23240	8	11 3/8	3/16	4 1/16	16 1/2	8.250	3 3/8	22 1/2	25	5	29 1/2	1 3/8	1 1/4
SAF 22244	8 3/4	12	3/16	3 5/8	18 5/8	9.500	3 3/4	24 3/4	27 7/8	5 1/4	32 3/4	1 5/8	1 1/2
SAW 23244	8 3/4	12 1/8	3/16	4 15/32	18 5/8	9.500	3 3/4	24 3/4	27 7/8	5 1/4	32 3/4	1 5/8	1 1/2

8.6 SAF pillow blocks with CARB bearings with a cylindrical bore
Series SAF C22(00) and C23(00)
d_a **65 – 90** mm

Units of measurement
In this chapter only imperial units are used. To convert imperial units to metric units, refer to the conversion table on **page 10**.

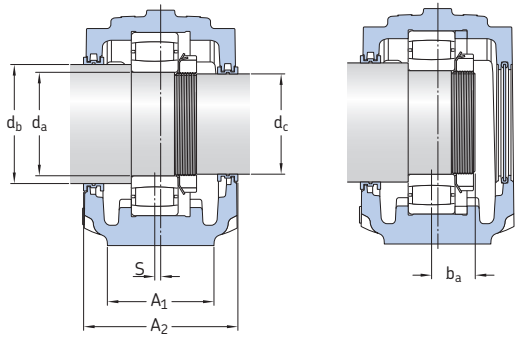

Shaft diameter			Complete pillow block	Components					Lock nut	Locking washer	Mass
				Pillow block housing	Bearing[1]	Stabilizing ring (1 incl.)	Labyrinth seals[2] Shaft diameter d_b	Shaft diameter d_c			
d_a	d_b	d_c	–	–							
mm	in.		–	–							lb.
65	3 1/16	2 7/16	**SAF C2213**	SAF 213	C 2213 TN9	SR 13-0	LOR 55	LOR 37	KMFE 13	–	22
70	3 1/4	2 5/8	**SAF C2314**	SAF 314	C 2314	SR 17-14	LOR 64	LOR 43	N 14	W 14	42
			FSAF C2314	FSAF 314	C 2314	SR 17-14	LOR 64	LOR 43	N 14	W 14	42
75	3 7/16	2 13/16	**SAF C2215**	SAF 215	C 2215	SR 15-0	LOR 79	LOR 46	KMFE 15	–	27
			SAF C2315	SAF 315	C 2315	SR 18-15	LOR 79	LOR 46	AN 15	W 15	48
	3 7/16	2 13/16	**FSAF C2215**	FSAF 215	C 2215	SR 15-0	LOR 79	LOR 46	KMFE 15	–	27
			FSAF C2315	FSAF 315	C 2315	SR 18-15	LOR 79	LOR 46	AN 15	W 15	48
80	3 5/8	3	**SAF C2216**	SAF 216	C 2216	SR 16-13	LOR 82	LOR 54	KMFE 16	–	34
			SAF C2316	SAF 316	C 2316	SR 19-16	LOR 84	LOR 60	AN 16	W 16	67
	3 5/8	3	**FSAF C2216**	FSAF 216	C 2216	SR 16-13	LOR 82	LOR 54	KMFE 16	–	34
			FSAF C2316	FSAF 316	C 2316	SR 19-16	LOR 84	LOR 60	AN 16	W 16	67
85	3 15/16	3 3/16	**SAF C2217**	SAF 217	C 2217	SR 17-14	LOR 89	LOR 63	KMFE 17	–	35
			SAF C2317	SAF 317	C 2317	SR 20-17	LOR 109	LOR 188	AN 17	W 17	71
	3 15/16	3 3/16	**FSAF C2217**	FSAF 217	C 2217	SR 17-14	LOR 89	LOR 63	KMFE 17	–	35
			FSAF C2317	FSAF 317	C 2317	SR 20-17	LOR 109	LOR 188	AN 17	W 17	71
90	4 1/8	3 3/8	**SAF C2218**	SAF 218	C 2218	SR 18-15	LOR 112	LOR 191	KMFE 18	–	44
			SAF C2318	SAF 318	C 2318	SR 21-18	LOR 112	LOR 191	AN 18	W 18	92
	4 1/8	3 3/8	**FSAF C2218**	FSAF 218	C 2218	SR 18-15	LOR 112	LOR 191	KMFE 18	–	44

[1] Optional internal radial clearance (e.g. C3) available on request
[2] For the best possible axial displacement capability, an LER type seal can be used instead of the LOR type seal that comes standard with the housing (→ **table 1**, **page 390**)

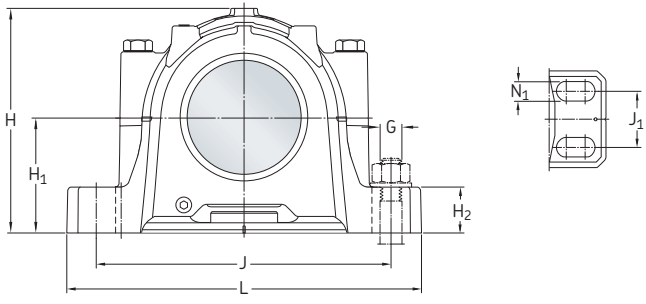

Complete pillow block

Designation	Dimensions												
	A_1	A_2	S	b_a	H	H_1	H_2	J_{min}	J_{max}	J_1	L	N_1	G
–	in.												
SAF C2213	3 1/8	4 1/2	5/32	1 25/64	5 13/16	3.000	1	8 1/8	9 1/2	–	11	3/4	5/8
SAF C2314	3 1/2	5 3/8	3/16	1 11/16	7 3/8	3.750	1 1/4	9 7/8	11	–	13	7/8	3/4
FSAF C2314	3 1/2	5 3/8	3/16	1 11/16	7 3/8	3.750	1 1/4	9 7/8	11	2 1/8	13	3/4	5/8
SAF C2215	3 1/8	4 11/16	1/8	1 7/16	6 7/32	3.250	1 1/8	8 5/8	9 5/8	–	11 1/4	3/4	5/8
SAF C2315	3 7/8	5 7/8	3/16	1 7/8	7 9/16	4.000	1 5/8	10 3/8	11 5/8	–	13 3/4	7/8	3/4
FSAF C2215	3 1/8	4 11/16	1/8	1 7/16	6 7/32	3.250	1 1/8	8 5/8	9 5/8	1 7/8	11 1/4	5/8	1/2
FSAF C2315	3 7/8	5 7/8	3/16	1 7/8	7 9/16	4.000	1 5/8	10 3/8	11 5/8	2 1/8	13 3/4	3/4	5/8
SAF C2216	3 1/2	5	3/16	1 15/32	6 11/16	3.500	1 1/4	9 5/8	11	–	13	7/8	3/4
SAF C2316	3 7/8	6 1/2	3/16	1 15/16	8 1/4	4.250	1 3/4	10 5/8	12 5/8	–	14 1/4	7/8	3/4
FSAF C2216	3 1/2	5	3/16	1 15/32	6 11/16	3.500	1 1/4	9 5/8	11	2 1/8	13	11/16	5/8
FSAF C2316	3 7/8	6 1/2	3/16	1 15/16	8 1/4	4.250	1 3/4	10 5/8	12 5/8	2 1/8	14 1/4	3/4	5/8
SAF C2217	3 1/2	5	3/16	1 9/16	7 1/8	3.750	1 1/4	9 7/8	11	–	13	7/8	3/4
SAF C2317	4 3/8	6 3/4	3/16	2 1/16	8 3/4	4.500	1 3/4	11 5/8	13 1/8	–	15 1/4	1	7/8
FSAF C2217	3 1/2	5	3/16	1 9/16	7 1/8	3.750	1 1/4	9 7/8	11	2 1/8	13	3/4	5/8
FSAF C2317	4 3/8	6 3/4	3/16	2 1/16	8 3/4	4.500	1 3/4	11 5/8	13 1/8	2 3/8	15 1/4	7/8	3/4
SAF C2218	3 7/8	5 7/8	3/16	1 3/4	7 19/32	4.000	1 5/8	10 1/4	11 3/4	–	13 3/4	7/8	3/4
SAF C2318	4 3/8	6 7/8	3/16	2 3/16	9 3/16	4.750	2	12	13 1/2	2 1/4	15 1/2	7/8	3/4
FSAF C2218	3 7/8	5 7/8	3/16	1 3/4	7 19/32	4.000	1 5/8	10 3/8	11 5/8	2 1/8	13 3/4	11/16	5/8

8.6 SAF pillow blocks with CARB bearings with a cylindrical bore
Series SAF C22(00) and C23(00)
d_a **100 – 220** mm

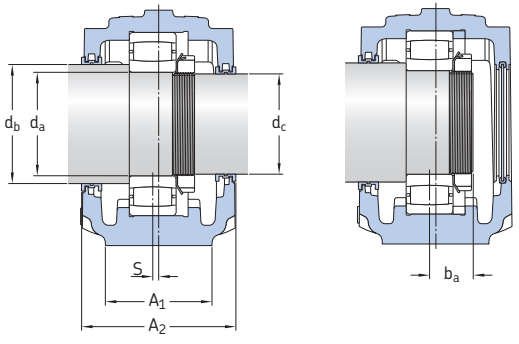

Shaft diameter			Complete pillow block	Components							Mass
				Pillow block housing	Bearing[1]	Stabilizing ring (1 incl.)	Labyrinth seals[2] Shaft diameter d_b	Shaft diameter d_c	Lock nut	Locking washer	
d_a	d_b	d_c									
mm	in.		–	–							lb.
100	4 1/2	3 13/16	**SAF C2220**	SAF 220	C 2220	SR 20-17	LOR 118	LOR 106	KMFE 20	–	59
			SAF C2320	SAF 320	C 2320	SR 24-20	LOR 118	LOR 106	AN 20	W 20	107
	4 1/2	3 13/16	**FSAF C2220**	FSAF 220	C 2220	SR 20-17	LOR 118	LOR 106	KMFE 20	–	59
110	4 7/8	4 3/16	**SAF C2222**	SAF 222	C 2222	SR 22-19	LOR 121	LOR 113	KMFE 22	–	88
130	5 7/8	4 15/16	**SAF C2226**	SAF 226	C 2226	SR 26-0	LOR 136	LOR 122	KML 26	MBL 26	134
140	6 1/4	5 5/16	**SAF C2228**	SAF 228	C 2228	SR 28-0	LOR 144	LOR 127	KML 28	MBL 28	149
150	6 5/8	5 3/4	**SAF C2230**	SAF 230	C 2230	SR 30-0	LOR 151	LOR 134	KML 30	MBL 30	187
170	7 7/16	6 7/16	**SAF C2234**	SAF 234	C 2234	SR 34-0	LOR 161	LOR 148	KML 34	MBL 34	263
190	8 3/8	7 1/4	**SAF C2238**	SAF 238	C 2238	SR 38-32	LOR 171	LOR 160	KML 38	MBL 38	356
220	9 9/16	8 5/16	**SAF C2244**	SAF 244	C 2244	SR 44-38	LOR 179	LOR 170	KML 44	MBL 44	535

[1] Optional internal radial clearance (e.g. C3) available on request
[2] For improved axial displacement capability, an LER type seal can be used instead of the LOR type seal that comes standard with the housing (→ **table 1**, **page 390**)

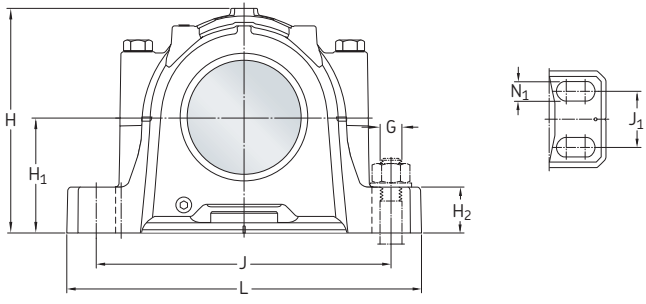

Complete pillow block

Designation	Dimensions												
	A_1	A_2	S	b_a	H	H_1	H_2	J_{min}	J_{max}	J_1	L	N_1	G
–	in.												
SAF C2220	4 3/8	6 1/32	3/16	1 59/64	8 9/16	4.500	1 3/4	11 5/8	13 1/8	–	15 1/4	1	7/8
SAF C2320	4 3/4	7 5/16	3/16	2 7/16	10 3/16	5.250	2 1/8	13 1/4	14 1/2	2 3/4	16 1/2	7/8	3/4
FSAF C2220	4 3/8	6 1/32	3/16	1 59/64	8 9/16	4.500	1 3/4	11 5/8	13 1/8	2 3/8	15 1/4	13/16	3/4
SAF C2222	4 3/4	6 1/2	3/16	2 1/8	9 7/16	4.938	2	12 5/8	14 1/2	2 3/4	16 1/2	7/8	3/4
SAF C2226	5 1/4	7 5/8	3/16	2 15/32	11 5/8	6.000	2 3/8	14 5/8	16	3 1/4	18 3/8	15/16	7/8
SAF C2228	5 7/8	7 5/8	3/16	2 29/64	12 1/32	6.000	2 3/8	15 5/8	17 3/8	3 3/8	20 1/8	1 1/8	1
SAF C2230	6 1/4	8 1/2	3/16	2 39/64	12 5/8	6.312	2 1/2	17	18 1/4	3 3/4	21 1/4	1 1/8	1
SAF C2234	6 3/4	9 9/16	3/16	3 1/8	14 3/16	7.062	2 3/4	19 3/8	21 5/8	4 1/4	24 3/4	1 1/8	1
SAF C2238	7 1/2	10 3/4	3/16	3 19/64	15 11/16	7.875	3 1/8	21 5/8	24 3/8	4 1/2	28	1 3/8	1 1/4
SAF C2244	8 3/4	12	3/16	3 5/8	18 5/8	9.500	3 3/4	24 3/4	27 7/8	5 1/4	32 3/4	1 5/8	1 1/2

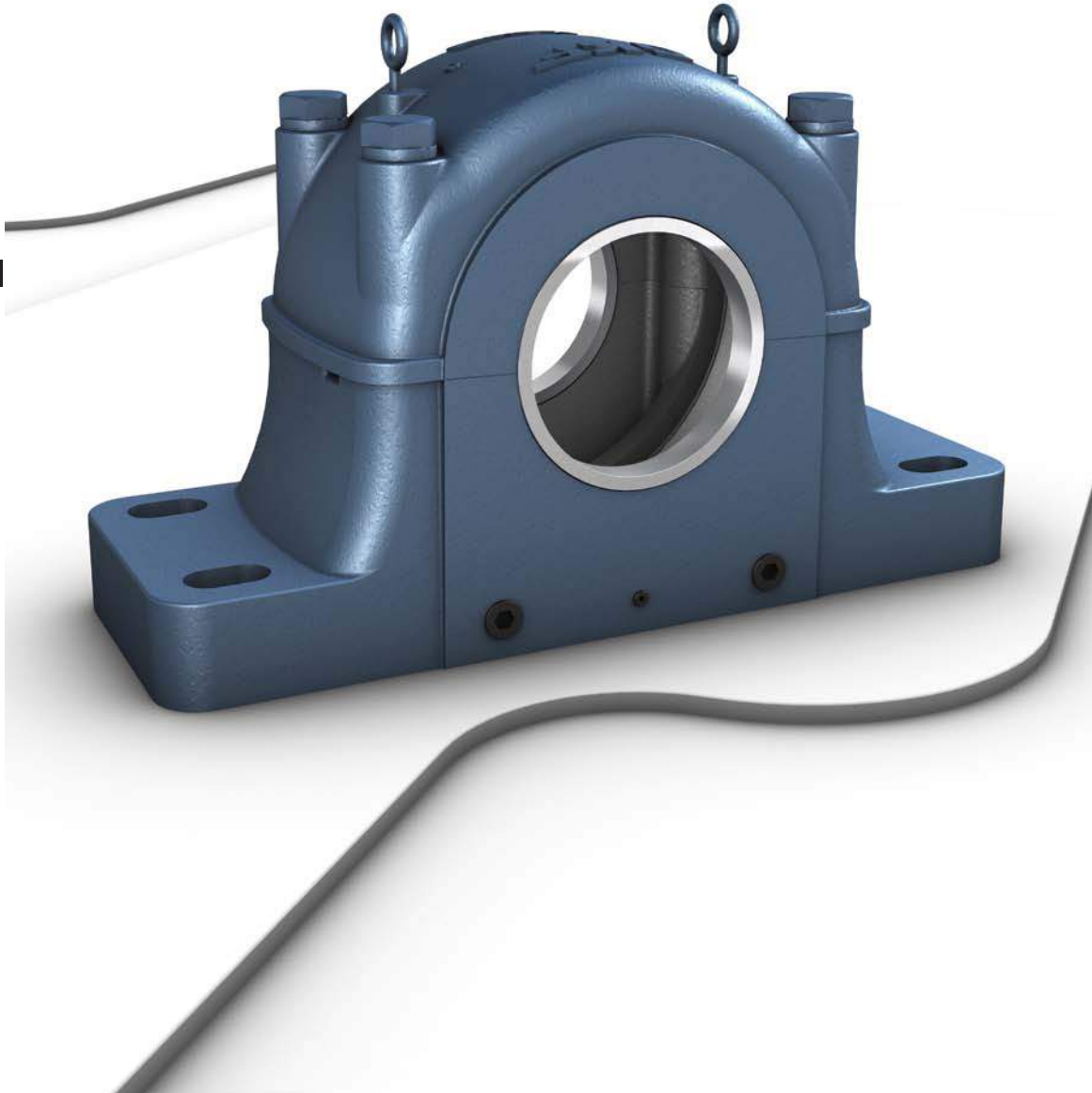

Split pillow blocks SDAF series including the extended range (inch dimensions)

Bearing types
- Spherical roller bearings
- CARB toroidal roller bearings

Bearing dimension series
- 22, 23 (SDAF)
- 30, 31, 32 (SDAF extended range)

Shaft diameter range
- 2 15/16 to 9 9/16 in. (SDAF)
- 9 in. and larger (SDAF extended range)

Typical shaft-bearing combinations
- Plain shaft with bearing on an adapter sleeve
- Stepped shaft with bearing on a cylindrical seat

Seals
- Labyrinth
- Contact
- Heavy-duty

Lubrication
- Grease
- Oil

Materials
- Grey cast iron
- Ductile iron (Spheroidal graphite cast iron)
- Cast steel

Mounting
- Four-bolt mounting

Compliance to standards
- Not standardized

All SDAF housings, which include the SDAF extended range, are heavy duty split pillow (plummer) block housings designed for tough operating conditions where heavy loads and shock loads require a housing that is exceptionally sturdy. All SDAF housings are made to order.

SDAF housings can accommodate bearings in the 22 and 23 dimension series for shaft diameters ranging from 2 15/16 to 9 9/16 inches. SDAF extended range housings can accommodate bearings in the 30, 31 and 32 dimension series for shaft diameters ranging from 8 15/16 to 20 inches and larger. Housings in the extended range are typically customized to meet the needs of a particular application.

Units of measurement
In this chapter only imperial units are used. To convert imperial units to metric units, refer to the conversion table on **page 10**.

Split pillow blocks SDAF series including the extended range (inch dimensions)

Designations 451

Standard housing design 452
Features and benefits 452
Housing material 453

Housing variants and customization . 453
Housing material 453
Paint, corrosion protection 453

Sealing solutions 454
Labyrinth seals 454
Labyrinth rings with an internal contact element 460
Taconite heavy-duty seals 460
Contact seals 461
End plugs 461

Special seals 462

Design considerations 462
Typical shaft-bearing combinations . . . 462
Locating and non-locating bearing positions 463
Load carrying capacity 463
Operating temperature 466
Operating speed 466
Shaft specifications 466
Attachment bolt recommendations 466

Lubrication 467
Initial grease fill 467
Relubrication 468
Oil lubrication 468

Mounting 470

Condition Monitoring 470

Ordering Information 470

Product tables
9.1 SDAF pillow blocks with spherical roller bearings on an adapter sleeve (Series 225(00), 226(00)) 472
9.2 SDAF pillow blocks with spherical roller bearings with a cylindrical bore (Series 222(00), 223(00)) 474
9.3 SDAF extended range pillow blocks with spherical roller bearings on an adapter sleeve (Series 230(00) KA, 231(00) KA, 232(00) KA) 476
9.4 SDAF extended range pillow blocks with spherical roller bearings with a cylindrical bore (Series 230(00), 231(00), 232(00)) 480

Designations

Designation system for SDAF housings and standard SDAF extended range housings

SDAF_22634 TA

Housing series

S	Standard pillow block
D	Heavy-duty series
A	Inch dimensions
F	Labyrinth seal

Material

–	Cast iron (standard)
D	Ductile iron (spheroidal graphite cast iron)
S	Cast steel

Size identification

222(00)	Kits with spherical roller bearings with a cylindrical bore, diameter series 2
223(00)	Kits with spherical roller bearings with a cylindrical bore, diameter series 3
225(00)	Kits with spherical roller bearings on an adapter sleeve, diameter series 2
226(00)	Kits with spherical roller bearings on an adapter sleeve, diameter series 3
230(00)	Kits with spherical roller bearings with a cylindrical bore, diameter series 0
230(00) KA	Kits with spherical roller bearings on an adapter sleeve, diameter series 0
231(00)	Kits with spherical roller bearings with a cylindrical bore, diameter series 1
231(00) KA	Kits with spherical roller bearings on an adapter sleeve, diameter series 1
232(00)	Kits with spherical roller bearings with a cylindrical bore, diameter series 2
232(00) KA	Kits with spherical roller bearings on an adapter sleeve, diameter series 2
..20 to 96	Size code, related to the bearing bore size
../500 to /530	Size code, related to the bearing bore size

Suffix[1)]

T	Taconite seal with contact seal or bolt-on taconite seals
TV	Taconite seal with V-ring
TA or TVA	Taconite seal with button head grease fitting
TB or TVB	Taconite seal with giant button head grease fitting
Y	One end closed (i.e. supplied with end plugs)
/VZ...	Special feature / modification

[1)] When multiple suffixes are used, they are listed in the same order as shown here.

Standard housing design

All SDAF housings, which include the extended range, are split pillow (plummer) block housings consisting of a cap and base (→ **fig. 1**). Their robust design can accommodate shock loads and heavy loads from any direction. All SDAF housings have four holes in the base for attachment bolts and tapped holes in their caps for eye bolts.

Features and benefits

All SDAF housings share the following features and benefits:

Stiff housing

The caps and bases are reinforced with extra material (→ **fig. 2**). This improves heat flow away from the bearing outer ring and avoids distortion of the housing bore.

Caps and bases individually marked

The housing base and cap of all SDAF housings are matched during manufacture and are not interchangeable with the caps and bases of other housings. To help avoid mismatch, each cap and base are numbered (→ **fig. 3**).

Fig. 1

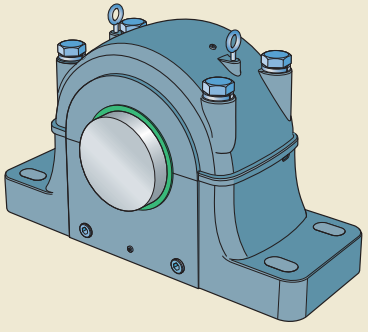

Fig. 2

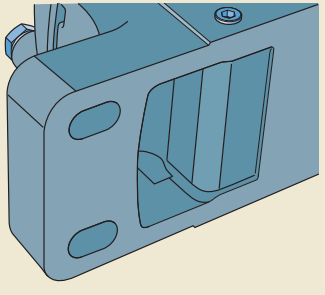

Fig. 3

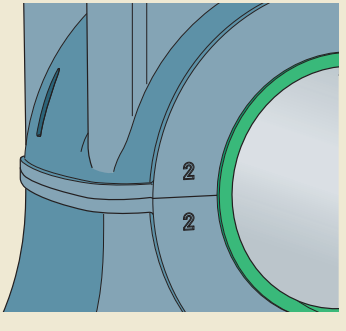

Housing material

SDAF housings are made standard from ASTM A48 grade 30 grey cast iron, which is equivalent to ISO 185 grade 200. SDAF extended range housings are made standard from ASTM A48 grade 40 grey cast iron, which is equivalent to ISO 185 grade 275.

Paint, corrosion protection

All SDAF housings are painted blue (RAL 5001). The paint protects the housing in accordance with ISO 12944-2, corrosivity category C2 (i.e. exterior atmospheres with low levels of pollution, interior atmospheres where condensation may occur). The paint is not affected by most lubricating or engine oils, cutting fluids or alkalescent washing chemicals. Housings can be repainted with most water solvent based 1- or 2-component paints.

Unpainted surfaces are protected with a rust inhibitor. Special paints or preservatives can be supplied on request.

Housing variants and customization

SDAF and SDAF extended range housings are available with design variants. All variants are individually engineered to meet the requirements of the specific application. Customized variants can include:

- drilled bolt holes in the base
- solid base
- special machining for lubrication
- special housing bore tolerances
- special seals
- milled base ends
- special machining for condition monitoring systems

Because of the highly customized nature of the SDAF extended range housings, the SKF application engineering service and the customer work together to specify and design each housing. This flexible approach provides a host of options tailored to the application, to provide a safe, reliable and cost-effective solution. For additional information contact the SKF application engineering service.

SDAF extended range housings are made-to-order to accommodate any special features that may be required.

Housing material

For applications where extra strength is needed, all SDAF housings are also available in the following materials:

- ductile iron, ASTM A339 grade 60-45-10
- ductile iron, ASTM A339 grade 80-60-03
- cast steel, ASTM A27 grade U-60-30

Sealing solutions

SDAF housings are available with the following sealing solutions (→ **fig. 4**):

- labyrinth seals (standard)
- labyrinth seals with an internal contact element (PosiTrac Plus)
- taconite heavy-duty seals
- contact seals
- end plugs (end covers)

PosiTrac, PosiTrac Plus and contact seals are not available for SDAF extended range housings.

Table 1, **page 456**, provides an overview of the characteristics and suitability of each sealing solution. Details are provided in the following text. This information should be used as a guideline, and does not substitute for testing a seal in its application. **Tables 2** and **3** on **page 458** and **460** provide an overview about which seals fit what housing.

Labyrinth seals

Labyrinth seals are the standard sealing solution for all SDAF housings. They form a multi-stage labyrinth seal with the seal grooves in the housing. If operating conditions require it, the sealing effect can be enhanced by filling the cavity between the housing and labyrinth ring with grease.

Labyrinth seals for SDAF housings

SDAF housings are supplied with either standard labyrinth seals (designation LER) or PosiTrac labyrinth seals (designation LOR). Both are made of aluminium (→ **fig. 4**). The PosiTrac labyrinth seals have an additional O-ring made of acrylonitrile-butadiene rubber (NBR) to make the labyrinth ring rotate with the shaft. Whether the standard labyrinth seal or the PosiTrac seal are supplied depends on housing size.

Fig. 4

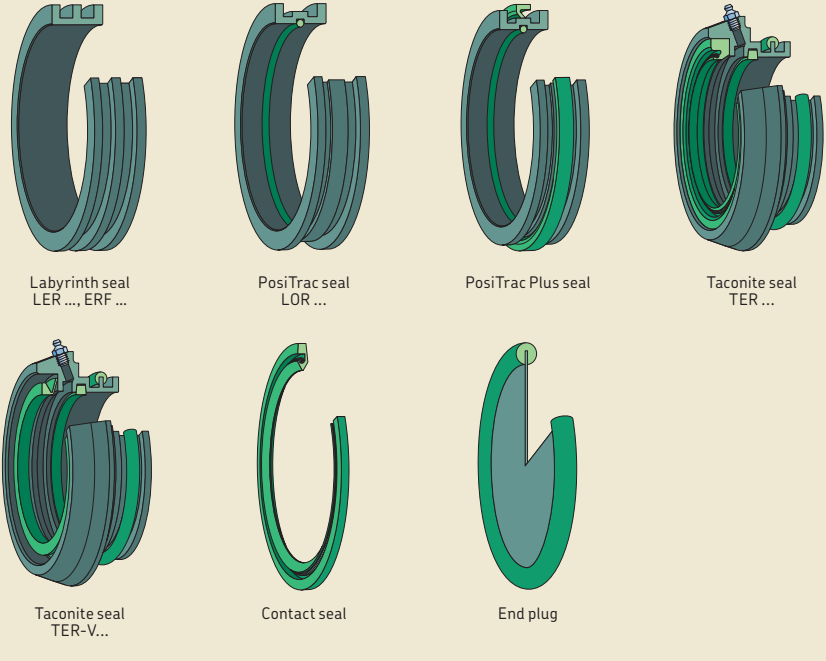

Labyrinth seals for SDAF extended range housings

SDAF extended range housings are supplied as standard with labyrinth rings made of steel, designation ERF (→ **fig. 4**). Special labyrinth rings with O-ring bore inserts are available on request.

Standard seals for SDAF and SDAF extended range plummer block housings

Seal	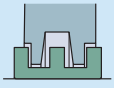	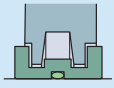	
Type	Labyrinth	PosiTrac	PosiTrac Plus
Designation	LER, ERF	LOR	LOR with B-10724
Material	aluminum or steel	aluminum, nitrile rubber	aluminum, nitrile rubber
Application conditions and requirements			
Temperature [°F]	–30 to 300	–30 to 220	–30 to 220
Max. circumferential speed	same as bearing	same as bearing	limited[1]
Misalignment [°]	0,3	0,3	0,3
Low friction	++	++	+
Axial shaft displacement	++	+	–
Vertical shaft arrangement	–	–	++
Grease relubrication	+	+	+
Oil lubrication	–	–	++
Replacement	+	+	+
Sealing suitability			
Dust	–	–	+
Fine particles	–	–	+
Coarse particles	+	+	+
Chips	+	+	–
Liquids when sprayed	––	––	–
Direct sunlight	+	+	+

Symbol:
- n/a not applicable
- ++ very suitable
- + suitable
- – limited suitability
- –– unsuitable

[1] For speed limits → **tables 2** and **3**.
[2] For more information, contact the SKF application engineering service.

Table 1

				
Contact	Taconite	Taconite (V-ring seal)	Bolt-on taconite split	End plug
B-9784	TER	TER V	–[2]	EPR, X 5217
nitrile rubber	steel, felt, nitrile rubber	steel, felt, nitrile rubber	cast iron, steel, nitrile rubber	steel, nitrile rubber
–30 to 220	–30 to 220	–30 to 220	–30 to 220	–30 to 220
limited[1]	limited[1]	limited[1]	limited	n/a
0,1	0,1	0,5	0,5	n/a
–	––	––	––	n/a
+	+	–	–	n/a
++	++	++	++	++
+	++	++	++	n/a
++	+	+	+	++
+	+	+	+	+
+	++	++	++	+
+	++	++	++	+
+	++	++	++	+
–	++	++	++	–
–	+	+	+	+
+	+	+	+	+

9

Seal chart for SDAF and SDAFS split pillow block housings

Shaft diameter	d_a 5(00) Series	d_a 6(00) Series	d_b 2(00) Series	d_c 2(00) Series	d_b 3(00) Series	d_c 3(00) Series	Labyrinth seal[1] Ring seal	O-Ring for LOR[2]
in.	in.							
2 13/16		617					LOR-57	AS-568-150
2 7/8		617					LOR-58	AS-568-150
2 15/16		617*					LOR-59	AS-568-151
3		617					LOR-60	AS-568-151
3 1/16		618					LER-67	–
4 9/16	526	626					LOR-119	38309-119
4 1/2			220*		320*		LER-205	–
4 9/16	528			224*		324*	LOR-119	38309-119
4 7/8	528		222*		322*		LOR-121	AS-568-159
4 15/16	528*			226*		326*	LOR-122	AS-568-159
5 1/8	530	630					LOR-124	AS-568-160
5 3/16	530*	630*					LOR-125	AS-568-160
5 1/4	530	630					LOR-126	AS-568-160
5 5/16	530	630	224*	228*	324*		LOR-127	38309-127
5 3/8	530	630					LOR-128	AS-568-161
5 3/8	532						LOR-129	AS-568-253
5 7/16	532*						LOR-130	AS-568-254
5 1/2	532						LOR-131	AS-568-254
5 7/16		632*					LER-211	–
5 3/4				230*		330*	LOR-134	AS-568-162
5 7/8			226*		326*		LOR-136	AS-568-163
5 15/16		634*					LER-215	–
6 1/16				232*			LOR-142	38309-142
6 1/16						332*	LER-217	–
6 1/4					228*		LOR 144	AS-568-164
6 5/16	536						LOR-146	38309-146
6 3/8	536						LOR-147	AS-568-260
6 7/16	536*						LOR-148	AS-568-260
6 1/2	536						LOR-149	AS-568-260
6 7/16		636*				334*	LER-220	–
6 5/8			230*		330*		LOR-151	AS-568-166
6 7/8				236*			LOR-154	AS-568-262
6 7/8						336*	LER-223	–
6 15/16	538*	638*					LER-224	–
7			232*				LOR-156	AS-568-262
7					332*		LER-225	–
7 3/16	540*	640*					LER-228	–
7 1/4				238*		338*	LER-229	–
7 7/16					334*		LER-230	–
7 5/8				240*			LER-233	-
7 13/16			236*				LOR-165	AS-568-266
7 13/16					336*		LER-234	–
7 15/16	544*						LER-236	–
8 5/16				244*			LER-239	–
8 3/8			238*		338*		LER-240	–
8 3/4			240*				LER-244	–
9 9/16			244*				LER-248	–

* = Standard shaft diameter, all others are optional shaft diameters
1) Speed rating is the same as bearing speed rating.
2) O-ring supplied with LOR is for replacement only, AS-568-... are industry standard O-rings available.
3) B-10724-... contact seals together with LOR labyrinth seals form PosiTrac Plus seals.

Table 2

Contact seal[3]	Speed limit[4]	Taconite seals with contact seal[5]	with V-Ring seal	Speed limit[4]	End plug
–	r/min	–		r/min	–
B-10724-184	1 950	TER-57	TER-57 V	1 050	EPR-10
B-10724-184	1 950	TER-58	TER-58 V	1 050	EPR-10
B-10724-184	1 950	TER-59	TER-59 V	1 050	EPR-10
B-10724-184	1 950	TER-60	TER-60 V	1 050	EPR-10
–[6]		TER-67	TER-67 V	950	EPR-11
B-10724-117	1 300	TER-119	TER-119 V	700	EPR-15
–[6]	–	TER-205	TER-205 V	675	–
B-10724-117	1 300	TER-119	TER-119 V	575	EPR-15
B-10724-122	1 150	TER-121	TER-121 V	625	–
B-10724-122	1 150	TER-122	TER-122 V	520	EPR-27
B-10724-125	1 075	TER-124	TER-124 V	590	EPR-16
B-10724-125	1 075	TER-125	TER-125 V	590	EPR-16
B-10724-125	1 075	TER-126	TER-126 V	590	EPR-16
B-10724-125	1 075	TER-127	TER-127 V	575	–
B-10724-125	1 075	TER-128	TER-128 V	575	EPR-16
B-10724-130	1 050	TER-129	TER-129 V	575	EPR-16
B-10724-130	1 050	TER-130	TER-130 V	560	EPR-16
B-10724-130	1 050	TER-131	TER-131 V	560	EPR-16
–[6]	–	TER-211	TER-211 V	560	EPR-17
B-10724-130	1 050	TER-134	TER-134 V	460	EPR-17
B-10724-130	1 050	TER-136	TER-136 V	520	–
–[6]	–	TER-215	TER-215 V	515	EPR-19
B-10724-140	950	TER-142	TER-142 V	435	EPR-18
–[6]	–	TER-217	TER-217 V	435	EPR-19
B-10724-144	925	TER-144	TER-144 V	–	–
B-10724-148	875	TER-146	TER-146 V	475	EPR-19
B-10724-148	875	TER-147	TER-147 V	475	EPR-19
B-10724-148	875	TER-148	TER-148 V	475	EPR-19
B-10724-148	875	TER-149	TER-149 V	475	EPR-19
–[6]	–	TER-220	TER-220 V	475	EPR-26
B-10724-151	850	TER-151	TER-151 V	460	–
B-10724-155	825	TER-154	TER-154 V	390	EPR-21
B-9784-130	750	TER-223	TER-223 V	390	EPR-21
–[6]	–	TER-224	TER-224 V	440	EPR-21
B-10724-155	825	TER-156	TER-156 V	435	–
–[6]	–	TER-225	TER-225 V	435	–
B-9784-140	800	TER-228	TER-228 V	425	EPR-22
B-9784-141	700	TER-229	TER-229 V	365	EPR-22
–[6]	–	TER-230	TER-230 V	410	–
B-9784-146	650	TER-233	TER-233 V	350	EPR-23
B-17024-167	725	TER-165	TER-165 V	390	–
B-9784-148	750	TER-234	TER-234 V	390	–
–[6]	–	TER-236	TER-236 V	385	EPR-24
–[6]	–	TER-239	TER-239 V	315	EPR-25
–[6]	–	TER-240	TER-240 V	365	–
B-9784-159	650	TER-244	TER-244 V	350	–
–[6]	–	TER-248	TER-248 V	315	–

[4] For stepped shaft housing designs, the largest shaft diameter defines the speed limit.
[5] Most taconite seals are made to order; contact SKF for availability, all V ring versions are made to order.
[6] For more information contact the SKF application engineering service.

Table 3

Seal chart for SDAF extended range housings

Shaft diameter	d_a 230(00) Series	d_a 231(00) Series	d_a 232(00) Series	Labyrinth seal[1] Ring seal	Taconite seal[2] with contact seal	with V-ring seal	Speed limit	End plug
in.	–			–	–		r/min.	–
8 15/16			3248 KA*[3]	ERF-914	TER-914	TER-914 V	280	X-5217-25
9			3248 KA	ERF-828	TER-828	TER-828 V	280	X-5217-25
9 7/16		3152 KA*[3]	3252 KA*[3]	ERF-891	TER-891	TER-891 V	275	X-5217-53
9 1/2		3152 KA	3252 KA	ERF-842	TER-842	TER-842 V	275	X-5217-53
9 15/16		3156 KA		ERF-845	TER-845	TER-845 V	270	X-5217-35
14	3076 KA	3176 KA		ERF-876	TER-876	TER-876 V	215	X-5217-12
14 15/16	3080 KA*[3]			ERF-882	TER-882	TER-882 V	200	–
14 15/16		3180 KA*[3]	3280 KA*[3]	ERF-976	TER-976	TER-976 V	200	–
15	3080 KA*[3]			ERF-847	TER-847	TER-847 V	200	X-5217-21
15 3/4	3084 KA*[3]			ERF-969	TER-969	TER-969 V	185	X-5217-23
15 3/4		3184 KA*[3]	3284 KA*[3]	ERF-907	TER-907	TER-907 V	185	X-5217-5
16 1/2	3088 KA*[3]	3188 KA*[3]	3288 KA*[3]	ERF-958	TER-958	TER-958 V	180	–
17	3092 KA*[3]	3192 KA*[3]		ERF-838	TER-838	TER-838 V	175	X-5217-48
18	3096 KA*[3]	3196 KA*[3]		ERF-888	TER-888	TER-888 V	170	–
18 1/2	230/500 KA*[3]			ERF-978	TER-978	TER-978 V	170	–
19 1/2	230/500 KA*[3]			ERF-926	TER-926	TER-926 V	165	–

* = Standard shaft diameter, all others are optional shaft diameters
1) Speed rating same as bearing speed rating
2) Bolt-on taconite seals should be used when taconite seals in the TER series are not available.
3) Contact the SKF application engineering service to review alternative optional shaft diameters as special machining of housing labyrinth grooves may be required.

Labyrinth rings with an internal contact element

PosiTrac Plus seals consist of a PosiTrac labyrinth ring (designation LOR) and a contact element made of acrylonitrile-butadiene rubber (NBR). The labyrinth ring is located on the shaft and held in place by an O-ring. The contact element is located in the seal groove in the housing. It can be mounted either for best contaminant exclusion or for best lubricant retention (→ **fig. 5**). When the contact element is mounted for best contaminant exclusion, the sealing effect can be enhanced by filling the seal cavity with grease. The designation for the contact element is B 10724 followed by a size code, for example B 10724-122.

Taconite heavy-duty seals

Taconite seals consist of an inboard felt seal, a grease cavity and an outboard seal that is available in two designs (→ **fig. 4**, **page 454**):

- Seals in the TER series include a split radial shaft seal made of NBR.
- Seals in the TER-V series include a V-ring seal.

To further protect against the ingress of contaminants, SKF taconite seals have a grease fitting to purge old grease and any trapped contaminants from the seal cavity, through the outboard seal.

Taconite heavy-duty seals are available for all smaller SDAF housings, but not all housings in the extended range.

Bolt-on taconite seals

Bolt-on taconite seals consist of a split cast iron auxiliary cover, a split radial shaft seal, a grease fitting and all mounting hardware. Bolt-on taconite seals were developed to accommodate the SDAF extended range housing and provide the equivalent sealing protection as the other taconite heavy-duty seals. All bolt-on taconite seals are custom manu-

factured during the production of the housing and should be ordered together with the housing.

Bolt-on taconite seals are available for all SDAF extended range housings. For SDAF extended range housings, the designation suffix T indicates bolt-on taconite seals, e.g. SDAF 23272 KAT x 13 7/16.

Contact seals

Contact seals are spring-loaded radial shaft seals made of NBR and fit into the seal groove in the housing (→ **fig. 4**, **page 454**). Contact seals are available for shaft diameters 6 7/8 and larger, where PosiTrac seals are not available. The designation for contact seals is B 9784 followed by a size code, e.g. B 9784-130.

End plugs

Housings at the end of a shaft should have an end plug (end cover) that fits into the seal groove in the housing (→ **fig. 4**, **page 454**). The plug consists of a metal plate with a strip made of acrylonitrile-butadiene rubber (NBR). Details of the permissible length of the shaft end are listed in the product tables. End plugs for SDAF and SDAF extended range housings are identified by the series designation EPR or X 5217, followed by the size identification.

Fig. 5

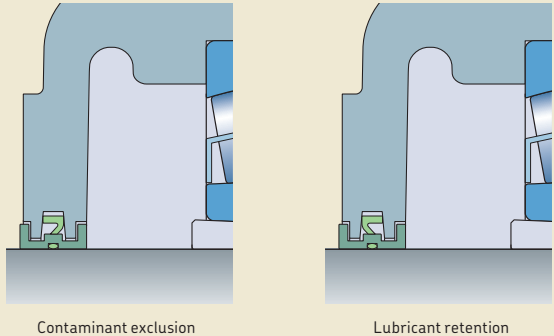

Contaminant exclusion | Lubricant retention

Special seals

In addition to the standard seal assortment, high-temperature contact seals and high-speed seals are available on request, for SDAF housings.

High-temperature seals

High-temperature contact seals (designation LORP) consist of a PTFE labyrinth ring with an FKM (fluoro rubber) O-ring and a PTFE contact element. The PTFE contact element is available separately (designation B-10785).

High-temperature seals can accommodate operating temperatures up to 400 °F. The limiting speed for the bearing can be attained.

High-speed seals

High-speed contact seals consist of an aluminium labyrinth ring with an NBR O-ring (designation LOR) and a PTFE contact element (designation B-10785). With PTFE contact elements, the limiting speed for the bearing can be attained.

WARNING!
Seals made of FKM (flouro rubber) or PTFE exposed to an open flame or temperatures above 570 °F are a health and environmental hazard! Contact SKF for detailed safety instructions.

Design considerations

For general information about system design, refer to the following sections:

- *Typical shaft-bearing combinations* (→ **page 41**)
- *Locating/non-locating bearing arrangements* (→ **page 40**)
- *Load carrying capacity* (→ **page 44**)
- *Axial load carrying capacity for bearings on sleeves* (→ **page 44**)
- *Specifications for shafts and housing support surfaces* (→ **page 45**)

For additional information about rolling bearings and adapter sleeves, refer to the product information available online at skf.com/bearings.

Typical shaft-bearing combinations

All SDAF housings can accommodate different shaft-bearing combinations (→ **fig. 6**):

- Plain shaft with bearing on an adapter sleeve
- Stepped shaft with bearing on a cylindrical seat

Plain shaft with bearing on an adapter sleeve

This arrangement is standard for SDAF pillow blocks in the 225 and 226 series and for SDAF extended range housings in the 230..KA, 231..KA and 232..KA series. Housings, appropriate parts and dimensions are listed in product **tables 9.1** (→ **page 472**) and **9.3** (→ **page 476**).

Stepped shaft with bearing on a cylindrical seat

This arrangement is standard for SDAF housings in the 222 and 223 series and for SDAF extended range housings in the 230, 231 and 232 series. Housings, appropriate parts and dimensions are listed in product **tables 9.2** (→ **page 474**) and **9.4** (→ **page 480**).

Locating and non-locating bearing positions

All SDAF housings can be used for both the locating and non-locating bearing positions.

The housings are machined standard for bearings in the non-locating position. Bearings in the locating position as well as CARB toroidal roller bearings must be secured in the housing with stabilizing (locating) rings. Appropriate stabilizing rings are supplied with smaller SDAF housings. For SDAF extended range housings, the stabilizing rings must be ordered separately.

Load carrying capacity

All SDAF housings are intended for loads acting perpendicularly toward the support surface. If the housing is supported over its entire base and the loads are purely perpendicular, loads are limited only by the bearing.

If loads acting in other directions occur, or if the housing is not supported over its entire base, be sure that the magnitude of the load is permissible for the housing and the attachment bolts.

Fig. 6

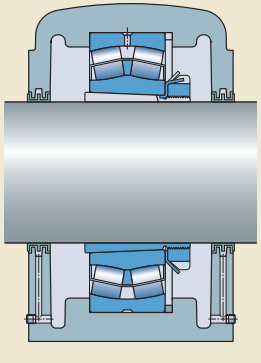

Plain shaft with bearing on an adapter sleeve

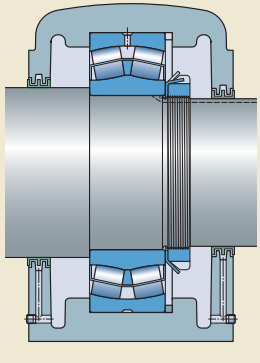

Stepped shaft with bearing on a cylindrical seat

Load carrying capacity of the housing

Guideline values for the safe loads of housings made of grey cast iron are listed in **tables 4** and **5**. The safe loads have been calculated using a safety factor of 5 against base fracture and a factor of 2 against cap bolt yield.

For housings made of ductile iron, the values obtained from **tables 4** and **5** should be multiplied by a factor of 1,5 for ASTM A339 grade 60-45-10. For information about ASTM A339 grade 80-60-03, contact the SKF application engineering service. For purely axial loads, static or dynamic, the loads on the housing should not exceed 65% of $P_{180°}$. For bearings mounted on adapter sleeves, the permissible axial load is dependent on the adapter sleeve.

Table 4

Safe loads and cap bolt information for SDAF cast iron housings

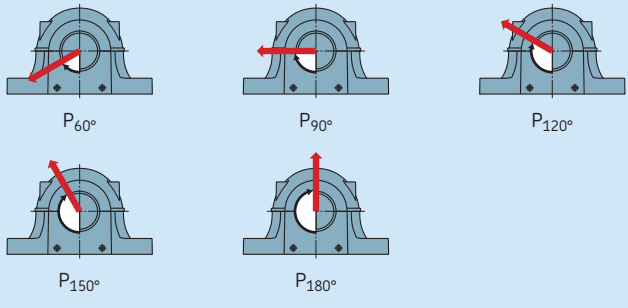

Housing Size				Recommended safe loads					Cap bolt information		
				$P_{60°}$	$P_{90°}$	$P_{120°}$	$P_{150°}$	$P_{180°}$	Cap bolt size	Torque	SAE grade
–				lbf.					in.	ft.-lbs.	
220	**317**	**520**	**617**	40 080	24 000	15 000	13 700	16 600	3/4-10	175	2
	318		**618**	45 900	27 500	17 300	16 000	19 300	3/4-10	175	2
222		**522**		51 700	31 000	19 600	17 600	21 200	7/8-9	165	2
224	**320**	**524**	**620**	54 000	36 500	23 600	21 600	26 500	7/8-9	165	2
226	**322**	**526**	**622**	60 100	36 000	23 600	21 600	27 000	7/8-9	165	2
230	**324**	**530**	**624**	85 100	51 000	32 000	29 000	35 500	1.1/8-7	350	2
232	**326**	**532**	**626**	83 500	50 000	31 500	28 500	34 500	1.1/8-7	350	2
238	**332**	**538**	**632**	127 000	76 500	47 500	43 000	52 000	1.1/4-7	350	2
240	**334**	**540**	**634**	150 000	90 000	56 000	50 000	60 000	1.1/4-7	350	2
	336		**636**	141 000	85 000	53 000	48 000	57 000	1.3/8-6	350	2
244	**338**	**544**	**638**	152 000	91 500	57 000	52 000	63 000	1.3/8-6	660	2
	340		**640**	144 000	86 500	54 000	49 000	58 500	1.3/8-6	660	2

Additional housing support

When the housing is subjected to loads acting parallel to the support surface, it may be necessary to pin the housing to the support surface or to provide a stop to counter the load. When loads act at angles between 60° and 120°, or when the axial loads are greater than 5% of $P_{180°}$, the housing should be pinned to the support surface or a stop should be provided to counter the load. The dowel pins or stop should be sufficiently strong to accommodate the loads acting parallel to the support surface.

Table 5

Safe loads and cap bolt information for SDAF extended range cast iron housings

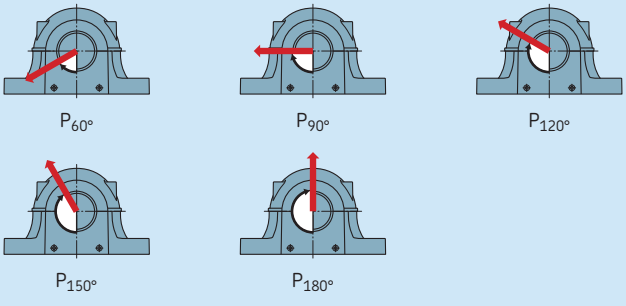

Housing Size			Recommended safe loads $P_{60°}$	$P_{90°}$	$P_{120°}$	$P_{150°}$	$P_{180°}$	Cap bolt information Cap bolt size	Torque	SAE grade
–			lbf.					in.	ft.-lbs.	
	3152	3248	294 000	17 600	110 000	98 000	118 000	1.1/2-6	1950	5
3060	3156	3252	408 000	245 000	156 000	143 000	176 000	1.1/2-6	1950	5
3064	3160	3256	408 000	245 000	156 000	143 000	176 000	1.1/2-6	1950	5
3068	3160	3256	408 000	245 000	156 000	143 000	176 000	1.1/2-6	1950	5
3072	3164	3260	442 000	265 000	170 000	153 000	186 000	1.3/4-5	2280	5
3076			442 000	265 000	170 000	153 000	186 000	1.3/4-5	2280	5
	3168	3264	517 000	310 000	200 000	186 000	228 000	1.7/8-5	2860	5
3080	3172	3268	650 000	390 000	245 000	224 000	275 000	1.3/4-5	2280	5
3084	3176		650 000	390 000	245 000	224 000	275 000	1.3/4-5	2280	5
3088	3180	3272	717 000	430 000	275 000	250 000	305 000	1.7/8-5	2860	5
3092		3276	717 000	430 000	275 000	250 000	305 000	1.7/8-5	2860	5
3096	3184	3280	1 050 000	630 000	405 000	375 000	465 000	2-4.1/4	3440	5
30/500	3188		1 050 000	630 000	405 000	375 000	465 000	2-4.1/4	3440	5
30/530	3192	3284	900 000	540 000	345 000	320 000	400 000	2.1/4-4.1/2	5030	5
	3196	3288	900 000	540 000	345 000	320 000	400 000	2.1/4-4.1/2	5030	5

Operating temperature

The permissible operating temperature is mainly limited by the seals (→ **table 1** on **page 456**) and the lubricant in the bearing. For temperature limits of SKF bearings and lubricants, refer to the product information available online at skf.com/bearings.

The housing material does not have any additional temperature limits, except for very low temperature applications where impact strength could be a factor. For additional information, contact the SKF application engineering service.

The housing paint is heat resistant up to 175 °F material temperature or 210 °F ambient temperature. When temperatures outside the permissible range are expected, contact the SKF application engineering service.

Operating speed

All seals, except non-contact labyrinth seals, limit the permissible operating speed. Speed limits for seals are provided in **table 1** on **page 456**. For speed limits of the bearing, refer to the product information available online at skf.com/bearings.

Shaft specifications

Table 6 lists the recommended shaft diameter tolerances. The values d_a, d_b and d_c are listed in the product tables starting on **page 472**. The tolerance class for the bearing shaft seat should be selected from the SKF rolling bearings catalogue.

Table 6

Shaft tolerances

Nominal diameter		Diameter tolerance limits			
		Adapter mounting		Cylindrical mounting	
		d_a		d_b, d_c	
over	incl.	high	low	high	low
in.		in.			
1/2	1	0	−0.002	–	–
1	2	0	−0.003	0	−0.003
2	4	0	−0.004	0	−0.003
4	6	0	−0.005	0	−0.003
6	10	0	−0.006	0	−0.004
10	15	0	−0.006	0	−0.005
15		0	−0.006	0	−0.006

Attachment bolt recommendations

In typical applications, 8.8 class (SAE J429, Grade 5) hexagon head bolts can be used together with washers. If the load does not act perpendicularly toward the base, it may be necessary to use stronger, 10.9 class (SAE J429, Grade 8) bolts.

SKF housings can withstand loads resulting from tightening the attachment bolts to the torque values recommended by bolt manufactures. They are valid for oiled, but otherwise untreated, thread surfaces. SKF cannot guarantee that tightening to the recommended value will provide sufficient anchoring. Make sure that attachment bolts, dowels or stops, and a sufficiently strong support can accommodate all occurring loads.

Lubrication

All SDAF pillow blocks can accommodate grease, oil bath or circulating oil lubrication systems. Any sealing solution can be used with grease lubrication, while for oil lubrication SKF does not recommend using labyrinth rings in the LER series.

The lubricant should be selected based on the operating conditions of the bearing. For additional information about lubricant selection, refer to the information available online at skf.com/bearings.

Initial grease fill

If no other requirements exist, the free space in the bearing should be completely filled with grease and the free space in the housing should be filled 20 to 40% of its volume. A 40% grease fill is required when bearings have to be relubricated from the side, while a 20% grease fill is used when bearings are relubricated via the outer ring.

For highly contaminated environments and slow speeds, fill the housing to 70 to 80%. For additional information, contact the SKF application engineering service.

Quantities for 20 and 40% fills are listed in **tables 7** and **8**. The values are valid for a typical lithium grease (about 0.57 oz/in^3). The grease to fill labyrinth seals or taconite heavy-duty seals is not included.

In most applications, the initial grease fill will adequately lubricate the bearing until the grease is exchanged during the next planned maintenance interval.

Table 7

Initial grease fill for SDAF pillow block housings

Housing Size				Initial fill 20%	40%
–				oz.	
	316		616	7	14
220	317	520	617	7	14
	318		618	9	18
222		522		9	18
224	320	524	620	14	28
226	322	526	622	14	28
228		528		18	36
230	324	530	624	22	44
232	326	532	626	28	57
234	328	534	628	31	62
236	330	536	630	46	93
238	332	538	632	59	119
240	334	540	634	76	152
	336		636	90	180
244	338	544	638	97	194
	340		640	124	248

Table 8

Initial grease fill for SDAF extended range pillow block housings

Housing Size			Initial fill 20%	40%
–			lb.	
	3152	3248	4	8
3060	3156	3252	6	13
3064	3160	3256	6	11
3072	3164		7	14
3076		3260	7	15
	3168	3264	9	18
3080	3172		9	19
3084	3176		7	14
3088	3180	3268	9	19
		3272	11	22
3092		3276	9	19
3096	3184		16	32
	3188		14	28
30/500		3280	15	31
30/530	3192	3284	14	29
	3196	3288	13	27
		3292	19	38
		3296	16	32

Relubrication

All SDAF housings have one drilled and tapped lubrication hole in the centre of the cap (→ **fig. 7**). The hole is plugged on delivery.

All housing bases are equipped with a drain plug on each side to purge or drain old lubricant or to serve as an outlet for circulating oil (→ **fig. 8**). The sump in the housing base is large enough to accommodate a sufficient quantity of lubricant to provide reliable long-term operation.

Relubrication via the outer ring

The hole in the centre of the cap should be used to relubricate spherical roller bearings with a relubrication feature (a lubrication groove and holes in the outer ring) (→ **fig. 9**). When applying grease via the relubrication feature, the shaft should be rotating.

Fig. 7

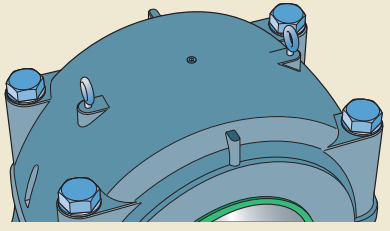

Fig. 8

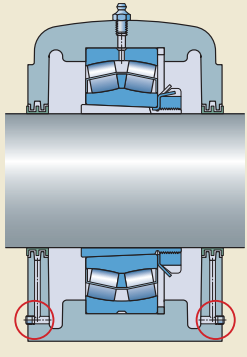

Oil lubrication

Oil bath lubrication

The level of oil should be at about the centre of the lowermost rolling element when the bearing is stationary. For more information about oil levels, contact the SKF application engineering service. For higher speeds, the level should be slightly lower to reduce the effects of lubricant churning – about 1/8 inch above the corner of the outer ring raceway of the bearing.

An oil sight glass should be used to monitor the oil level during operation. It can be mounted into one of the drain holes in the housing base. The static oil level should be marked on the sight glass prior to operation and a running level should be marked after start up. Depending on the type of bearing and the speed and direction of rotation, the running level will either rise or fall from the static level.

Fig. 9

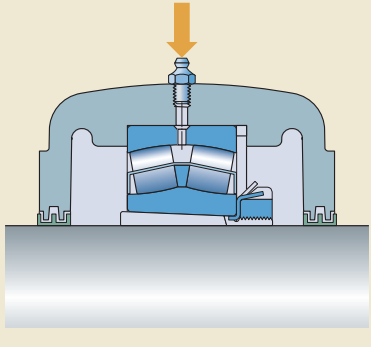

Circulating oil lubrication system

When using a circulating oil lubrication system with any SDAF housing, oil is introduced through the inlet holes in the housing cap and drained from one or both sides of the base.

Drains should lead downward immediately outside of the housing to prevent oil from accumulating in the housing. Too high an oil level can result in higher operating temperatures due to churning of the lubricant. The drain pipes must be adequately sized and arranged to allow oil to drain from the housing. Additional considerations may be necessary when using a circulating oil system. These can include special housing seals, cross drilling the housing sump, wet sump requirements, flow rates, and drain hole dimensions. For more information, contact the SKF application engineering service.

Mounting

All SDAF housings must be mounted properly using the appropriate tools and state of the art mechanical mounting methods. All the associated components must also meet certain basic requirements (→ *Specifications for shafts and housing support surfaces* on **page 45**). Mounting instructions are provided with the housing. For information about mounting rolling bearings, refer to skf.com/mount.

Cap bolt torque specifications

Cap bolts should be tightened to the torque values listed in **tables 4** and **5** on **page 464** and **465**.

Pinning or supporting the housing

Some load conditions may require the housing to be pinned to its support surface or a stop to accommodate loads acting parallel to the housing support surface (→ *Additional housing support*, **page 465**).

Condition monitoring

All SDAF pillow block housings support condition monitoring during operation. They offer space to attach sensors on the cap, side and front faces of the housing for different condition monitoring equipment.

For additional information about condition monitoring and the measurement tools and systems available from SKF, contact the SKF application engineering service.

Ordering information

SDAF pillow blocks are available as complete kits including housing, seals, bearing (and adapter sleeve), locking device and a standard locating ring. A complete pillow block is specified by a designation provided in the product tables for the different series. Optional features can be specified with prefix and suffixes. If several suffixes are required, put them in alphabetical order.

SDAF extended range pillow blocks are typically sold as housing only including labyrinth seals. Complete kits are available that include housing, seals, bearing, adapter assembly or locking device and locating ring.

All pillow block parts can also be supplied as individual components. Order designations for the different parts are listed in the product tables for the different series.

Order example

A shaft with 4 3/16 inch diameter has to be supported by two SDAF pillow (plummer) blocks with 22224 EK spherical roller bearings on adapter sleeves, one at the shaft end for a non-locating bearing position and one for a through shaft at the locating bearing position. The housings should be sealed with PosiTrac Plus seals.

Order:
- 1 pillow block SDAF 22524 TLCY
- 1 pillow block SDAF 22524 TLC

The delivery will contain:
- 2 housings SDAF 524
- 2 spherical roller bearings 22224 EK
- 2 adapter sleeves with lock nuts SNW 24x4.3/16
- 2 locating rings SR 24-20
- 3 labyrinth rings with O-rings LOR 113
- 3 contact elements B-10724-113
- 1 end plug EPR 14

9.1 SDAF pillow blocks with spherical roller bearings on an adapter sleeve
Series SDAF 225(00), 226(00)

d_a **2 15/16 – 7 15/16** in.

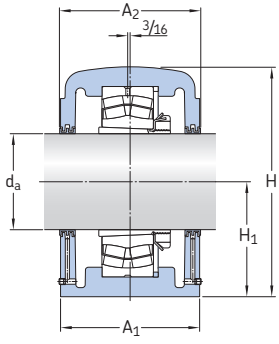

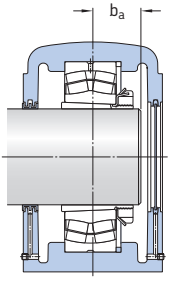

Units of measurement
In this chapter only imperial units are used. To convert imperial units to metric units, refer to the conversion table on **page 10**.

Shaft diameter Standard d_a	Optional[1]	**Complete pillow block**	**Components** Pillow block housing	Bearing[2]	Adapter assembly	Stabilizing ring[3] (1 incl.)	Labyrinth ring (2 incl.)	**Mass**
in.		–	–					lb.
2 15/16	2 13/16, 2 7/8, 3	**SDAF 22617**	SDAF 617	22317 EK	SNW 117	SR 20-17	LER 59	84
3 7/16	3 5/16, 3 3/8, 3 1/2	**SDAF 22520** **SDAF 22620**	SDAF 520 SDAF 620	22220 EK 22320 EK	SNW 20 SNW 120	SR 20-17 SR 24-20	LER 75 LER 75	96 164
3 15/16	3 13/16, 3 7/8, 4	**SDAFS 22522**[4] **SDAF 22622**	SDAFS 522 SDAF 622	22222 EK 22322 EK	SNW 22 SNW 122	SR 22-19 SR 0-22	LER 93 LER 93	105 178
4 3/16	4 1/16, 4 1/8, 4 1/4	**SDAF 22524** **SDAF 22624**	SDAF 524 SDAF 624	22224 EK 22324 CCK/W33	SNW 24 SNW 124	SR 24-20 SR 0-24	LOR 113 LOR 113	125 272
4 7/16	4 5/16, 4 3/8, 4 1/2	**SDAF 22526** **SDAF 22626**	SDAF 526 SDAF 626	22226 EK 22326 CCK/W33	SNW 26 SNW 126	SR 26-0 SR 0-26	LOR 117 LOR 117	199 340
4 15/16	4 13/16, 4 7/8, 5	**SDAFS 22528**[4]	SDAFS 528	22228 CCK/W33	SNW 28	SR 28-0	LOR 122	220
5 3/16	5 1/8, 5 1/4	**SDAF 22530**	SDAF 530	22230 CCK/W33	SNW 30	SR 30-0	LOR 125	259
5 7/16	5 3/8, 5 1/2	**SDAF 22532** **SDAF 22632**	SDAF 532 SDAF 632	22232 CCK/W33 22332 CCK/W33	SNW 32 SNW 132	SR 32-0 SR 38-32	LOR 130 LER 211	330 455
5 15/16	5 13/16, 5 7/8, 6	**SDAF 22634**	SDAF 634	22334 CCK/W33	SNW 134	SR 40-34	LER 215	530
6 7/16	6 5/16, 6 3/8, 6 1/2	**SDAF 22536**	SDAF 536	22236 CCK/W33	SNW 36	SR 36-30	LOR 148	403
6 7/16	6 5/16, 6 3/8, 6 1/2	**SDAF 22636**	SDAF 636	22336 CCK/W33	SNW 136	SR 0-36	LER 220	630
6 15/16	6 13/16, 6 7/8, 7	**SDAF 22538** **SDAF 22638**	SDAF 538 SDAF 638	22238 CCK/W33 22338 CCK/W33	SNW 38 SNW 138	SR 38-32 SR 44-38	LER 224 LER 224	454 792
7 3/16	7 1/8, 7 1/4	**SDAF 22540**	SDAF 540	22240 CCK/W33	SNW 40	SR 40-34	LER 228	544
7 15/16	7 13/16, 7 7/8, 8	**SDAF 22544**	SDAF 544	22244 CCK/W33	SNW 44	SR 44-38	LER 236	795

1) Optional shaft diameters require different adapter sleeve and seals.
2) Optional internal radial clearance (e.g. C3) available on request.
3) For a free unit, discard the enclosed stabilizing ring.
4) Available only in steel.

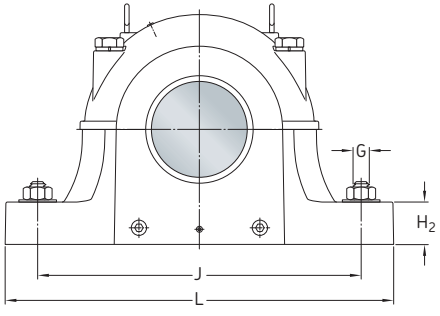

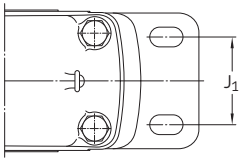

Complete pillow block

Designation	Dimensions										
	A_1	A_2	b_a	H	H_1	H_2	J_{min}	J_{max}	J_1	L	G
–	in.										
SDAF 22617	6	6 3/4	2 1/16	8 15/16	4 1/2	1 7/8	11 5/8	13 1/8	3 3/8	15 1/4	3/4
SDAF 22520	6	6 3/4	1 59/64	8 15/16	4 1/2	1 7/8	11 5/8	13 1/8	3 3/8	15 1/4	3/4
SDAF 22620	6 7/8	7 3/8	2 7/16	10 1/2	5 1/4	2 1/4	13 1/4	14 1/2	4 1/8	16 1/2	7/8
SDAFS 22522	6 3/4	7 1/4	2 1/8	9 7/8	4 15/16	2 1/8	12 5/8	14 1/2	4	16 1/2	7/8
SDAF 22622	7 1/2	8	2 5/8	11 7/8	6	2 3/8	14 5/8	16	4 1/2	18 3/8	1
SDAF 22524	6 7/8	7 3/8	2 9/32	10 1/2	5 1/4	2 1/4	13 1/4	14 1/2	4 1/8	16 1/2	7/8
SDAF 22624	7 7/8	8 3/8	2 13/16	12 9/16	6 5/16	2 1/2	17	18 1/4	4 3/4	21 1/4	1 1/8
SDAF 22526	7 1/2	8	2 15/32	11 7/8	6	2 3/8	14 5/8	16	4 1/2	18 3/8	1
SDAF 22626	8 1/4	8 3/4	3	13 7/16	6 11/16	2 1/2	17 3/8	19 1/4	5	22	1 1/8
SDAFS 22528	7 1/2	7 13/16	–	12 1/16	6	2 3/8	16	17 1/8	4 1/2	20 1/8	1 1/8
SDAF 22530	7 7/8	8 3/8	2 49/64	12 9/16	6 5/16	2 1/2	17	18 1/4	4 3/4	21 1/4	1 1/8
SDAF 22532	8 1/4	8 3/4	2 31/32	13 7/16	6 11/16	2 1/2	17 3/8	19 1/4	5	22	1 1/8
SDAF 22632	10	10 5/8	3 5/8	16	7 7/8	3	21 1/2	23 1/2	6 1/4	27 5/8	1 3/8
SDAF 22634	10 1/2	11 1/8	3 3/4	16 7/8	8 1/4	3 1/4	23	25	6 3/4	28 3/4	1 3/8
SDAF 22536	9 3/8	10	3 9/64	15 3/16	7 1/2	2 3/4	20 7/8	23 5/8	5 7/8	26 3/4	1 1/4
SDAF 22636	10 3/4	11 3/8	3 15/16	17 15/16	8 7/8	3 1/4	24 1/8	26 3/8	6 7/8	30 1/2	1 1/2
SDAF 22538	10	10 5/8	3 19/64	16	7 7/8	3	21 1/2	23 1/2	6 1/4	27 5/8	1 3/8
SDAF 22638	11 1/4	11 7/8	4 1/16	19	9 1/2	3 1/2	25 5/8	27 7/8	7 1/4	32	1 1/2
SDAF 22540	10 1/2	11 1/8	3 1/2	16 7/8	8 1/4	3 1/4	23	25	6 3/4	28 3/4	1 3/8
SDAF 22544	11 1/4	11 7/8	3 5/8	19	9 1/2	3 1/2	25 5/8	27 7/8	7 1/4	32	1 1/2

9.2 SDAF pillow blocks with spherical roller bearings with a cylindrical bore
Series SDAF 222(00), 223(00)
d_a **85 – 220** mm

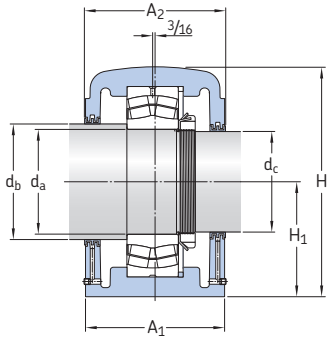

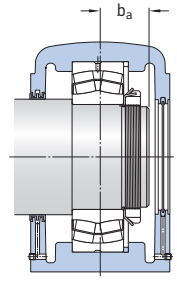

Units of measurement
In this chapter only imperial units are used. To convert imperial units to metric units, refer to the conversion table on **page 10**.

Shaft diameter			Complete pillow block	Components						Mass
				Pillow block housing	Bearing[1]	Stabilizing ring[2] (1 incl.)	Labyrith seal Shaft d_b	Shaft d_c	Lock nut	Lock washer	
d_a	d_b	d_c									
mm	in.		–	–							lb.
85	3 15/16	3 3/16	**SDAF 22317**	SDAF 317	22317 E	SR 20-17	LER 93	LER 69	AN 17	W 17	83
100	4 1/2	3 13/16	**SDAF 22220**	SDAF 220	22220 E	SR 20-17	LER 205	LER 87	AN 20	W 20	80
			SDAF 22320	SDAF 320	22320 E	SR 24-20	LER 205	LER 87	AN 20	W 20	141
110	4 7/8	4 3/16	**SDAFS 22222**[3]	SDAFS 222	22222 E	SR 22-19	LOR 121	LOR 113	AN 22	W 22	102
			SDAF 22322	SDAF 322	22322 E	SR 0-22	LOR 121	LOR 113	AN 22	W 22	172
120	5 5/16	4 9/16	**SDAF 22224**	SDAF 224	22224 E	SR 24-20	LOR 127	LOR 119	AN 24	W 24	118
			SDAF 22324	SDAF 324	22324 CC/W33	SR 0-24	LOR 127	LOR 119	AN 24	W 24	304
130	5 7/8	4 15/16	**SDAF 22226**	SDAF 226	22226 E	SR 26-0	LOR 136	LOR 122	AN 26	W 26	169
			SDAF 22326	SDAF 326	22326 CC/W33	SR 0-26	LOR 136	LOR 122	AN 26	W 26	330
140	6 1/4	5 5/16	**SDAFS 22228**[3]	SDAFS 228	22228 CC/W33	SR 28-0	LOR 144	LOR 127	AN 28	W 28	175
			SDAF 22328	SDAF 328	22328 CC/W33	SR 0 28	LOR 144	LOR 127	AN 28	W 28	331
150	6 5/8	5 3/4	**SDAF 22230**	SDAF 230	22230 CC/W33	SR 30-0	LOR 151	LOR 134	AN 30	W 30	200
			SDAF 22330	SDAF 330	22330 CC/W33	SR 36-30	LOR 151	LOR 134	AN 30	W 30	466
160	7	6 1/16	**SDAF 22232**	SDAF 232	22232 CC/W33	SR 32-0	LOR 156	LOR 142	AN 32	W 32	264
			SDAF 22332	SDAF 332	22332 CC/W33	SR 38-32	LER 225	LER 217	AN 32	W 32	537
170	7 7/16	6 7/16	**SDAF 22334**	SDAF 334	22334 CC/W33	SR 40-34	LER 230	LER 220	AN 34	W 34	554
180	7 13/16	6 7/8	**SDAF 22236**	SDAF 236	22236 CC/W33	SR 36-30	LOR 165	LOR 154	AN 36	W 36	436
			SDAF 22336	SDAF 336	22336 CC/W33	SR 0-36	LER 234	LER 223	AN 36	W 36	623
190	8 3/8	7 1/4	**SDAF 22238**	SDAF 238	22238 CC/W33	SR 38-32	LER 240	LER 229	AN 38	W 38	510
			SDAF 22338	SDAF 338	22338 CC/W33	SR 44-38	LER 240	LER 229	AN 38	W 38	734
200	8 3/4	7 5/8	**SDAF 22240**	SDAF 240	22240 CC/W33	SR 40-34	LER 244	LER 233	AN 40	W 40	389
220	9 9/16	8 5/16	**SDAF 22244**	SDAF 244	22244 CC/W33	SR 44-38	LER 248	LER 239	N 44	W 44	787

[1] Optional internal radial clearance (e.g. C3) available on request.
[2] For a free unit, discard the enclosed stabilizing ring.
[3] Available only in steel.

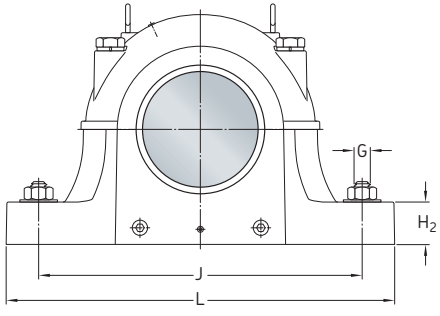

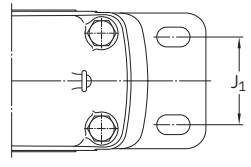

Complete pillow block

Designation	Dimensions										
	A_1	A_2	b_a	H	H_1	H_2	J_{min}	J_{max}	J_1	L	G
–	in.										
SDAF 22317	6	6 3/4	2 1/16	8 15/16	4 1/2	1 7/8	11 5/8	13 1/8	3 3/8	15 1/4	3/4
SDAF 22220	6	6 3/4	1 59/64	8 15/16	4 1/2	1 7/8	11 5/8	13 1/8	3 3/8	15 1/4	3/4
SDAF 22320	6 7/8	7 3/8	2 7/16	10 1/2	5 1/4	2 1/4	13 1/4	14 1/2	4 1/8	16 1/2	7/8
SDAFS 22222	6 3/4	7 1/4	2 1/8	9 7/8	4 15/16	2 1/8	12 5/8	14 1/2	4	16 1/2	7/8
SDAF 22322	7 1/2	8	2 5/8	11 7/8	6	2 3/8	14 5/8	16	4 1/2	18 3/8	1
SDAF 22224	6 7/8	7 3/8	2 9/32	10 1/2	5 1/4	2 1/4	13 1/4	14 1/2	4 1/8	16 1/2	7/8
SDAF 22324	7 7/8	8 3/8	2 13/16	12 9/16	6 5/16	2 1/2	17	18 1/4	4 3/4	21 1/4	1 1/8
SDAF 22226	7 1/2	8	2 15/32	11 7/8	6	2 3/8	14 5/8	16	4 1/2	18 3/8	1
SDAF 22326	8 1/4	8 3/4	3	13 7/16	6 11/16	2 1/2	17 3/8	19 1/4	5	22	1 1/8
SDAFS 22228	7 1/2	7 3/16	–	12 1/16	6	2 3/8	16	17 1/8	4 1/2	20 1/8	1
SDAF 22328	9	9 3/8	3 1/4	14 1/4	7 1/16	2 1/2	19 3/8	21 5/8	5 1/2	24 3/4	1 1/4
SDAF 22230	7 7/8	8 3/8	2 49/64	12 9/16	6 5/16	2 1/2	17	18 1/4	4 3/4	21 1/4	1 1/8
SDAF 22330	9 3/8	9 3/4	3 7/16	15 3/16	7 1/2	2 3/4	20 7/8	23 5/8	5 7/8	26 3/4	1 1/4
SDAF 22232	8 1/4	8 3/4	2 31/32	13 7/16	6 11/16	2 1/2	17 3/8	19 1/4	5	22	1 1/8
SDAF 22332	10	10 5/8	3 5/8	16	7 7/8	3	21 1/2	23 1/2	6 1/4	27 5/8	1 3/8
SDAF 22334	10 1/2	11 1/8	3 3/4	16 7/8	8 1/4	3 1/4	23	25	6 3/4	28 3/4	1 3/8
SDAF 22236	9 3/8	10	3 9/64	15 3/16	7 1/2	2 3/4	20 7/8	23 5/8	5 7/8	26 3/4	1 1/4
SDAF 22336	10 3/4	11 3/8	3 7/8	17 15/16	8 7/8	3 1/4	24 1/8	26 3/8	6 7/8	30 1/2	1 1/2
SDAF 22238	10	10 5/8	3 19/64	16	7 7/8	3	21 1/2	23 1/2	6 1/4	27 5/8	1 3/8
SDAF 22338	11 1/4	11 7/8	4 1/16	19	9 1/2	3 1/2	25 5/8	27 7/8	7 1/4	32	1 1/2
SDAF 22240	10 1/2	11 1/8	3 1/2	16 7/8	8 1/4	3 1/4	23	25	6 3/4	28 3/4	1 3/8
SDAF 22244	11 1/4	11 7/8	3 5/8	19	9 1/2	3 1/2	25 5/8	27 7/8	7 1/4	32	1 1/2

9.3 Extended range pillow blocks with spherical roller bearings on an adapter sleeve
Series SDAF 230(00) KA, 231(00) KA, 232(00) KA

d_a **8 15/16 – 14 15/16** in.

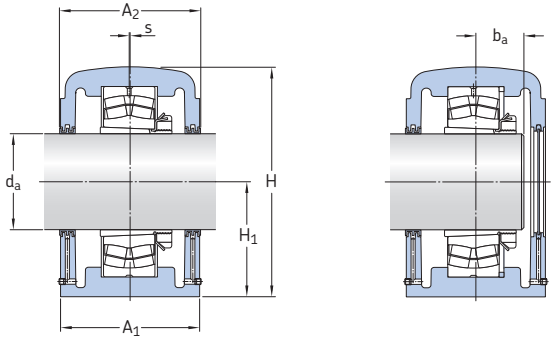

Units of measurement
In this chapter only imperial units are used. To convert imperial units to metric units, refer to the conversion table on **page 10**.

Shaft diameter Stand-ard d_a	Op-tional[1]	**Complete pillow block**	**Components** Pillow block housing	Bearing[2]	Adapter assembly	Stabilizing ring[3] (2 req'd)	Laby-rinth ring (2 incl.)
in.		–	–				
8 15/16	9	**SDAF 23248 KA x 8 15/16**	SDAF 3248 KA x 8 15/16	23248 CACK/W33	SNP 148 x 8 15/16	36053-114	ERF 914
9 7/16	9 1/2	**SDAF 23152 KA x 9 7/16**	SDAF 3152 KA x 9 7/16	23152 CACK/W33	SNP 3152 x 9 7/16	36053-114	ERF 891
		SDAF 23252 KA x 9 7/16	SDAF 3252 KA x 9 7/16	23252 CACK/W33	SNP 152 x 9 7/16	A 8968	ERF 891
10 7/16	10 1/2	**SDAF 23156 KA x 10 7/16**	SDAF 3156 KA x 10 7/16	23156 CACK/W33	SNP 3156 x 10 7/16	A 8967	ERF 973
		SDAF 23256 KA x 10 7/16	SDAF 3256 KA x 10 7/16	23256 CACK/W33	SNP 3256 x 10 7/16	36053-157	ERF 973
10 15/16	11	**SDAF 23060 KA x 10 15/16**	SDAF 3060 KA x 10 15/16	23060 CACK/W33	SNP 3060 x 10 15/16	A 8967[4]	ERF 858
		SDAF 23160 KA x 10 15/16	SDAF 3160 KA x 10 15/16	23160 CACK/W33	SNP 3160 x 10 15/16	36053-157	ERF 858
10 15/16	11	**SDAF 23260 KA x 10 15/16**	SDAF 3260 KA x 10 15/16	23260 CACK/W33	SNP 3260 x 10 15/16	36053-130	ERF 1002
11 7/16	11 1/2	**SDAF 23064 KA x 11 7/16**	SDAF 3064 KA x 11 7/16	23064 CCK/W33	SNP 3064 x 11 7/16	A 8968[4]	ERF 861
11 15/16	12	**SDAF 23064 KA x 11 15/16**	SDAF 3064 KA x 11 15/16	23064 CCK/W33	SNP 3064 x 11 15/16	A 8968[4]	ERF 859
		SDAF 23164 KA x 11 15/16	SDAF 3164 KA x 11 15/16	23164 CACK/W33	SNP 3164 x 11 15/16	A 8970	ERF 900
		SDAF 23264 KA x 11 15/16	SDAF 3264 KA x 11 15/16	23264 CACK/W33	SNP 3264 x 11 15/16	36053-137	ERF 900
12 7/16	12 1/2	**SDAF 23068 KA x 12 7/16**	SDAF 3068 KA x 12 7/16	23068 CACK/W33	SNP 3068 x 12 7/16	A 8969[4]	ERF 865
		SDAF 23168 KA x 12 7/16	SDAF 3168 KA x 12 7/16	23168 CACK/W33	SNP 3168 x 12 7/16	36053-137	ERF 975
		SDAF 23268 KA x 12 7/16	SDAF 3268 KA x 12 7/16	23268 CAK/W33	SNP 3268 x 12 7/16	36053-143	ERF 975
12 15/16	13	**SDAF 23072 KA x 12 15/16**	SDAF 3072 KA x 12 15/16	23072 CACK/W33	SNP 3072 x 12 15/16	A 8970[4]	ERF 869
13 7/16	13 1/2	**SDAF 23072 KA x 13 7/16**	SDAF 3072 KA x 13 7/16	23072 CACK/W33	SNP 3072 x 13 7/16	A 8970[4]	ERF 872
		SDAF 23172 KA x 13 7/16	SDAF 3172 KA x 13 7/16	23172 CCK/W33	SNP 3172 x 13 7/16	36053-167	ERF 872
		SDAF 23272 KA x 13 7/16	SDAF 3272 KA x 13 7/16	23272 CAK/W33	SNP 3272 x 13 7/16	36053-150	ERF 979
13 15/16	14	**SDAF 23076 KA x 13 15/16**	SDAF 3076 KA x 13 15/16	23076 CACK/W33	SNP 3076 x 13 15/16	A 8971[4]	ERF 875
		SDAF 23176 KA x 13 15/16	SDAF 3176 KA x 13 15/16	23176 CAK/W33	SNP 3176 x 13 15/16	36053-143	ERF 875
		SDAF 23276 KA x 13 15/16	SDAF 3276 KA x 13 15/16	23276 CAK/W33	SNP 3276 x 13 15/16	36053-152	ERF 977
14 15/16	15	**SDAF 23180 KA x 14 15/16**	SDAF 3180 KA x 14 15/16	23180 CAK/W33	SNP 3180 x 14 15/16	36053-150	ERF 882
		SDAF 23280 KA x 15	SDAF 3280 KA x 15	23280 CAK/W33	SNP 3280 x 15	36053-165	ERF 976

[1] Requires different adapter sleeve and seals.
[2] Optional internal radial clearance (e.g. C3) available on request.
[3] For a held unit, order stabilizing rings separately.
[4] Only one stabilizing ring required.

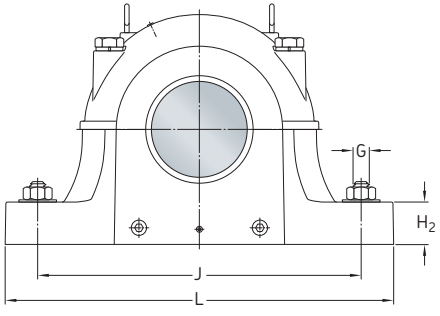

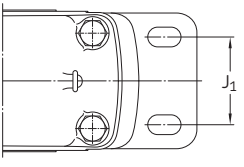

Complete pillow block Designation	Dimensions												Mass
	A_1	A_2	S	b_a	H	H_1	H_2	J_{min}	J_{max}	J_1	L	G	
–	in.												lb.
SDAF 23248 KA x 8 15/16	13 1/8	13 3/4	0	4 7/8	20 7/8	10 1/4	3 3/4	29	30 1/2	8 3/4	35	1 5/8	1 100
SDAF 23152 KA x 9 7/16	13 1/8	13 3/4	0	4 5/8	20 7/8	10 1/4	3 3/4	29	30 1/2	8 3/4	35	1 5/8	1 050
SDAF 23252 KA x 9 7/16	14 3/4	15 1/2	0	5 7/32	23 7/16	12	4	32 3/4	33 1/2		38 1/4	1 5/8	1 350
SDAF 23156 KA x 10 7/16	14 3/4	15 1/2	0	4 25/32	23 7/16	12	4	32 3/4	33 1/2	9	38 1/4	1 5/8	1 250
SDAF 23256 KA x 10 7/16	14 3/4	15 1/2	0	5 11/32	23 7/16	12	4	32 3/4	33 1/2		38 1/4	1 5/8	1 400
SDAF 23060 KA x 10 15/16	14 3/4	15 1/2	3/16	4 11/32	23 7/16	12	3 3/8	32 3/4	33 1/2	9	38 1/4	1 5/8	1 200
SDAF 23160 KA x 10 15/16	14 3/4	15 1/2	0	5 1/8	23 7/16	12	4	32 3/4	33 1/2	9	38 1/4	1 5/8	1 350
SDAF 23260 KA x 10 15/16	15 3/4	16 3/4	0	5 3/4	25 3/4	12 13/16	4 1/2	35	36 1/2	10 1/2	41 3/4	1 7/8	1 900
SDAF 23064 KA x 11 7/16	14 3/4	15 1/2	3/16	4 1/2	23 7/16	12	3 3/8	32 3/4	33 1/2	9	38 1/4	1 5/8	1 300
SDAF 23064 KA x 11 15/16	14 3/4	15 1/2	3/16	4 1/2	23 7/16	12	3 3/8	32 3/4	33 1/2	9	38 1/4	1 5/8	1 250
SDAF 23164 KA x 11 15/16	15 3/4	16 3/4	0	5 17/32	25 3/4	12 13/16	4 1/2	35	36 1/2	10 1/2	41 3/4	1 7/8	1 850
SDAF 23264 KA x 11 15/16	17 3/4	18 3/4	0	6 5/32	27 7/8	14	5	36 3/4	38 1/4	10 3/4	43 3/4	2	2 500
SDAF 23068 KA x 12 7/16	15 1/4	15 3/4	3/16	4 7/8	24	11 13/16	4 3/16	32	33 1/2	10	39	1 7/8	1 550
SDAF 23168 KA x 12 7/16	17 3/4	18 3/4	0	5 29/32	27 7/8	14	5	36 3/4	38 1/4	10 3/4	43 3/4	2	2 450
SDAF 23268 KA x 12 7/16	17 1/8	17 5/8	0	6 19/32	28 7/8	14 1/2	5 1/4	39 1/4	40 3/4	11	46	2	2 650
SDAF 23072 KA x 12 15/16	15 3/4	16 3/4	3/16	4 7/8	25 3/4	12 13/16	4 1/2	35	36 1/2	10 1/2	41 3/4	1 7/8	1 650
SDAF 23072 KA x 13 7/16	15 3/4	16 3/4	3/16	4 7/8	25 3/4	12 13/16	4 1/2	35	36 1/2	10 1/2	41 3/4	1 7/8	1 600
SDAF 23172 KA x 13 7/16	17 1/8	17 5/8	0	5 31/32	28 7/8	14 1/2	5 1/4	39 1/4	40 3/4	11	46	2	2 500
SDAF 23272 KA x 13 7/16	18 3/4	19 1/4	0	6 3/4	30 1/2	15 1/2	5 1/2	41 3/4	43 1/2	12 1/4	48 3/4	2 1/4	2 950
SDAF 23076 KA x 13 15/16	15 3/4	16 3/4	3/16	5 1/8	25 3/4	12 13/16	4 1/2	35	36 1/2	10 1/2	41 3/4	1 7/8	1 700
SDAF 23176 KA x 13 15/16	17 1/8	17 5/8	0	6 1/8	28 7/8	14 1/2	5 1/4	39 1/4	40 3/4	11	46	2	2 500
SDAF 23276 KA x 13 15/16	18 3/4	19 1/4	0	7 1/32	30 1/2	15 1/2	5 1/2	41 3/4	43 1/2	12 1/4	48 3/4	2 1/4	3 050
SDAF 23180 KA x 15	18 3/4	19 1/4	0	6 13/32	30 1/2	15 1/2	5 1/2	41 3/4	43 1/2	12 1/4	48 3/4	2 1/4	2 800
SDAF 23280 KA x 15	21	21 3/4	0	7 1/2	33 3/4	17	5 1/2	44 3/8	46 1/8	14 1/2	52	2 1/4	4 500

9.3 Extended range pillow blocks with spherical roller bearings on an adapter sleeve
Series SDAF 230(00) KA, 231(00) KA, 232(00) KA
d_a **15 – 19 1/2** in.

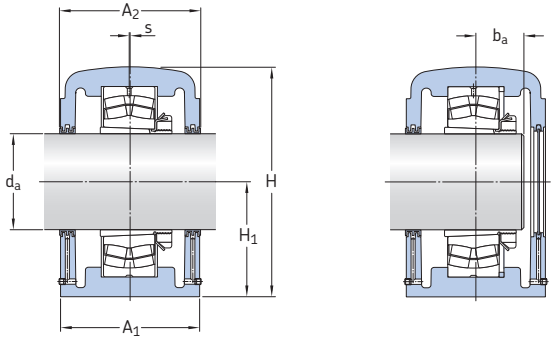

Units of measurement
In this chapter only imperial units are used. To convert imperial units to metric units, refer to the conversion table on **page 10**.

Shaft diameter Stand-ard d_a	Op-tional[1]	**Complete pillow block**	**Components** Pillow block housing	Bearing[2]	Adapter assembly	Stabilizing ring[3] (2 req'd)	Laby-rinth ring (2 incl.)
in.		–	–				
15	14 15/16	**SDAF 23080 KA x 15**	SDAF 3080 KA x 15	23080 CACK/W33	SNP 3080 x 15	36053-153[4]	ERF 847
15 3/4	–[5]	**SDAF 23084 KA x 15 3/4**	SDAF 3084 KA x 15 3/4	23084 CAK/W33	SNP 3084 x 15 3/4	36053-143[4]	ERF 969
		SDAF 23184 KA x 15 3/4	SDAF 3184 KA x 15 3/4	23184 CAK/W33	SNP 3184 x 15 3/4	36053-160	ERF 907
		SDAF 23284 KA x 15 3/4	SDAF 3284 KA x 15 3/4	23284 CAK/W33	SNP 3284 x 15 3/4	36053-154	ERF 907
16 1/2	–[5]	**SDAF 23088 KA x 16 1/2**	SDAF 3088 KA x 16 1/2	23088 CAK/W33	SNP 3088 x 16 1/2	36053-150[4]	ERF 958
		SDAF 23188 KA x 16 1/2	SDAF 3188 KA x 16 1/2	23188 CAK/W33	SNP 3188 x 16 1/2	36053-165	ERF 958
		SDAF 23288 KA x 16 1/2	SDAF 3288 KA x 16 1/2	23288 CAK/W33	SNP 3288 x 16 1/2	36053-159	ERF 958
17	–[5]	**SDAF 23092 KA x 17**	SDAF 3092 KA x 17	23092 CAK/W33	SNP 3092 x 17	36053-152[4]	ERF 838
		SDAF 23192 KA x 17	SDAF 3192 KA x 17	23192 CAK/W33	SNP 3192 x 17	36053-154	ERF 838
18	–[5]	**SDAF 23096 KA x 18**	SDAF 3096 KA x 18	23096 CAK/W33	SNP 3096 x 18	36053-200[4]	ERF 888
		SDAF 23196 KA x 18	SDAF 3196 KA x 18	23196 CAK/W33	SNP 3196 x 18	36053-159	ERF 888
18 1/2	–[5]	**SDAF 230/500 KA x 18 1/2**	SDAF 30/500 KA x 18 1/2	230/500 CAK/W33	SNP 30/500 x 18 1/2	36053-165[4]	ERF 978
19 1/2	–[5]	**SDAF 230/530 KA x 19 1/2**	SDAF 30/530 KA x 19 1/2	230/530 CAK/W33	SNP 30/530 x 19 1/2	36053-166[4]	ERF 926

[1] Requires different adapter sleeve and seals.
[2] Optional internal radial clearance (e.g. C3) available on request.
[3] For a held unit, order stabilizing rings separately.
[4] Only one stabilizing ring required.
[5] Optional shaft sizes available on request.

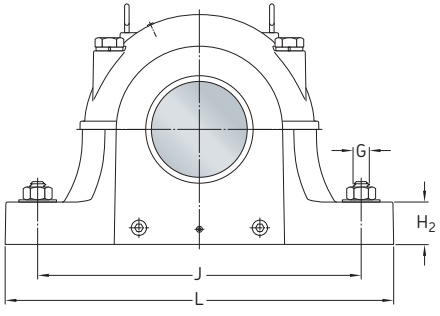

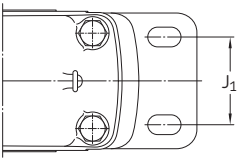

Complete pillow block

Designation	Dimensions												Mass
	A_1	A_2	S	b_a	H	H_1	H_2	J_{min}	J_{max}	J_1	L	G	
–	in.												lb.
SDAF 23080 KA x 15	17 1/8	17 5/8	3/16	5 17/32	29	14 1/2	5 1/4	39 1/4	40 3/4	11	46	2	2 300
SDAF 23084 KA x 15 3/4	17 1/8	17 5/8	3/16	5 9/16	29	14 1/2	5 1/4	39 1/4	40 3/4	11	46	2	2 300
SDAF 23184 KA x 15 3/4	21	21 3/4	0	6 7/8	33 3/4	17	5 1/2	44 3/8	46 1/8	14 1/2	53	2 1/4	4 300
SDAF 23284 KA x 15 3/4	21 5/8	22 1/4	0	7 13/16	35 3/4	18	5 3/4	47 1/8	48 7/8	15	54 1/4	2 1/2	5 000
SDAF 23088 KA x 16 1/2	18 3/4	19 1/4	3/16	5 3/4	30 1/2	15 1/2	5 1/2	41 3/4	43 1/2	12 1/4	48 3/4	2 1/4	2 550
SDAF 23188 KA x 16 1/2	21	21 3/4	0	7 7/32	33 3/4	17	5 1/2	44 3/8	46 1/8	14 1/2	53	2 1/4	4 300
SDAF 23288 KA x 16 1/2	21 5/8	22 1/4	0	8 9/32	35 3/4	18	5 3/4	47 1/8	48 7/8	15	54 1/4	2 1/2	5 050
SDAF 23092 KA x 17	18 3/4	19 1/4	3/16	5 7/8	30 1/2	15 1/2	5 1/2	41 3/4	43 1/2	12 1/4	48 3/4	2 1/4	2 850
SDAF 23192 KA x 17	21 5/8	22 1/4	0	7 1/2	35 3/4	18	5 3/4	47 1/8	48 7/8	15	54 1/4	2 1/2	5 000
SDAF 23096 KA x 18	21	21 3/4	3/16	5 29/32	33 3/4	17	5 1/2	44 3/8	46 1/8	14 1/2	53	2 1/4	4 250
SDAF 23196 KA x 18	21 5/8	22 1/4	0	7 21/32	35 3/4	18	5 3/4	47 1/8	48 7/8	15	54 1/4	2 1/2	5 300
SDAF 230/500 KA x 18 1/2	21	21 3/4	3/16	6 1/2	33 3/4	17	5 1/2	44 3/8	46 1/8	14 1/2	53	2 1/4	4 350
SDAF 230/530 KA x 19 1/2	21 5/8	22 1/4	3/16	6 27/32	35 3/4	18	5 3/4	47 1/8	48 7/8	15	54 1/4	2 1/2	5 200

9.4 Extended range pillow blocks with spherical roller bearings with a cylindrical bore Series SDAF 230(00), 231(00), 232(00)

d_a **240 – 420** mm

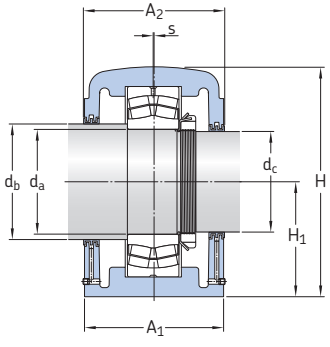

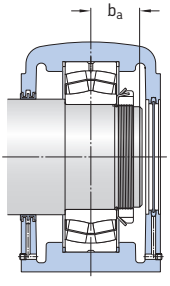

Units of measurement
In this chapter only imperial units are used. To convert imperial units to metric units, refer to the conversion table on **page 10**.

Shaft diameter			Complete pillow block	Components							Mass
				Pillow block housing	Bearing[1]	Stabilizing ring[2] (2 req'd)	Labyrinth seal Shaft d_b	Shaft d_c	Lock nut	Lock washer	
d_a	d_b	d_c									
mm	in.		–	–							lb.
240	10 1/2	9 3/16	**SDAF 23248**	SDAF 3248	23248 CAC/W33	36053-114	ERF 840	ERF 923	N 048	PL 48	1 100
260	11 1/2	9 15/16	**SDAF 23152**	SDAF 3152	23152 CAC/W33	36053-114	ERF 832	ERF 845	N 052	PL 52	1 050
	11 1/2	9 15/16	**SDAF 23252**	SDAF 3252	23252 CAC/W33	A 8968	ERF 832	ERF 845	N 052	PL 52	1 350
280	12 1/2	10 3/4	**SDAF 23156**	SDAF 3156	23156 CAC/W33	A 8967	ERF 866	ERF 826	N 056	PL 56	1 250
	12 1/2	10 3/4	**SDAF 23256**	SDAF 3256	23256 CAC/W33	36053-157	ERF 866	ERF 826	N 056	PL 56	1 400
300	13	11 1/2	**SDAF 23060**	SDAF 3060	23060 CAC/W33	A 8967[3]	ERF 824	ERF 832	N 060	PL 60	1 200
	13	11 1/2	**SDAF 23160**	SDAF 3160	23160 CAC/W33	36053-157	ERF 846	ERF 856	N 060	PL 60	1 350
	13	11 1/2	**SDAF 23260**	SDAF 3260	23260 CAC/W33	36053-130	ERF 846	ERF 856	N 060	PL 60	1 900
320	13 3/4	12 1/4	**SDAF 23064**	SDAF 3064	23064 CC/W33	A 8968[3]	ERF 943	ERF 804	N 064	PL 64	1 300
	14	12 1/4	**SDAF 23164**	SDAF 3164	23164 CAC/W33	A 8970	ERF 876	ERF 983	N 064	PL 64	1 850
	14	12 1/4	**SDAF 23264**	SDAF 3264	23264 CAC/W33	36053-137	ERF 876	ERF 983	N 064	PL 64	2 500
340	15	13	**SDAF 23068**	SDAF 3068	23068 CAC/W33	A 8969[3]	ERF 806	ERF 824	N 068	PL 68	1 550
	15	13	**SDAF 23168**	SDAF 3168	23168 CAC/W33	36053-137	ERF 847	ERF 846	N 068	PL 68	2 450
	15	13	**SDAF 23268**	SDAF 3268	23268 CA/W33	36053-143	ERF 847	ERF 846	N 068	PL 68	2 650
360	15 3/4	13 3/4	**SDAF 23072**	SDAF 3072	23072 CAC/W33	A 8970[3]	ERF 969	ERF 874	N 072	PL 72	1 650
	16	13 3/4	**SDAF 23172**	SDAF 3172	23172 CC/W33	36053-167	ERF 809	ERF 874	N 072	PL 72	2 500
	16	13 3/4	**SDAF 23272**	SDAF 3272	23272 CA/W33	36053-150	ERF 965	ERF 981	N 072	PL 72	2 950
380	16 3/4	14 1/2	**SDAF 23076**	SDAF 3076	23076 CAC/W33	A 8971[3]	ERF 822	ERF 950	N 076	PL 76	1 700
	17	14 1/2	**SDAF 23176**	SDAF 3176	23176 CA/W33	36053-143	ERF 811	ERF 950	N 076	PL 76	2 500
	17	14 1/2	**SDAF 23276**	SDAF 3276	23276 CA/W33	36053-152	ERF 838	ERF 984	N 076	PL 76	3 050
400	17 1/2	15 3/8	**SDAF 23080**	SDAF 3080	23080 CAC/W33	36053-153[3]	ERF 999	ERF 942	N 080	PL 80	2 300
	17 1/2	15 1/4	**SDAF 23180**	SDAF 3180	23180 CA/W33	36053-150	ERF 967	ERF 895	N 080	PL 80	2 800
	17 1/2	15 1/4	**SDAF 23280**	SDAF 3280	23280 CA/W33	36053-165	ERF 967	ERF 895	N 080	PL 80	4 500
420	18	16	**SDAF 23084**	SDAF 3084	23084 CA/W33	36053-143[3]	ERF 812	ERF 809	N 084	PL 84	2 300
	18 1/2	15 3/4	**SDAF 23184**	SDAF 3184	23184 CA/W33	36053-160	ERF 978	ERF 907	N 084	PL 84	4 300
	18 1/2	15 3/4	**SDAF 23284**	SDAF 3284	23284 CA/W33	36053-154	ERF 978	ERF 907	N 084	PL 84	5 000

[1] Optional internal radial clearance (e.g. C3) available on request.
[2] For a held unit, order stabilizing rings separately.
[3] Only one stabilizing ring required.

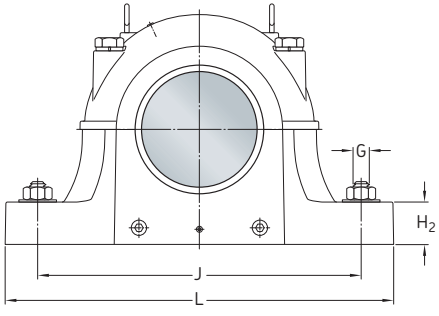

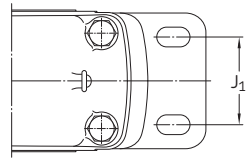

Complete pillow block

Designation	Dimensions											
	A_1	A_2	S	b_a	H	H_1	H_2	J_{min}	J_{max}	J_1	L	G
–	in.											
SDAF 23248	13 1/8	13 3/4		4 7/8	20 7/8	10 1/4	3 3/4	29	30 1/2	8 3/4	35	1 5/8
SDAF 23152	13 1/8	13 3/4		4 5/8	20 7/8	10 1/4	3 3/4	29	30 1/2	8 3/4	35	1 5/8
SDAF 23252	14 3/4	15 1/2		5 7/32	23 7/16	12	4	32 3/4	33 1/2	9	38 1/4	1 5/8
SDAF 23156	14 3/4	15 1/2		4 25/32	23 7/16	12	4	32 3/4	33 1/2	9	38 1/4	1 5/8
SDAF 23256	14 3/4	15 1/2		5 11/32	23 7/16	12	4	32 3/4	33 1/2	9	38 1/4	1 5/8
SDAF 23060	14 3/4	15 1/2	3/16	4 11/32	23 7/16	12	4	32 3/4	33 1/2		38 1/4	1 5/8
SDAF 23160	14 3/4	15 1/2		5 1/8	23 7/16	12	4	32 3/4	33 1/2	9	38 1/4	1 5/8
SDAF 23260	15 3/4	16 3/4		5 3/4	25 3/4	12 13/16		35	36 1/2	10 1/2	41 3/4	1 7/8
SDAF 23064	14 3/4	15 1/2	3/16	4 1/2	23 7/16	12	4	32 3/4	33 1/2		38 1/4	1 5/8
SDAF 23164	15 3/4	16 3/4		5 17/32	25 3/4	12 13/16	4 1/2	35	36 1/2	10 1/2	41 3/4	1 7/8
SDAF 23264	17 3/4	18 3/4		6 5/32	27 7/8	14	5	36 3/4	38 1/4	10 3/4	43 3/4	2
SDAF 23068	15 1/4	15 3/4	3/16	4 7/8	24	12	4 3/16	32	33 1/2	10	39	1 7/8
SDAF 23168	17 3/4	18 3/4		5 29/32	27 7/8	14	5	36 3/4	38 1/4	10 3/4	43 3/4	2
SDAF 23268	17 1/8	17 5/8		6 19/32	28 7/8	14 1/2	5 1/4	39 1/4	40 3/4	11	46	2
SDAF 23072	15 3/4	16 3/4	3/16	4 7/8	25 3/4	12 13/16	4 1/2	35	36 1/2	10 1/2	41 3/4	1 7/8
SDAF 23172	17 1/8	17 5/8		5 31/32	28 7/8	14 1/2	5 1/4	39 1/4	40 3/4	11	46	2
SDAF 23272	18 3/4	19 1/4		6 3/4	30 1/2	15 1/2	5 1/2	41 3/4	43 1/2	12 1/4	48 3/4	2 1/4
SDAF 23076	15 3/4	16 3/4	3/16	5 1/8	25 3/4	12 13/16	4 1/2	35	36 1/2	10 1/2	41 3/4	1 7/8
SDAF 23176	17 1/8	17 5/8		6 1/8	28 7/8	14 1/2	5 1/4	39 1/4	40 3/4	11	46	2
SDAF 23276	18 3/4	19 1/4		7 1/32	30 1/2	15 1/2	5 1/2	41 3/4	43 1/2	12 1/4	48 3/4	2 1/4
SDAF 23080	17 1/8	17 5/8	3/16	5 17/32	28 7/8	14 1/2	5 1/4	39 1/4	40 3/4	11	46	2
SDAF 23180	18 3/4	19 1/4		6 13/32	30 1/2	15 1/2	5 1/2	41 3/4	43 1/2	12 1/4	48 3/4	2 1/4
SDAF 23280	21	21 3/4		7 1/2	33 3/4	17	5 1/2	44 3/8	46 1/8	14 1/2	53	2 1/4
SDAF 23084	17 1/8	17 5/8	3/16	5 9/16	29	14 1/2	5 1/4	39 1/4	40 3/4	11	46	2
SDAF 23184	21	21 3/4		6 7/8	33 3/4	17	5 1/2	44 3/8	46 1/8	14 1/2	53	2 1/4
SDAF 23284	21 5/8	22 1/4		7 13/16	35 3/4	18	5 3/4	47 1/8	48 7/8	15	54 1/4	2 1/2

9.4 Extended range pillow blocks with spherical roller bearings with a cylindrical bore Series SDAF 230(00), 231(00), 232(00)

d_a **440 – 530** mm

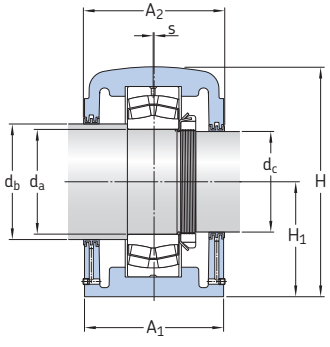

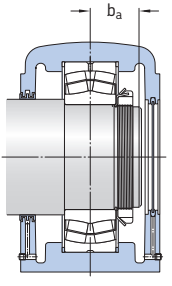

Units of measurement
In this chapter only imperial units are used. To convert imperial units to metric units, refer to the conversion table on **page 10**.

Shaft diameter			Complete pillow block	Components						Mass
				Pillow block housing	Bearing[1]	Stabilizing ring[2] (2 req'd)	Labyrinth seal Shaft d_b	Shaft d_c	Lock nut	Lock washer	
d_a	d_b	d_c									
mm	in.		–	–							lb.
440	19 1/2	17	**SDAF 23088**	SDAF 3088	23088 CA/W33	36053-150	ERF 926	ERF 838	N 088	PL 88	2 550
	19 1/2	17	**SDAF 23188**	SDAF 3188	23188 CA/W33	36053-165	ERF 926	ERF 838	N 088	PL 88	4 300
	19 1/2	17	**SDAF 23288**	SDAF 3288	23288 CA/W33	36053-159	ERF 926	ERF 838	N 088	PL 88	5 050
460	20	17 3/4	**SDAF 23092**	SDAF 3092	23092 CA/W33	36053-152	ERF 808	ERF 906	N 092	PL 92	2 850
	20	17 3/4	**SDAF 23192**	SDAF 3192	23192 CA/W33	36053-154	ERF 808	ERF 906	N 092	PL 92	5 000
480	21	18 1/2	**SDAF 23096**	SDAF 3096	23096 CA/W33	36053-200	ERF 933	ERF 978	N 096	PL 96	4 250
	21	18 1/2	**SDAF 23196**	SDAF 3196	23196 CA/W33	36053-159	ERF 933	ERF 978	N 096	PL 96	5 300
500	21	19	**SDAF 230/500**	SDAF 30/500	230/500 CA/W33	36053-165	ERF 933	ERF 922	N 500	PL 500	4 350
530	22 1/2	20 3/8	**SDAF 230/530**	SDAF 30/530	230/530 CA/W33	36053-166	ERF 997	ERF 998	N 530	PL 530	5 200

1) Optional internal radial clearance (e.g. C3) available on request.
2) For a held unit, order stabilizing rings separately.

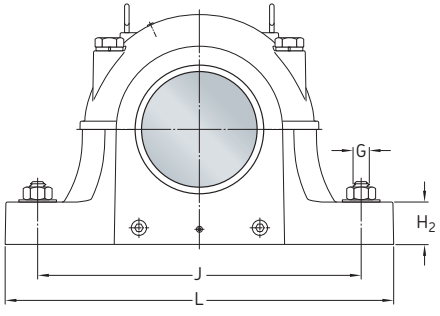

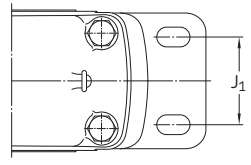

Complete pillow block

Designation	Dimensions											
	A_1	A_2	S	b_a	H	H_1	H_2	J_{min}	J_{max}	J_1	L	G
–	in.											
SDAF 23088	18 3/4	19 1/4		5 3/4	30 1/2	15 1/2	5 1/2	41 3/4	43 1/2	12 1/4	48 3/4	2 1/4
SDAF 23188	21	21 3/4		7 7/32	33 3/4	17	5 1/2	44 3/8	46 1/8	14 1/2	53	2 1/4
SDAF 23288	21 5/8	22 1/4		8 9/32	35 3/4	18	5 3/4	47 1/8	48 7/8	15	54 1/4	2 1/2
SDAF 23092	18 3/4	19 1/4		5 7/8	30 1/2	15 1/2	5 1/2	41 3/4	43 1/2	12 1/4	48 3/4	2 1/4
SDAF 23192	21 5/8	22 1/4		7 1/2	35 3/4	18	5 3/4	47 1/8	48 7/8	15	54 1/4	2 1/2
SDAF 23096	21	21 3/4		5 29/32	33 3/4	17	5 1/2	44 3/8	46 1/8	14 1/2	53	2 1/4
SDAF 23196	21 5/8	22 1/4		7 21/32	35 3/4	18	5 3/4	47 1/8	48 7/8	15	54 1/4	2 1/2
SDAF 230/500	21	21 3/4		6 1/2	33 3/4	17	5 1/2	44 3/8	46 1/8	14 1/2	53	2 1/4
SDAF 230/530	21 5/8	22 1/4		6 27/32	35 3/4	18	5 3/4	47 1/8	48 7/8	15	54 1/4	2 1/2

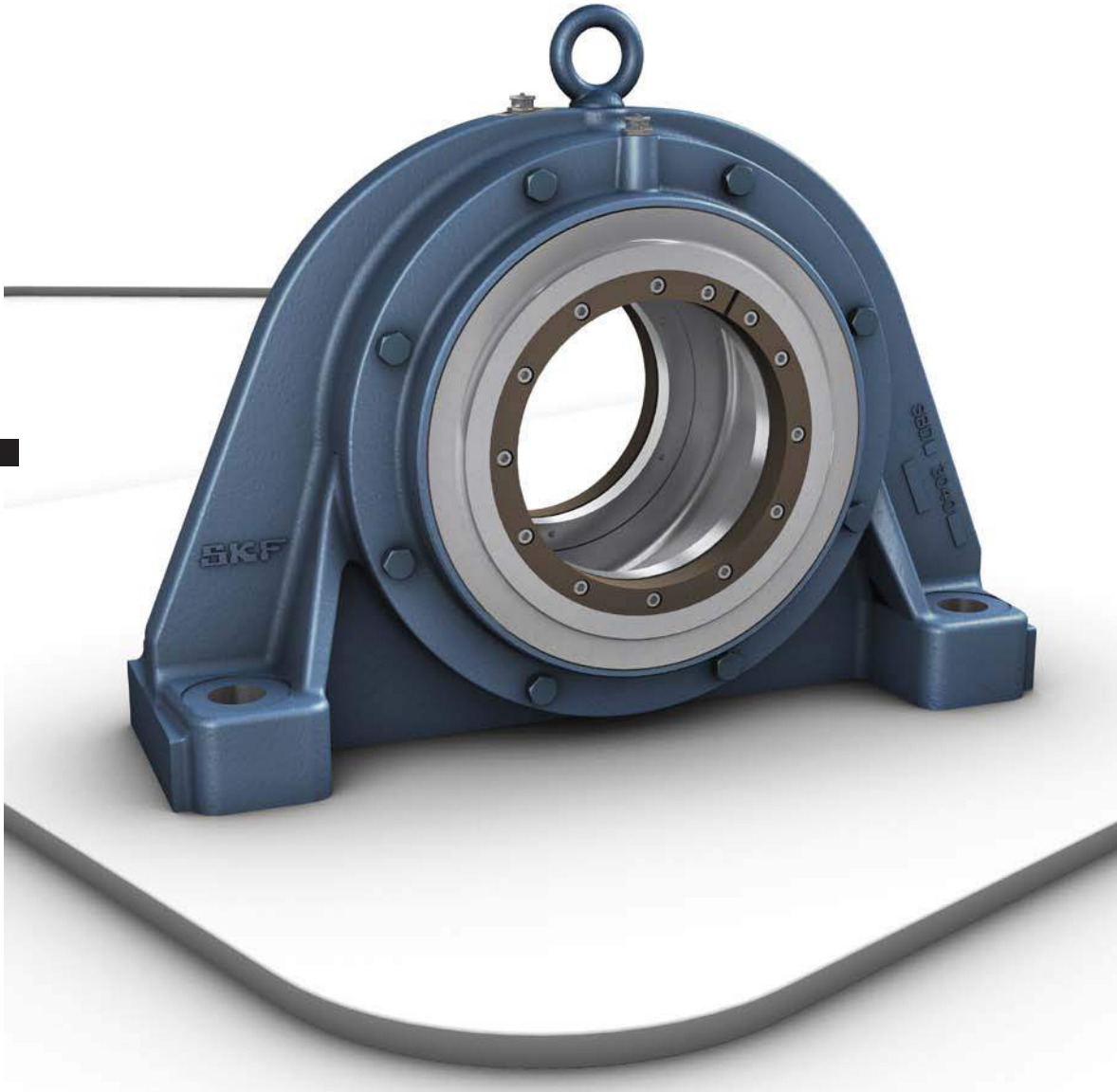
SKF

Non-split plummer block housings and take-up housings SBD and THD series

Bearing types
- Spherical roller bearings
- CARB toroidal roller bearings (optional)

Bearing dimension series
- 22, 30, 31, 32

Shaft diameter range
- 60 to 420 mm (SBD)
- 50 to 400 mm (THD)

Typical shaft-bearing combinations
- Plain shaft with bearing on an adapter sleeve (SBD and THD)
- Stepped shaft with bearing on an adapter sleeve (SBD)
- Stepped shaft with bearing on a cylindrical seat (SBD)
- Multi-stepped shaft with bearing on a cylindrical seat (SBD)

Seals
- Labyrinth
- Heavy-duty (optional)

Lubrication
- Grease

Materials
- Spheroidal graphite cast iron
- Cast steel (optional)
- Grey cast iron (optional)

Mounting
- Four-bolt mounting (SBD)

Compliance to standards
- Not standardized

SBD plummer (pillow) block housings and THD take-up housings are non-split housings designed to accommodate heavy loads acting in different directions. These types of loads are typically encountered in conveyors, roller beds and crushers. Highly reliable bearing arrangements can be designed using SBD or THD housings together with SKF Explorer bearings. In conveyors, SBD and THD housings are often used together.

Non-split plummer block housings and take-up housings SBD and THD series

Designations 487

Standard housing design 488
Features and benefits 489
Housing material 489
Paint, corrosion protection 489
Dimension standards 489

Housing variants 490

Sealing solutions 490
Standard seals 490
Using sealed bearings 492
Special seals 492

Design considerations 493
Typical shaft-bearing combinations . . . 493
Locating and non-locating bearing positions 494
Load carrying capacity 494
Operating temperature 495
Operating speed 495
Shaft specifications 495
Attachment bolt recommendations 495

Lubrication 498
Initial grease fill 498
Relubrication 498

Mounting 501
Cap bolt torque specifications 501
Mounting and dismounting the adapter ring 501

Condition monitoring 501

Accessories 501

Ordering information 501

Product tables
10.1 SBD plummer block housings for bearings on an adapter sleeve and a plain shaft 502
10.2 SBD plummer block housings for bearings on an adapter sleeve and a stepped shaft 508
10.3 SBD plummer block housings for bearings on a cylindrical seat and a stepped shaft 514
10.4 SBD plummer block housings for bearings on a cylindrical seat and a multi-stepped shaft 520
10.5 THD take-up housings for bearings on an adapter sleeve and a plain shaft 526

Designations

Designation system for SBD plummer block housings and THD take-up housings

SBDD 2226 CAF

Series

SBD	Standard non-split plummer block housing
THD	Standard non-split take-up housing

Material

D	Spheroidal graphite cast iron
S	Cast steel
C	Grey cast iron

Size identification

22(00)	Housing for bearings in the 22 series
30(00)	Housing for bearings in the 30 series
31(00)	Housing for bearings in the 31 series
32(00)	Housing for bearings in the 32 series
..(00)	Size code of the bearing, (00) × 5 = bearing bore diameter [mm]

Suffixes[1)]

–	Housing for bearings on an adapter sleeve and a plain shaft
C	SBD housing for bearings on an adapter sleeve and a stepped shaft
E	SBD housing for bearings on a cylindrical seat and a stepped shaft
G	SBD housing for bearings on a cylindrical seat and a multi-stepped shaft
A	Housing for shaft end, one side closed
B	Housing for a through shaft
F	Housing for the locating bearing position
L	Housing for the non-locating bearing position

[1)] When multiple suffixes are used, they are listed in the same order as shown here.

Designation system for adapter rings

PSBD 115

Series

PSBD	Adapter ring for labyrinth seal

Size identification

...	Shaft diameter [mm]

Standard housing design

SBD plummer (pillow) block housings and THD take-up housings are non-split housings. They consist of a housing body and two covers. The covers are bolted to the body with six or eight bolts. SBD and THD housings are supplied with different covers depending on the shaft-bearing combination (→ **page 493**).

SBD housings are available in two designs (→ **fig. 1**), depending on the housing size. The main difference is the holes for the attachment bolts: one design has cast oblong holes, the other has drilled holes. Other design differences include the overall shape of the housing and the thickness of the reinforcement ribs.

THD housings have a special take-up design to maintain tension on a conveyor belt (→ **fig. 2**). SKF does not supply the frames.

Fig. 1

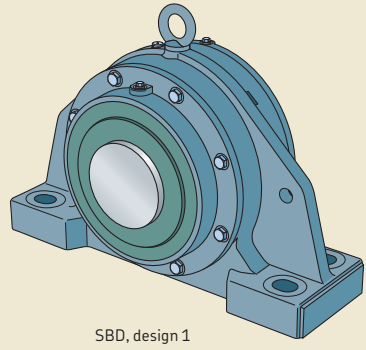

SBD, design 1

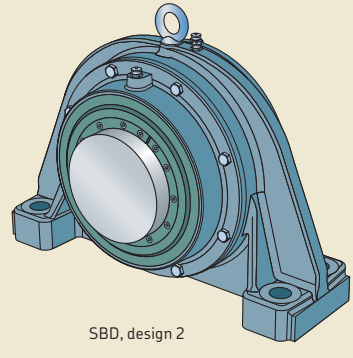

SBD, design 2

Fig. 2

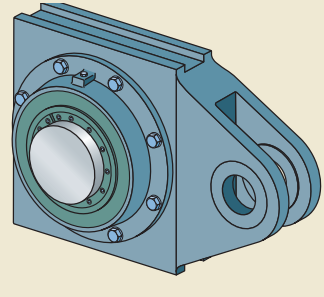

THD

Features and benefits

Standard SBD plummer block housings and THD take-up housings share some of the following features:

Stiff housing

Non-split housings provide a high degree of stiffness and can accommodate heavy radial loads in all directions.

Narrow width

SBD plummer block housings and THD take-up housings are narrow and can be used where space is limited (→ **fig. 3**).

Machined base ends

SBD housings have machined base ends to make alignment easier and provide good contact with stops when stops are used to accommodate loads parallel to the support surface (→ **fig. 4**).

Eye bolts

With the exception of the smallest housing (SBD 2213) all SBD plummer block housings have an eye bolt for safe and easy handling.

Housing material

Standard SBD plummer block housings and THD take-up housing bodies are made of spheroidal graphite cast iron (series designation SBDD or THDD). Covers are made of grey cast iron.

Paint, corrosion protection

SBD plummer block housings and THD take-up housings are painted blue (RAL 5007) using a solvent based alkyd/acryl paint. The paint protects the housing in accordance with ISO 12944-2, corrosivity category C2 (i.e. exterior atmospheres with low level of pollution, interior atmospheres where condensation may occur). The paint is not affected by most lubricating oils, cutting fluids or alkalescent washing chemicals. Housings can be repainted with most water or solvent based 1- or 2-component paints.

Unpainted surfaces are protected by a solventless rust inhibitor.

Fig. 3

Narrow width

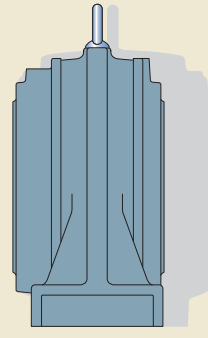

Fig. 4

Machined base ends

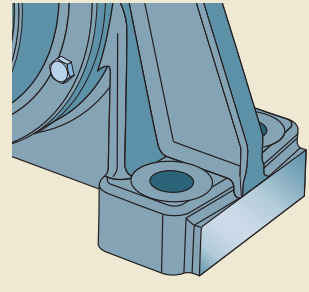

Dimension standards

The dimensions of SBD and THD housings are not standardized either nationally or internationally.

Housing variants

The following housing variants can be supplied on request:

- SBD or THD housings for CARB toroidal roller bearings
- SBD housings for bearings on a withdrawal sleeve
- Housings with taconite heavy-duty seals
- Housings made of cast steel (series designation SBDS or THDS)
- Housings made of grey cast iron (series designation SBDC or THDC)

For additional information about these variants, contact the SKF application engineering service.

Sealing solutions

SBD plummer (pillow) block housings and THD take-up housings are supplied with labyrinth seals as standard. They can also be used with sealed spherical roller bearings, and variants are available for taconite heavy-duty seals.

Standard seals

The labyrinth seal consists of a labyrinth ring made of grey cast iron, mounted on the shaft, which forms a multi-stage axial labyrinth with the seal grooves in the housing cover. The number of stages in the labyrinth ring varies with housing size.

In THD take-up housings, the labyrinth rings are locked on the shaft with adapter rings. In SBD plummer block housings, the labyrinth rings are locked in different ways depending on the housing type:

- fixed with an adapter ring (→ **fig. 5a**)
- clamped between the bearing and a shaft shoulder(→ **fig. 5b**)
- clamped between the bearing or the lock nut and another component on the shaft (→ **fig. 5c**)

The product tables show how the labyrinth rings are locked for the different housing designs. Adapter rings are supplied with the housing when needed. The adapter ring is identified by the prefix PSBD followed by the size (shaft diameter) in millimeters uncoded, e.g. PSBD 170. Adapter rings are listed in **table 1**.

In typical applications, the bearing and housing are completely filled with grease. Excess grease enters the labyrinths and improves the sealing effect. Most THD take-up housings and SBD plummer block housings have ducts to supply grease directly to the seals.

Seal characteristics are listed in **table 2**.

Fig. 5

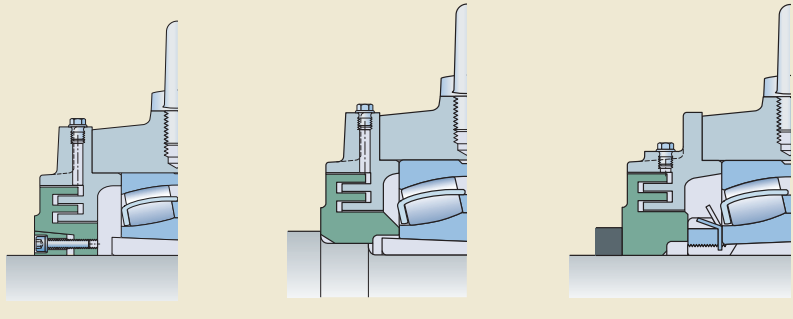

Table 1

Adapter rings for SBD plummer block housings and THD take-up housings

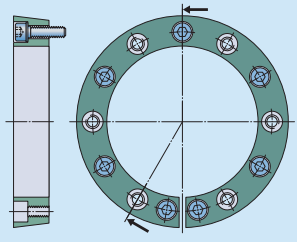

Adapter ring	Adapter ring bolts	
	Size	Tightening torque
–	–	Nm
PSBD 50	M 3	1
PSBD 55	M 3	1
PSBD 60	M 4	2
PSBD 70	M 5	4
PSBD 80	M 5	4
PSBD 90	M 5	4
PSBD 100	M 5	4
PSBD 110	M 5	4
PSBD 115	M 5	4
PSBD 120	M 5	4
PSBD 125	M 5	4
PSBD 130	M 5	4
PSBD 135	M 6	7
PSBD 140	M 6	7
PSBD 150	M 6	7
PSBD 160	M 6	7
PSBD 170	M 6	7
PSBD 180	M 6	7
PSBD 190	M 6	7
PSBD 200	M 8	10
PSBD 220	M 8	10
PSBD 240	M 8	10
PSBD 260	M 8	10
PSBD 280	M 8	10
PSBD 300	M 8	10
PSBD 320	M 8	10
PSBD 340	M 10	12
PSBD 360	M 10	12
PSBD 380	M 10	12
PSBD 400	M 10	12
PSBD 420	M 10	12

Table 2

Labyrinth seals for SBD plummer block and THD take-up housings

Material	
labyrinth ring	Cast iron
adapter ring	Fabric reinforced phenolic resin

Application conditions and requirements

Temperature	
with adapter ring	–30 to +100 °C *(–20 to +210 °F)*
without adapter ring	–50 to +200 °C *(–60 to +390 °F)*
Max. circumferential speed [m/s]	not limited
Max. misalignment [°]	0,3
Low friction	++
Axial shaft displacement	listed in the product tables
Shaft tolerance class	see *Shaft specifications*, **page 495**
Shaft roughness R_a [µm]	≤ 3,2

Sealing suitability

Dust	+
Fine particles	+
Coarse particles	+
Chips	++
Liquids when sprayed	––
Direct sunlight	++

Symbols: ++ very suitable
+ suitable
–– not suitable

Using sealed bearings

Using sealed bearings in housings with standard seals is a good solution for highly contaminated environments. The sealed bearing together with the housing seal and grease provide three layers of protection (→ *SKF three-barrier solution*, **page 39**). SBD plummer block housings and THD take-up housings can, in most cases, be used together with self-aligning sealed SKF bearings. When using taconite heavy-duty seals, a sealed bearing does not enhance the sealing effect during operation, but still protects the bearing against contaminants during mounting. For additional information, contact the SKF application engineering service.

Special seals

SBD plummer block housings and THD take-up housings are available with taconite heavy-duty seals. Taconite heavy-duty seals are grease filled labyrinth seals that include a V-ring. They can seal against taconite, a very fine-grained mineral which is extremely difficult to seal against.

Taconite seals require a modified housing, designation suffix /VZ335. For additional information, contact the SKF application engineering service.

Design considerations

For general information about system design, refer to the following sections:

- *Typical shaft-bearing combinations* (→ **page 41**)
- *Locating/non-locating bearing arrangements* (→ **page 40**)
- *Load carrying capacity* (→ **page 44**)
- *Axial load carrying capacity for bearings on sleeves* (→ **page 44**)
- *Specifications for shafts and housing support surfaces* (→ **page 45**)

For additional information about rolling bearings and adapter sleeves, refer to the product information available online at skf.com/bearings.

Typical shaft-bearing combinations

SBD plummer block housings can accommodate different shaft-bearing combinations (→ **fig. 6**):

- Plain shaft with bearing on an adapter sleeve, no designation suffix
- Stepped shaft with bearing on an adapter sleeve, designation suffix C
- Stepped shaft with bearing on a cylindrical seat, designation suffix E
- Multi-stepped shafts with bearings on a cylindrical seat, designation suffix G

THD take-up housings are available for bearings on an adapter sleeve on plain shafts (→ **fig. 7**).

Fig. 7

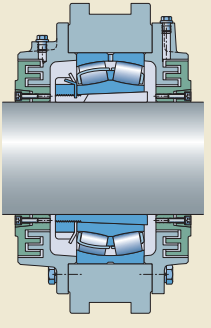

Fig. 6

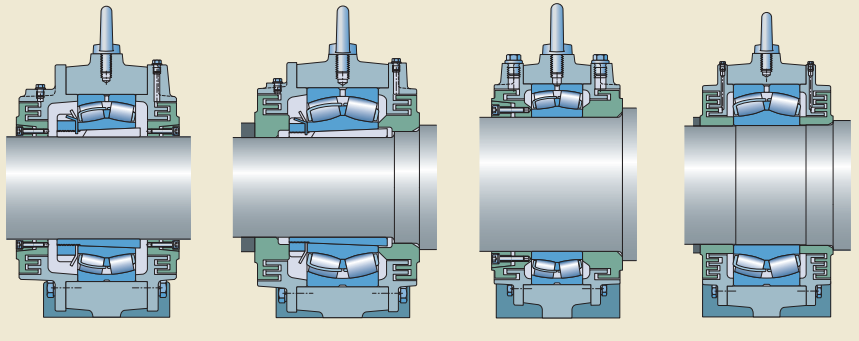

Plain shaft with bearing on an adapter sleeve

Stepped shaft with bearing on an adapter sleeve, designation suffix C

Stepped shaft with bearing on a cylindrical seat, designation suffix E

Multi-stepped shaft with bearing on a cylindrical seat, designation suffix G

End plates to secure a bearing on a cylindrical seat at the end of a shaft (→ **fig. 8**) are not supplied by SKF. Suitable dimensions for end plates are provided in the product tables.

SBD and THD housing bodies are supplied with different covers to fit the following shaft arrangements:

- housing for a shaft end, designation suffix A
- housing for a through shaft, designation suffix B
- housing for a locating bearing, designation suffix F
- housing for a non-locating bearing, designation suffix L

When ordering, the suffixes should be combined; see the order example on **page 501**.

Locating and non-locating bearing positions

SBD plummer block housings and THD take-up housings can be used for both the locating and non-locating bearing positions. The housing covers determine the width of the bearing seat. For a locating bearing, the covers provide a bearing seat that is the same width as the bearing (designation suffix F). For the non-locating bearing, the covers provide a bearing seat that is wider than the bearing (designation suffix L). The permissible axial displacement of the bearing is listed in the product tables (parameter "s").

Load carrying capacity

SBD plummer block housings and THD take-up housings are designed to accommodate radial loads acting in all directions as well as axial loads acting in both directions on the locating bearing position.

For SBD housings, the permissible radial loads depend on the bearing, the housing and the attachment bolts. Loads acting perpendicularly to the support surface are limited only by the bearing. SBD housings must be supported over the entire base area.

For information on the load carrying capacity of THD take-up housings, contact SKF application engineering service.

Fig. 8

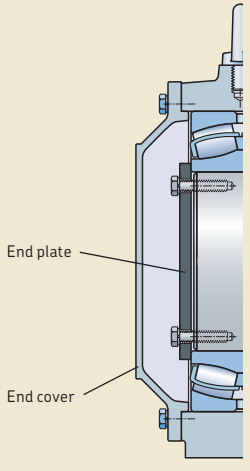

Breaking loads and safety factors

Guideline values for the breaking loads of housings made of spheroidal graphite cast iron are provided in **table 3** on **page 496**. To obtain the permissible load for a housing, the appropriate breaking load value should be divided by a factor selected based on the safety requirements. In general engineering, a safety factor of 6 is typical (→ *Load carrying capacity*, **page 44**).

For SBD housings made of cast steel, the values obtained from **table 3** on **page 496** should be multiplied by a factor of 1,25. For housings made of grey cast iron, the values should be multiplied by a factor of 0,63.

The load P_a is the axial breaking load of the housing. If the incorporated bearing is mounted on a sleeve, the permissible axial load for the sleeve must be checked.

Additional housing support for SBD plummer block housings

When the housing is subjected to loads acting parallel to the support surface, it may be necessary to provide a stop to counter the load.

When loads act at angles between 55° and 120°, or when the axial loads are greater than 5% of $P_{180°}$ (→ **table 3** on **page 496**), a stop should be provided to counter the load. The

stop should be sufficiently strong to accommodate the loads acting parallel to the support surface.

Operating temperature

The permissible operating temperature is mainly limited by the adapter ring (→ **table 2**, **page 491**) and the lubricant. For temperature limits of SKF bearings and lubricants, refer to the product information available online at skf.com/bearings.

The housing material does not have any additional temperature limits, except for very low temperature applications where impact strength could be a factor.

The housing paint is heat resistant up to 80 °C *(175 °F)* material temperature or 100 °C *(210 °F)* ambient temperature.

When temperatures outside the permissible range are expected, contact the SKF application engineering service.

Operating speed

The permissible operating speed of the incorporated bearing is not limited by the housing.

Shaft specifications

When a labyrinth ring is mounted on the same shaft diameter as the bearing, its seat should comply with the tolerances required by the bearing.

- Housings without suffix
  The recommended shaft tolerance class is h9Ⓔ.
- Housings with suffix C
  The recommended shaft tolerance class is h6Ⓔ(both under the adapter sleeve and the labyrinth rings).
- Housings with suffix E
  The recommended shaft tolerance class for bearings with a bore diameter up to 140 mm is p6Ⓔ, and for larger bearings r6Ⓔ. The shaft tolerance class under the outer labyrinth seal is h6Ⓔ.
- Housings with suffix G
  The recommended shaft tolerance class for bearings with a bore diameter up to 140 mm is p6Ⓔ, and for larger bearings r6Ⓔ. Where a labyrinth ring is mounted on a separate seat, the recommended shaft tolerance class is h6Ⓔ.

The recommended shaft tolerances under the labyrinth rings are also provided in the illustrations in the product tables.

Attachment bolt recommendations

In typical applications 8.8 class hexagonal bolts in accordance with ISO 4014 can be used together with washers. If the load does not act perpendicularly toward the base, it may be necessary to use stronger 10.9 class bolts.

SKF housings can withstand loads resulting from tightening the attachment bolts to the torque values recommended by bolt manufacturers (→ **table 5** on **page 500**). They are valid for oiled, but otherwise untreated, thread surfaces. SKF cannot guarantee that tightening to the recommended value will provide sufficient anchoring. Make sure that attachment bolts, dowels or stops, and a sufficiently strong support can accommodate all occurring loads.

Table 3

Breaking loads for SBDD housings (spheroidal graphite cast iron housings)

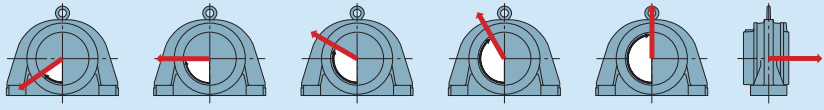

Housing Size				Breaking loads $P_{55°}$	$P_{90°}$	$P_{120°}$	$P_{150°}$	$P_{180°}$	P_a
–				kN					
2213				1)	1)	1)	1)	1)	1)
2218				1)	1)	1)	1)	1)	1)
2220	**3024**			1 040	840	800	640	800	160
		3122		1 500	1 200	1 320	1 060	1 320	265
2222	**3026**			1 240	1 000	880	720	880	175
2224	**3028**			1 400	1 120	960	800	960	190
		3124	**3222**	1 470	1 180	1 320	1 060	1 320	265
		3126	**3224**	1 580	1 260	1 360	1 090	1 360	270
2226	**3030**			1 600	1 280	1 680	1 360	1 680	320
		3128	**3226**	1 800	1 440	1 360	1 090	1 360	270
	3032			1 800	1 440	1 760	1 440	1 760	350
2228	**3034**			2 160	1 720	1 760	1 440	1 760	350
		3130	**3228**	2 160	1 720	1 400	1 120	1 400	280
2230	**3036**			2 400	1 920	1 760	1 440	1 760	350
		3132	**3230**	2 440	1 960	1 440	1 150	1 440	290
2232	**3038**			2 640	2 120	1 920	1 520	1 920	385
		3134	**3232**	2 800	2 240	1 520	1 220	1 520	305
2234	**3040**			3 080	2 440	2 400	1 920	2 400	480
		3136	**3234**	3 360	2 680	1 600	1 280	1 600	320
2236				3 480	2 800	2 720	2 160	2 720	545
2238	**3044**			3 480	2 800	2 720	2 160	2 720	545
		3138	**3236**	3 600	2 920	1 680	1 340	1 680	335
2240	**3048**			3 960	3 160	3 840	3 040	3 840	770
		3140	**3238**	4 400	3 560	1 800	1 440	1 800	360
2244	**3052**			4 440	3 560	3 920	3 120	3 920	785
		3144	**3240**	4 800	3 880	2 000	1 600	2 000	400
	3056			5 160	4 120	4 800	3 840	4 800	960
		3148	**3244**	5 360	4 320	2 400	1 920	2 400	480
2248	**3060**			5 720	4 560	4 960	4 000	4 960	990
		3152	**3248**	6 000	4 840	2 800	2 240	2 800	560
2252	**3064**			6 280	5 040	5 360	4 240	5 360	1 040
2256	**3068**			6 920	5 520	5 360	4 240	5 360	1 040
		3156	**3252**	7 360	5 920	3 280	2 640	3 280	655

1) Contact SKF for missing values

Table 3 cont.

Breaking loads for SBDD housings (spheroidal graphite cast iron housings)

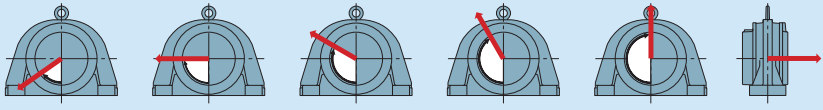

Housing Size				Breaking loads $P_{55°}$	$P_{90°}$	$P_{120°}$	$P_{150°}$	$P_{180°}$	P_a
–				kN					
2260	**3072**			7 560	6 040	6 400	5 120	6 400	1 280
		3160	**3256**	8 000	6 480	3 520	2 800	3 520	705
	3076			8 480	6 800	6 560	5 280	6 560	1 310
		3164	**3260**	9 360	7 480	4 000	3 200	4 000	800
2264	**3080**			9 440	7 600	7 120	5 680	7 120	1 440
	3084			10 500	8 440	7 280	5 760	7 280	1 440
		3168	**3264**	11 200	8 920	4 560	3 600	4 560	910
		3172		11 400	9 120	5 200	4 160	5 200	1 040
		3176	**3268**	12 800	10 200	5 200	4 160	5 200	1 040
		3180	**3272**	14 000	11 200	5 760	4 560	5 760	1 150
			3276	14 800	11 800	6 400	5 120	6 400	1 280
		3184		15 200	12 200	6 400	5 120	6 400	1 440
			3280	17 600	14 100	7 280	5 840	7 280	1 460
			3284	19 200	15 200	8 400	6 720	8 400	1 680

Lubrication

SBD plummer (pillow) block housings and THD take-up housings are intended for grease lubrication. The lubricant should be selected based on the operating conditions of the bearing. For additional information about lubricant selection, refer to the product information available online at skf.com/bearings.

Initial grease fill

If no other requirements exist, the free space in the bearing should be completely filled with grease and the free space in the housing should be filled to 70 to 80% of its volume.

At speeds above 1/3 of the bearing limiting speed, the values in **table 4** should be reduced by 20 to 30% to avoid high operating temperatures. For bearing limiting speeds, refer to the product information available online at skf.com/bearings.

For highly contaminated environments, use the SKF three-barrier solution (→ **page 39**). In this case, check that the housing can accommodate sealed, self-aligning SKF bearings. For additional information, contact the SKF application engineering service.

Grease quantities for an 80% fill are listed in **table 4**, **page 499**. The values are valid for a typical lithium grease (about 0,95 g/cm^3) and include the grease for the bearing.

In most applications, the initial grease fill will adequately lubricate the bearing until the grease is exchanged during the next planned maintenance interval.

Relubrication

Some high speed, high temperature or heavy load applications may require the bearing to be relubricated. SBD plummer block housings and THD take-up housings have a button head grease fitting to lubricate the bearing in accordance with DIN 3404 (→ **figs. 9** and **10**). SBD housings have the grease fitting centred at the top of the housing body, while THD housings have the grease fitting centered on the side of the housing body.

The grease fitting can only be used to relubricate spherical roller bearings with a relubrication feature (a lubrication groove and holes in the outer ring). When applying grease via the relubrication feature, the shaft should be rotating.

CARB toroidal roller bearings should be relubricated from the side and not via the

Fig. 9

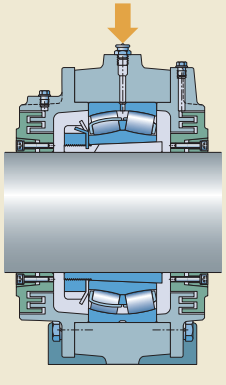

Grease fitting in SBD housing

Fig. 10

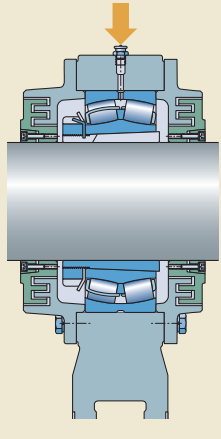

Grease fitting in THD housing

Table 4

Initial grease fill

Housing	Initial fill [1] Housing type A	B
–	kg	
SBD 2213	0,10	0,10
SBD 2218	0,25	0,25
SBD 2220	0,90	0,40
SBD 2222	1,00	0,50
SBD 2224	1,00	0,50
SBD 2226	1,10	0,60
SBD 2228	1,20	0,80
SBD 2230	1,20	0,90
SBD 2232	1,30	1,00
SBD 2234	1,40	1,20
SBD 2236	1,80	1,50
SBD 2238	1,80	1,60
SBD 2240	2,00	1,80
SBD 2244	2,60	2,40
SBD 2248	3,60	3,40
SBD 2252	4,10	3,80
SBD 2256	5,20	4,90
SBD 2260	5,80	5,50
SBD 2264	7,90	7,50
SBD 3024	0,40	0,30
SBD 3026	0,50	0,40
SBD 3028	0,50	0,50
SBD 3030	0,60	0,60
SBD 3032	0,70	0,60
SBD 3034	0,80	0,70
SBD 3036	1,00	0,90
SBD 3038	1,10	1,00
SBD 3040	1,30	1,10
SBD 3044	1,70	1,50
SBD 3048	2,00	1,70
SBD 3052	2,50	2,30
SBD 3056	2,80	2,60
SBD 3060	3,70	3,30
SBD 3064	4,20	3,80
SBD 3068	5,20	4,70
SBD 3072	6,10	5,40
SBD 3076	6,90	6,00
SBD 3080	8,20	7,30
SBD 3084	8,90	7,90

Housing	Initial fill [1] Housing type A	B
–	kg	
SBD 3122	0,40	0,30
SBD 3124	0,50	0,40
SBD 3126	0,50	0,50
SBD 3128	0,70	0,60
SBD 3130	0,90	0,90
SBD 3132	1,20	1,10
SBD 3134	1,40	1,30
SBD 3136	1,60	1,50
SBD 3138	2,00	1,80
SBD 3140	2,40	2,10
SBD 3144	2,90	2,50
SBD 3148	3,40	3,00
SBD 3152	4,40	3,80
SBD 3156	4,80	4,20
SBD 3160	6,00	5,20
SBD 3164	7,50	6,40
SBD 3168	10,0	8,20
SBD 3172	11,8	9,30
SBD 3176	14,0	11,0
SBD 3180	15,5	12,5
SBD 3184	18,0	15,0
SBD 3222	0,60	0,50
SBD 3224	0,80	0,70
SBD 3226	0,90	0,80
SBD 3228	1,10	1,00
SBD 3230	1,30	1,30
SBD 3232	1,60	1,50
SBD 3234	1,80	1,80
SBD 3236	2,10	2,00
SBD 3238	2,40	2,30
SBD 3240	2,60	2,50
SBD 3244	3,40	3,30
SBD 3248	4,30	4,00
SBD 3252	5,10	4,80
SBD 3260	7,00	6,30
SBD 3264	8,20	7,30
SBD 3268	9,90	8,80
SBD 3272	12,0	10,5
SBD 3276	14,5	12,5
SBD 3280	18,0	16,0
SBD 3284	23,0	20,5

Housing	Initial fill [1] Housing type A	B
–	kg	
THD 2211	0,070	0,070
THD 2212	0,080	0,080
THD 2213	0,10	0,10
THD 2216	0,20	0,20
THD 2218	0,25	0,25
THD 2220	0,40	0,35
THD 2222	0,55	0,50
THD 2224	0,60	0,55
THD 2228	0,85	0,75
THD 3030	0,60	0,55
THD 3034	0,90	0,75
THD 3038	1,15	1,00
THD 3040	1,45	1,20
THD 3044	1,75	1,50
THD 3052	4,10	3,55
THD 3132	1,20	1,10
THD 3134	1,35	1,25
THD 3136	2,40	1,60
THD 3138	2,85	2,60
THD 3140	2,30	2,00
THD 3144	2,90	2,50
THD 3148	3,40	3,00
THD 3152	4,40	3,75
THD 3160	6,00	5,15
THD 3164	7,50	6,40
THD 3168	10,0	8,20
THD 3176	14,0	11,0

Housing	Initial fill [1] Housing type A	B
–	kg	
THD 3222	0,55	0,50
THD 3224	0,75	0,70
THD 3226	0,85	0,80
THD 3228	1,05	1,00
THD 3230	1,30	1,25
THD 3232	1,55	1,50
THD 3236	2,10	2,00
THD 3240	2,60	2,50
THD 3244	3,40	3,25
THD 3248	4,25	4,00
THD 3252	5,05	4,75
THD 3256	5,50	5,00
THD 3260	7,00	6,25
THD 3264	8,15	7,25
THD 3268	9,85	8,75
THD 3272	12,0	10,5
THD 3276	14,5	12,5
THD 3280	18,0	16,0
THD 3284	23,0	20,5

[1] Based on 80% fill

10

Table 5

Cover bolts and attachment bolts

Housing Size 22(00)	30(00)	31(00)	32(00)	Cover bolts Size	Tightening torque	Attachment bolts[1] Size	Tightening torque[2]
–				–	Nm	–	Nm
2211				M 8	25	–	–
2212				M 8	25	–	–
2213				M 8	25	M 16	200
2216				M 8	25	–	–
2218	**3024**			M 8	25	M 20	385
2220				M 8	25	M 20	385
2222	**3026**	**3122**		M 12	80	M 20	385
		3124		M 12	80	M 20	385
		3126		M 12	80	M 20	385
		3128		M 12	80	M 20	385
2224	**3028**			M 8	25	M 24	665
2226	**3030**			M 10	50	M 24	665
	3032			M 10	50	M 24	665
		3130	**3222**	M 12	80	M 24	665
		3132	**3224**	M 12	80	M 24	665
			3226	M 12	80	M 24	665
			3228	M 12	80	M 24	665
2228	**3034**			M 10	50	M 30	1 310
2230	**3036**	**3134**		M 12	80	M 30	1 310
2232	**3038**			M 12	80	M 30	1 310
2234	**3040**			M 12	80	M 30	1 310
		3136	**3230**	M 16	200	M 30	1 310
			3232	M 16	200	M 30	1 310
			3234	M 16	200	M 30	1 310
			3236	M 16	200	M 30	1 310
			3238	M 16	200	M 30	1 310
2236	**3044**	**3138**	**3240**	M 16	200	M 36	2 280
2238	**3048**	**3140**		M 16	200	M 36	2 280
2240	**3052**	**3144**		M 16	200	M 36	2 280
2244	**3056**			M 16	200	M 36	2 280
2248	**3060**	**3148**	**3244**	M 20	385	M 36	2 280
2252	**3064**	**3152**	**3248**	M 20	385	M 36	2 280
2256	**3068**		**3252**	M 20	385	M 36	2 280
2260	**3072**			M 20	385	M 36	2 280
		3156	**3256**	M 24	665	M 36	2 280
		3160		M 24	665	M 36	2 280
		3164		M 24	665	M 36	2 280
	3076			M 20	385	M 48	5 450
2264	**3080**	**3168**	**3260**	M 24	665	M 48	5 450
	3084	**3172**	**3264**	M 24	665	M 48	5 450
		3176	**3268**	M 30	1 310	M 56	8 710
		3180	**3272**	M 30	1 310	M 64	13 100
		3184	**3276**	M 30	1 310	M 64	13 100
			3280	M 30	1 310	M 64	13 100
			3284	M 30	1 310	M 64	13 100

[1] Valid for SBD housings only
[2] Recommended by bolt manufacturers

grease fitting. Therefore, CARB toroidal roller bearings need customized SBD and THD housings. For more information, contact the SKF application engineering service.

Mounting

SBD and THD housings must be mounted properly using the appropriate tools and state of the art mechanical mounting methods. All associated components must meet certain basic requirements (→ *Specifications for shafts and housing support surfaces* on **page 45**).

For information about mounting rolling bearings, refer to the *SKF bearing maintenance handbook* or skf.com/mount.

Cover bolt torque specifications

Cover bolts should be tightened to the torque values listed in **table 5**. The cover bolts are in accordance with ISO-4017.

Mounting and dismounting the adapter ring

The adapter ring, which locks the labyrinth ring in place, has plain holes for mounting and threaded holes for dismounting. The adapter ring bolts should be tightened to the torque values listed in **table 1** on **page 491**.

Condition monitoring

If connections for condition monitoring sensors are required, contact the SKF application engineering service.

Accessories

There are several accessories available for SBD and THD housings, including automatic lubricators, centralized lubrication systems and adapters for grease fittings. In some cases, an adapter is needed to attach the accessory to the housing. For additional information, refer to *SKF tools and products* (→ **page 47**).

Ordering information

SBD plummer (pillow) block housings and THD take-up housings are supplied with the appropriate covers, labyrinth rings and, if needed, adapter rings. End plates to secure a bearing on a cylindrical seat at the end of a shaft are not supplied with the housings. Bearings and adapter sleeves must be ordered separately.

Order example

Two SBD plummer block housings are required for two 22213 E spherical roller bearings. One housing accommodates the non-locating bearing at the end of the shaft. The other housing accommodates the locating bearing and a through shaft.

The following items should be ordered:

- 1 housing SBDD 2213 AL
- 1 housing SBDD 2213 BF

10.1 SBD plummer block housings for bearings on an adapter sleeve and a plain shaft

d_a **60 – 140** mm

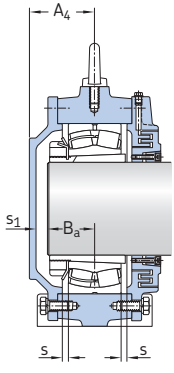

Type AL
Non-locating bearing
Housing for shaft end

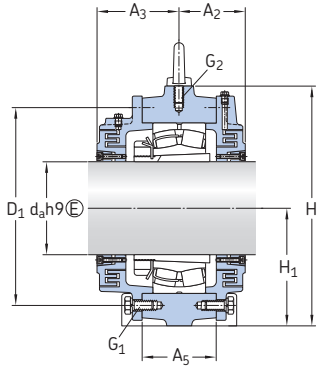

Type BF
Locating bearing
Housing for through shaft

Shaft diam.	Housing	Appropriate parts Bearing[1]	Adapter sleeve[2]	Adapter ring (included)	Dimensions Housing						
d_a					A_1	A_2	A_3	A_4	A_5	D_1	H
mm	–	–			mm						
60	**SBDD 2213**	22213 EK	H 313	PSBD 60	95	50	65	45	58	135	165
80	**SBDD 2218**	22218 EK	H 318	PSBD 80	110	60	70	51	55	185	220
90	**SBDD 2220**	22220 EK	H 320	PSBD 90	110	70	85	63	56	195	230
100	**SBDD 3122**	23122 CCK/W33	H 3122	PSBD 100	150	81	102	83	80	215	270
	SBDD 2222	22222 EK	H 322	PSBD 100	120	78	90	68	64	215	260
	SBDD 3222	23222 CCK/W33	H 2322	PSBD 100	130	91	103	76	90	230	285
110	**SBDD 3024**	23024 CCK/W33	H 3024	PSBD 110	110	63	83	63	56	195	230
	SBDD 3124	23124 CCK/W33	H 3124	PSBD 110	140	76	93	78	85	230	285
	SBDD 2224	22224 EK	H 3124	PSBD 110	130	80,5	95,5	68	70	230	275
	SBDD 3224	23224 CCK/W33	H 2334	PSBD 110	140	93	108	78	95	245	305
115	**SBDD 3026**	23026 CCK/W33	H 3026	PSBD 115	120	68	88	68	64	215	260
	SBDD 3126	23126 CCK/W33	H 3126	PSBD 115	140	80	100	80	90	240	295
	SBDD 2226	22226 EK	H 3126	PSBD 115	140	88	98	70	76	245	290
	SBDD 3226	23226 CCK/W33	H 2336	PSBD 115	150	103	108	78	100	260	325
125	**SBDD 3028**	23028 CCK/W33	H 3028	PSBD 125	130	68	88	68	70	230	275
	SBDD 3128	23128 CCK/W33	H 3128	PSBD 125	150	85	110	85	95	260	315
	SBDD 2228	22228 CCK/W33	H 3128	PSBD 125	160	94	104	83	82	275	330
	SBDD 3228	23228 CCK/W33	H 2338	PSBD 125	160	108	118	88	110	285	350
135	**SBDD 3030**	23030 CCK/W33	H 3030	PSBD 135	140	73	94	70	76	245	290
	SBDD 3130	23130 CCK/W33	H 3130	PSBD 135	200	93	113	93	102	285	345
	SBDD 2230	22230 CCK/W33	H 3130	PSBD 135	170	98	108	88	90	300	360
	SBDD 3230	23230 CCK/W33	H 2330	PSBD 135	170	113	123	93	120	305	375
140	**SBDD 3032**	23032 CCK/W33	H 3032	PSBD 140	150	78	98	76	76	260	310
	SBDD 3132	23132 CCK/W33	H 3132	PSBD 140	200	98	123	98	110	310	368
	SBDD 2232	22232 CCK/W33	H 3132	PSBD 140	180	101	116	88	96	315	370
	SBDD 3232	23232 CCK/W33	H 2332	PSBD 140	180	118	133	98	130	330	395

[1] Only typical bearings are listed. Other bearing variants can also fit the housing.
[2] Only typical adapter sleeves are listed. Other variants can also fit the housing.

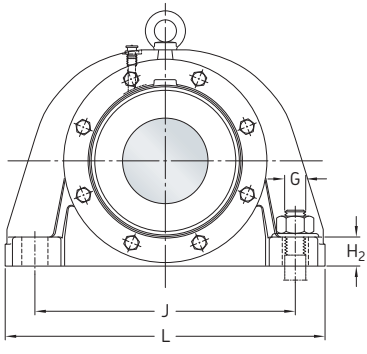

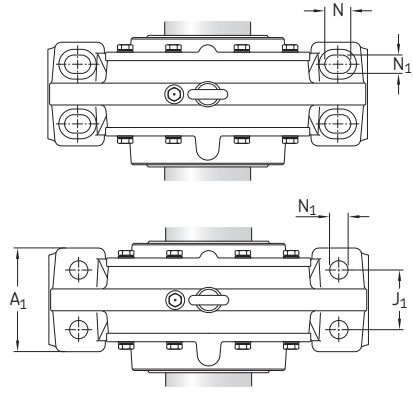

Shaft diam.	**Dimensions** Housing										**Eye bolt** acc. to DIN 580	**Dimensions** Other		**Mass** Housing type	
d_a	H_1	H_2	J	J_1	L	N	N_1	s	G	G_1	G_2	B_a	s_1	A	B
mm	mm										–	mm		kg	
60	80	25	220	50	280	–	19	2	16	M 8	–	32	6	8,9	9,3
80	110	38	290	60	370	–	24	2	20	M 8	M 10	40	5	21	23
90	115	35	300	60	370	–	24	2	20	M 8	M 12	45	11	23	25
100	130	40	300	80	400	35	25	2	20	M 12	M 12	52	25	40	45
	130	38	340	60	410	–	24	2	20	M 8	M 12	50	11	37	40
	140	42	350	70	440	–	28	2	24	M 12	M 16	60	9	46	50
110	115	35	300	60	370	–	24	2	20	M 8	M 12	48	8	19	20
	140	40	330	80	410	35	25	2	20	M 12	M 12	56	13	45	50
	140	40	360	70	430	–	28	3	24	M 8	M 12	55	6	43	46
	150	42	370	75	470	35	30	2	24	M 12	M 16	64	7	50	55
115	130	38	340	60	410	–	24	2	20	M 8	M 12	52	9	28	30
	145	40	350	80	430	35	25	2	20	M 12	M 12	58	15	50	55
	145	42	370	80	455	–	28	3	24	M 10	M 12	57	5	52	56
	160	45	400	85	500	40	30	2	24	M 12	M 16	66	5	60	65
125	140	40	360	70	430	–	28	3	24	M 8	M 12	54	7	32	35
	155	45	380	85	470	35	25	2	20	M 12	M 12	62	16	58	65
	165	50	420	95	510	–	35	3	30	M 10	M 12	62	13	65	70
	170	50	430	85	530	40	30	3	24	M 16	M 20	72	9	74	80
135	145	42	370	80	455	–	28	3	24	M 10	M 12	56	6	37	40
	170	60	450	110	580	45	35	3	24	M 12	M 16	70	15	78	85
	180	52	450	100	540	–	35	3	30	M 12	M 16	66	14	77	82
	180	54	450	90	550	45	35	3	30	M 16	M 20	78	7	87	95
140	155	45	390	90	480	–	28	3	24	M 10	M 12	62	6	41	45
	180	55	430	110	540	40	30	3	24	M 12	M 16	75	15	90	100
	185	55	480	105	570	–	35	3	30	M 12	M 16	72	8	90	96
	190	58	490	105	600	–	35	3	30	M 16	M 20	84	6	100	110

10.1 SBD plummer block housings for bearings on an adapter sleeve and a plain shaft
d_a 150 – 240 mm

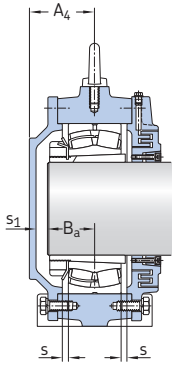

Type AL
Non-locating bearing
Housing for shaft end

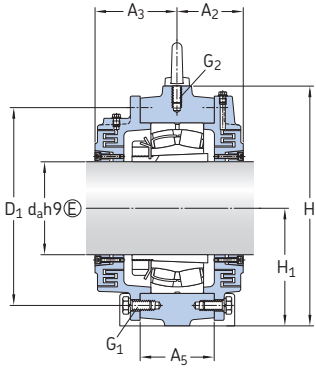

Type BF
Locating bearing
Housing for through shaft

Shaft diam.	Housing	Appropriate parts Bearing[1]	Adapter sleeve[2]	Adapter ring (included)	Dimensions Housing						
d_a					A_1	A_2	A_3	A_4	A_5	D_1	H
mm	–	–			mm						
150	**SBDD 3034**	23034 CCK/W33	H 3034	PSBD 150	160	78	103	83	82	280	330
	SBDD 3134	23134 CCK/W33	H 3134	PSBD 150	200	113	136	112	120	330	395
	SBDD 2234	22234 CCK/W33	H 3134	PSBD 150	190	112,5	127,5	97	104	335	400
	SBDD 3234	23234 CCK/W33	H 2334	PSBD 150	200	128	143	103	135	345	410
160	**SBDD 3036**	23036 CCK/W33	H 3036	PSBD 160	170	83	108	88	90	305	360
	SBDD 3136	23136 CCK/W33	H 3136	PSBD 160	200	118	138	116	125	350	410
	SBDD 2236	22236 CCK/W33	H 3136	PSBD 160	200	118	133	102	110	360	430
	SBDD 3236	23236 CCK/W33	H 2336	PSBD 160	210	133	148	108	140	360	430
170	**SBDD 3038**	23038 CCK/W33	H 3038	PSBD 170	180	93	118	88	96	315	370
	SBDD 3138	23138 CCK/W33	H 3138	PSBD 170	210	123	143	120	130	370	435
	SBDD 2238	22238 CCK/W33	H 3138	PSBD 170	200	118	133	102	110	370	430
	SBDD 3238	23238 CCK/W33	H 2338	PSBD 170	220	138	153	113	150	385	455
180	**SBDD 3040**	23040 CCK/W33	H 3040	PSBD 180	190	97	122	97	104	340	400
	SBDD 3140	23140 CCK/W33	H 3140	PSBD 180	220	127	147	127	135	380	455
	SBDD 2240	22240 CCK/W33	H 3140	PSBD 180	210	122	134,5	107	118	390	450
	SBDD 3240	23240 CCK/W33	H 2340	PSBD 180	240	138	158	118	165	405	475
200	**SBDD 3044**	23044 CCK/W33	OH 3044 H	PSBD 200	200	102	137	102	110	370	430
	SBDD 3144	23144 CCK/W33	OH 3144 H	PSBD 200	230	135	160	135	150	420	485
	SBDD 2244	22244 CCK/W33	OH 3144 H	PSBD 200	220	124,5	159,5	117	128	435	500
	SBDD 3244	23244 CCK/W33	OH 2344 H	PSBD 200	250	148	183	133	175	445	525
220	**SBDD 3048**	23048 CCK/W33	OH 3048 H	PSBD 220	210	102	142	107	118	390	450
	SBDD 3148	23148 CCK/W33	OH 3148 H	PSBD 220	250	152	182	142	160	455	550
	SBDD 2248	22248 CCK/W33	OH 3148 H	PSBD 220	250	130	165	132	144	490	570
	SBDD 3248	23248 CCK/W33	OH 2348 H	PSBD 220	250	148	188	148	190	490	590
240	**SBDD 3052**	23052 CCK/W33	OH 3052 H	PSBD 240	220	107	147	117	128	435	500
	SBDD 3152	23152 CCK/W33	OH 3152 H	PSBD 240	250	152	187	152	175	490	590
	SBDD 2252	22252 CCK/W33	OH 3152 H	PSBD 240	260	145	182,5	137	154	520	590
	SBDD 3252	23252 CCK/W33	OH 2352 H	PSBD 240	290	167	208	158	205	535	625

[1] Only typical bearings are listed. Other bearing variants can also fit the housing.
[2] Only typical adapter sleeves are listed. Other variants can also fit the housing.

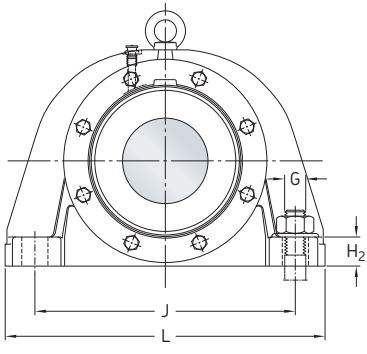

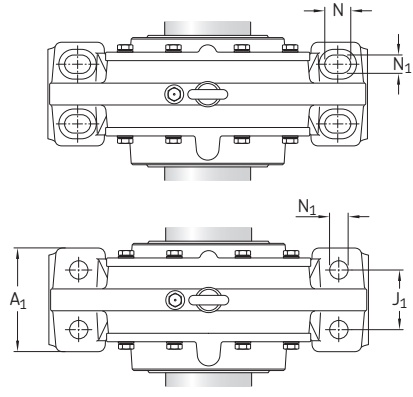

Shaft diam.	Dimensions Housing										Eye bolt acc. to DIN 580	Dimensions Other		Mass Housing type	
d_a	H_1	H_2	J	J_1	L	N	N_1	s	G	G_1	G_2	B_a	s_1	A	B
mm	mm										–	mm		kg	
150	165	50	420	95	510	–	35	3	30	M 10	M 12	66	9	50	55
	190	60	470	110	570	45	35	3	30	M 12	M 20	78	26	100	110
	200	60	510	110	600	–	35	4	30	M 12	M 16	75	14	103	110
	200	62	525	110	640	45	35	3	30	M 16	M 20	88	7	130	140
160	180	52	450	100	540	–	35	3	30	M 12	M 16	70	10	64	70
	200	60	490	105	600	45	35	3	30	M 16	M 20	82	26	118	130
	215	65	540	115	640	–	42	4	36	M 16	M 20	78	14	112	120
	210	65	550	120	680	45	35	3	30	M 16	M 20	90	10	147	160
170	185	55	480	105	570	–	35	3	30	M 12	M 16	72	8	74	80
	210	65	550	120	680	45	30	3	36	M 16	M 20	88	22	146	160
	215	65	540	115	640	–	42	4	36	M 16	M 20	82	10	126	135
	220	75	560	120	710	45	35	4	30	M 16	M 20	95	10	170	185
180	200	60	510	110	600	–	35	4	30	M 12	M 16	78	11	83	90
	220	85	560	120	710	52	42	3	36	M 16	M 24	95	22	175	190
	225	70	560	120	680	–	42	4	36	M 16	M 20	85	12	145	155
	235	75	640	140	780	52	42	4	36	M 16	M 24	100	10	200	220
200	215	65	540	115	640	–	42	4	36	M 16	M 20	80	12	107	115
	235	75	640	140	780	52	42	4	36	M 16	M 24	100	25	205	220
	250	75	600	130	720	–	42	4	36	M 16	M 20	95	10	187	200
	260	80	700	140	850	52	42	4	36	M 20	M 24	112	11	270	290
220	225	70	560	120	680	–	42	4	36	M 16	M 20	85	12	120	130
	270	80	720	140	890	52	42	4	36	M 20	M 24	106	26	250	270
	285	85	690	150	820	–	42	5	36	M 20	M 24	105	15	235	250
	290	90	750	140	900	52	42	5	36	M 20	M 24	122	16	345	370
240	250	75	600	130	720	–	42	4	36	M 16	M 20	92	13	153	165
	290	90	750	140	900	52	42	4	36	M 20	M 24	118	24	300	320
	295	90	730	160	860	–	42	5	36	M 20	M 24	110	13	290	310
	310	95	800	160	960	65	42	5	36	M 20	M 24	132	16	435	470

10.1 SBD plummer block housings for bearings on an adapter sleeve and a plain shaft
d_a 260 – 400 mm

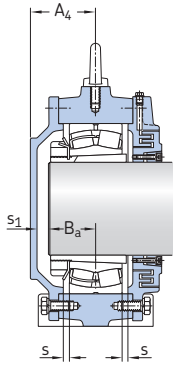

Type AL
Non-locating bearing
Housing for shaft end

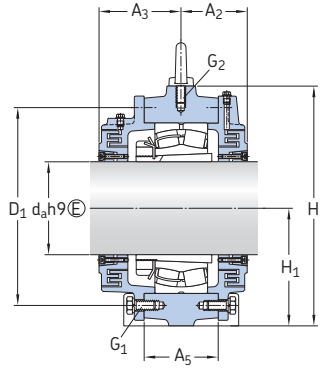

Type BF
Locating bearing
Housing for through shaft

Shaft diam.	Housing	Appropriate parts Bearing[1]	Adapter sleeve[2]	Adapter ring (included)	Dimensions Housing						
d_a					A_1	A_2	A_3	A_4	A_5	D_1	H
mm	–	–			mm						
260	**SBDD 3056**	23056 CCK/W33	OH 3056 H	PSBD 260	240	117	157	122	128	455	520
	SBDD 3156	23156 CCK/W33	OH 3156 H	PSBD 260	250	157	197	165	175	510	590
	SBDD 2256	22256 CCK/W33	OH 3156 H	PSBD 260	270	152	192	147	158	555	630
	SBDD 3256	23256 CCK/W33	OH 2356 H	PSBD 260	300	178	218	163	210	555	645
280	**SBDD 3060**	23060 CCK/W33	OH 3060 H	PSBD 280	250	122	167	132	144	500	570
	SBDD 3160	23160 CCK/W33	OH 3160 H	PSBD 280	300	162	207	167	190	550	655
	SBDD 2260	22260 CCK/W33	OH 3160 H	PSBD 280	280	160	191	152	168	585	660
	SBDD 3260	23260 CCK/W33	OH 3260 H	PSBD 280	330	182	222	187	230	600	705
300	**SBDD 3064**	23064 CCK/W33	OH 3064 H	PSBD 300	260	122	172	137	154	520	590
	SBDD 3164	23164 CCK/W33	OH 3164 H	PSBD 300	300	177	212	187	210	590	702
	SBDD 2264	22264 CCK/W33	OH 3164 H	PSBD 300	320	175	202	167	180	640	720
	SBDD 3264	23264 CCK/W33	OH 3264 H	PSBD 300	360	192	237	187	250	640	760
320	**SBDD 3068**	23068 CCK/W33	OH 3068 H	PSBD 320	270	132	177	147	158	565	630
	SBDD 3168	23168 CCK/W33	OH 3168 H	PSBD 320	360	197	242	237	220	630	735
	SBDD 3268	23268 CAK/W33	OH 3268 H	PSBD 320	380	202	272	237	265	680	810
340	**SBDD 3072**	23072 CCK/W33	OH 3072 H	PSBD 340	280	132	182	152	168	585	660
	SBDD 3172	23172 CCK/W33	OH 3172 H	PSBD 340	370	197	247	243	225	650	760
	SBDD 3272	23272 CAK/W33	OH 3272 H	PSBD 340	400	227	282	247	275	710	825
360	**SBDD 3076**	23076 CCK/W33	OH 3076 H	PSBD 360	300	137	187	157	168	605	680
	SBDD 3176	23176 CAK/W33	OH 3176 H	PSBD 360	380	202	257	254	230	680	790
	SBDD 3276	23276 CAK/W33	OH 3276 H	PSBD 360	405	232	297	257	295	745	880
380	**SBDD 3080**	23080 CCK/W33	OH 3080 H	PSBD 380	320	142	202	167	180	650	720
	SBDD 3180	23180 CAK/W33	OH 3180 H	PSBD 380	400	197	262	247	235	710	845
	SBDD 3280	23280 CAK/W33	OH 3280 H	PSBD 380	450	242	307	257	300	790	905
400	**SBDD 3084**	23084 CAK/W33	OH 3084 H	PSBD 400	340	147	202	167	180	670	750
	SBDD 3184	23184 CKJ/W33	OH 3184 H	PSBD 400	420	212	289	257	260	760	900
	SBDD 3284	23284 CAK/W33	OH 3284 H	PSBD 400	470	252	317	267	315	835	955

[1] Only typical bearings are listed. Other bearing variants can also fit the housing.
[2] Only typical adapter sleeves are listed. Other variants can also fit the housing.

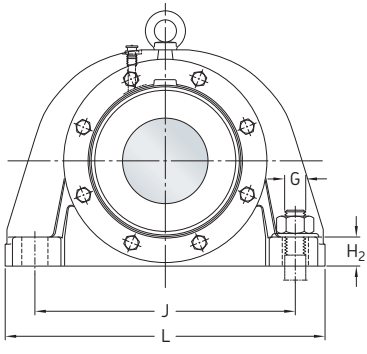

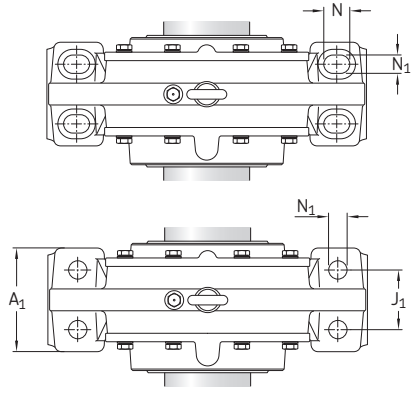

Shaft diam.	**Dimensions** Housing										**Eye bolt** acc. to DIN 580	**Dimensions** Other		**Mass** Housing type	
d_a	H_1	H_2	J	J_1	L	N	N_1	s	G	G_1	G_2	B_a	s_1	A	B
mm	mm										–	mm		kg	
260	260	80	630	140	760	–	42	5	36	M 16	M 20	96	14	177	190
	290	90	750	140	900	65	42	5	36	M 24	M 24	120	35	325	350
	315	95	770	170	900	–	42	5	36	M 20	M 24	115	18	330	350
	320	100	840	170	1 000	65	42	5	36	M 24	M 30	135	16	490	530
280	285	85	690	150	820	–	42	5	36	M 20	M 24	105	15	215	230
	320	100	840	170	1 000	65	42	5	36	M 24	M 30	125	32	400	430
	330	100	820	180	960	–	42	5	36	M 20	M 24	120	17	400	430
	350	105	920	180	1 100	75	56	6	48	M 24	M 30	142	33	590	640
300	295	90	730	160	860	–	42	5	36	M 20	M 24	108	15	240	255
	350	100	940	160	1 150	65	42	5	36	M 24	M 30	135	40	490	530
	360	110	900	200	1 060	–	56	5	48	M 24	M 30	125	26	485	520
	370	115	960	200	1 150	75	56	6	48	M 24	M 30	152	21	700	760
320	315	95	770	170	900	–	42	6	36	M 20	M 24	120	13	280	305
	370	115	960	200	1 150	75	56	6	48	M 24	M 30	155	70	590	630
	390	125	980	200	1 200	75	60	6	56	M 24	M 36	175	47	830	900
340	330	100	820	180	960	–	42	6	36	M 20	M 24	120	17	315	340
	380	115	1 000	200	1 200	75	56	6	48	M 24	M 30	160	67	660	700
	410	130	1 040	210	1 280	80	68	7	64	M 24	M 36	180	51	950	1 020
360	340	105	840	190	1 000	–	56	6	48	M 20	M 24	124	17	350	380
	390	125	1 000	200	1 200	75	60	6	56	M 30	M 30	165	73	730	770
	425	135	1 100	225	1 350	85	68	7	64	M 30	M 36	186	55	1 060	1 140
380	360	110	900	200	1 060	–	56	6	48	M 24	M 30	134	17	420	450
	410	130	1 040	210	1 280	80	68	7	64	M 30	M 36	170	61	820	870
	450	145	1 160	240	1 430	85	68	7	64	M 30	M 36	196	45	1 240	1 330
400	375	115	940	210	1 100	–	56	6	48	M 24	M 30	135	16	465	500
	450	135	1 100	210	1 350	85	68	7	64	M 30	M 36	190	51	1 000	1 070
	470	150	1 220	255	1 500	90	72	8	64	M 30	M 36	212	39	1 500	1 600

10.2 SBD plummer block housings for bearings on an adapter sleeve and a stepped shaft

d_a **90 – 150** mm

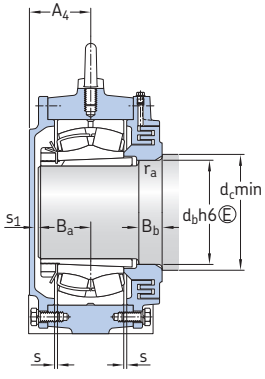

Type AL
Non-locating bearing
Housing for shaft end

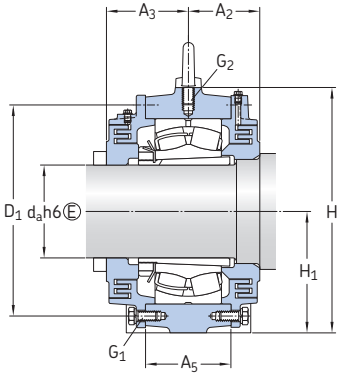

Type BF
Locating bearing
Housing for through shaft

Shaft diam.	Housing	Appropriate parts Bearing[1]	Adapter sleeve[2]	Dimensions Housing									
d_a				A_1	A_2	A_3	A_4	A_5	D_1	H	H_1	H_2	J
mm	–	–		mm									
90	**SBDD 2220 C**	22220 EK	H 320	110	70	85	63	56	195	230	115	35	300
100	**SBDD 3122 C**	23122 CCK/W33	H 3122	150	81	102	83	80	215	270	130	40	300
	SBDD 2222 C	22222 EK	H 322	120	78	90	68	64	215	260	130	38	340
	SBDD 3222 C	23222 CCK/W33	H 2322	130	91	103	76	90	230	285	140	42	350
110	**SBDD 3024 C**	23024 CCK/W33	H 3024	110	63	83	63	56	195	230	115	35	300
	SBDD 3124 C	23124 CCK/W33	H 3124	140	76	93	78	85	230	285	140	40	330
	SBDD 2224 C	22224 EK	H 3124	130	80,5	95,5	68	70	230	275	140	40	360
	SBDD 3224 C	23224 CCK/W33	H 2324	140	93	108	78	95	245	305	150	42	370
115	**SBDD 3026 C**	23026 CCK/W33	H 3026	120	68	88	68	64	215	260	130	38	340
	SBDD 3126 C	23126 CCK/W33	H 3126	140	80	100	80	90	240	295	145	40	350
	SBDD 2226 C	22226 EK	H 3126	140	88	98	70	70	245	290	145	42	370
	SBDD 3226 C	23226 CCK/W33	H 2326	150	103	108	78	100	260	325	160	45	400
125	**SBDD 3028 C**	23028 CCK/W33	H 3028	130	68	88	68	70	230	275	140	40	360
	SBDD 3128 C	23128 CCK/W33	H 3128	150	85	110	85	95	260	315	155	45	380
	SBDD 2228 C	22228 CCK/W33	H 3128	160	94	104	83	82	275	330	165	50	420
	SBDD 3228 C	23228 CCK/W33	H 2328	160	108	118	88	110	285	350	170	50	430
135	**SBDD 3030 C**	23030 CCK/W33	H 3030	140	73	94	70	76	245	290	145	42	370
	SBDD 3130 C	23130 CCK/W33	H 3130	200	93	113	93	102	285	345	170	60	450
	SBDD 2230 C	22230 CCK/W33	H 3130	170	98	108	88	90	300	360	180	52	450
	SBDD 3230 C	23230 CCK/W33	H 2330	170	113	123	93	120	305	375	180	54	450
140	**SBDD 3032 C**	23032 CCK/W33	H 3032	150	78	98	76	76	260	310	155	45	390
	SBDD 3132 C	23132 CCK/W33	H 3132	200	98	123	98	110	310	368	180	55	430
	SBDD 2232 C	22232 CCK/W33	H 3132	180	101	116	88	96	315	370	185	55	480
	SBDD 3232 C	23232 CCK/W33	H 2332	180	118	133	98	130	330	395	190	58	490
150	**SBDD 3034 C**	23034 CCK/W33	H 3034	160	78	103	83	82	280	330	165	50	420
	SBDD 3134 C	23134 CCK/W33	H 3134	200	113	136	112	120	330	395	190	60	470
	SBDD 2234 C	22234 CCK/W33	H 3134	190	112,5	127,5	97	104	335	400	200	60	510
	SBDD 3234 C	23234 CCK/W33	H 2334	200	128	143	103	135	345	410	200	62	525

[1] Only typical bearings are listed. Other bearing variants can also fit the housing.
[2] Only typical adapter sleeves are listed. Other variants can also fit the housing.

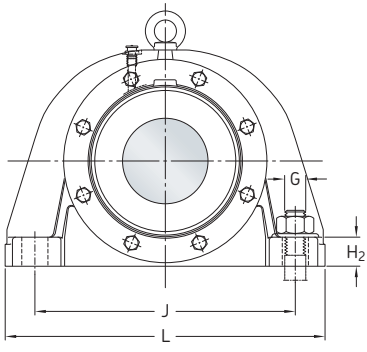

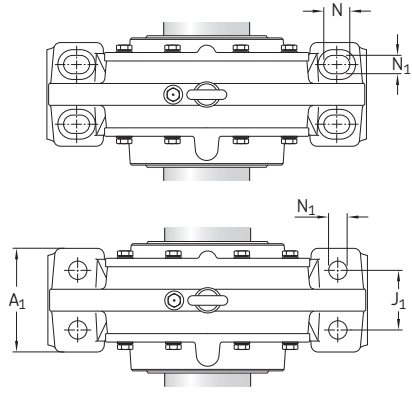

Shaft diam.	Dimensions Housing							Eye bolt acc. to DIN 580	Dimensions Shaft abutment and fillet						Mass Housing type	
d_a	J_1	L	N	N_1	s	G	G_1	G_2	B_a	B_b	d_b	d_c min	r_a	s_1	A	B
mm	mm							–	mm						kg	
90	60	370	–	24	2	20	M 8	M 12	45	35	102	115	4	11	23	25
100	80	400	35	25	2	20	M 12	M 12	52	30	112	125	4	25	40	45
	60	410	–	24	2	20	M 8	M 12	50	35	112	125	4	11	37	40
	70	440	35	30	2	24	M 12	M 16	60	32	112	125	4	9	46	50
110	60	370	–	24	2	20	M 8	M 12	48	25	122	135	4	8	19	20
	80	410	35	25	2	20	M 12	M 12	56	30	122	135	4	13	45	50
	70	430	–	28	3	24	M 8	M 12	55	35	122	135	4	6	43	46
	75	470	35	30	2	24	M 12	M 16	64	32	122	135	4	7	50	55
115	60	410	–	24	2	20	M 8	M 12	52	25	132	150	6	9	28	30
	80	430	35	25	2	20	M 12	M 12	58	30	132	150	6	15	50	55
	80	455	–	28	3	24	M 10	M 12	57	40	132	150	6	5	52	56
	85	500	40	30	2	24	M 12	M 16	66	35	132	150	6	5	60	65
125	70	430	–	28	3	24	M 8	M 12	54	25	142	160	6	7	32	35
	85	470	35	25	2	24	M 12	M 12	62	30	142	160	6	16	58	65
	95	510	–	35	3	30	M 10	M 12	62	40	142	160	6	13	65	70
	85	530	40	30	3	24	M 16	M 20	72	35	142	160	6	9	74	80
135	80	455	–	28	3	24	M 10	M 12	56	25	152	170	6	6	37	40
	110	580	45	35	3	24	M 12	M 16	70	30	152	170	6	15	78	85
	100	540	–	35	3	30	M 12	M 16	66	40	152	170	6	14	77	82
	90	550	45	35	3	30	M 16	M 20	78	40	152	170	6	7	87	95
140	90	480	–	28	3	24	M 10	M 12	62	30	162	185	8	6	41	45
	110	540	40	30	3	24	M 16	M 12	75	30	162	185	8	15	90	100
	105	570	–	35	3	30	M 16	M 12	72	40	162	185	8	8	90	96
	105	600	45	35	3	30	M 16	M 20	84	40	162	185	8	6	100	110
150	95	510	–	35	4	30	M 10	M 12	66	30	172	195	8	9	50	55
	110	570	45	35	3	30	M 12	M 20	78	40	172	195	8	26	100	110
	110	600	–	35	4	30	M 12	M 16	75	45	172	195	8	14	103	110
	110	640	45	35	3	30	M 16	M 20	88	40	172	195	8	7	130	140

10.2 SBD plummer block housings for bearings on an adapter sleeve and a stepped shaft

d_a **160 – 260** mm

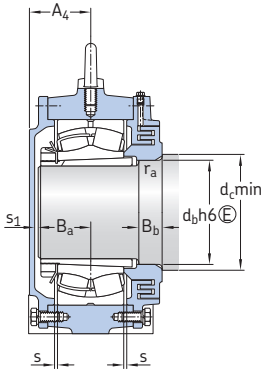

Type AL
Non-locating bearing
Housing for shaft end

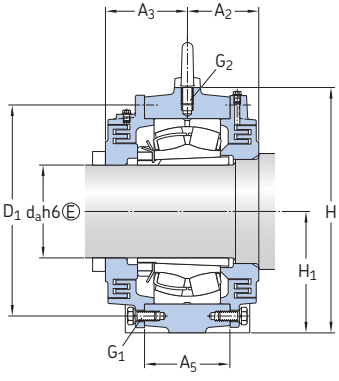

Type BF
Locating bearing
Housing for through shaft

Shaft diam.	Housing	Appropriate parts Bearing[1]	Adapter sleeve[2]	Dimensions Housing									
d_a				A_1	A_2	A_3	A_4	A_5	D_1	H	H_1	H_2	J
mm	–	–		mm									
160	**SBDD 3036 C**	23036 CCK/W33	H 3036	170	83	108	88	90	305	360	180	52	450
	SBDD 3136 C	23136 CCK/W33	H 3136	200	118	138	116	125	350	410	200	60	490
	SBDD 2236 C	22236 CCK/W33	H 3136	200	118	133	102	110	360	430	215	65	540
	SBDD 3236 C	23236 CCK/W33	H 2336	210	133	148	108	140	360	430	210	65	550
170	**SBDD 3038 C**	23038 CCK/W33	H 3038	180	93	118	88	96	315	370	185	55	480
	SBDD 3138 C	23138 CCK/W33	H 3138	210	123	143	120	130	370	435	210	65	550
	SBDD 2238 C	22238 CCK/W33	H 3138	200	118	133	102	110	370	430	215	65	540
	SBDD 3238 C	23238 CCK/W33	H 2338	220	138	153	113	150	385	455	220	75	560
180	**SBDD 3040 C**	23040 CCK/W33	H 3040	190	97	122	97	104	340	400	200	60	510
	SBDD 3140 C	23140 CCK/W33	H 3140	220	127	147	127	135	380	455	220	85	560
	SBDD 2240 C	22240 CCK/W33	H 3140	210	122	134,5	107	118	390	450	225	70	560
	SBDD 3240 C	23240 CCK/W33	H 2340	240	138	158	118	165	405	475	235	75	640
200	**SBDD 3044 C**	23044 CCK/W33	OH 3044 HB	200	102	137	102	110	370	430	215	65	540
	SBDD 3144 C	23144 CCK/W33	OH 3144 HB	230	135	160	135	150	420	485	235	75	640
	SBDD 2244 C	22244 CCK/W33	OH 3144 HB	220	124,5	159,5	117	128	435	500	250	75	600
	SBDD 3244 C	23244 CCK/W33	OH 2344 HB	250	148	183	133	175	445	525	260	80	700
220	**SBDD 3048 C**	23048 CCK/W33	OH 3048 HB	210	102	142	107	118	390	450	225	70	560
	SBDD 3148 C	23148 CCK/W33	OH 3148 HB	250	152	182	142	160	455	550	270	80	720
	SBDD 2248 C	22248 CCK/W33	OH 3148 HB	250	130	165	132	144	490	570	285	85	690
	SBDD 3248 C	23248 CCK/W33	OH 2348 HB	250	148	188	148	190	490	590	290	90	750
240	**SBDD 3052 C**	23052 CCK/W33	OH 3052 HB	220	107	147	117	128	435	500	250	75	600
	SBDD 3152 C	23152 CCK/W33	OH 3152 HB	250	152	187	152	175	490	590	290	90	750
	SBDD 2252 C	22252 CCK/W33	OH 3152 HB	260	145	182,5	137	154	520	590	295	90	730
	SBDD 3252 C	23252 CCK/W33	OH 2352 HB	290	167	208	158	205	535	625	310	95	800
260	**SBDD 3056 C**	23056 CCK/W33	OH 3056 HB	240	117	157	122	128	455	520	260	80	630
	SBDD 3156 C	23156 CCK/W33	OH 3156 HB	250	157	197	165	175	510	590	290	90	750
	SBDD 2256 C	22256 CCK/W33	OH 3156 HB	270	152	192	147	158	555	630	315	95	770
	SBDD 3256 C	23256 CCK/W33	OH 2356 HB	300	178	218	163	210	555	645	320	100	840

[1] Only typical bearings are listed. Other bearing variants can also fit the housing.
[2] Only typical adapter sleeves are listed. Other variants can also fit the housing.

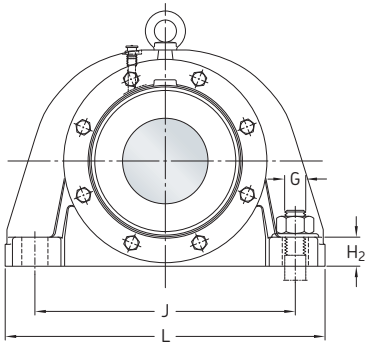

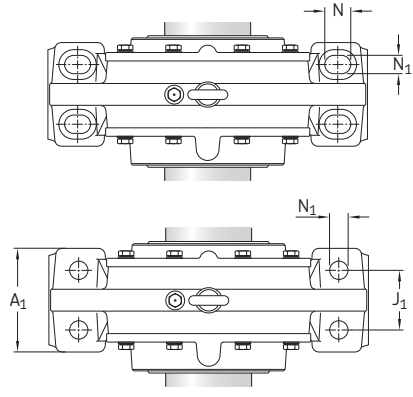

Shaft diam.	**Dimensions** Housing							**Eye bolt** acc. to DIN 580	**Dimensions** Shaft abutment and fillet						**Mass** Housing type	
d_a	J_1	L	N	N_1	s	G	G_1	G_2	B_a	B_b	d_b	d_c min	r_a	s_1	A	B
mm	mm							–	mm						kg	
160	100	540	–	35	3	30	M 12	M 16	70	30	182	205	8	10	64	70
	105	600	45	35	3	30	M 16	M 20	82	40	182	205	8	26	118	130
	115	640	–	42	4	36	M 16	M 20	78	45	182	205	8	14	112	120
	120	680	45	35	3	30	M 16	M 20	90	45	182	205	8	10	147	160
170	105	570	–	35	3	30	M 12	M 16	72	30	192	215	8	8	74	80
	120	680	45	35	3	36	M 16	M 20	88	40	192	215	8	22	146	160
	115	640	–	42	4	36	M 16	M 20	82	45	192	215	8	10	126	135
	120	710	45	35	4	30	M 16	M 20	95	45	192	215	8	10	170	185
180	110	600	–	35	4	30	M 12	M 16	78	35	202	225	8	11	83	90
	120	710	52	42	3	36	M 16	M 24	95	40	202	225	8	22	175	190
	120	680	–	42	4	36	M 16	M 20	85	45	202	225	8	12	145	155
	140	780	52	42	4	36	M 16	M 24	100	45	202	225	8	10	200	220
200	115	640	–	42	4	36	M 16	M 20	80	35	222	245	8	12	107	115
	140	780	52	42	4	36	M 16	M 24	100	45	222	245	8	25	205	220
	130	720	–	42	4	36	M 16	M 20	95	45	222	245	8	10	187	200
	140	850	52	42	4	36	M 20	M 24	112	45	222	245	8	11	270	290
220	120	680	–	42	4	36	M 16	M 20	85	35	242	265	8	12	120	130
	140	890	52	42	4	36	M 20	M 24	106	50	242	265	8	26	250	270
	150	820	–	42	5	36	M 20	M 24	105	45	242	265	8	15	235	250
	140	900	52	42	5	36	M 20	M 24	122	45	242	265	8	16	345	370
240	130	720	–	42	4	36	M 16	M 20	92	35	262	285	8	13	153	165
	140	900	52	42	4	36	M 20	M 24	118	50	262	285	8	24	300	320
	160	860	–	42	5	36	M 20	M 24	110	50	262	285	8	13	290	310
	160	960	65	42	5	36	M 20	M 24	132	45	262	285	8	16	435	470
260	140	760	–	42	5	36	M 16	M 20	96	35	282	305	8	14	177	190
	140	900	65	42	5	36	M 24	M 24	120	50	282	305	8	35	325	350
	170	900	–	42	5	36	M 20	M 24	115	50	282	305	8	18	330	350
	170	1 000	65	42	5	36	M 24	M 30	135	50	282	305	8	16	490	530

10.2 SBD plummer block housings for bearings on an adapter sleeve and a stepped shaft

d_a **280 – 400** mm

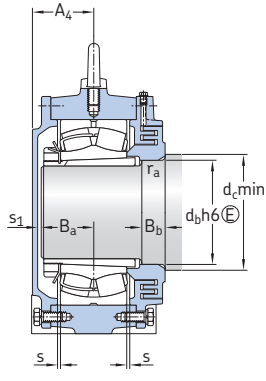

Type AL
Non-locating bearing
Housing for shaft end

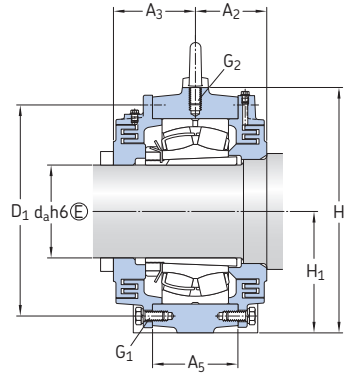

Type BF
Locating bearing
Housing for through shaft

Shaft diam.	Housing	Appropriate parts Bearing[1]	Adapter sleeve[2]	Dimensions Housing									
d_a				A_1	A_2	A_3	A_4	A_5	D_1	H	H_1	H_2	J
mm	–	–		mm									
280	**SBDD 3060 C**	23060 CCK/W33	OH 3060 HB	250	122	167	132	144	500	570	285	85	690
	SBDD 3160 C	23160 CCK/W33	OH 3160 HB	300	162	207	167	190	550	655	320	100	840
	SBDD 2260 C	22260 CCK/W33	OH 3160 HB	280	160	191	152	168	585	660	330	100	820
	SBDD 3260 C	23260 CCK/W33	OH 2360 HB	330	182	222	187	230	600	705	350	105	920
300	**SBDD 3064 C**	23064 CCK/W33	OH 3064 HB	260	122	172	137	154	520	590	295	90	730
	SBDD 3164 C	23164 CCK/W33	OH 3164 HB	300	177	212	187	210	590	702	350	100	940
	SBDD 2264 C	22264 CCK/W33	OH 3164 HB	320	175	202	167	180	640	720	360	110	900
	SBDD 3264 C	23264 CCK/W33	OH 2364 HB	360	192	237	187	250	640	760	370	115	960
320	**SBDD 3068 C**	23068 CCK/W33	OH 3068 HB	270	132	177	147	158	565	630	315	95	770
	SBDD 3168 C	23168 CCK/W33	OH 3168 HB	360	197	242	237	220	630	735	370	115	960
	SBDD 3268 C	23268 CAK/W33	OH 3268 HB	380	202	272	237	265	680	810	390	125	980
340	**SBDD 3072 C**	23072 CCK/W33	OH 3072 HB	280	132	182	152	168	585	660	330	100	820
	SBDD 3172 C	23172 CCK/W33	OH 3172 HB	370	197	247	243	225	650	760	380	115	1 000
	SBDD 3272 C	23272 CAK/W33	OH 3272 HB	400	227	282	247	275	710	825	410	130	1 040
360	**SBDD 3076 C**	23076 CCK/W33	OH 3076 HB	300	137	187	157	168	605	680	340	105	840
	SBDD 3176 C	23176 CAK/W33	OH 3176 HB	380	202	257	254	230	680	790	390	125	1 000
	SBDD 3276 C	23276 CAK/W33	OH 3276 HB	405	232	297	257	295	745	880	425	135	1 100
380	**SBDD 3080 C**	23080 CCK/W33	OH 3080 HB	320	142	202	167	180	650	720	360	110	900
	SBDD 3180 C	23180 CAK/W33	OH 3180 HB	400	197	262	247	235	710	845	410	130	1 040
	SBDD 3280 C	23280 CAK/W33	OH 3280 HB	450	242	307	257	300	790	905	450	145	1 160
400	**SBDD 3084 C**	23084 CAK/W33	OH 3084 HB	340	147	202	167	180	670	750	375	115	940
	SBDD 3184 C	23184 CKJ/W33	OH 3184 HB	420	212	289	257	260	760	900	450	135	1 100
	SBDD 3284 C	23284 CAK/W33	OH 3284 HB	470	252	317	267	315	835	955	470	150	1 220

[1] Only typical bearings are listed. Other bearing variants can also fit the housing.
[2] Only typical adapter sleeves are listed. Other variants can also fit the housing.

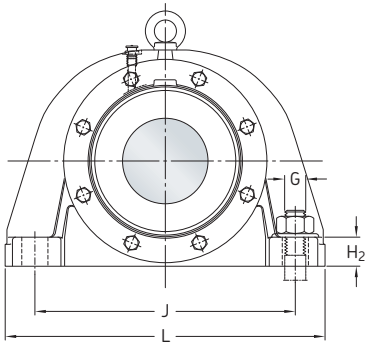

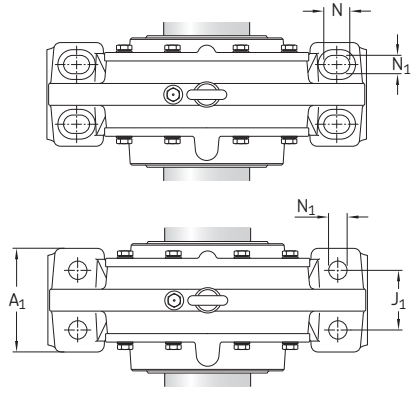

Shaft diam.	Dimensions Housing							Eye bolt acc. to DIN 580	Dimensions Shaft abutment and fillet						Mass Housing type	
d_a	J_1	L	N	N_1	s	G	G_1	G_2	B_a	B_b	d_b	d_c min	r_a	s_1	A	B
mm	mm							–	mm						kg	
280	150	820	–	42	5	36	M 20	M 24	105	35	302	325	8	15	215	230
	170	1 000	65	42	5	36	M 24	M 30	125	50	302	325	8	32	400	430
	180	960	–	42	5	36	M 20	M 24	120	50	302	325	8	17	400	430
	180	1 100	75	56	6	48	M 24	M 30	142	50	302	325	8	33	590	640
300	160	860	–	42	5	36	M 20	M 24	108	35	322	345	8	15	240	255
	160	1 150	65	42	5	36	M 24	M 30	135	50	322	345	8	40	490	530
	200	1 060	–	56	5	48	M 24	M 30	125	55	322	345	8	26	485	520
	200	1 150	75	56	6	48	M 24	M 30	152	50	322	345	8	21	700	760
320	170	900	–	42	6	36	M 20	M 24	120	40	342	365	8	13	280	305
	200	1 150	75	56	6	48	M 24	M 30	155	60	342	365	8	70	590	630
	200	1 200	75	60	6	56	M 24	M 36	175	50	342	365	8	47	830	900
340	180	960	–	42	6	36	M 20	M 24	120	40	362	385	8	17	315	340
	200	1 200	75	56	6	48	M 24	M 30	160	60	362	385	8	67	660	700
	210	1 280	80	68	7	64	M 24	M 36	180	70	362	385	8	51	950	1 020
360	190	1 000	–	56	6	48	M 20	M 24	124	40	382	405	8	17	350	380
	200	1 200	75	60	6	56	M 30	M 30	165	60	382	405	8	73	730	770
	225	1 350	85	68	7	64	M 30	M 36	186	70	382	405	8	55	1 060	1 140
380	200	1 060	–	56	6	48	M 24	M 30	134	40	402	425	8	17	420	450
	210	1 280	80	68	7	64	M 30	M 36	170	60	402	425	8	61	820	870
	240	1 430	85	68	7	64	M 30	M 36	196	70	402	425	8	45	1 240	1 330
400	210	1 100	–	56	6	48	M 24	M 30	135	40	422	445	8	16	465	500
	210	1 350	85	68	7	64	M 30	M 36	190	60	422	445	8	51	1 000	1 070
	255	1 500	90	72	8	64	M 30	M 36	212	70	422	445	8	39	1 500	1 600

10.3 SBD plummer block housings for bearings on a cylindrical seat and a stepped shaft

d_a **100 – 170** mm

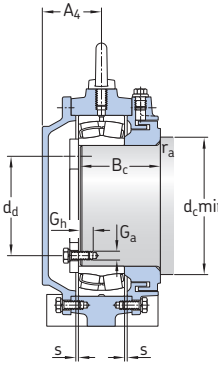

Type AL
Non-locating bearing
Housing for shaft end

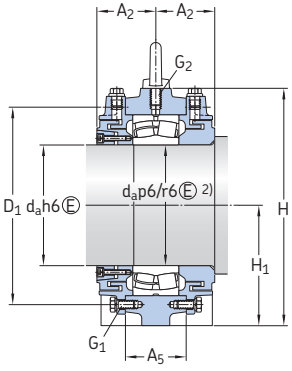

Type BF
Locating bearing
Housing for through shaft

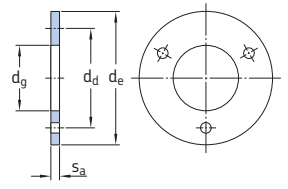

Shaft diam.	Housing	Appropriate parts		Dimensions										
		Bearing[1]	Adapter ring (included)	Housing										
d_a				A_1	A_2	A_4	A_5	D_1	H	H_1	H_2	J	J_1	L
mm	–	–		mm										
100	**SBDD 2220 E**	22220 E	PSBD 100	110	70	63	56	195	230	115	35	300	60	370
110	**SBDD 3122 E**	23122 CC/W33	PSBD 110	150	81	83	80	215	270	130	40	300	80	400
	SBDD 2222 E	22222 E	PSBD 110	120	78	68	64	215	260	130	38	340	60	410
	SBDD 3222 E	23222 CC/W33	PSBD 110	130	91	76	90	230	285	140	42	350	70	440
120	**SBDD 3024 E**	23024 CC/W33	PSBD 120	110	63	63	56	195	230	115	35	300	60	370
	SBDD 3124 E	23124 CC/W33	PSBD 120	140	76	78	85	230	285	140	40	330	80	410
	SBDD 2224 E	22224 E	PSBD 120	130	80,5	68	70	230	275	140	40	360	70	430
	SBDD 3224 E	23224 CC/W33	PSBD 120	140	93	78	95	245	305	150	42	370	75	470
130	**SBDD 3026 E**	23026 CC/W33	PSBD 130	120	68	68	64	215	260	130	38	340	60	410
	SBDD 3126 E	23126 CC/W33	PSBD 130	140	80	80	90	240	295	145	40	350	80	430
	SBDD 2226 E	22226 E	PSBD 130	140	88	70	70	245	290	145	42	370	80	455
	SBDD 3226 E	23226 CC/W33	PSBD 130	150	103	78	100	260	325	160	45	400	85	500
140	**SBDD 3028 E**	23028 CC/W33	PSBD 140	130	68	68	70	230	275	140	40	360	70	430
	SBDD 3128 E	23128 CC/W33	PSBD 140	150	85	85	95	260	315	155	45	380	85	470
	SBDD 2228 E	22228 CC/W33	PSBD 140	160	94	83	82	275	330	165	50	420	95	510
	SBDD 3228 E	23228 CC/W33	PSBD 140	160	108	88	110	285	350	170	50	430	85	530
150	**SBDD 3030 E**	23030 CC/W33	PSBD 150	140	78	70	76	245	290	145	42	370	90	455
	SBDD 3130 E	23130 CC/W33	PSBD 150	200	93	93	102	285	345	170	60	450	110	580
	SBDD 2230 E	22230 CC/W33	PSBD 150	170	98	88	90	300	360	180	52	450	100	540
	SBDD 3230 E	23230 CC/W33	PSBD 150	170	113	93	120	305	375	180	54	450	90	550
160	**SBDD 3032 E**	23032 CC/W33	PSBD 160	150	78	76	76	260	310	155	45	390	90	480
	SBDD 3132 E	23132 CC/W33	PSBD 160	200	98	98	110	310	368	180	55	430	110	540
	SBDD 2232 E	22232 CC/W33	PSBD 160	180	101	88	96	315	370	185	55	480	105	570
	SBDD 3232 E	23232 CC/W33	PSBD 160	180	118	98	130	330	395	190	58	490	105	600
170	**SBDD 3034 E**	23034 CC/W33	PSBD 170	160	78	83	82	280	330	165	50	420	95	510
	SBDD 3134 E	23134 CC/W33	PSBD 170	200	113	112	120	330	395	190	60	470	110	570
	SBDD 2234 E	22234 CC/W33	PSBD 170	190	112,5	97	104	335	400	200	60	510	110	600
	SBDD 3234 E	23234 CC/W33	PSBD 170	200	128	103	135	345	410	200	62	525	110	640

[1] Only typical bearings are listed. Other bearing variants can also fit the housing.
[2] Tolerance p6 for shaft diameters up to 140 mm and tolerance r6 for larger sizes.

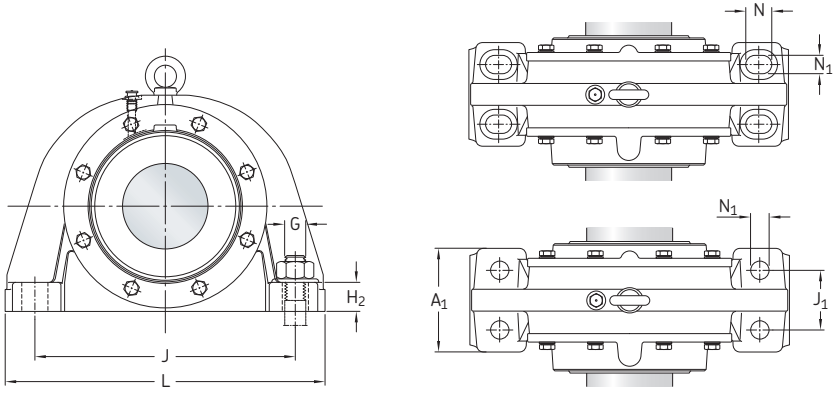

Shaft diam.	Dimensions Housing					Eye bolt acc. to DIN 580	Dimensions Shaft abutment and fillet					End plate				attachment bolts (for end plate)	Mass Housing type	
d_a	N	N_1	s	G	G_1	G_2	B_c	d_c min	r_a	G_a	G_h	d_d	d_e	d_{gmax}	s_a		A	B
mm	mm					–	mm										kg	
100	–	24	2	20	M 8	M 12	90	115	4	M 10	18	75	115	35	10	M 10×30	23	25
110	35	25	2	20	M 12	M 12	107	125	4	M 8	15	90	122	58	8	M 8×25	40	45
	–	24	2	20	M 8	M 12	102	125	4	M 10	18	85	128	42	10	M 10×30	37	40
	35	30	2	24	M 12	M 16	123	125	4	M 8	15	90	128	45	8	M 8×25	46	50
120	–	24	2	20	M 8	M 12	84	135	4	M 10	18	95	132	58	10	M 10×30	19	20
	35	25	3	20	M 12	M 12	105	135	4	M 8	15	100	133	67	8	M 8×25	45	50
	–	28	3	24	M 8	M 12	107	135	4	M 10	18	95	138	52	10	M 10×30	43	46
	35	30	2	24	M 12	M 16	128	135	4	M 10	18	95	138	45	10	M 10×30	50	55
130	–	24	2	20	M 8	M 12	92	150	6	M 10	18	105	145	65	10	M 10×30	28	30
	35	25	2	20	M 12	M 12	110	150	6	M 8	15	110	145	75	8	M 8×25	50	55
	–	28	3	24	M 10	M 12	117	150	6	M 10	18	105	150	60	10	M 10×30	52	56
	40	30	2	24	M 12	M 16	140	150	6	M 10	18	105	150	55	10	M 10×30	60	65
140	–	28	3	24	M 8	M 12	92	160	6	M 10	18	115	155	75	10	M 10×30	32	35
	35	25	2	20	M 12	M 12	116	160	6	M 10	18	115	155	75	10	M 10×30	58	65
	–	35	3	30	M 10	M 12	125	160	6	M 10	18	115	162	68	10	M 10×30	65	70
	40	30	3	24	M 16	M 20	145	160	6	M 10	18	115	160	60	10	M 10×30	74	80
150	–	28	3	24	M 10	M 12	104	170	6	M 10	18	125	165	85	10	M 10×30	37	40
	45	35	3	24	M 12	M 16	130	170	6	M 10	18	125	165	85	10	M 10×30	78	85
	–	35	3	30	M 12	M 16	132	170	6	M 10	18	125	175	75	10	M 10×30	77	82
	45	35	3	30	M 16	M 20	158	170	6	M 10	18	125	170	85	10	M 10×30	87	95
160	–	28	3	24	M 10	M 12	105	185	8	M 10	18	135	175	95	10	M 10×30	41	45
	40	30	3	24	M 12	M 16	138	185	8	M 10	18	135	175	95	10	M 10×30	90	100
	–	35	3	30	M 12	M 16	138	185	8	M 12	20	130	185	75	12	M 12×30	90	96
	45	35	3	30	M 16	M 20	167	185	8	M 12	20	130	185	70	12	M 12×30	100	110
170	–	35	3	30	M 10	M 12	109	195	8	M 10	18	145	185	105	10	M 10×30	50	55
	45	35	3	30	M 12	M 20	154	195	8	M 10	18	145	185	105	10	M 10×30	100	110
	–	35	4	30	M 12	M 16	152	195	8	M 16	25	130	200	60	16	M 16×45	103	110
	45	35	3	30	M 16	M 20	179	195	8	M 12	20	140	195	75	12	M 12×30	130	140

10.3 SBD plummer block housings for bearings on a cylindrical seat and a stepped shaft

d_a **180 – 280** mm

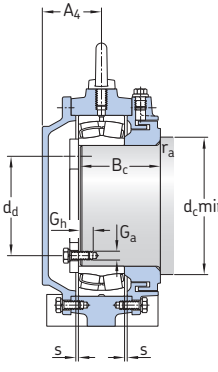

Type AL
Non-locating bearing
Housing for shaft end

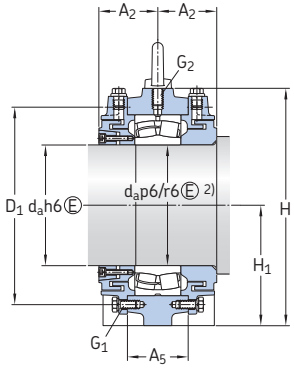

Type BF
Locating bearing
Housing for through shaft

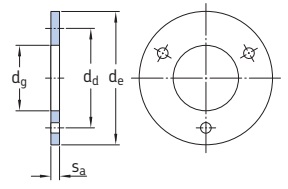

Shaft diam.	Housing	Appropriate parts		Dimensions										
		Bearing[1]	Adapter ring (included)	Housing										
d_a				A_1	A_2	A_4	A_5	D_1	H	H_1	H_2	J	J_1	L
mm	–	–		mm										
180	**SBDD 3036 E**	23036 CC/W33	PSBD 180	170	88	88	90	305	360	180	52	450	100	540
	SBDD 3136 E	23136 CC/W33	PSBD 180	200	118	116	125	350	410	200	60	490	105	600
	SBDD 2236 E	22236 CC/W33	PSBD 180	200	118	102	110	360	430	215	65	540	115	640
	SBDD 3236 E	23236 CC/W33	PSBD 180	210	133	108	140	360	430	210	65	550	120	680
190	**SBDD 3038 E**	23038 CC/W33	PSBD 190	180	93	88	96	315	370	185	55	480	105	570
	SBDD 3138 E	23138 CC/W33	PSBD 190	210	123	120	130	370	435	210	65	550	120	680
	SBDD 2238 E	22238 CC/W33	PSBD 190	200	118	102	110	370	430	215	65	540	115	640
	SBDD 3238 E	23238 CC/W33	PSBD 190	220	138	113	150	385	455	220	75	560	120	710
200	**SBDD 3040 E**	23040 CC/W33	PSBD 200	190	97	97	104	340	400	200	60	510	110	600
	SBDD 3140 E	23140 CC/W33	PSBD 200	220	127	127	135	380	455	220	85	560	120	710
	SBDD 2240 E	22240 CC/W33	PSBD 200	210	122	107	118	390	450	225	70	560	120	680
	SBDD 3240 E	23240 CC/W33	PSBD 200	240	138	118	165	405	475	235	75	640	140	780
220	**SBDD 3044 E**	23044 CC/W33	PSBD 220	200	102	102	110	370	430	215	65	540	115	640
	SBDD 3144 E	23144 CC/W33	PSBD 220	230	135	135	150	420	485	235	75	640	140	780
	SBDD 2244 E	22244 CC/W33	PSBD 220	220	124,5	117	128	435	500	250	75	600	130	720
	SBDD 3244 E	23244 CC/W33	PSBD 220	250	148	133	175	445	525	260	80	700	140	850
240	**SBDD 3048 E**	23048 CC/W33	PSBD 240	210	102	107	118	290	450	225	70	560	120	680
	SBDD 3148 E	23148 CC/W33	PSBD 240	250	152	142	160	455	550	270	80	720	140	890
	SBDD 2248 E	22248 CC/W33	PSBD 240	250	130	132	144	490	570	285	85	690	150	820
	SBDD 3248 E	23248 CC/W33	PSBD 240	250	148	148	190	490	590	290	90	750	140	900
260	**SBDD 3052 E**	23052 CC/W33	PSBD 260	220	107	117	128	435	500	250	75	600	130	720
	SBDD 3152 E	23152 CC/W33	PSBD 260	250	152	152	175	490	590	290	90	750	140	900
	SBDD 2252 E	22252 CC/W33	PSBD 260	260	145	137	154	520	590	295	90	730	160	860
	SBDD 3252 E	23252 CC/W33	PSBD 260	290	167	158	205	535	625	310	95	800	160	960
280	**SBDD 3056 E**	23056 CC/W33	PSBD 280	240	117	122	128	455	520	260	80	630	140	760
	SBDD 3156 E	23156 CC/W33	PSBD 280	250	157	165	175	510	590	290	90	750	140	900
	SBDD 2256 E	22256 CC/W33	PSBD 280	270	152	147	158	555	630	315	95	770	170	900
	SBDD 3256 E	23256 CC/W33	PSBD 280	300	178	163	210	555	645	320	100	840	170	1 000

[1] Only typical bearings are listed. Other bearing variants can also fit the housing.

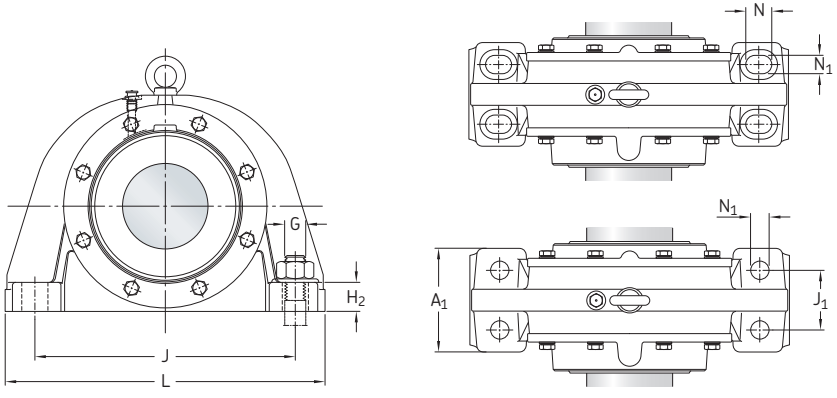

Shaft diam.	Dimensions Housing					Eye bolt acc. to DIN 580	Dimensions Shaft abutment and fillet					End plate				attachment bolts (for end plate)	Mass Housing type	
d_a	N	N_1	s	G	G_1	G_2	B_c	d_c min	r_a	G_a	G_h	d_d	d_e	d_{gmax}	s_a		A	B
mm	mm					–	mm										kg	
180	–	35	3	30	M 12	M 16	122	205	8	M 10	18	155	195	115	10	M 10×30	64	70
	45	35	3	30	M 16	M 20	163	205	8	M 12	20	150	195	105	12	M 12×30	118	130
	–	42	4	36	M 16	M 20	157	205	8	M 16	25	140	210	70	16	M 16×45	112	120
	45	35	3	30	M 16	M 20	185	205	8	M 12	20	150	205	85	12	M 12×30	147	160
190	–	35	3	30	M 12	M 16	128	215	8	M 12	20	160	205	115	12	M 12×30	74	80
	45	35	3	36	M 16	M 20	172	215	8	M 12	20	160	210	110	12	M 12×30	146	160
	–	42	4	36	M 16	M 20	160	215	8	M 16	25	150	220	80	16	M 16×45	126	135
	45	35	4	30	M 16	M 20	197	215	8	M 12	20	160	215	95	12	M 12×30	170	185
200	–	35	4	30	M 12	M 16	135	225	8	M 16	25	160	215	105	16	M 16×45	83	90
	52	42	3	36	M 16	M 24	180	225	8	M 12	20	170	220	120	12	M 12×30	175	190
	–	42	4	36	M 16	M 20	167	225	8	M 20	30	150	235	65	20	M 20×55	145	155
	52	42	4	36	M 16	M 24	198	225	8	M 16	25	160	230	80	16	M 16×45	200	220
220	–	42	4	36	M 16	M 20	144	245	8	M 16	25	180	240	120	16	M 16×45	107	115
	52	42	4	36	M 16	M 24	191	245	8	M 16	25	180	245	115	16	M 16×45	205	220
	–	42	4	36	M 16	M 20	175	245	8	M 20	30	170	260	80	20	M 20×55	187	200
	52	42	4	36	M 20	M 24	216	245	8	M 16	25	180	255	95	16	M 16×45	270	290
240	–	42	4	36	M 16	M 20	145	265	8	M 20	30	190	260	120	20	M 20×55	120	130
	52	42	4	36	M 20	M 24	212	265	8	M 16	25	200	265	135	16	M 16×45	250	270
	–	42	5	36	M 20	M 24	186	265	8	M 20	30	190	285	95	20	M 20×55	235	250
	52	42	5	36	M 20	M 24	224	265	8	M 16	25	200	280	110	16	M 16×45	345	370
260	–	42	4	36	M 16	M 20	155	285	8	M 20	30	210	285	135	20	M 20×55	153	165
	52	42	4	36	M 20	M 24	220	285	8	M 16	25	220	285	155	16	M 16×45	300	320
	–	42	5	36	M 20	M 24	205	285	8	M 20	30	210	305	95	20	M 20×55	290	310
	65	42	5	36	M 20	M 24	249	285	8	M 16	25	220	305	115	16	M 16×45	435	470
280	–	42	5	36	M 16	M 20	166	305	8	M 20	30	230	305	155	20	M 20×55	177	190
	65	42	5	36	M 24	M 24	225	305	8	M 16	25	240	305	175	16	M 16×45	325	350
	–	42	5	36	M 20	M 24	212	305	8	M 24	35	220	325	195	24	M 24×65	330	350
	65	42	5	36	M 24	M 30	261	305	8	M 20	30	230	325	80	20	M 20×55	490	530

10.3 SBD plummer block housings for bearings on a cylindrical seat and a stepped shaft
d_a **300 – 420** mm

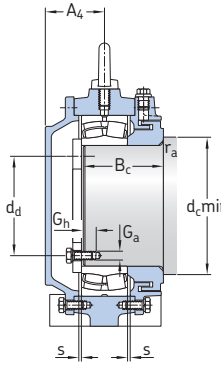

Type AL
Non-locating bearing
Housing for shaft end

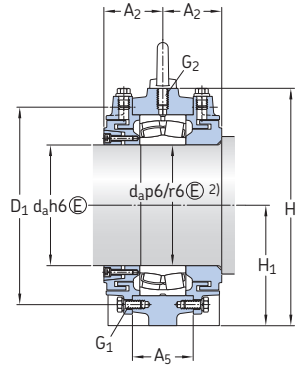

Type BF
Locating bearing
Housing for through shaft

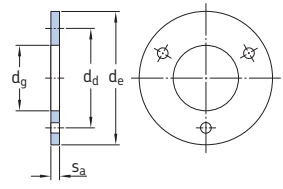

Shaft diam.	Housing	Appropriate parts		Dimensions										
		Bearing[1]	Adapter ring (included)	Housing										
d_a				A_1	A_2	A_4	A_5	D_1	H	H_1	H_2	J	J_1	L
mm	–	–		mm										
300	**SBDD 3060 E**	23060 CC/W33	PSBD 300	250	122	132	144	500	570	285	85	690	150	820
	SBDD 3160 E	23160 CC/W33	PSBD 300	300	162	167	190	550	655	320	100	840	170	1 000
	SBDD 2260 E	22260 CC/W33	PSBD 300	280	160	152	168	585	660	330	100	820	180	960
	SBDD 3260 E	23260 CC/W33	PSBD 300	330	182	187	230	600	705	350	105	920	180	1 100
320	**SBDD 3064 E**	23064 CC/W33	PSBD 320	260	122	137	154	520	590	295	90	730	160	860
	SBDD 3164 E	23164 CC/W33	PSBD 320	300	177	187	210	590	702	350	100	940	160	1 150
	SBDD 2264 E	22264 CC/W33	PSBD 320	320	175	167	180	640	720	360	110	900	200	1 060
	SBDD 3264 E	23264 CC/W33	PSBD 320	360	192	187	250	640	760	370	115	960	200	1 150
340	**SBDD 3068 E**	23068 CC/W33	PSBD 340	270	132	147	158	565	630	315	95	770	170	900
	SBDD 3168 E	23168 CC/W33	PSBD 340	360	197	237	220	630	735	370	115	960	200	1 150
	SBDD 3268 E	23268 CA/W33	PSBD 340	380	202	237	265	680	810	390	125	980	200	1 200
360	**SBDD 3072 E**	23072 CC/W33	PSBD 360	280	132	152	168	585	660	330	100	820	180	960
	SBDD 3172 E	23172 CC/W33	PSBD 360	370	197	243	225	650	760	380	115	1 000	200	1 200
	SBDD 3272 E	23272 CA/W33	PSBD 360	400	227	247	275	710	825	410	130	1 040	210	1 280
380	**SBDD 3076 E**	23076 CC/W33	PSBD 380	300	137	157	168	605	680	340	105	840	190	1 000
	SBDD 3176 E	23176 CA/W33	PSBD 380	380	202	254	230	680	790	390	125	1 000	200	1 200
	SBDD 3276 E	23276 CA/W33	PSBD 380	405	232	257	295	745	880	425	135	1 100	225	1 350
400	**SBDD 3080 E**	23080 CC/W33	PSBD 400	320	142	167	180	650	720	360	110	900	200	1 060
	SBDD 3180 E	23180 CA/W33	PSBD 400	400	197	247	235	710	845	410	130	1 040	210	1 280
	SBDD 3280 E	23280 CA/W33	PSBD 400	450	242	257	300	790	905	450	145	1 160	240	1 430
420	**SBDD 3084 E**	23084 CA/W33	PSBD 420	340	147	167	180	670	750	375	115	940	210	1 100
	SBDD 3184 E	23184 CJ/W33	PSBD 420	420	212	257	260	760	900	450	135	1 100	210	1 350
	SBDD 3284 E	23284 CA/W33	PSBD 420	470	252	267	315	835	955	470	150	1 220	255	1 500

[1] Only typical bearings are listed. Other bearing variants can also fit the housing.

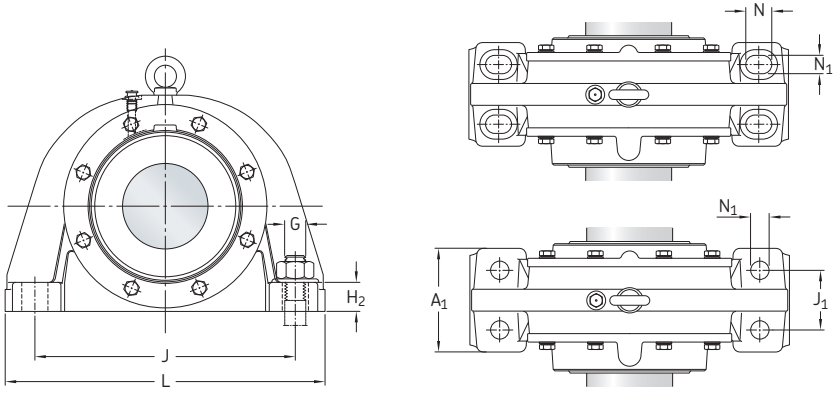

Shaft diam.	Dimensions Housing					Eye bolt acc. to DIN 580	Dimensions Shaft abutment and fillet					End plate					Mass Housing type	
d_a	N	N_1	s	G	G_1	G_2	B_c	d_c min	r_a	G_a	G_h	d_d	d_e	d_{gmax}	s_a	attachment bolts (for end plate)	A	B
mm	mm					–	mm										kg	
300	–	42	5	36	M 20	M 24	177	325	8	M 20	30	250	325	175	20	M 20×55	215	230
	65	42	5	36	M 24	M 30	237	325	8	M 20	30	250	325	175	20	M 20×55	400	430
	–	42	5	36	M 20	M 24	225	325	8	M 24	35	240	350	105	24	M 24×65	400	430
	75	56	6	48	M 24	M 30	273	325	8	M 20	30	250	350	120	20	M 20×55	590	640
320	–	42	5	36	M 20	M 24	179	345	8	M 20	30	270	345	195	20	M 20×55	240	255
	65	42	5	36	M 24	M 30	260	345	8	M 20	30	270	350	190	20	M 20×55	490	530
	–	56	5	48	M 24	M 30	245	345	8	M 24	35	260	375	120	24	M 24×65	485	520
	75	56	6	48	M 24	M 30	291	345	8	M 24	35	260	375	110	24	M 24×65	700	760
340	–	42	6	36	M 20	M 24	194	365	8	M 24	35	280	370	190	24	M 24×65	280	305
	75	56	6	48	M 24	M 30	287	365	8	M 24	35	280	370	190	24	M 24×65	590	630
	75	60	6	56	M 24	M 36	308	365	8	M 24	35	280	420	125	24	M 24×65	830	900
360	–	42	6	36	M 20	M 24	194	385	8	M 24	35	300	390	210	24	M 24×65	315	340
	75	56	6	48	M 24	M 30	288	385	8	M 24	35	300	390	210	24	M 24×65	660	700
	80	68	7	64	M 24	M 36	337	385	8	M 24	35	300	440	145	24	M 24×65	950	1 020
380	–	56	6	48	M 20	M 24	200	405	8	M 24	35	320	410	230	24	M 24×65	350	380
	75	60	6	56	M 30	M 30	294	405	8	M 24	35	320	410	230	24	M 24×65	730	770
	85	68	7	64	M 30	M 36	346	405	8	M 30	45	305	465	130	30	M 30×80	1 060	1 140
400	–	56	6	48	M 24	M 30	211	425	8	M 24	35	340	430	250	24	M 24×65	420	450
	80	68	7	64	M 30	M 36	291	425	8	M 24	35	340	430	250	24	M 24×65	820	870
	85	68	7	64	M 30	M 36	364	425	8	M 30	45	325	495	145	30	M 30×80	1 240	1 330
420	–	56	6	48	M 24	M 30	217	445	8	M 30	40	345	450	240	30	M 30×80	465	500
	85	68	7	64	M 30	M 36	318	445	8	M 30	45	345	450	240	30	M 30×80	1 000	1 070
	90	72	8	64	M 30	M 36	380	445	8	M 30	45	345	520	155	30	M 30×80	1 500	1 600

10.4 SBD plummer block housings for bearings on a cylindrical seat and a multi-stepped shaft

d_a **100 – 170** mm

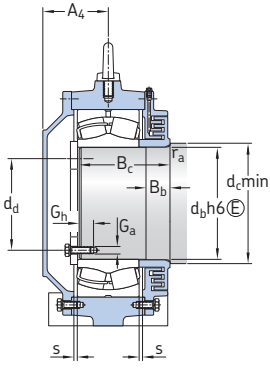

Type AL
Non-locating bearing
Housing for shaft end

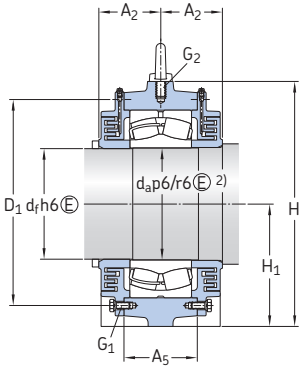

Type BF
Locating bearing
Housing for through shaft

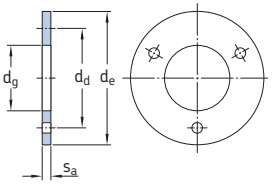

Shaft diam.	Housing	Appropriate bearing[1]	Dimensions Housing											
d_a			A_1	A_2	A_4	A_5	D_1	H	H_1	H_2	J	J_1	L	N
mm	–	–	mm											
100	**SBDD 2220 G**	22220 E	110	70	63	56	195	230	115	35	300	60	370	–
110	**SBDD 3122 G**	23122 CC/W33	150	81	83	80	215	270	130	40	300	80	400	35
	SBDD 2222 G	22222 E	120	78	68	64	215	260	130	38	340	60	410	–
	SBDD 3222 G	23222 CC/W33	130	91	76	90	230	285	140	42	350	70	440	35
120	**SBDD 3024 G**	23024 CC/W33	110	63	63	56	195	230	115	35	300	60	370	–
	SBDD 3124 G	23124 CC/W33	140	76	78	85	230	285	140	40	330	80	410	35
	SBDD 2224 G	22224 E	130	80,5	68	70	230	275	140	40	360	70	430	–
	SBDD 3224 G	23224 CC/W33	140	93	78	95	245	305	150	42	370	75	470	35
130	**SBDD 3026 G**	23026 CC/W33	120	68	68	64	215	260	130	38	340	60	410	–
	SBDD 3126 G	23126 CC/W33	140	80	80	90	240	295	145	40	350	80	430	35
	SBDD 2226 G	22226 E	140	88	70	70	245	290	145	42	370	80	455	–
	SBDD 3226 G	23226 CC/W33	150	103	78	100	260	325	160	45	400	85	500	40
140	**SBDD 3028 G**	23028 CC/W33	130	68	68	70	230	275	140	40	360	70	430	–
	SBDD 3128 G	23128 CC/W33	150	85	85	95	260	315	155	45	380	85	470	35
	SBDD 2228 G	22228 CC/W33	160	94	83	82	275	330	165	50	420	95	510	–
	SBDD 3228 G	23228 CC/W33	160	108	88	110	285	350	170	50	430	85	530	40
150	**SBDD 3030 G**	23030 CC/W33	140	78	70	76	245	290	145	42	370	80	455	–
	SBDD 3130 G	23130 CC/W33	200	93	93	102	285	345	170	60	450	110	580	45
	SBDD 2230 G	22230 CC/W33	170	98	88	90	300	360	180	52	450	100	540	–
	SBDD 3230 G	23230 CC/W33	170	113	93	120	305	375	180	54	450	90	550	45
160	**SBDD 3032 G**	23032 CC/W33	150	78	76	76	260	310	155	45	390	90	480	–
	SBDD 3132 G	23132 CC/W33	200	98	98	110	310	368	180	55	430	110	540	40
	SBDD 2232 G	22232 CC/W33	180	101	88	96	315	370	185	55	480	105	570	–
	SBDD 3232 G	23232 CC/W33	180	118	98	130	330	395	190	58	490	105	600	45
170	**SBDD 3034 G**	23034 CC/W33	160	78	83	82	280	330	165	50	420	95	510	–
	SBDD 3134 G	23134 CC/W33	200	113	112	120	330	395	190	60	470	110	570	45
	SBDD 2234 G	22234 CC/W33	190	112,5	97	104	335	400	200	60	510	110	600	–
	SBDD 3234 G	23234 CC/W33	200	128	103	135	345	410	200	62	525	110	640	45

[1] Only typical bearings are listed. Other bearing variants can also fit the housing.
[2] Tolerance p6 for shaft diameters up to 140 mm and tolerance r6 for larger sizes.

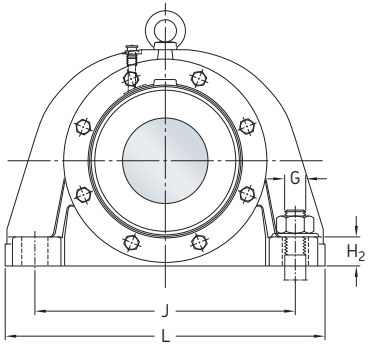

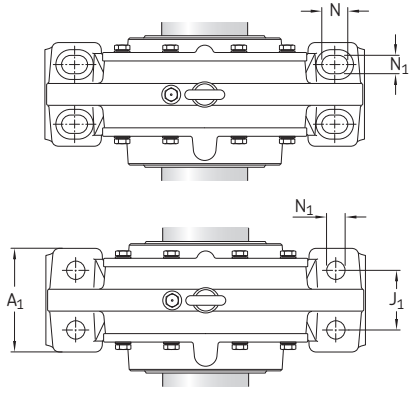

Shaft diam.	Dimensions Housing				Eye bolt acc. to DIN 580	Dimensions Shaft abutment and fillet								End plate					Mass Housing type	
d_a	N_1	s	G	G_1	G_2	B_b	B_c	d_b	d_c min	d_f	r_a	G_a	G_h	d_d	d_e	d_{gmax}	s_a	attachment bolts (for end plate)	A	B
mm	mm				–	mm						–	mm						kg	
100	24	2	20	M 8	M 12	35	90	102	115	98	4	M 10	18	75	115	35	10	M 10×30	23	25
110	25	2	20	M 12	M 12	30	107	112	125	108	4	M 8	15	90	122	58	8	M 8×25	40	45
	24	2	20	M 8	M 12	35	102	112	125	108	4	M 10	18	85	128	42	10	M 10×30	37	40
	30	2	24	M 12	M 16	32	123	112	125	108	4	M 8	15	90	128	45	8	M 8×25	46	50
120	24	2	20	M 8	M 12	25	84	122	135	118	4	M 10	18	95	132	58	10	M 10×30	19	20
	25	2	20	M 12	M 12	30	105	122	135	118	4	M 8	15	100	133	67	8	M 8×25	45	50
	28	3	24	M 8	M 12	35	107	122	135	118	4	M 10	18	95	138	52	10	M 10×30	43	46
	30	2	24	M 12	M 16	32	128	122	135	118	4	M 10	18	95	138	45	10	M 10×30	50	55
130	24	2	20	M 8	M 12	25	92	132	150	128	6	M 10	18	105	145	65	10	M 10×30	28	30
	25	2	20	M 12	M 12	30	110	132	150	128	6	M 8	15	110	145	75	8	M 8×25	50	55
	28	3	24	M 10	M 12	40	117	132	150	128	6	M 10	18	105	150	60	10	M 10×30	52	56
	30	2	24	M 12	M 16	35	140	132	150	128	6	M 10	18	105	150	55	10	M 10×30	60	65
140	28	3	24	M 8	M 12	25	92	142	160	138	6	M 10	18	115	155	75	10	M 10×30	32	35
	25	2	20	M 12	M 12	30	116	142	160	138	6	M 10	18	115	155	75	10	M 10×30	58	65
	35	3	30	M 10	M 12	40	125	142	160	138	6	M 10	18	115	162	68	10	M 10×30	65	70
	30	3	24	M 16	M 20	35	145	142	160	138	6	M 10	18	115	160	60	10	M 10×30	74	80
150	28	3	24	M 10	M 12	25	99	152	170	148	6	M 10	18	125	165	85	10	M 10×30	37	40
	35	3	24	M 12	M 16	30	130	152	170	148	6	M 10	18	125	165	85	10	M 10×30	78	85
	35	3	30	M 12	M 16	40	132	152	170	148	6	M 10	18	125	175	75	10	M 10×30	77	82
	35	3	30	M 16	M 20	40	158	152	170	148	6	M 10	18	125	170	70	10	M 10×30	87	95
160	28	3	24	M 10	M 12	30	105	162	185	158	8	M 10	18	135	175	95	10	M 10×30	41	45
	30	3	24	M 12	M 16	30	138	162	185	158	8	M 10	18	135	178	92	10	M 10×30	90	100
	35	3	30	M 12	M 16	40	138	162	185	158	8	M 12	20	130	185	75	12	M 12×30	90	96
	35	3	30	M 16	M 20	40	167	162	185	158	8	M 12	20	130	185	70	12	M 12×30	100	110
170	35	3	30	M 10	M 12	30	109	172	195	168	8	M 10	18	145	185	105	10	M 10×30	50	55
	35	3	30	M 12	M 20	40	154	172	195	168	8	M 10	18	145	185	105	10	M 10×30	100	110
	35	4	30	M 12	M 16	45	152	172	195	168	8	M 16	25	130	200	60	16	M 16×45	103	110
	35	3	30	M 16	M 20	40	179	172	195	168	8	M 12	20	140	195	75	12	M 12×30	130	140

10.4 SBD plummer block housings for bearings on a cylindrical seat and a multi-stepped shaft

d_a **180 – 280** mm

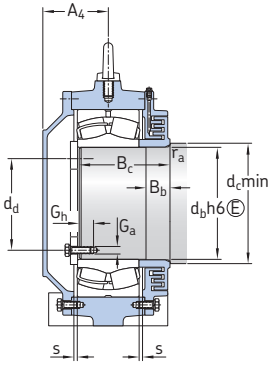

Type AL
Non-locating bearing
Housing for shaft end

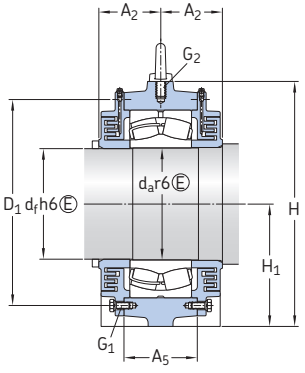

Type BF
Locating bearing
Housing for through shaft

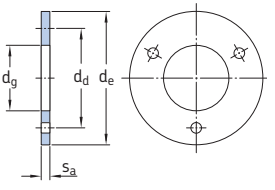

Shaft diam.	Housing	Appropriate bearing[1]	Dimensions Housing											
d_a			A_1	A_2	A_4	A_5	D_1	H	H_1	H_2	J	J_1	L	N
mm	–	–	mm											
180	**SBDD 3036 G**	23036 CC/W33	170	83	88	90	305	360	180	52	450	100	540	–
	SBDD 3136 G	23136 CC/W33	200	118	116	125	350	410	200	60	490	105	600	45
	SBDD 2236 G	22236 CC/W33	200	118	102	110	360	430	215	65	540	115	640	–
	SBDD 3236 G	23236 CC/W33	210	133	108	140	360	430	210	65	550	120	680	45
190	**SBDD 3038 G**	23038 CC/W33	180	93	88	96	315	370	185	55	480	105	570	–
	SBDD 3138 G	23138 CC/W33	210	123	120	130	370	435	210	65	550	120	680	45
	SBDD 2238 G	22238 CC/W33	200	118	102	110	370	430	215	65	540	115	640	–
	SBDD 3238 G	23238 CC/W33	220	138	113	150	385	455	220	75	560	120	710	45
200	**SBDD 3040 G**	23040 CC/W33	190	97	97	104	340	400	200	60	510	110	600	–
	SBDD 3140 G	23140 CC/W33	220	127	127	135	380	455	220	85	560	120	710	52
	SBDD 2240 G	22240 CC/W33	210	122	107	118	390	450	225	70	560	120	680	–
	SBDD 3240 G	23240 CC/W33	240	138	118	165	405	475	235	75	640	140	780	52
220	**SBDD 3044 G**	23044 CC/W33	200	102	102	110	370	430	215	65	540	115	640	–
	SBDD 3144 G	23144 CC/W33	230	135	135	150	420	485	235	75	640	140	780	52
	SBDD 2244 G	22244 CC/W33	220	124,5	117	128	435	500	250	75	600	130	720	–
	SBDD 3244 G	23244 CC/W33	250	148	133	175	445	525	260	80	700	140	850	52
240	**SBDD 3048 G**	23048 CC/W33	210	102	107	118	390	450	225	70	560	120	680	–
	SBDD 3148 G	23148 CC/W33	250	152	142	160	455	550	270	80	720	140	890	52
	SBDD 2248 G	22248 CC/W33	250	130	132	144	490	570	285	85	690	150	820	–
	SBDD 3248 G	23248 CC/W33	250	148	148	190	490	590	290	90	750	140	900	52
260	**SBDD 3052 G**	23052 CC/W33	220	107	117	128	435	500	250	75	600	130	720	–
	SBDD 3152 G	23152 CC/W33	250	152	152	175	490	590	290	90	750	140	900	52
	SBDD 2252 G	22252 CC/W33	260	145	137	154	520	590	295	90	730	160	860	–
	SBDD 3252 G	23252 CC/W33	290	167	158	205	535	625	310	95	800	160	960	65
280	**SBDD 3056 G**	23056 CC/W33	240	117	122	128	455	520	260	80	630	140	760	–
	SBDD 3156 G	23156 CC/W33	250	157	165	175	510	590	290	90	750	140	900	65
	SBDD 2256 G	22256 CC/W33	270	152	147	158	555	630	315	95	770	170	900	–
	SBDD 3256 G	23256 CC/W33	300	178	163	210	555	645	320	100	840	170	1 000	65

[1] Only typical bearings are listed. Other bearing variants can also fit the housing.

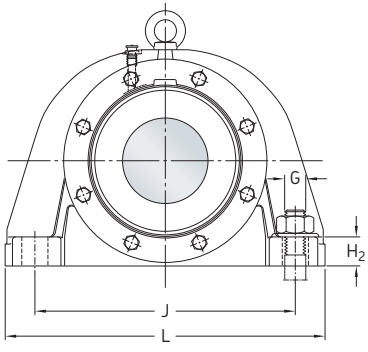

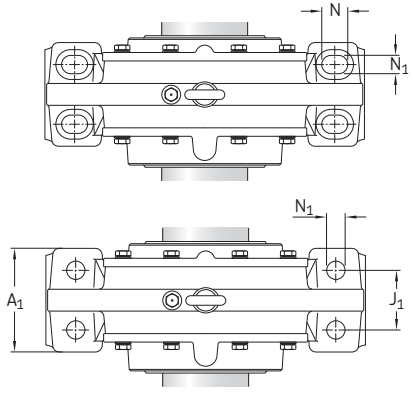

Shaft diam.	Dimensions Housing				Eye bolt acc. to DIN 580	Dimensions Shaft abutment and fillet						End plate						attachment bolts (for end plate)	Mass Housing type	
d_a	N_1	s	G	G_1	G_2	B_b	B_c	d_b	d_c min	d_f	r_a	G_a	G_h	d_d	d_e	d_{gmax}	s_a		A	B
mm	mm				–	mm						–	mm						kg	
180	35	3	30	M 12	M 16	30	117	182	205	178	8	M 10	18	155	195	115	10	M 10×30	64	70
	35	3	30	M 16	M 20	40	163	182	205	178	8	M 12	20	150	195	105	12	M 12×30	118	130
	42	4	36	M 16	M 20	45	157	182	205	178	8	M 16	25	140	210	70	16	M 16×45	112	120
	35	3	30	M 16	M 20	45	185	182	205	178	8	M 12	20	150	205	85	12	M 12×30	147	160
190	35	3	30	M 12	M 16	30	128	192	215	188	8	M 12	20	160	205	115	12	M 12×30	74	80
	35	3	36	M 16	M 20	40	172	192	215	188	8	M 12	20	160	210	110	12	M 12×30	146	160
	42	4	36	M 16	M 20	45	160	192	215	188	8	M 16	25	150	220	80	16	M 16×45	126	135
	35	4	30	M 16	M 20	45	197	192	215	188	8	M 12	20	160	215	95	12	M 12×30	170	185
200	35	4	30	M 12	M 16	35	135	202	225	198	8	M 16	25	160	215	105	16	M 16×45	83	90
	42	3	36	M 16	M 24	40	180	202	225	198	8	M 12	20	170	220	120	12	M 12×30	175	190
	42	4	36	M 16	M 20	45	167	202	225	198	8	M 20	30	150	235	65	20	M 20×55	145	155
	42	4	36	M 16	M 24	45	198	202	225	198	8	M 16	25	160	230	80	16	M 16×45	200	220
220	42	4	36	M 16	M 20	35	144	222	245	218	8	M 16	25	180	240	120	16	M 16×45	107	115
	42	4	36	M 16	M 24	45	191	222	245	218	8	M 16	25	180	245	115	16	M 16×45	205	220
	42	4	36	M 16	M 20	45	175	222	245	218	8	M 20	30	170	260	80	20	M 20×55	187	200
	42	4	36	M 20	M 24	45	216	222	245	218	8	M 16	25	180	255	95	16	M 16×45	270	290
240	42	4	36	M 16	M 20	35	145	242	265	238	8	M 20	30	190	260	120	20	M 20×55	120	130
	42	4	36	M 20	M 24	50	212	242	265	238	8	M 16	25	200	265	135	16	M 16×45	250	270
	42	5	36	M 20	M 24	45	186	242	265	238	8	M 20	30	190	285	95	20	M 20×55	235	250
	42	5	36	M 20	M 24	45	224	242	265	238	8	M 16	25	200	290	110	16	M 16×45	345	370
260	42	4	36	M 16	M 20	35	155	262	285	258	8	M 20	30	210	285	135	20	M 20×55	153	165
	42	4	36	M 20	M 24	50	220	262	285	258	8	M 16	25	220	285	155	16	M 16×45	300	320
	42	5	36	M 20	M 24	50	205	262	285	258	8	M 20	30	210	305	95	20	M 20×55	290	310
	42	5	36	M 20	M 24	45	249	262	285	258	8	M 16	25	220	305	115	16	M 16×45	435	470
280	42	5	36	M 16	M 20	35	166	282	305	278	8	M 20	30	230	305	155	20	M 20×55	177	190
	42	5	36	M 24	M 24	50	225	282	305	278	8	M 16	25	240	305	175	16	M 16×45	325	350
	42	5	36	M 20	M 24	50	212	282	305	278	8	M 24	35	220	325	195	24	M 24×65	330	350
	42	5	36	M 24	M 30	50	261	282	305	278	8	M 20	30	230	325	80	20	M 20×55	490	530

10.4 SBD plummer block housings for bearings on a cylindrical seat and a multi-stepped shaft

d_a **300 – 420** mm

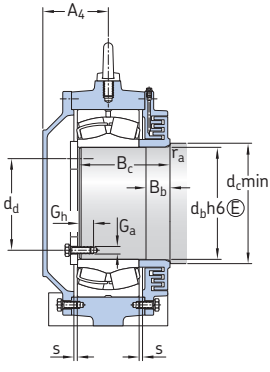

Type AL
Non-locating bearing
Housing for shaft end

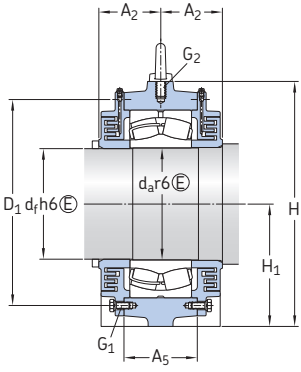

Type BF
Locating bearing
Housing for through shaft

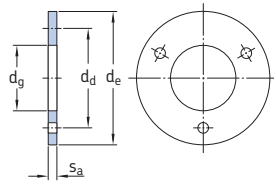

Shaft diam.	Housing	Appropriate bearing[1]	Dimensions Housing											
d_a			A_1	A_2	A_4	A_5	D_1	H	H_1	H_2	J	J_1	L	N
mm	–	–	mm											
300	**SBDD 3060 G**	23060 CC/W33	250	122	132	144	500	570	285	85	690	150	820	–
	SBDD 3160 G	23160 CC/W33	300	162	167	190	550	655	320	100	840	170	1 000	65
	SBDD 2260 G	22260 CC/W33	280	160	152	168	585	660	330	100	820	180	960	–
	SBDD 3260 G	23260 CC/W33	330	182	187	230	600	705	350	105	920	180	1 100	75
320	**SBDD 3064 G**	23064 CC/W33	260	122	137	154	520	590	295	90	730	160	860	–
	SBDD 3164 G	23164 CC/W33	300	177	187	210	590	702	350	100	940	160	1 150	65
	SBDD 2264 G	22264 CC/W33	320	175	167	180	640	720	360	110	900	200	1 060	–
	SBDD 3264 G	23264 CC/W33	360	192	187	250	640	760	370	115	960	200	1 150	75
340	**SBDD 3068 G**	23068 CC/W33	270	132	147	158	565	630	315	95	770	170	900	–
	SBDD 3168 G	23168 CC/W33	360	197	237	220	630	735	370	115	960	200	1 150	75
	SBDD 3268 G	23268 CA/W33	380	202	237	265	680	810	390	125	980	200	1 200	75
360	**SBDD 3072 G**	23072 CC/W33	280	132	152	168	585	660	330	100	820	180	960	–
	SBDD 3172 G	23172 CC/W33	370	197	243	225	650	760	380	115	1 000	200	1 200	75
	SBDD 3272 G	23272 CA/W33	400	227	247	275	710	825	410	130	1 040	210	1 280	80
380	**SBDD 3076 G**	23076 CC/W33	300	137	157	168	605	680	340	105	840	190	1 000	-
	SBDD 3176 G	23176 CA/W33	380	202	254	230	680	790	390	125	1 000	200	1 200	75
	SBDD 3276 G	23276 CA/W33	405	232	257	295	745	880	425	135	1 100	225	1 350	85
400	**SBDD 3080 G**	23080 CC/W33	320	142	167	180	650	720	360	110	900	200	1 060	-
	SBDD 3180 G	23180 CA/W33	400	197	247	235	710	845	410	130	1 040	210	1 280	80
	SBDD 3280 G	23280 CA/W33	450	242	257	300	790	905	450	145	1 160	240	1 430	85
420	**SBDD 3084 G**	23084 CA/W33	340	147	167	180	670	750	375	115	940	210	1 100	-
	SBDD 3184 G	23184 CJ/W33	420	212	257	260	760	900	450	135	1 100	210	1 350	85
	SBDD 3284 G	23284 CA/W33	470	252	267	315	835	955	470	150	1 220	255	1 500	90

[1] Only typical bearings are listed. Other bearing variants can also fit the housing.

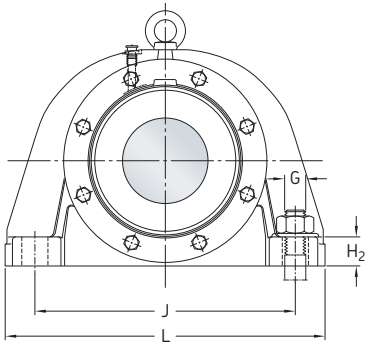

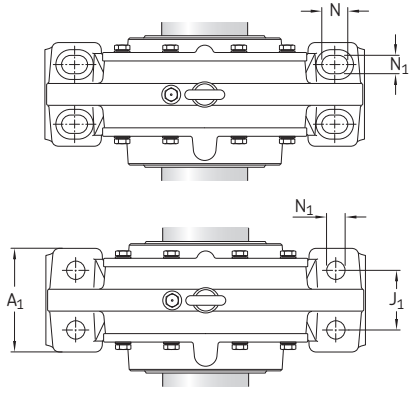

Shaft diam.	Dimensions Housing				Eye bolt acc. to DIN 580	Dimensions Shaft abutment and fillet						End plate						attachment bolts (for end plate)	Mass Housing type	
d_a	N_1	s	G	G_1	G_2	B_b	B_c	d_b	d_c min	d_f	r_a	G_a	G_h	d_d	d_e	d_{gmax}	s_a		A	B
mm	mm				–	mm						–	mm						kg	
300	42	5	36	M 20	M 24	35	177	302	325	298	8	M 20	30	250	325	175	20	M 20×55	215	230
	42	5	36	M 24	M 30	50	237	302	325	298	8	M 20	30	250	325	175	20	M 20×55	400	430
	42	5	36	M 20	M 24	50	225	302	325	298	8	M 24	35	240	350	105	24	M 24×65	400	430
	56	6	48	M 24	M 30	50	273	302	325	298	8	M 20	30	250	350	120	20	M 20×55	590	640
320	42	5	36	M 20	M 24	35	179	322	345	318	8	M 20	30	270	345	195	20	M 20×55	240	255
	42	5	36	M 24	M 30	50	260	322	345	318	8	M 20	30	270	350	190	20	M 20×55	490	530
	56	5	48	M 24	M 30	55	245	322	345	318	8	M 24	35	260	375	120	24	M 24×65	485	520
	56	6	48	M 24	M 30	50	291	322	345	318	8	M 24	35	260	375	110	24	M 24×65	700	760
340	42	6	36	M 20	M 24	40	194	342	365	338	8	M 24	35	280	370	190	24	M 24×65	280	305
	56	6	48	M 24	M 30	60	287	342	365	338	8	M 24	35	280	370	190	24	M 24×65	590	630
	60	6	56	M 24	M 36	50	308	342	365	338	8	M 24	35	280	420	125	24	M 24×65	830	900
360	42	6	36	M 20	M 24	40	194	362	385	358	8	M 24	35	300	390	210	24	M 24×65	315	340
	56	6	48	M 24	M 30	60	288	362	385	358	8	M 24	35	300	390	210	24	M 24×65	660	700
	68	7	64	M 24	M 36	70	337	362	385	358	8	M 24	35	300	440	145	24	M 24×65	950	1 020
380	56	6	48	M 20	M 24	40	200	382	405	378	8	M 24	35	320	410	230	24	M 24×65	350	380
	60	6	56	M 30	M 30	60	294	382	405	378	8	M 24	35	320	410	230	24	M 24×65	730	770
	68	7	64	M 30	M 36	70	346	382	405	378	8	M 30	45	305	465	130	30	M 30×80	1 060	1 140
400	56	6	48	M 24	M 30	40	211	402	425	398	8	M 24	35	340	430	250	24	M 24×65	420	450
	68	7	64	M 30	M 36	60	291	402	425	398	8	M 24	35	340	430	250	24	M 24×65	820	870
	68	7	64	M 30	M 36	70	364	402	425	398	8	M 30	45	325	475	145	30	M 30×80	1 240	1 330
420	56	6	48	M 24	M 30	40	217	422	445	418	8	M 30	40	345	450	240	30	M 30×80	465	500
	68	7	64	M 30	M 36	60	318	422	445	418	8	M 30	45	345	450	240	30	M 30×80	1 000	1 070
	72	8	64	M 30	M 36	70	380	422	445	418	8	M 30	45	345	520	155	30	M 30×80	1 500	1 600

10.5 THD take-up housings for spherical roller bearings on an adapter sleeve and a plain shaft

d_a **50 – 170** mm

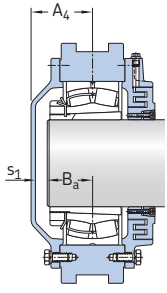

Type AL
Non-locating bearing
Housing for shaft end

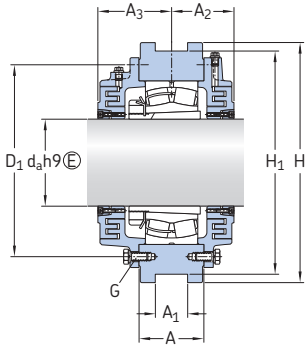

Type BF
Locating bearing
Housing for through shaft

Shaft diam.	**Housing**	**Appropriate parts** Bearing[1]	Adapter sleeve[2]	**Adapter ring** (incl.) Designation	**Dimensions** Housing						
d_a					A	A_1	A_2	A_3	A_4	A_5	A_6
mm	–	–		–	mm						
50	**THDD 2211**	22211 EK	H 311	PSBD 50	60	34	49	55	38	42	22
55	**THDD 2212**	22212 EK	H 312	PSBD 55	66	43	50	60	41	50	26
60	**THDD 2213**	22213 EK	H 313	PSBD 60	78	53	50	63	53	66	30
70	**THDD 2216**	22216 EK	H 316	PSBD 70	78	53	62	70	49	66	30
80	**THDD 2218**	22218 EK	H 318	PSBD 80	78	53	67	83	63	66	30
90	**THDD 2220**	22220 EK	H 320	PSBD 90	69	40	76	92	70	70	36
100	**THDD 2222**	22222 EK	H 322	PSBD 100	78	53	85	97	75	76	40
	THDD 3222	23222 CCK/W33	H 2322	PSBD 100	90	53	91	103	76	100	44
110	**THDD 2224**	22224 EK	H 3124	PSBD 110	78	53	84	99	72	76	40
	THDD 3224	23224 CCK/W33	H 2324	PSBD 110	95	53	93	108	78	100	44
115	**THDD 3226**	23226 CCK/W33	H 2326	PSBD 115	100	63	103	108	79	112	52
125	**THDD 2228**	22228 CCK/W33	H 3128	PSBD 125	83	53	80	102	90	74	40
	THDD 3228	23228 CCK/W33	H 2328	PSBD 125	110	63	108	118	88	112	52
135	**THDD 3030**	23030 CCK/W33	H 3030	PSBD 135	85	45	77,5	98,5	74,5	100	60
	THDD 3230	23232 CCK/W33	H 2330	PSBD 135	120	73	113	123	93	126	62
140	**THDD 3132**	23132 CCK/W33	H 3132	PSBD 140	116	74	101	126	101	132	62
	THDD 3232	23232 CCK/W33	H 2332	PSBD 140	130	83	118	133	98	126	62
150	**THDD 3034**	23034 CCK/W33	H 3034	PSBD 150	102	63	88	113	93	112	52
	THDD 3134	23134 CCK/W33	H 3134	PSBD 150	120	63	113	136	100	122	62
160	**THDD 3136**	23136 CCK/W33	H 3136	PSBD 160	120	60	115,5	135,5	113,5	130	64
	THDD 3236	23236 CCK/W33	H 2336	PSBD 160	140	93	133	148	108	140	72
170	**THDD 3038**	23038 CCK/W33	H 3038	PSBD 170	112	73	101	126	96	165	90
	THDD 3138	23138 CCK/W33	H 3138	PSBD 170	140	93	128	148	108	140	72

[1] Only typical bearings are listed. Other bearing variants can also fit the housing.
[2] Only typical adapter sleeves are listed. Other variants can also fit the housing.

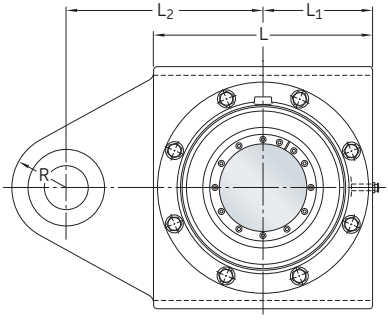

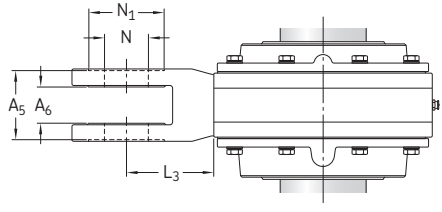

Shaft diam.	Dimensions Housing											Shaft abutment		Mass Housing type	
d_a	D_1	H	H_1	L	L_1	L_2	L_3	N	N_1	R	G	B_a	s_1	A	B
mm	mm										–	mm		kg	
50	115	150	135	150	75	105	30	20	40	30	M 8	27	5	10	10
55	130	165	150	165	82,5	120	37,5	25	50	35	M 8	30	5	12	12
60	140	180	155	160	80	145	65	30	60	40	M 8	35	11	16	16
70	155	200	175	180	90	155	65	30	60	40	M 8	36	6	22	23
80	180	230	200	210	105	170	65	30	60	40	M 8	40	16	29	30
90	195	250	220	235	117,5	185	67,5	35	70	40	M 8	45	18	35	37
100	215	270	240	255	125	200	70	40	75	45	M 8	50	18	40	45
	230	300	270	270	135	195	60	50	95	60	M 12	60	9	70	74
110	230	290	260	275	135	210	70	40	75	45	M 8	55	10	45	48
	245	310	280	290	145	205	60	50	95	60	M 12	64	7	75	80
115	260	335	305	300	155	220	75	60	110	70	M 12	66	5	80	85
125	275	330	300	315	155	230	70	40	70	45	M 12	62	20	56	61
	290	360	330	330	170	235	75	60	90	70	M 16	72	8	95	101
135	245	320	290	280	140	235	90	50	95	70	M 10	56	10	45	52
	305	385	355	360	180	260	80	70	120	80	M 16	78	7	118	126
140	310	370	340	370	185	350	160	61	110	90	M 12	75	18	136	146
	330	400	370	380	190	270	80	70	120	80	M 16	84	6	140	150
150	280	360	330	325	165	255	90	45	100	70	M 10	66	20	76	83
	330	380	350	375	190	395	160	60	160	80	M 12	78	17	150	184
160	350	440	410	400	200	360	85	80	140	100	M 16	82	23,5	160	172
	360	450	410	420	210	300	90	80	140	90	M 16	90	10	165	178
170	315	390	360	380	195	350	130	45	120	70	M 12	72	16	135	141
	365	450	410	420	210	300	90	80	140	90	M 16	88	12	166	176

10.5 THD take-up housings for spherical roller bearings on an adapter sleeve and a plain shaft

d_a **180 – 400** mm

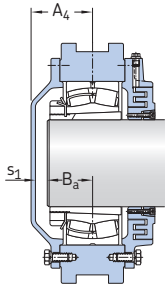

Type AL
Non-locating bearing
Housing for shaft end

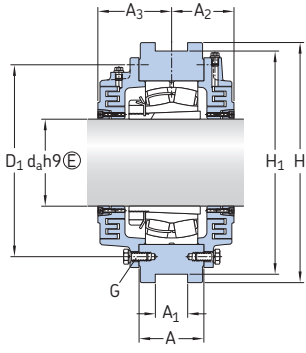

Type BF
Locating bearing
Housing for through shaft

Shaft diam.	Housing	Appropriate parts Bearing[1]	Adapter sleeve[2]	Adapter ring (incl.) Designation	Dimensions Housing						
d_a					A	A_1	A_2	A_3	A_4	A_5	A_6
mm	–	–		–	mm						
180	**THDD 3040**	23040 CCK/W33	H 3040	PSBD 180	125	83	107	133	108	125	62
	THDD 3140	23140 CCK/W33	H 3140	PSBD 180	138	90	115	148,5	120	128	62
	THDD 3240	23240 CCK/W33	H 2340	PSBD 180	165	103	138	158	118	140	72
200	**THDD 3044**	23044 CCK/W33	OH 3044 H	PSBD 200	120	65	107	142	107	145	70
	THDD 3144	23144 CCK/W33	OH 3144 H	PSBD 200	150	103	135	160	135	144	74
	THDD 3244	23244 CCK/W33	OH 2344 H	PSBD 200	175	103	148	183	133	240	173
220	**THDD 3148**	23148 CCK/W33	OH 3148 H	PSBD 220	152	65	148	178	138	215	123
	THDD 3248	23248 CCK/W33	OH 2348 H	PSBD 220	190	103	148	188	148	240	173
240	**THDD 3052**	23052 CCK/W33	OH 3052 H	PSBD 240	135	65	110,5	150,5	120,5	215	123
	THDD 3152	23152 CCK/W33	OH 3152 H	PSBD 240	175	80	152	187	152	225	135
	THDD 3252	23252 CCK/W33	OH 2352 H	PSBD 240	205	103	167	208	158	240	173
260	**THDD 3256**	23256 CCK/W33	OH 2356 H	PSBD 260	210	123	178	218	163	240	173
280	**THDD 3160**	23160 CCK/W33	OH 3160 H	PSBD 280	195	103	165	210	170	240	173
	THDD 3260	23260 CCK/W33	OH 3260 H	PSBD 280	230	123	182	222	187	240	173
300	**THDD 3164**	23164 CCK/W33	OH 3164 H	PSBD 300	210	123	177	212	187	240	170
	THDD 3264	23264 CCK/W33	OH 3264 H	PSBD 300	250	123	192	237	187	300	213
320	**THDD 3168**	23168 CCK/W33	OH 3168 H	PSBD 320	220	150	197	242	237	300	180
	THDD 3268	23268 CAK/W33	OH 3268 H	PSBD 320	265	123	202	272	237	300	213
340	**THDD 3272**	23272 CAK/W33	OH 3272 H	PSBD 340	275	123	227	282	247	300	213
360	**THDD 3176**	23176 CAK/W33	OH 3176 H	PSBD 360	230	120	202	257	254	300	200
	THDD 3276	23276 CAK/W33	OH 3276 H	PSBD 360	295	123	232	297	257	300	213
380	**THDD 3280**	23280 CAK/W33	OH 3280 H	PSBD 380	300	123	242	307	257	300	213
400	**THDD 3284**	23284 CAK/W33	OH 3284 H	PSBD 400	315	123	252	317	267	300	213

[1] Only typical bearings are listed. Other bearing variants can also fit the housing.
[2] Only typical adapter sleeves are listed. Other variants can also fit the housing.

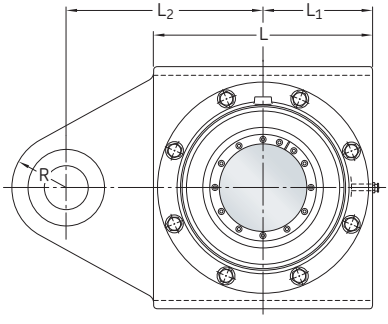

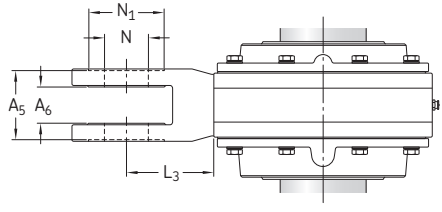

Shaft diam.	Dimensions Housing											Shaft abutment		Mass Housing type	
d_a	D_1	H	H_1	L	L_1	L_2	L_3	N	N_1	R	G	B_a	s_1	A	B
mm	mm										–	mm		kg	
180	340	430	400	390	200	275	85	70	120	80	M 12	78	22	160	167
	380	440	420	440	220	300	80	60	110	80	M 16	95	15	175	190
	405	500	460	470	235	325	90	80	140	90	M 16	100	10	270	290
200	370	480	440	430	210	325	100	60	100	80	M 16	80	17	200	220
	420	510	480	470	235	530	260	100	175	120	M 16	100	25	240	255
	445	540	500	520	260	575	245	100	175	150	M 20	112	11	380	400
220	455	540	500	520	260	515	250	100	250	150	M 20	106	22	310	360
	490	580	540	560	280	600	250	100	175	150	M 20	122	16	460	485
240	435	540	500	500	245	515	260	100	250	150	M 16	92	16,5	269	280
	490	570	540	550	275	565	270	100	250	150	M 20	118	24	400	460
	540	610	570	590	305	615	220	100	200	150	M 20	132	16	545	580
260	555	650	610	630	315	630	220	100	175	150	M 24	135	16	590	630
280	550	650	610	625	312	630	250	100	240	150	M 24	125	35	540	580
	600	670	630	670	335	650	220	100	175	150	M 24	142	33	678	730
300	590	670	630	665	340	650	230	100	175	150	M 24	135	40	650	690
	640	710	670	710	355	725	275	110	185	200	M 24	152	21	800	860
320	630	740	700	740	370	720	310	120	240	200	M 24	155	70	760	880
	680	750	700	750	375	750	285	110	185	200	M 24	175	47	920	1 000
340	710	790	740	790	395	765	275	110	185	200	M 24	180	51	1 050	1 120
360	680	790	740	750	375	750	320	110	230	200	M 30	165	73	890	1 000
	745	820	780	810	420	780	310	110	230	200	M 30	186	55	1 200	1 280
380	790	870	820	870	435	800	270	110	185	200	M 30	196	45	1 480	1 580
400	835	925	860	925	463	825	262	110	185	200	M 30	212	39	1 880	1 980


SKF
FNL 511 A

Flanged housings FNL series

Bearing types
- Self-aligning ball bearings
- Spherical roller bearings
- CARB toroidal roller bearings

Bearing dimension series
- 02, 22

Shaft diameter range
- 20 to 100 mm

Typical shaft-bearing combinations
- Plain shaft with bearing on an adapter sleeve

Seals
- Double-lip

Lubrication
- Grease

Materials
- Grey cast iron

Mounting
- Three-bolt mounting
- Four-bolt mounting

Compliance to standards
- Not standardized

Supersedes
- 7225(00)

FNL flanged housings are well-proven machine parts that provide simple, reliable housing in applications without horizontal frames. They enable the full service life potential of the incorporated bearings to be exploited with less need for maintenance.

Flanged housings FNL series

Designations 533

Standard housing design 535
Features and benefits 536
Housing material 536
Paint, corrosion protection 536
Dimension standards 537
Interchangeability 537

Housing variants 537
Centring recesses 537
Grease escape hole 537

Sealing solutions 538

Design considerations 539
Typical shaft-bearing combinations . . . 539
Locating and non-locating bearing positions 539
Load carrying capacity 540
Operating temperature 540
Operating speed 541
Attachment bolt recommendations 541

Lubrication 542
Initial grease fill 542
Relubrication 542

Mounting 544

Condition monitoring 544

Accessories 544

Ordering information 545

Product tables
11.1 FNL flanged housings for bearings on adapter sleeves 546

Designations

Designation system for FNL flanged housings

FNL 505 A

Series

FNL Flanged housing

Size identification

5(00) Housing for bearings on an adapter sleeve, diameter series 2
(00) Size code of the bearing, (00) × 5 = bearing bore diameter [mm]

Suffixes[1)]

A Housing for shaft end with end cover
B Housing for through shaft
P Housing with machined recess for guide ring
V Housing with grease escape hole in the housing cover

[1)] When multiple suffixes are used, they are listed in the same order as shown here.

Designation system for seals

TFL 505

Series

TFL Double-lip seal for FNL flanged housings

Size identification

... Size code of the housing

Flanged housings FNL series

Designation system for locating rings

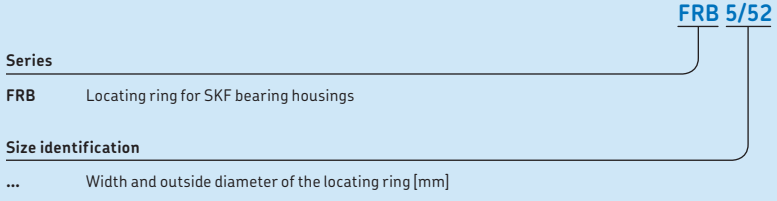

Designation system for spacing washers

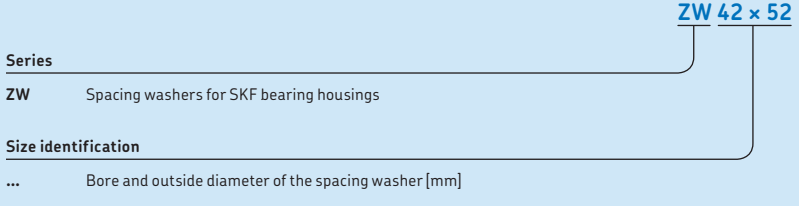

Standard housing design

FNL flanged housings are non-split housings that are produced in two designs depending on size. Smaller sizes up to and including size 13 have a triangular flange (→ **fig. 1**), larger sizes have a square flange (→ **fig. 2**). FNL housings are supplied with a cover either for shaft ends or for through shafts (→ **fig. 3**). The housings with a cover for shaft ends have the designation suffix A, the housings with a cover for through shafts have the designation suffix B.

Fig. 1

FNL housing with triangular flange

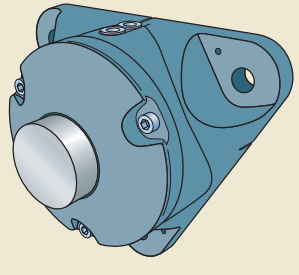

Fig. 2

FNL housing with square flange

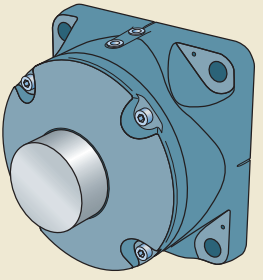

Fig. 3

FNL housings for shaft end or through shaft

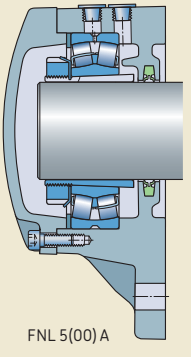

FNL 5(00) A

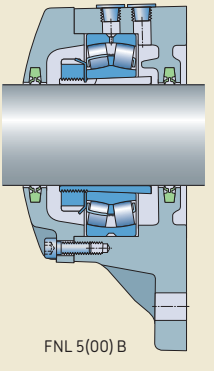

FNL 5(00) B

Features and benefits

FNL flanged housings have the following features and benefits:

Simple mounting

To simplify mounting and make alignment more accurate, lines cast into the housing flange indicate the centre of the housing bore. Dimples indicate the position for dowel pins (→ **fig. 4**).

Grease guiding system

An integrated flange guides grease from the grease fitting into the bearing (→ **fig. 5**).

Low friction seals

A low friction, double-lip seal on each side of the housing keeps grease in and contaminants out (→ **fig. 6**). These seals allow rotational speeds twice that of traditional felt seals.

Drilled holes for relubrication

FNL housings have two predrilled holes for relubrication. One is centered and enables relubrication via a lubrication feature in the bearing. The other is offset and enables relubrication from the side.

Housing material

FNL flanged housings are made of grey cast iron.

Paint, corrosion protection

FNL flanged housings are painted black (RAL 9005) using a water based alkyd/acryl paint. The paint protects the housing in accordance with ISO 12944-2, corrosivity category C2 (i.e. exterior atmospheres with low level of pollution, interior atmospheres where condensation may occur). The paint is not affected by most lubricating or engine oils, cutting fluids or alkalescent washing chemicals. Housings can be repainted with most water or solvent based 1- or 2-component paints.

Unpainted surfaces are protected by a solventless rust inhibitor.

Fig. 4

Cast indications mark the centre of the housing bore

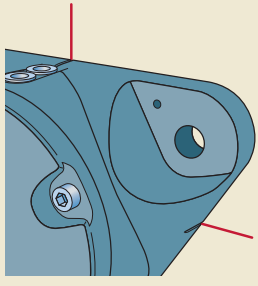

Fig. 5

Grease guiding system

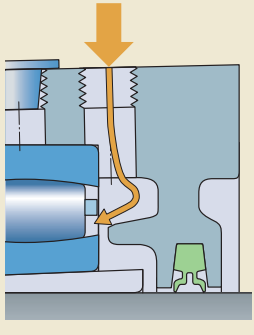

Fig. 6

Low friction seals

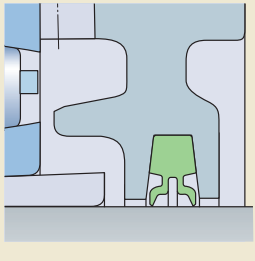

Dimension standards

The dimensions of FNL flanged housings are not standardized either nationally or internationally.

Interchangeability

FNL flanged housings are dimensionally interchangeable with the earlier 7225(00) housings.

Housing variants

In addition to standard design FNL flanged housings, variants are also available. Variants include housings with centring recesses and grease escape holes.

Centring recesses

FNL flanged housings can be supplied with a machined recess, which can be used to centre the housing on a shoulder. With this arrangement, the attachment bolts are not subjected to shear forces. The shoulder can be provided either by machining the wall or by attaching a guide ring to the wall.

FNL housings with a machined recess can be supplied on request and are identified by the designation suffix P, e.g. FNL 511 BP. Dimensions for the recess and the shoulder or guide ring are listed in **table 1**.

Grease escape hole

FNL flanged housings can be supplied with a grease escape hole in the cover (→ **fig. 7**). This housing variant can be supplied on request and is identified by the designation suffix V, e.g. FNL 511 AV.

Table 1

Centring recess on FNL housings

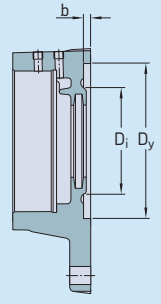

Housing Size	Recess dimensions b	D_y H8	D_i
–	mm		
FNL 505	3	60	35
FNL 506	3	70	48
FNL 507	4	80	53
FNL 508	4	90	60
FNL 509	4	100	65
FNL 510	5	100	68
FNL 511	5	105	78
FNL 512	5	120	90
FNL 513	5	130	90
FNL 515	6	150	105
FNL 516	6	150	110
FNL 517	6	170	120
FNL 518	7	170	120
FNL 520	6	200	140
FNL 522	6	220	160

Fig. 7

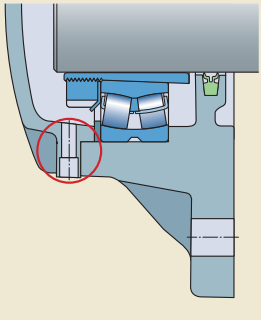

Table 2

Double-lip seals for FNL flanged housings

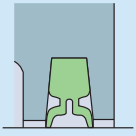

Type	Double-lip
Designation	TFL 5..
Size range	505 to 522
Material	HNBR (hydrogenated nitrile butadiene rubber)

Application conditions and requirements

Temperature [°C]	–25 to +120
Temperature [°F]	–15 to +250
Max. circumferential speed[1] [m/s]	8
Max. misalignment [°]	0,5
Low friction	+
Axial shaft displacement	++
Vertical shaft arrangement	+
Replacement	+
Shaft tolerance class	h9Ⓔ
Shaft roughness R_a [µm]	≤ 3,2

Sealing suitability

Dust	++
Fine particles	++
Coarse particles	++
Chips	+
Liquids when sprayed	+
Direct sunlight	+

Symbols: ++ very suitable
+ suitable

[1] To convert circumferential speeds to rotational speeds → **table 7** on **page 37**

Sealing solutions

FNL flanged housings are equipped with low-friction, double-lip grease seals (→ **fig. 8**). **Table 2** provides an overview of the characteristics and suitability of the sealing solution. This information should be used as a guideline and does not substitute for testing a seal in its application.

Seals are supplied with the housing. If additional seals are needed, they can be ordered separately. They are identified by the designation prefix TFL followed by a number indicating the size, e.g. TFL 511.

Fig. 8

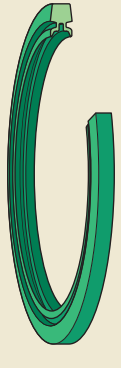

Design considerations

For general information about system design, refer to the following sections:

- *Typical shaft-bearing combinations* (→ **page 41**)
- *Locating/non-locating bearing arrangements* (→ **page 40**)
- *Load carrying capacity* (→ **page 44**)
- *Axial load carrying capacity for bearings on a sleeve* (→ **page 44**)
- *Specifications for shafts and housing support surfaces* (→ **page 45**)

For additional information about rolling bearings and adapter sleeves, refer to the product information available online at skf.com/bearings.

Typical shaft-bearing combinations

FNL flanged housings can accommodate bearings on an adapter sleeve on plain shafts.

Locating and non-locating bearing positions

FNL housings can be used for both the locating and non-locating bearing positions. The housings are machined standard for bearings in the non-locating position. Bearings in the locating position as well as CARB toroidal roller bearings must be secured in the housing with a spacing washer or one or two locating rings (→ **fig. 9**). Appropriate spacing washers and locating rings are listed in the product tables.

When a spacing washer or only one locating ring is used, it should be inserted on the cover side of the bearing. When two locating rings are used, one should be placed on each side of the bearing.

Fig. 9

Spherical roller bearing in the locating position

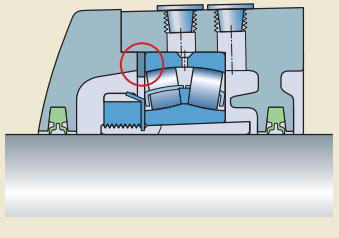

Load carrying capacity

The permissible radial loads for a flanged housing depend on the bearing, the breaking load of the housing and the strength of the attachment bolts. Guideline values for the breaking loads of the housings are provided in **table 3**.

The permissible axial loads for a flanged housing are limited by the friction between the sleeve and shaft.

Additional housing support

When the housing is subjected to heavy radial loads, a stop or dowel pins should be used to relieve the load on the attachment bolts. A shoulder or a guide ring on the support surface engaging a centring recess can also be used. Whichever method is used, it should be sufficiently strong to accommodate the loads acting parallel to the support surface.

Recommendations for the position and size of the holes to accommodate dowel pins are provided in **table 4**. Dimples cast into the housing flange mark the recommended positions.

Operating temperature

The permissible operating temperature is mainly limited by the seals (→ **table 2**, **page 538**) and the lubricant. For temperature limits of SKF bearings and lubricants, refer to the product information available online at skf.com/bearings.

The housing material does not set any additional temperature limits, except for very low temperature applications where impact strength could be a factor.

The housing paint is heat resistant up to 80 °C *(175 °F)* material temperature or 100 °C *(210 °F)* ambient temperature.

When temperatures outside the permissible range are expected, contact the SKF application engineering service.

Table 3

Breaking loads for FNL housings

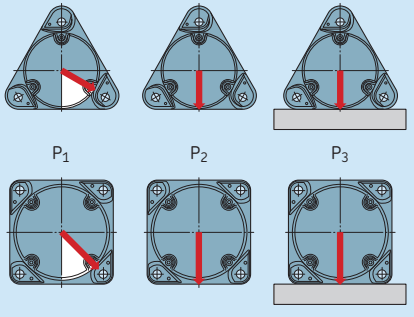

Housing Size	Breaking loads P_1	P_2	P_3
–	kN		
FNL 505	50	40	80
FNL 506	60	45	85
FNL 507	70	50	90
FNL 508	80	55	95
FNL 509	90	60	100
FNL 510	100	65	105
FNL 511	110	80	110
FNL 512	120	95	115
FNL 513	130	110	190
FNL 515	140	125	265
FNL 516	150	140	340
FNL 517	160	155	415
FNL 518	170	170	490
FNL 520	180	185	565
FNL 522	190	200	640

Table 4

Position and size of dowel pin holes

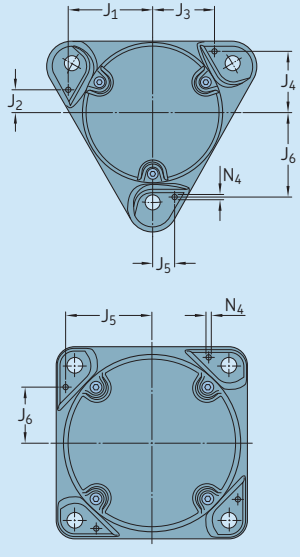

Housing Size	Dimensions J_1	J_2	J_3	J_4	J_5	J_6	N_4 max
–	mm						
FNL 505	44	12	33	32	12	44	5
FNL 506	51	13	37	37	13	51	5
FNL 507	57	16	42	41	15	57	5
FNL 508	65	17	48	47	16	66	6
FNL 509	71	20	53	52	18	72	6
FNL 510	71	20	53	52	18	72	6
FNL 511	77	21	57	56	21	77	6
FNL 512	84	22	62	61	22	84	8
FNL 513	90	24	66	66	24	90	8
FNL 515	–	–	–	–	85	55	8
FNL 516	–	–	–	–	87	54	8
FNL 517	–	–	–	–	93	63	8
FNL 518	–	–	–	–	95	60	8
FNL 520	–	–	–	–	112	72	8
FNL 522	–	–	–	–	122	78	8

Operating speed

The seals can limit the permissible operating speed. They are suitable for circumferential speeds of up to 8 m/s. The corresponding rotational speeds are listed in **table 7** on **page 37**. For speed limits of the bearing, refer to the product information available online at skf.com/bearings.

Attachment bolt recommendations

In typical applications, 8.8 class hexagon head bolts in accordance with ISO 4014 can be used together with washers in accordance with ISO 7089 or 7090. SKF housings can withstand loads resulting from tightening the attachment bolts to the torque values recommended by bolt manufacturers (→ **table 6**, **page 544**). They are valid for oiled, but otherwise untreated, thread surfaces.

If the bearing arrangement is subjected to heavy radial loads, it may be necessary to use stronger, 10.9 class bolts.

SKF cannot guarantee that tightening to the recommended value will provide sufficient anchoring. Make sure that attachment bolts, dowels or stops, shoulder or guide ring can accommodate all occurring loads.

Lubrication

FNL flanged housings are designed for grease lubrication. The lubricant should be selected based on the operating conditions of the bearing. For additional information about lubricant selection, refer to the product information available online at skf.com.

Initial grease fill

If no other requirements exist, the free space in the bearing should be completely filled with grease and the free space in the housing should be filled to 20 to 40% of its volume. A 40% grease fill is required when bearings have to be relubricated from the side, while a 20% grease fill is used when bearings are relubricated via the outer ring.

For highly contaminated environments and slow speeds, fill the housing to 70–80%. For additional information, contact the SKF application engineering service.

Quantities for 20 and 40% grease fills are listed in **table 5**.

The values are valid for a typical lithium grease (about 0,95 g/cm³). They include grease for the bearing and the seals.

In most applications, the initial grease fill will adequately lubricate the bearing until the grease is exchanged during the next planned inspection.

Relubrication

Certain operating conditions such as high speeds, high temperatures or heavy loads may require relubrication. Therefore FNL housings have two holes that have been drilled and tapped for an AH 1/8-27 PTF grease fitting (→ **fig. 10**). On a new housing, the holes are covered by plastic plugs. These plugs should be replaced with the grease fitting and the threaded plug supplied with the housing. If a larger grease fitting or other equipment has to be used an adapter to change to a G 1/4 thread is available (→ **page 48**).

Excess grease can escape via the seals. If this is not enough, SKF can supply housings with a grease escape hole in the cover (designation suffix V) on request. SKF recommends removing the housing cover periodically to remove used grease. The time interval for this

Table 5

Initial grease fill

Housing Size	Initial fill 20%	40%
–	g	
FNL 505	10	15
FNL 506	15	25
FNL 507	25	35
FNL 508	30	45
FNL 509	35	50
FNL 510	35	50
FNL 511	40	60
FNL 512	60	90
FNL 513	80	120
FNL 515	150	250
FNL 516	180	300
FNL 517	210	350
FNL 518	250	400
FNL 520	320	500
FNL 522	420	650

Fig. 10

Relubrication holes

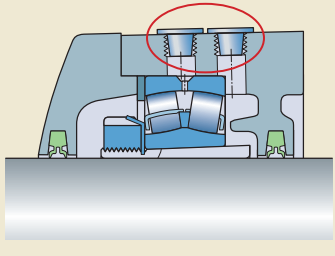

Fig. 11

Relubrication via the outer ring

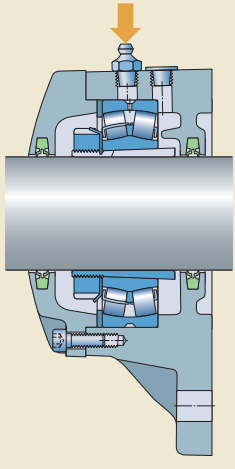

Fig. 12

Relubrication from the side

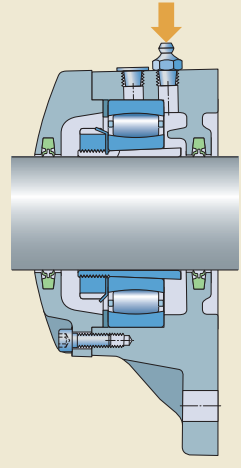

depends on the application, the size of the bearing and the amount of grease applied.

Relubrication via the outer ring

The hole closest to the cover should be used to relubricate spherical roller bearings with a relubrication feature (a lubrication groove and holes in the outer ring) (→ **fig. 11**). When applying grease via the relubrication feature the shaft should be rotating.

Relubrication from the side

When relubricating from the side, which is typically necessary for self-aligning ball bearings and CARB toroidal roller bearings, the hole closest to the flange should be used (→ **fig. 12**).

FNL flanged housings have an integral flange that guides grease from the grease fitting directly to the rolling elements (→ **fig. 13**).

Fig. 13

Grease guiding system

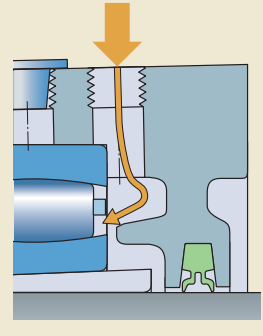

Mounting

FNL housings must be mounted properly using the appropriate tools and state of the art mechanical mounting methods. All the associated components must also meet certain basic requirements (→ *Specifications for shafts and housing support surfaces* on **page 45**).

Mounting instructions are provided with the housing. For information about mounting rolling bearings, refer to the *SKF bearing maintenance handbook* or skf.com/mount.

Torque specifications

Cover bolts and attachment bolts should be tightened to the torque values listed in **table 6**.

Condition monitoring

If connections for condition monitoring sensors are required, contact SKF.

Accessories

There are several accessories available for FNL housings, including lubricators, central lubrication systems and adapters for grease fittings. For additional information, refer to *SKF tools and products* (→ **page 47**).

Table 6

Tightening torque values for cover bolts and attachment bolts

Housing	Cover bolts		Attachment bolts	
Size	Size	Tightening torque	Size	Tightening torque[1]
–	–	Nm	–	Nm
FNL 505	M 5 × 16	6	M 10	50
FNL 506	M 5 × 16	6	M 10	50
FNL 507	M 5 × 16	6	M 12	80
FNL 508	M 5 × 16	6	M 12	80
FNL 509	M 6 × 20	10	M 12	80
FNL 510	M 6 × 20	10	M 12	80
FNL 511	M 6 × 20	10	M 12	80
FNL 512	M 6 × 20	10	M 12	80
FNL 513	M 6 × 20	10	M 12	80
FNL 515	M 8 × 25	24	M 16	200
FNL 516	M 8 × 25	24	M 16	200
FNL 517	M 8 × 25	24	M 16	200
FNL 518	M 8 × 25	24	M 16	200
FNL 520	M 10 × 30	47	M 20	385
FNL 522	M 10 × 30	47	M 20	385

[1] Recommended by bolt manufacturers

Ordering information

FNL housings are supplied together with their standard seals. Each of the following items must be ordered separately:

- housing
- locating rings or spacing washer
- bearing
- adapter sleeve

Order example

Two FNL flanged housings are required for two 22212 EK spherical roller bearings on H 312 adapter sleeves. One housing will accommodate the non-locating bearing at the end of the shaft. The other housing will accommodate the locating bearing and a through shaft.

The following items should be ordered (in addition to the bearings and adapter sleeves):

- 1 housing FNL 512 A
- 1 housing FNL 512 B
- 1 spacing washer ZW 90x110

11.1 FNL flanged housings for bearings on adapter sleeves

d_a **20 – 40** mm

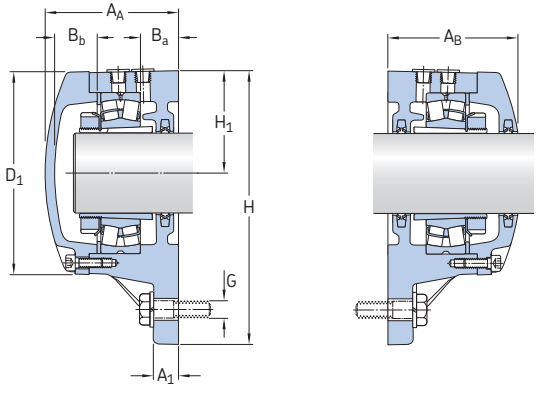

Shaft diameter d_a	**Housing** for shaft end	for through shaft	**Appropriate parts** Bearing[1]	Adapter sleeve[2]	Locating ring or spacing washer[3]	Contact seal
mm	–		–			
20	**FNL 505 A**	**FNL 505 B**	1205 EKTN9 2205 EKTN9 22205 EK C 2205 KTN9	H 205 H 305 H 305 H 305 E	1 FRB 5/52 1 ZW 42 × 52 1 ZW 42 × 52 1 ZW 42 × 52	TFL 505
25	**FNL 506 A**	**FNL 506 B**	1206 EKTN9 2206 EKTN9 22206 EK C 2206 KTN9	H 206 H 306 H 306 H 306 E	1 FRB 6/62 1 ZW 50×62 1 ZW 50×62 1 FRB 2/62	TFL 506
30	**FNL 507 A**	**FNL 507 B**	1207 EKTN9 2207 EKTN9 22207 EK C 2207 KTN9	H 207 H 307 H 307 H 307 E	1 FRB 8/72 1 ZW 65 × 72 1 ZW 65 × 72 1 ZW 65 × 72	TFL 507
35	**FNL 508 A**	**FNL 508 B**	1208 EKTN9 2208 EKTN9 22208 EK C 2208 KTN9	H 208 H 308 H 308 H 308 E	1 FRB 7/80 1 ZW 70 × 80 1 ZW 70 × 80 1 ZW 70 × 80	TFL 508
40	**FNL 509 A**	**FNL 509 B**	1209 EKTN9 2209 EKTN9 22209 EK C 2209 KTN9	H 209 H 309 H 309 H 309 E	1 FRB 6/85 1 ZW 75 × 85 1 ZW 75 × 85 1 ZW 75 × 85	TFL 509

1) Only the basic bearing designation is listed. Other bearing variants can also fit the housing.
12(00), 22(00) – self-aligning ball bearing, 222(00) – spherical roller bearing, C... – CARB toroidal roller bearing
2) The adapter sleeve fits the bearing in the same row only.
3) The locating ring or spacing washer fits the bearing in the same row only.

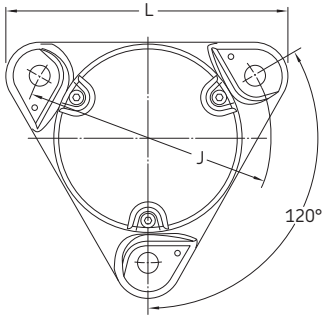

Shaft diameter	**Dimensions** Housing											**Mass** Housing
d_a	A_A	A_B	A_1	B_a	B_b	D_1	H	H_1	J	L	G	
mm	mm											kg
20	57	56,5	10	15	15	74	100	38	96	110	10	1,10
25	60,5	60	12	16	15	86	117	44	116	130	10	1,60
30	64,5	64	12	16	17	95	130	48,5	130	145	12	2,00
35	67	66	12	17	18	105	143	54	140	160	12	2,40
40	72	70,5	12	19	19	113	160	60	160	179	12	3,20

11.1 FNL flanged housings for bearings on adapter sleeves

d_a **45 – 60** mm

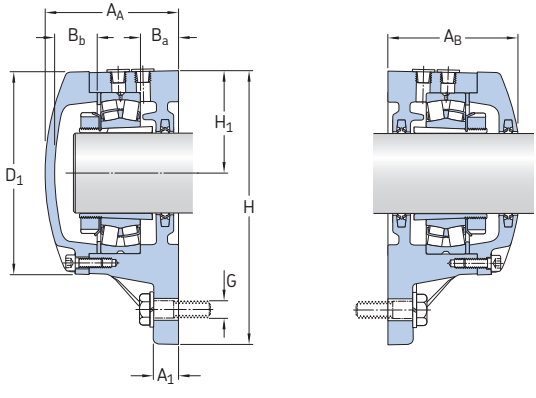

Shaft diameter d_a	Housing for shaft end	for through shaft	Appropriate parts Bearing[1]	Adapter sleeve[2]	Locating ring or spacing washer[3]	Contact seal
mm	–		–			
45	**FNL 510 A**	**FNL 510 B**	1210 EKTN9 2210 EKTN9 22210 EK C 2210 KTN9	H 210 H 310 H 310 H 310 E	1 FRB 5/90 1 ZW 80 × 90 1 ZW 80 × 90 1 ZW 80 × 90	TFL 510
50	**FNL 511 A**	**FNL 511 B**	1211 EKTN9 2211 EKTN9 22211 EK C 2211 KTN9	H 211 H 311 H 311 H 311 E	1 FRB 6/100 1 ZW 85 × 100 1 ZW 85 × 100 1 ZW 85 × 100	TFL 511
55	**FNL 512 A**	**FNL 512 B**	1212 EKTN9 2212 EKTN9 22212 EK C 2212 KTN9	H 212 H 312 H 312 H 312 E	1 FRB 8/110 1 ZW 90 × 110 1 ZW 90 × 110 1 FRB 2/110	TFL 512
60	**FNL 513 A**	**FNL 513 B**	1213 EKTN9 2213 EKTN9 22213 EK C 2213 KTN9	H 213 H 313 H 313 H 313 E	1 FRB 10/120 1 FRB 2/120 1 FRB 2/120 1 FRB 2/120	TFL 513

[1] Only the basic bearing designation is listed. Other bearing variants can also fit the housing.
12(00), 22(00) – self-aligning ball bearing, 222(00) – spherical roller bearing, C... – CARB toroidal roller bearing
[2] The adapter sleeve fits the bearing in the same row only.
[3] The locating ring or spacing washer fits the bearing in the same row only.

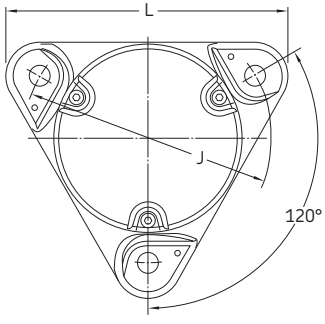

Shaft diameter	**Dimensions** Housing											**Mass** Housing
d_a	A_A	A_B	A_1	B_a	B_b	D_1	H	H_1	J	L	G	
mm	mm											kg
45	77	75	15	22	21	118	160	60	160	179	12	3,50
50	84	82	15	24	23	127	172,5	65	170	192	12	4,30
55	85	83	15	23	22	142	189	72	180	210	12	5,20
60	88	86	15	22	24	152	203	78	190	225	12	6,30

11.1 FNL flanged housings for bearings on adapter sleeves

d_a **65 – 100** mm

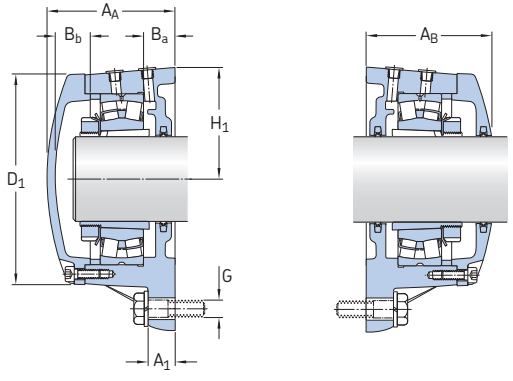

Shaft diameter d_a	**Housing** for shaft end	for through shaft	**Appropriate parts** Bearing[1]	Adapter sleeve[2]	Locating ring or spacing washer[3]	Contact seal
mm	–		–			
65	**FNL 515 A**	**FNL 515 B**	1215 K	H 215	2 FRB 8/130	TFL 515
			2215 EKTN9	H 315	1 FRB 10/130	
			22215 EK	H 315	1 FRB 10/130	
			C 2215 K	H 315 E	1 FRB 10/130	
70	**FNL 516 A**	**FNL 516 B**	1216 K	H 216	2 FRB 8,5/140	TFL 516
			2216 EKTN9	H 316	1 FRB 10/140	
			22216 EK	H 316	1 FRB 10/140	
			C 2216 K	H 316 E	1 FRB 10/140	
75	**FNL 517 A**	**FNL 517 B**	1217 K	H 217	2 FRB 9/150	TFL 517
			2217 K	H 317	1 FRB 10/150	
			22217 EK	H 317	1 FRB 10/150	
			C 2217 K	H 317 E	1 FRB 10/150	
80	**FNL 518 A**	**FNL 518 B**	1218 K	H 218	2 FRB 10/160	TFL 518
			2218 K	H 318	1 FRB 10/160	
			22218 EK	H 318	1 FRB 10/160	
			C 2218 K	H 318 E	1 FRB 10/160	
90	**FNL 520 A**	**FNL 520 B**	1220 K	H 220	1 FRB 10/180[4]	TFL 520
					1 FRB 12/180[4]	
			2220 KM	H 320	1 FRB 10/180	
			22220 EK	H 320	1 FRB 10/180	
			C 2220 K	H 320 E	1 FRB 10/180	
100	**FNL 522 A**	**FNL 522 B**	1222 K	H 222	2 FRB 12,5/200	TFL 522
			2222 KM	H 322	1 FRB 10/200	
			22222 EK	H 322	1 FRB 10/200	
			C 2222 K	H 322 E	1 FRB 10/200	

[1] Only the basic bearing designation is listed. Other bearing variants can also fit the housing.
12(00), 22(00) – self-aligning ball bearing, 222(00) – spherical roller bearing, C... – CARB toroidal roller bearing
[2] The adapter sleeve fits the bearing in the same row only.
[3] The locating ring or spacing washer fits the bearing in the same row only.
[4] One FRB 10/180 and one FRB 12/180 at each side of the bearing.

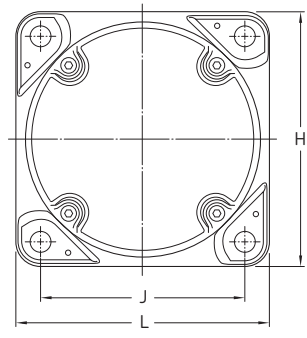

Shaft diameter	**Dimensions** Housing											**Mass** Housing
d_a	A_A	A_B	A_1	B_a	B_b	D_1	H	H_1	J	L	G	
mm	mm											kg
65	106	104	25	30	24	168	190	95	152	190	16	10,0
70	113	110	25	31	27	175	196	98	152	196	16	10,5
75	117,5	115	25	31	27	188	210	105	170	210	16	12,5
80	121	118	25	30	28	196	210	105	170	210	16	12,0
90	130	127	30	30	31	224	250	125	198	250	20	19,0
100	140	137	30	30	33	244	270	135	219	270	20	23,5

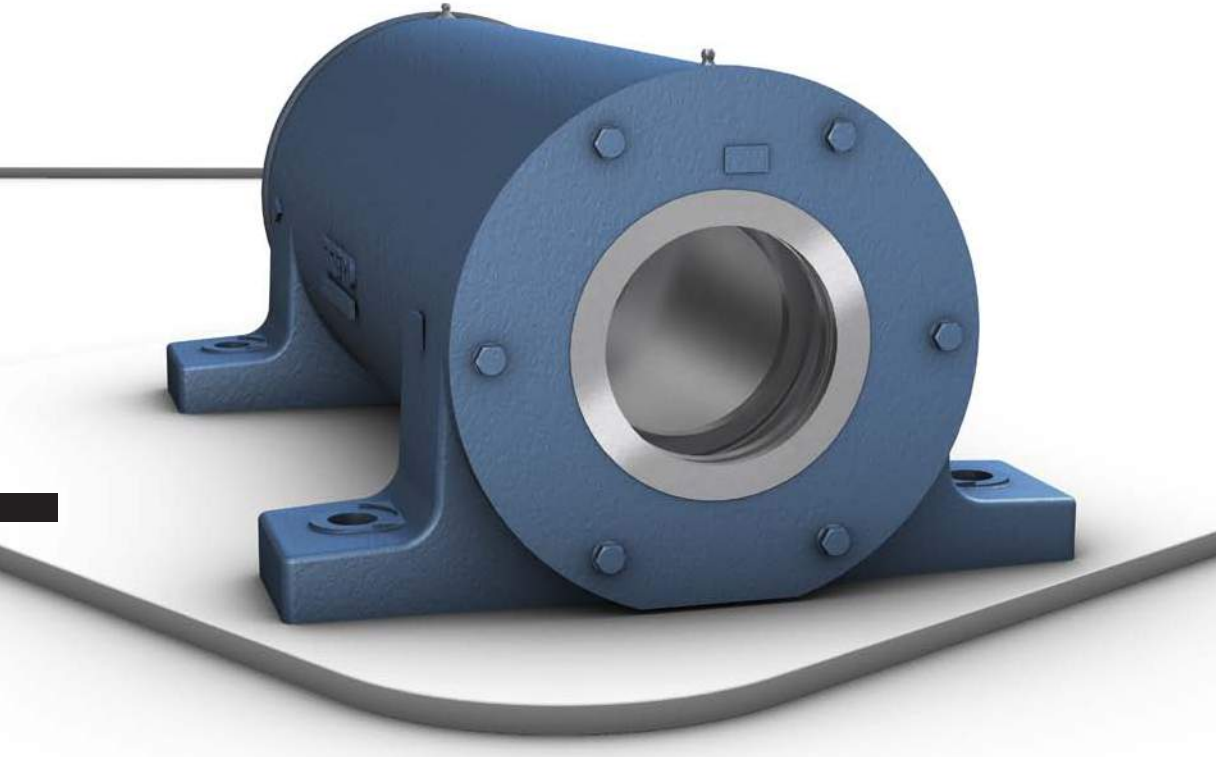

Two-bearing housings PD series

Bearing types
- Single row deep groove ball bearings
- Single row angular contact ball bearings
- Single row cylindrical roller bearings

Bearing dimension series
- 62, 63
- 72, 73
- NU 22, NU 3, NJ 22, NJ 23, NJ 2, NJ 3

Shaft diameter range
- 25 to 120 mm

Shaft-bearing combination
- On a stepped shaft with bearings on a cylindrical seat

Seals
- Felt strip
- V-ring

Lubrication
- Grease
- Oil lubrication (optional)

Materials
- Grey cast iron

Mounting
- Four-bolt mounting

Compliance to standards
- Not standardized

SKF two-bearing housings were originally developed for fan shafts with an overhung impeller, but are also suitable for other applications with similar shaft arrangements.

Compared to the conventional shaft arrangement where two self-aligning bearings are mounted in separate plummer (pillow) block housings, two-bearing housings provide several advantages including improved running accuracy and quieter operation.

PD two-bearing housings can also be supplied as ready-to-mount units.

Two-bearing housings PD series

Designations 555

Standard housing design 557
Features and benefits 557
Housing material 557
Paint, corrosion protection 557
Dimension standards 557

Housing variants 558

Sealing solutions 558

Design considerations 560
Shaft-bearing combinations 560
Standard bearing arrangements . . . 560
Non-standard bearing arrangements 562
Bearing arrangements 564
Load carrying capacity 564
Operating temperature 564
Operating speed 564
Shaft specifications 564
Attachment bolt recommendations 566

Lubrication 567
Flinger rings 567
Initial grease fill 567
Relubrication 567
Oil lubrication 567

Mounting 568
Mounting PDN series housing 568
Mounting PD units 568

Condition monitoring 569

Accessories 569

Ordering information 570
PD two-bearing housings 570
PD two-bearing units 570

Product tables
12.1 Two-bearing housings in the PDN series 572
12.2 Two-bearing housings in the PDP series 576
12.3 Two-bearing housings in the PDR series 578
12.4 Shafts for two-bearing housings in the PDN 2 series 580
12.5 Shafts for two-bearing housings in the PDN 3 series 582
12.6 Shafts for two-bearing housings in the PDP series 584
12.7 Shafts for two-bearing housings in the PDR series 586

Designations

Designation system for PD two-bearing housings

PDR 319

Series

PDN	Housing for normal radial and axial loads
PDP	Housing for predominant or alternating axial loads
PDR	Housing for heavy radial loads

Size identification

2(00)	Housing for bearings in the 62, 72, NU 2, NJ 2, NJ 22, NJ 23, 222 and 223 series
3(00)	Housing for bearings in the 63, 73, NU 3 and NJ 3 series
..(00)	Size code of the bearings, (00) × 5 = bearing bore diameter [mm]

Designation system for shafts

VJ-PDPF 218

Prefix

VJ-	Shaft for two-bearing housings

Series

PDNB	For housings in the PDN series
PDPF	For housings in the PDP series
PDRJ	For housings in the PDR series

Size identification

...	Size identification of the housing

Two-bearing housings PD series

Designation system for PD two-bearing units

PDPF 220
PDNB 305 DD

Housing series

PDN	Housing for normal radial and axial loads
PDP	Housing for predominant or alternating axial loads
PDR	Housing for heavy radial loads

Size identification

	Non-locating bearing position	Locating bearing position	Housing series
A	Deep groove ball bearing	Two angular contact ball bearings	PDN
B[1)]	Deep groove ball bearing	Deep groove ball bearing	PDN
D	Cylindrical roller bearing	Cylindrical roller bearing	PDN
E	Cylindrical roller bearing	Deep groove ball bearing	PDN
F[1)]	Cylindrical roller bearing	Two angular contact ball bearings	PDN, PDP
J[1)]	Cylindrical roller bearing	Cylindrical roller bearing + Deep groove ball bearing	PDR
L	Spherical roller bearing	Spherical roller bearing	PDN

Size identification

2(00)	Housing for bearings in the 62, 72, NU 2, NJ 2, NJ 22, NJ 23, 222 and 223 series
3(00)	Housing for bearings in the 63, 73, NU 3 and NJ 3 series
..(00)	Size code of the bearings, (00) x 5 = bearing bore diameter [mm]

Suffixes

DD	Unit supplied with shaft spacers and a large bore in the covers at both sides
U	Unit supplied without shaft spacers (PDP and PDR units only)

[1)] Standard units include PDNB, PDPF and PDRJ

Fig. 1

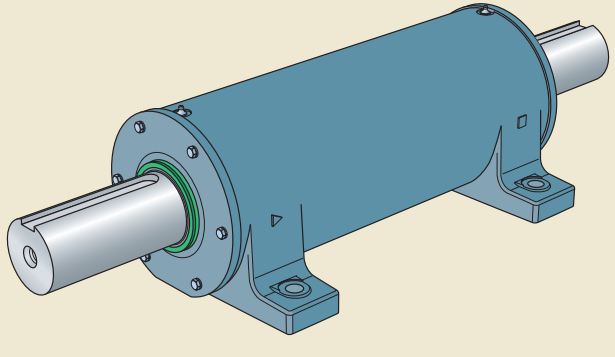

Standard housing design

PD two-bearing housings are non-split housings with two bearing seats (→ **fig. 1**). They consist of a housing body and two covers that are bolted to the body with either four or six bolts. The housings have four holes drilled into the feet for attachment bolts.

PD housings are available in three series, each similar in their external design, but accommodating different bearing arrangements:

- PDN series, for normal radial and axial loads
- PDP series, for predominant or alternating axial loads
- PDR series, for heavy radial and normal axial loads

Features and benefits

PD housings have the following features and benefits:

Compact design

The bearings are incorporated in one housing, which saves space.

Smooth running

The two bearing seats are concentric. Since bearing misalignment is avoided, rigid bearings can be used. The resulting stiff arrangement provides a high degree of running accuracy and enables high speeds.

Quiet operation

The accurate alignment of the rigid bearings in one housing enables quiet operation. For units with the designation PDNB, a wave spring washer in the smaller housing range further reduces noise levels.

Available as units

PD housings can also be supplied as units, complete with bearings and shaft. These ready-to-mount units are assembled and greased at the factory, saving time and reducing the risk of contaminating or damaging the bearings during assembly.

Easy handling

Large housings have two eye bolts for safe and easy handling.

Housing material

PD two-bearing housings and their covers are made of grey cast iron.

Paint, corrosion protection

PD housings are painted blue (RAL 5007) using a solvent based alkyd paint. The paint protects the housing in accordance with ISO 12944-2, corrosivity category C2 (i.e. exterior atmospheres with low levels of pollution, interior atmospheres where condensation may occur). The paint is not affected by most lubricating or engine oils, cutting fluids or alkalescent washing chemicals. Housings can be repainted with most water or solvent based 1- or 2-component paints.

Unpainted surfaces are protected with a solventless rust inhibitor.

Dimension standards

The dimensions of PD two-bearing housings are not standardized either nationally or internationally.

Housing variants

In addition to standard design PD housings, the following variants are available on request:

- housings for oil bath or circulating oil lubrication systems
- housings for vertical shaft arrangements

For additional information, contact the SKF application engineering service.

Sealing solutions

PD two-bearing housings are designed for two sealing solutions:

- a V-ring seal, for housings in the PDN 2 and PDP series (→ **fig. 2**)
- a felt strip and a V-ring seal, for housings in the PDN 3 and PDR series (→ **fig. 3**)

Table 1, provides an overview of the properties and suitability of each sealing solution. This information should be used as a guideline, which cannot substitute for testing the seal in its application.

Housings in the PDN 3 and PDR series have felt strips, which are mounted in a groove in the cover. At circumferential speeds above 4 m/s, a small gap forms between the felt and the seal counterface.

The outboard V-ring seals (for all housing series) provide additional protection against contaminants. They can accommodate circumferential speeds up to 7 m/s.

PD housings are supplied with seals but the seals can also be ordered separately.

Fig. 2

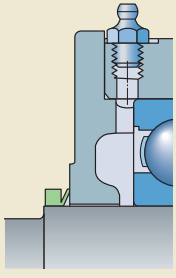

Fig. 3

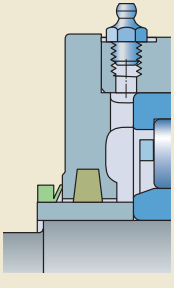

Table 1

Standard seals for PD two-bearing housings

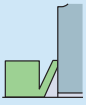

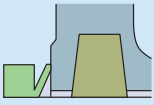

Seal		
Type	V-ring seal	Felt strip and V-ring seal
Housing series	PDN 2, PDP	PDN 3, PDR
Material	nitrile rubber	felt, nitrile rubber
Application conditions and requirements		
Temperature [°C]	–40 to +100	–40 to +100
Temperature [°F]	–40 to +210	–40 to +210
Max. circumferential speed[1] [m/s]	7[2]	4[3]
Low friction	++	–
Shaft tolerance class	→ **page 564**	→ **page 564**
Shaft roughness R_a [µm]	3,2	3,2
Sealing suitability		
Dust	+	+
Fine particles	+	+
Coarse particles	+	+
Chips	––	+
Liquids when sprayed	+	+
Direct sunlight	––	+

Symbol: ++ very suitable
+ suitable
– limited suitability
–– unsuitable

1) To convert circumferential speeds to rotational speeds, refer to **table 7** on **page 37**.
2) If located axially, higher speeds are possible.
3) At higher speeds, a small gap forms between the felt and the shaft.

Design considerations

For general information about system design, refer to the following sections:

- *Shaft seat tolerances* (→ skf.com/bearings)
- *Load carrying capacity* (→ **page 44**)
- *Specifications for shafts and housing support surfaces* (→ **page 45**)

For additional information about rolling bearings, refer to the product information available online at skf.com/bearings.

Shaft-bearing combinations

PD two-bearing housings accommodate bearings on a cylindrical seat on stepped shafts.

Standard bearing arrangements

PD two-bearing housings can accommodate different bearing arrangements, depending on the series.

Housings in the PDN series

The bearing arrangement for housings in the PDN series comprises:

- two single row deep groove ball bearings in the 62 series for housings in the PDN 2 series (→ **fig. 4**)
- two single row deep groove ball bearings in the 63 series for housings in the PDN 3 series (→ **fig. 5**)

The bearing arrangements are intended for normal load conditions and relatively high speed operation. The arrangement for housings in the PDN 3 series can accommodate heavier loads than PDN 2 series housings.

A wave spring washer, supplied with housings up to size 218 or 316, preloads the bearings against each other to reduce noise levels. Units with spring-loaded bearings can accommodate axial loads in one direction only (→ *Mounting*, **page 568**).

Housings in the PDN series can also be used for other bearing combinations (→ *Non-standard bearing arrangements*, **page 562**).

Housings in the PDP series

The bearing arrangement for housings in the PDP series comprises (→ **fig. 6**):

- a single row cylindrical roller bearing in the NU 22 ECP series, in the non-locating bearing position
- a pair of universally matchable single row angular contact ball bearings in the 72 series, mounted back-to-back in the locating bearing position

This bearing arrangement accommodates axial loads in both directions and can support heavier loads than bearings in PDN series housings.

Housings in the PDP series can also accommodate other bearing combinations.

Fig. 4

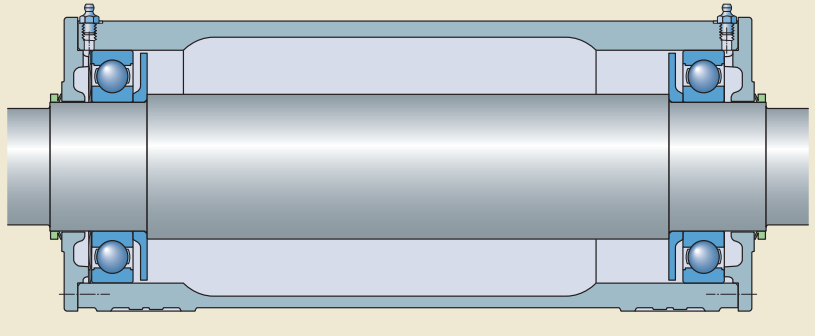

Fig. 5

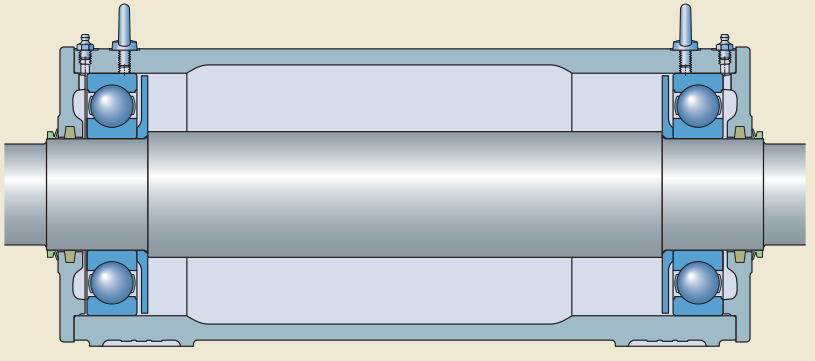

Fig. 6

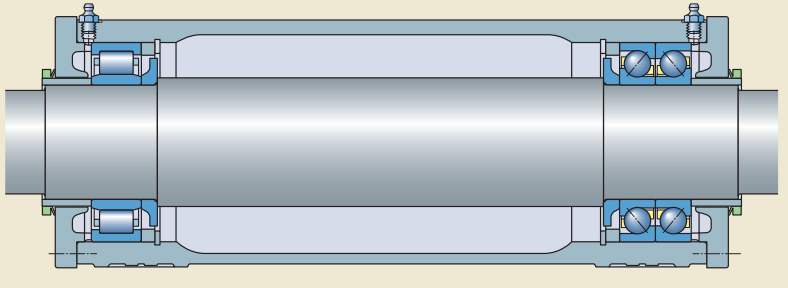

Housings in the PDR series

The bearing arrangement for housings in the PDR series comprises (→ **fig. 7**):

- a single row cylindrical roller bearing in the NU 3 ECP series, in the non-locating bearing position
- a cylindrical roller bearing in the NU 3 ECP series in combination with a single row deep groove ball bearing in the 63 series (with C3 clearance), in the locating bearing position

The deep groove ball bearing acts as a pure thrust bearing, accommodating the axial loads in both directions, and is mounted with radial clearance in the housing. To prevent the outer ring from turning, an O-ring is inserted in a groove in the cover that abuts the outer ring.

The bearings support heavier radial loads than bearings in both PDN and PDP series housings.

Non-standard bearing arrangements

Housings in the PDN series are designed to accommodate two deep groove ball bearings. For special applications, the housings can be fitted with various combinations of deep groove ball bearings, angular contact ball bearings, cylindrical roller bearings and spherical roller bearings.

SKF can supply the following combinations, available as assembled units (→ **fig. 8**):

- PDNA .. DD units, incorporating a deep groove ball bearing in the non-locating bearing position and a pair of universally matchable angular contact ball bearings, mounted back-to-back, in the locating bearing position. Smaller housings accommodate axial loads in only one direction, while larger housings can withstand axial loads in both directions (**a**)
- PDND units, incorporating an NJ design cylindrical roller bearing on each end to form a cross-located ("floating") bearing arrangement (**b**)
- PDNE units, an NJ design cylindrical roller bearing and a deep groove ball bearing to form a cross-located ("floating") bearing arrangement (**c**)
- PDNF .. DD units, incorporating an NJ design cylindrical roller bearing and a pair of universally matchable angular contact ball bearings, mounted back-to-back, to form a cross-located ("floating") bearing arrangement (**d**)
- PDNL units, incorporating a spherical roller bearing on each end to form a cross-located ("floating") bearing arrangement (**e**)

Fig. 7

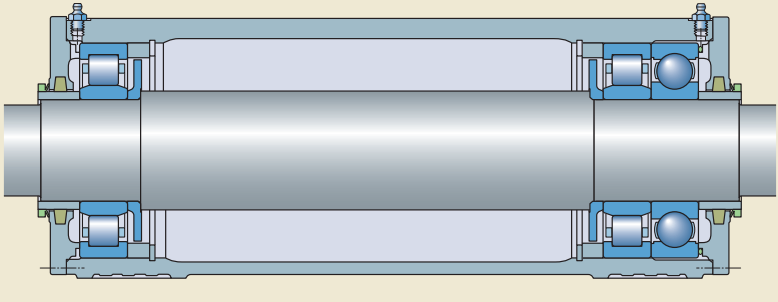

Fig. 8

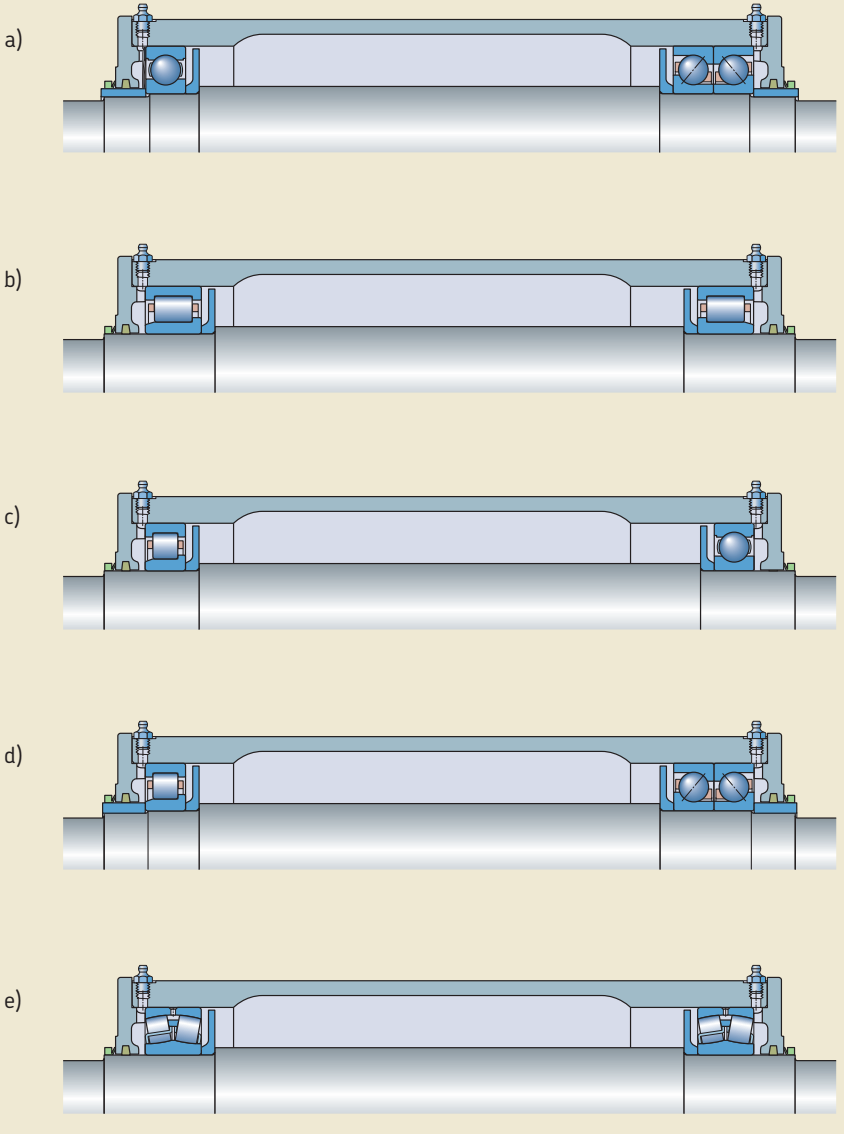

Bearing arrangements

Typically, PD two-bearing housings accommodate a locating and a non-locating bearing. In some applications, however, both bearings are used to locate the shaft axially, each in one direction. This is called a cross-located ("floating") bearing arrangement.

Load carrying capacity

PD two-bearing housings are intended for loads acting perpendicularly toward the support surface. If the housing is supported over its four feet and the loads are purely perpendicular, loads are limited only by the bearings.

Housings in the PDN series that have bearings preloaded with a wave spring washer accommodate axial loads in one direction only.

Operating temperature

The permissible operating temperature is mainly limited by the seals and lubricant. For temperature limits of SKF bearings and lubricants, refer to the product information available online at skf.com/bearings. For temperature limits of the seals used in PD housings, refer to **table 1** on **page 559**.

The housing material does not set any additional temperature limits, except for very low temperature applications where impact strength could be a factor.

The housing paint is heat resistant up to 80 °C *(175 °F)* material temperature or 100 °C *(210 °F)* ambient temperature.

When temperatures outside the permissible range are expected, contact the SKF application engineering service.

Operating speed

The permissible operating speed of the incorporated bearings is limited by the V-ring and felt seals, but not by the housing. Speed limits of the seals are listed in **table 1** on **page 559**.

Shaft specifications

Shafts for two-bearing housings can be machined according to the recommended dimensions provided in **product tables 13.4** to **13.7**. The bearing seats should be machined to the tolerance classes listed in **table 2**. The accuracy of form should be to tolerance grade IT5 for shaft diameters up to and including 60 mm and IT6 for larger diameter shafts. At the seal position, the shaft (or shaft sleeve) should comply with the same tolerance classes as the bearing seat.

SKF also supplies pre-machined shafts to fit PD housings. Their designations are provided in the product tables. The bearing seats and shaft ends are machined to the tolerance classes listed in **table 2** and **table 3** respectively.

Shafts are supplied with two keys and two end plates with attachment screws.

Table 2

Bearing seat tolerance classes

Shaft diameter d_a over	incl.	Tolerance class[1] for housing series PDN	PDP with angular contact ball bearings	cylindrical roller bearings	PDR
mm		–			
–	**100**	k6	k6	m6	m6
100	**–**	k6	m6	m6	m6

[1] The recommended tolerance classes are intended for light loaded bearings only (P < 0,05 C, see also skf.com/bearings). Tighter fits are required for heavier loads. For additional information, contact the SKF application engineering service.

12

Table 3

Shaft end specifications

Shaft end diameter d_b over	incl.	Tolerance class for housing series PDN	PDP	PDR
mm		–		
–	**30**	j6	m6	m6
30	**50**	k6	m6	m6
50	**110**	m6	m6	m6

Attachment bolt recommendations

In typical applications, 8.8 class hexagon head bolts in accordance with ISO 4014 can be used together with washers. If loads do not act perpendicularly towards the support surface, it may be necessary to use stronger, 10.9 class bolts.

SKF housings can withstand loads resulting from tightening the attachment bolts to the values recommended by bolt manufacturers (→ **table 4**). They are valid for oiled, but otherwise untreated thread surfaces. SKF cannot confirm that tightening to the recommended value will provide sufficient anchoring. Make sure that attachment bolts and a sufficiently strong support can accommodate all occurring loads.

Table 4

Cover bolts and attachment bolts

Housing series				Cover bolts		Attachment bolts	
PDN 2	PDN 3	PDP	PDR	Size	Tightening torque	Size	Tightening torque[1]
–				–	Nm	–	Nm
PDN 206	**PDN 305**			M 6x20	10	M 10	50
PDN 207	**PDN 306**			M 6x20	10	M 12	80
PDN 208	**PDN 307**			M 6x20	10	M 12	80
PDN 210	**PDN 308**			M 6x20	10	M 12	80
PDN 211	**PDN 309**			M 6x20	10	M 12	80
PDN 212	**PDN 310**			M 6x20	10	M 12	80
PDN 214	**PDN 311**			M 8x25	25	M 16	200
PDN 215	**PDN 312**	**PDP 2214**		M 8x25	25	M 16	200
PDN 216	**PDN 313**	**PDP 2216**		M 8x25	25	M 16	200
	PDN 314			M 8x25	25	M 16	200
PDN 218	**PDN 315**	**PDP 2218**	**PDR 315**	M 8x30	25	M 16	200
	PDN 316		**PDR 316**	M 10x30	50	M 16	200
PDN 220	**PDN 317**	**PDP 2220**	**PDR 317**	M 10x30	50	M 16	200
	PDN 318		**PDR 318**	M 10x30	50	M 16	200
PDN 222	**PDN 319**	**PDP 2222**	**PDR 319**	M 10x35	50	M 20	385
PDN 224	**PDN 320**	**PDP 2224**	**PDR 320**	M 12x35	80	M 20	385
	PDN 322		**PDR 322**	M 12x35	80	M 24	665
	PDN 324		**PDR 324**	M 12x35	80	M 30	1 310

[1] Recommended by bolt manufacturers.

Lubrication

Standard PD two-bearing housings are designed for grease lubrication. Housings for oil lubrication are available on request.

The lubricant should be selected based on the operating conditions of the bearings. For additional information about lubricant selection, refer to the product information available online at skf.com.

Flinger rings

PD housings are supplied with inboard flinger rings made of grey cast iron (→ **fig. 9**). The flinger rings serve to retain grease at the bearing position and to prevent over-lubrication. The excess grease is collected in the large space in the middle of the housing.

Initial grease fill

If no other requirements exist, the free space in the bearings should be completely filled with grease and the free space between the cover and flinger ring should be filled to 100%.

Initial grease fill for PD units

PD units are greased at the factory with SKF LGMT 2, a high-quality mineral oil based grease with a lithium thickener and good rust inhibiting properties. The operating temperature range of the grease is –30 to +110 °C *(–20 to +230 °F)*.

Relubrication

Relubrication is possible via two G 1/4 or G 1/8 grease fittings (depending on size), one on each end of the housing (→ **fig. 10**). There is minimal risk of over-greasing because excess grease is collected in the large space in the middle of the housing. When applying grease via the grease fittings, the shaft should be rotating.

SKF recommends replenishing the housings with SKF LGMT 2, a high-quality mineral oil based grease with a lithium thickener and good rust inhibiting properties. For vertical shaft arrangements, SKF LGMT 3 grease should be used with half the interval required for a similar horizontal application.

To calculate the relubrication interval and the quantity of grease needed for replenishment, refer to the SKF catalogue *Rolling bearings* or skf.com/bearings.

Oil lubrication

Where high speeds preclude the use of grease as a lubricant, large PD housings can be modified for oil bath or circulating oil lubrication systems. The housings are fitted with special oil seals. For additional information, contact the SKF application engineering service.

Fig. 9

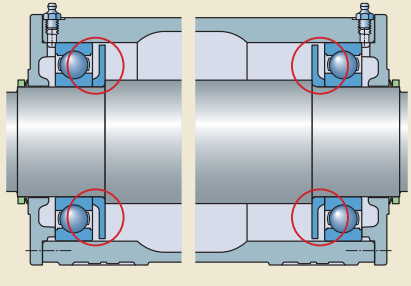

Fig. 10

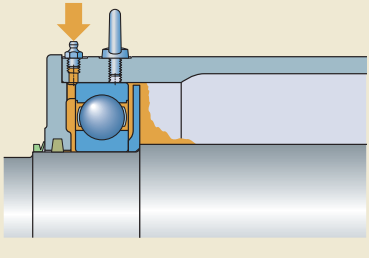

Mounting

PD housings must be mounted properly, using the correct tools. All the associated components must meet certain basic requirements and the support surface should meet the specifications provided under *Housing support surfaces* (→ **page 45**).

The housings have two markings (→ **fig. 11**):

- A "square" on one end denotes the position of the wider of the two bearing seats.
- A "triangle" on the other end indicates the direction in which the predominant axial load should be applied.

For information about mounting rolling bearings, refer to the *SKF bearing maintenance handbook* or skf.com/mount.

Mounting PDN series housings

The wave spring washers, supplied with smaller housings in the PDN series, should be inserted between the bearing and the cover on the housing end marked with a triangle. The rotary components (impeller, pulley, coupling etc.) must be arranged so that the axial load F_a produced in operation acts in the direction indicated by the triangle. SKF recommends using a hydraulic nut or press for these mounting operations.

Mounting PD units

Installing PD units is simple because the unit just needs to be bolted to the support surface. The rotary components are then mounted onto the finished shaft ends secured by the keys, end plates, and attachment screws (with spring washers) provided.

Support the shaft properly when pressing components onto the shaft to prevent the mounting force acting on the bearings. Mounting instructions are available on request.

Torque specifications

Cover bolts should be tightened to the torque values listed in **table 4** on **page 566**. The cover bolts are in accordance with ISO 4017.

For information about attachment bolts, refer to *Attachment bolt recommendations* on **page 566**.

Fig. 11



Condition monitoring

If connections for condition monitoring sensors are required, contact the SKF application engineering service.

Accessories

The following accessories are available for PD two-bearing housings:

- Automatic lubricators: SKF SYSTEM 24 and SKF MultiPoint
- Grease meter: LAGM 1000E

For additional information, refer to *SKF tools and products* (→ **page 47**).

Ordering information

PD two-bearing housings

Housings in the PDN series are supplied with the following components:

- housing
- 2 covers, including 8 or 12 hexagon head bolts and spring washers depending on size
- 2 flinger rings
- 1 wave spring washer (up to and including size 218 for housings in the PDN 2 series, and size 316 for housings in the PDN 3 series)
- 2 seals (V-ring seals for housings in the PDN 2 series; V-ring seals and felt strips for housings in the PDN 3 series)

Housings in the PDP series are supplied with the following components:

- housing, including 2 eye bolts for housings size 224
- 2 covers, including 12 hexagon head bolts and washers
- 2 flinger rings
- 2 locating rings
- 2 spacer sleeves
- 2 shaft sleeves
- 2 V-ring seals

Housings in the PDR series are supplied with the following components:

- housing, including 2 eye bolts for housings from sizes 320 to 324
- 2 covers, including 12 hexagon head bolts and washers
- 2 flinger rings
- 2 spacer sleeves
- 2 shaft sleeves
- 2 seals (V-ring seals and felt strips)
- 1 O-ring

The bearings and shaft must be ordered separately. Shafts are supplied with two keys, and two end plates with attachment screws and spring washers.

Housings in the PDP and PDR series can be supplied without shaft sleeves. They are identified by the designation suffix U, e.g. PDR 315 U.

Order example

One PD housing is required for two 6309 bearings. The following components should be ordered:

- 1 housing PDN 309
- 1 shaft VJ-PDNB 309
- 2 bearings 6309

PD two-bearing units

PD units are supplied assembled and ready-to-mount, complete with bearings and shaft.

Order example

One PD housing is required for two 6309 bearings. The following items should be ordered:

- 1 unit PDNB 309

12

12.1 Two-bearing housings in the PDN series
d_a **25 – 80** mm

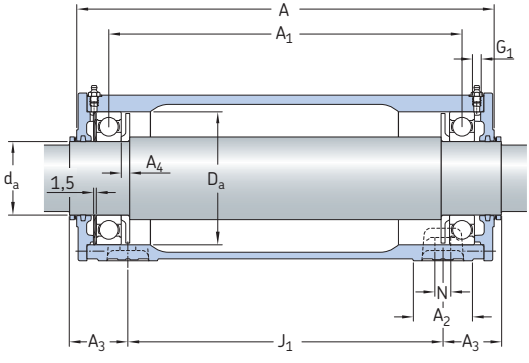

PDNB 3

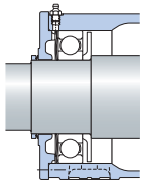

PDNB 2

Shaft diameter d_a	Housing Designation[1]	Appropriate parts Bearings	Shaft	Wave spring washer	Spare parts V-ring	Felt strip	Unit Designation[1]
mm	–	–			–		–
25	**PDN 305**	2 x 6305	VJ-PDNB 305	WF-62	25 VA R	FS 190	**PDNB 305**
30	**PDN 206**	2 x 6206	VJ-PDNB 206	WF-62	30 VA R	–	**PDNB 206**
	PDN 306	2 x 6306	VJ-PDNB 306	WF-72	30 VA R	FS 190	**PDNB 306**
35	**PDN 207**	2 x 6207	VJ-PDNB 207	WF-72	35 VA R	–	**PDNB 207**
	PDN 307	2 x 6307	VJ-PDNB 307	WF-80	35 VA R	FS 190	**PDNB 307**
40	**PDN 208**	2 x 6208	VJ-PDNB 208	WF-80	40 VA R	–	**PDNB 208**
	PDN 308	2 x 6308	VJ-PDNB 308	WF-90	40 VA R	FS 190	**PDNB 308**
45	**PDN 309**	2 x 6309	VJ-PDNB 309	WF-100	45 VA R	FS 190	**PDNB 309**
50	**PDN 210**	2 x 6210	VJ-PDNB 210	WF-90	50 VA R	–	**PDNB 210**
	PDN 310	2 x 6310	VJ-PDNB 310	WF-110	50 VA R	FS 260	**PDNB 310**
55	**PDN 211**	2 x 6211	VJ-PDNB 211	WF-100	55 VA R	–	**PDNB 211**
	PDN 311	2 x 6311	VJ-PDNB 311	WF-120	55 VA R	FS 260	**PDNB 311**
60	**PDN 212**	2 x 6212	VJ-PDNB 212	WF-110	60 VA R	–	**PDNB 212**
	PDN 312	2 x 6312	VJ-PDNB 312	WF-130	60 VA R	FS 260	**PDNB 312**
65	**PDN 313**	2 x 6313	VJ-PDNB 313	WF-140	65 VA R	FS 260	**PDNB 313**
70	**PDN 214**	2 x 6214	VJ-PDNB 214	WF-125	70 VA R	–	**PDNB 214**
	PDN 314	2 x 6314	VJ-PDNB 314	WF-150	70 VA R	FS 330	**PDNB 314**
75	**PDN 215**	2 x 6215	VJ-PDNB 215	WF-130	75 VA R	–	**PDNB 215**
	PDN 315	2 x 6315	VJ-PDNB 315	WF-160	75 VA R	FS 330	**PDNB 315**
80	**PDN 216**	2 x 6216	VJ-PDNB 216	WF-140	80 VA R	–	**PDNB 216**
	PDN 316	2 x 6316	VJ-PDNB 316	WF-170	80 VA R	FS 330	**PDNB 316**

[1] For details about the components supplied, refer to the section *Ordering information* on **page 570**.

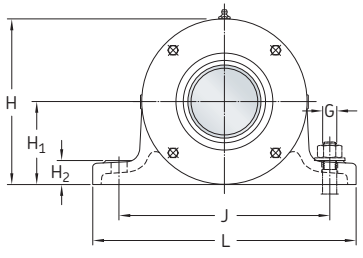

Sizes up to and including 211 and 309

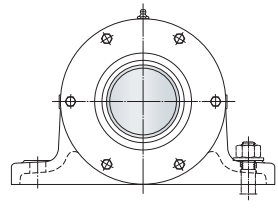

Sizes from 212 and 310

Shaft diameter	Dimensions Housing															Mass Housing	Unit
d_a	A	A_1	A_2	A_3	A_4	D_a	H	H_1 JS11	H_2	J	J_1	L	N	G	G	G_1		
mm	mm														in.	–	kg	
25	202	146,5	35	40,5	7	62	95	50	16	120	135	155	12	10	3/8	G1/8	5,1	7
30	197	147,5	35	37,5	7	62	95	50	16	120	135	155	12	10	3/8	G1/8	5,1	7,4
	226	171,5	40	45	7	72	100	50	18	130	150	160	15	12	1/2	G1/8	6,5	9,6
35	227	173,5	40	45	7	72	100	50	18	130	150	160	15	12	1/2	G1/8	6,5	10
	260	195,5	45	49,5	8	80	116	60	18	150	175	190	15	12	1/2	G1/8	9,1	13,5
40	259	198,5	45	49,5	8	80	116	60	18	150	175	190	15	12	1/2	G1/8	9,3	14,5
	315	255,5	52	53	10	90	121	60	20	150	225	190	15	12	1/2	G1/8	12,5	19,5
45	360	279,5	52	63	10	100	137	70	22	170	250	210	15	12	1/2	G1/8	15	24,5
50	314	258,5	52	52	10	90	121	60	20	150	225	190	15	12	1/2	G1/8	12,5	22,5
	377	311,5	60	59	10	110	142	70	25	170	275	210	15	12	1/2	G1/8	18	29,5
55	356	283,5	52	60,5	10	100	137	70	22	170	250	210	15	12	1/2	G1/8	15	27,5
	422	335,5	60	69	10	120	158	80	25	210	300	260	19	16	5/8	G1/8	23	39,5
60	376	316,5	60	58	10	110	142	70	25	170	275	210	15	12	1/2	G1/8	18	33
	460	383,5	70	68	10	130	165	80	25	210	340	260	19	16	5/8	G1/8	32,5	52,5
65	492	402,5	70	74	11	140	185	95	25	230	360	280	19	16	5/8	G1/4	32	57
70	459	390,5	70	69	10	125	165	80	25	210	340	260	19	16	5/8	G1/8	34,5	60,5
	512	420,5	70	76	11	150	190	95	25	230	380	290	19	16	5/8	G1/4	38	68,5
75	459	389,5	70	69	10	130	165	80	25	210	340	260	19	16	5/8	G1/8	32	62
	547	448,5	80	83,5	12	160	200	100	30	260	400	320	19	16	5/8	G1/4	43,5	80,5
80	493	409,5	70	76	11	140	185	95	25	230	360	280	19	16	5/8	G1/4	31	67
	556	466,5	80	78	12	170	220	112	30	260	420	320	19	16	5/8	G1/4	49,5	92

12.1 Two-bearing housings in the PDN series
d_a 85 – 120 mm

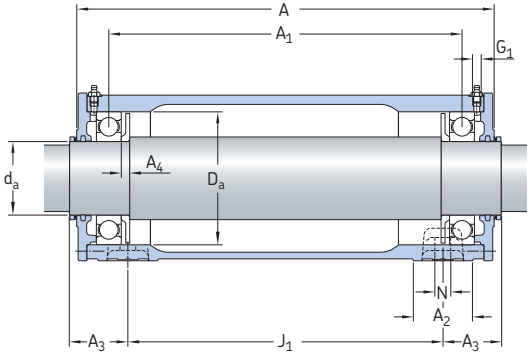

PDNB 3

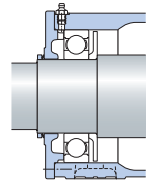

PDNB 2

Shaft diameter d_a	Housing Designation[1]	Appropriate parts Bearings	Shaft	Wave spring washer	Spare parts V-ring	Felt strip	Unit Designation[1]
mm	–	–			–		–
85	**PDN 317**	2 x 6317	VJ-PDNB 317	–	85 VA R	FS 330	**PDNB 317**
90	**PDN 218**	2 x 6218	VJ-PDNB 218	WF-160	90 VA R	–	**PDNB 218**
	PDN 318	2 x 6318	VJ-PDNB 318	–	90 VA R	FS 370	**PDNB 318**
95	**PDN 319**	2 x 6319	VJ-PDNB 319	–	95 VA R	FS 370	**PDNB 319**
100	**PDN 220**	2 x 6220	VJ-PDNB 220	–	100 VA R	–	**PDNB 220**
	PDN 320	2 x 6320	VJ-PDNB 320	–	100 VA R	FS 460	**PDNB 320**
110	**PDN 222**	2 x 6222	VJ-PDNB 222	–	110 VA R	–	**PDNB 222**
	PDN 322	2 x 6322	VJ-PDNB 322	–	110 VA R	FS 460	**PDNB 322**
120	**PDN 224**	2 x 6224	VJ-PDNB 224	–	120 VA R	–	**PDNB 224**
	PDN 324	2 x 6324	VJ-PDNB 324	–	120 VA R	FS 460	**PDNB 324**

[1] For details about the components supplied, refer to the section *Ordering information* on **page 570**.

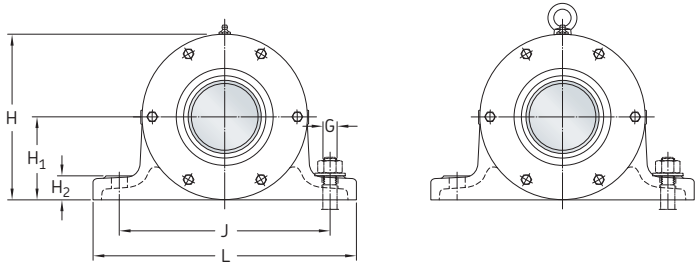

Sizes 224, and 320 and above (with M10 eye bolt)

Shaft diameter	**Dimensions** Housing																**Mass** Housing	Unit
d_a	A	A_1	A_2	A_3	A_4	D_a	H	H_1 JS11	H_2	J	J_1	L	N	G	G	G_1		
mm	mm														in.	–	kg	
85	590	486	80	85	12	180	225	112	30	290	440	350	19	16	5/8	G 1/4	61	114
90	543	455,5	80	81	12	160	200	100	30	260	400	320	19	16	5/8	G 1/4	42,5	96,5
	605	510	85	82,5	11	190	230	112	30	290	460	350	19	16	5/8	G 1/4	71	134
95	648	540	90	94	13	200	253	125	36	320	480	400	24	20	3/4	G 1/4	82,5	156
100	588	493	80	83,5	12	180	225	112	30	290	440	350	19	16	5/8	G 1/4	60	130
	673	570	95	96,5	11,5	215	264	130	40	320	500	400	24	20	3/4	G 1/4	92,5	177
110	634	547	90	88	13	200	253	125	36	320	480	400	24	20	3/4	G 1/4	81	176
	686	580	95	94,5	10	240	296	150	40	380	520	450	28	24	1	G 1/4	115	226
120	672	577	95	97	11,5	215	264	130	40	320	500	400	24	20	3/4	G 1/4	90	207
	707	600	100	96	11,5	260	322	160	40	410	538	500	35	30	1 1/4	G 1/4	135	276

12.2 Two-bearing housings in the PDP series
d_a 70 – 120 mm

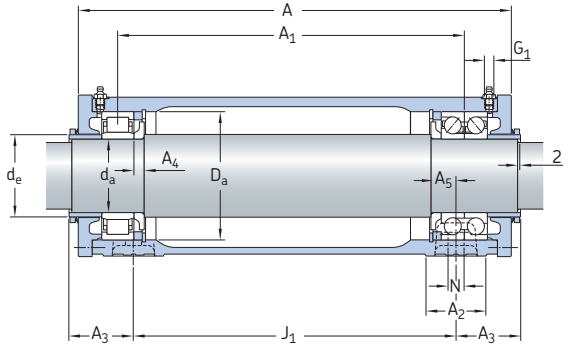

Shaft diameter	Housing Designation[1]	Appropriate parts Bearings in the locating position	Bearing in the non-locating position	Shaft	V-ring	Unit Designation[1]	Dimensions Housing	
d_a							A	A_1
mm	–	–		–		–	mm	
70	**PDP 214**	2 x 7214 BECBP	NU 2214 ECP	VJ-PDPF 2214	80 VA R	**PDPF 2214**	459	376,5
80	**PDP 216**	2 x 7216 BECBP	NU 2216 ECP	VJ-PDPF 2216	90 VA R	**PDPF 2216**	493	394,5
90	**PDP 218**	2 x 7218 BECBP	NU 2218 ECP	VJ-PDPF 2218	100 VA R	**PDPF 2218**	543	437
100	**PDP 220**	2 x 7220 BECBP	NU 2220 ECP	VJ-PDPF 2220	110 VA R	**PDPF 2220**	585	470
110	**PDP 222**	2 x 7222 BECBP	NU 2222 ECP	VJ-PDPF 2222	120 VA R	**PDPF 2222**	634	520,5
120	**PDP 224**	2 x 7224 BCBM	NU 2224 ECP	VJ-PDPF 2224	130 VA R	**PDPF 2224**	672	548

[1] For details about the components supplied, refer to the section *Ordering information* on **page 570**.

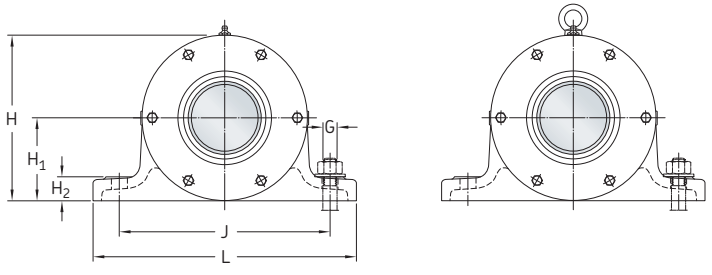

Size 224 (with M10 eye bolt)

Shaft diameter	**Dimensions** Housing															**Mass** Housing	Unit
d_a	A_2	A_3	A_4	A_5	d_e	D_a	H	H_1 JS11	H_2	J	J_1	L	N	G	G_1		
mm	mm													in.	–	kg	
70	70	69	10	20	79	125	165	80	25	210	340	260	19	16	5/8	G 1/8	35	63
80	70	76	11	24,5	90	140	185	95	25	230	360	280	19	16	5/8	G 1/4	32	70,5
90	80	81	12	28,5	100	160	200	100	30	260	400	320	19	16	5/8	G 1/4	43,5	100
100	80	83,5	12	36,5	112	180	225	112	30	290	440	350	19	16	5/8	G 1/4	61,5	137
110	90	88	13	36,5	122	200	253	125	36	320	480	400	24	20	3/4	G 1/4	82,5	185
120	95	97	11,5	33	132	215	264	130	40	320	500	400	24	20	3/4	G 1/4	92	219

12.3 Two-bearing housings in the PDR series
d_a **75 – 120** mm

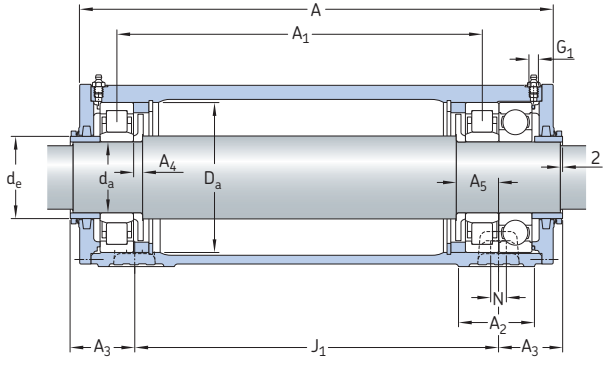

Shaft diameter d_a	**Housing** Designation[1]	**Appropriate parts** Bearings in the locating position	Bearing in the non-locating position	Shaft	**Spare parts** V-ring	Felt strip	**Unit** Designation[1]
mm	–	–			–		–
75	**PDR 315**	NU 315 ECP + 6315/C3	NU 315 ECP	VJ-PDRJ 315	90 VA R	FS 370	**PDRJ 315**
80	**PDR 316**	NU 316 ECP + 6316/C3	NU 316 ECP	VJ-PDRJ 316	95 VA R	FS 370	**PDRJ 316**
85	**PDR 317**	NU 317 ECP + 6317/C3	NU 317 ECP	VJ-PDRJ 317	100 VA R	FS 460	**PDRJ 317**
90	**PDR 318**	NU 318 ECP + 6318/C3	NU 318 ECP	VJ-PDRJ 318	100 VA R	FS 460	**PDRJ 318**
95	**PDR 319**	NU 319 ECP + 6319/C3	NU 319 ECP	VJ-PDRJ 319	110 VA R	FS 460	**PDRJ 319**
100	**PDR 320**	NU 320 ECP + 6320/C3	NU 320 ECP	VJ-PDRJ 320	120 VA R	FS 460	**PDRJ 320**
110	**PDR 322**	NU 322 ECP + 6322/C3	NU 322 ECP	VJ-PDRJ 322	130 VA R	FS 510	**PDRJ 322**
120	**PDR 324**	NU 324 ECP + 6324/C3	NU 324 ECP	VJ-PDRJ 324	140 VA R	FS 680	**PDRJ 324**

[1] For details about the components supplied, refer to the section *Ordering information* on **page 570**.

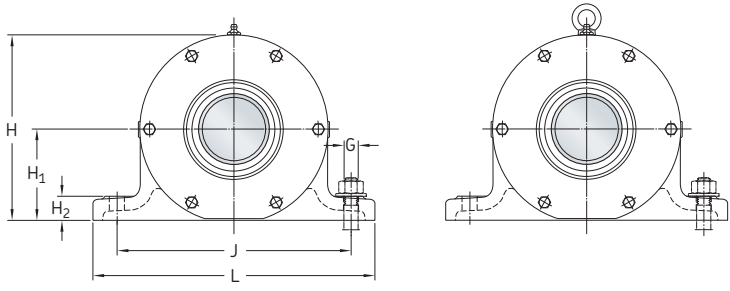

Size 320 and above (with M10 eye bolt)

Shaft diameter	Dimensions Housing																		Mass Housing	Unit
d_a	A	A_1	A_2	A_3	A_4	A_5	d_e	D_a	H	H_1 JS11	H_2	J	J_1	L	N	G	G	G_1		
mm	mm																in.	–	kg	
75	531	414	80	75,5	12	42	90	160	200	100	30	260	400	320	19	16	5/8	G 1/4	45	85,5
80	552	430	80	76	12	46	95	170	220	112	30	260	420	320	19	16	5/8	G 1/4	51	98,5
85	585	446	80	82,5	12	50	100	180	225	112	30	290	440	350	19	16	5/8	G 1/4	62,5	120
90	603	468	85	81,5	11	50	105	190	230	112	30	290	460	350	19	16	5/8	G 1/4	72	142
95	632	496	90	87,5	13	50	110	200	253	125	36	320	480	400	24	20	3/4	G 1/4	84	164
100	671	524	95	97	11,5	46,5	120	215	264	130	40	320	500	400	24	20	3/4	G 1/4	94	187
110	684	531	95	93,5	10	54,5	130	240	296	150	40	380	520	450	28	24	1	G 1/4	117	240
120	705	546	100	95	11,5	62,5	140	260	322	160	40	410	538	500	35	30	1 1/4	G 1/4	137	289

12.4 Shafts for two-bearing housings in the PDN 2 series
d_a **30 – 120** mm

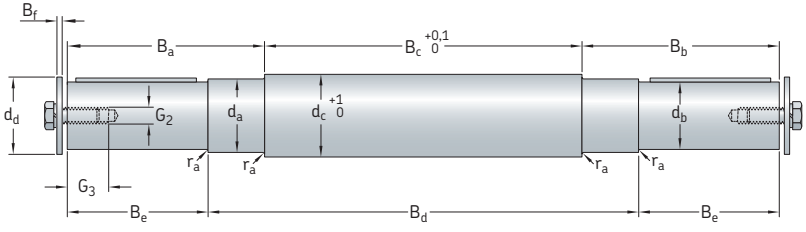

Dimensions
Shaft

d_a	d_b	d_c	d_d	B_a	B_b	B_c	B_d	B_e	B_f	r_a	G_2	G_3
mm												
30	24	39	32	97	95,5	117,5	210	50	4	0,8	10	27
35	28	44	36	109,5	108	142,5	240	60	4	1,2	10	27
40	32	49	40	135,5	134	164,5	274	80	5	1,2	12	30
50	42	59	50	166	164,5	218,5	329	110	6	1,6	16	36
55	48	64	63	175	173,5	242,5	371	110	6	1,6	16	40
60	48	69	63	169	167,5	274,5	391	110	6	1,6	16	40
70	60	79	70	206,5	205	346,5	478	140	6	1,6	16	40
75	65	84	78	207,5	206	344,5	478	140	6	1,6	20	46
80	70	89	90	216	214,5	361,5	512	140	6	1,6	20	46
90	80	104	100	251	249,5	401,5	562	170	8	1,6	20	46
100	90	114	105	256	256	435	607	170	8	2,5	24	52
110	100	124	115	296,5	296,5	483	656	210	8	2,5	24	52
120	110	134	132	300	300	514	694	210	12	2,5	30	60

Shaft diameter	Appropriate parts				Mass
	Housing	Bearings	Shaft	Shaft keys to ISO 773	Shaft only
d_a					
mm	–				kg
30	PDN 206	2 x 6206	**VJ-PDNB 206**	8x7x40	1,8
35	PDN 207	2 x 6207	**VJ-PDNB 207**	8x7x40	2,85
40	PDN 208	2 x 6208	**VJ-PDNB 208**	10x8x63	4,25
50	PDN 210	2 x 6210	**VJ-PDNB 210**	12x8x80	7,65
55	PDN 211	2 x 6211	**VJ-PDNB 211**	14x9x80	10,5
60	PDN 212	2 x 6212	**VJ-PDNB 212**	14x9x80	13
70	PDN 214	2 x 6214	**VJ-PDNB 214**	18x11x100	23
75	PDN 215	2 x 6215	**VJ-PDNB 215**	18x11x100	26,5
80	PDN 216	2 x 6216	**VJ-PDNB 216**	20x12x100	31,5
90	PDN 218	2 x 6218	**VJ-PDNB 218**	22x14x140	47,5
100	PDN 220	2 x 6220	**VJ-PDNB 220**	25x14x140	61
110	PDN 222	2 x 6222	**VJ-PDNB 222**	28x16x180	83
120	PDN 224	2 x 6224	**VJ-PDNB 224**	28x16x180	102

12.5 Shafts for two-bearing housings in the PDN 3 series
d_a 25 – 120 mm

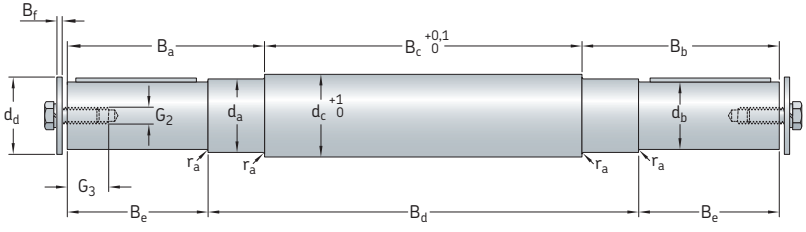

Dimensions
Shaft

d_a	d_b	d_c	d_d	B_a	B_b	B_c	B_d	B_e	B_f	r_a	G_2	G_3
mm												
25	19	34	28	91	89,5	115,5	216	40	4	0,8	8	20
30	24	39	32	101,5	100	138,5	240	50	4	0,8	10	27
35	28	44	36	118,5	117	158,5	274	60	4	1,2	10	27
40	32	49	40	140	138,5	212,5	331	80	5	1,2	12	30
45	38	54	45	151,5	150	234,5	376	80	5	1,2	12	30
50	42	59	50	175	173,5	264,5	393	110	6	1,6	16	36
55	48	64	63	186,5	185	286,5	438	110	6	1,6	16	40
60	48	69	63	182,5	181	332,5	476	110	6	1,6	16	40
65	55	74	70	191	189,5	347,5	508	110	6	1,6	16	40
70	60	79	70	225	223,5	363,5	532	140	6	1,6	16	40
75	65	84	78	230,5	229	387,5	567	140	6	1,6	20	46
80	70	89	90	227	225,5	403,5	576	140	6	1,6	20	46
85	75	99	90	234,5	234,5	421	610	140	6	1,6	20	46
90	80	104	100	260	260	445	625	170	8	1,6	20	46
95	85	109	100	269,5	269,5	469	668	170	8	2,5	20	46
100	90	114	105	266,5	266,5	500	693	170	8	2,5	24	52
110	100	124	115	309,5	309,5	510	709	210	8	2,5	24	52
120	110	134	132	314	314	522	730	210	12	2,5	30	60

Shaft diameter d_a	**Appropriate parts** Housing	Bearings	Shaft	Shaft keys to ISO 773	**Mass** Shaft only
mm	–				kg
25	PDN 305	2 x 6305	**VJ-PDNB 305**	6x6x32	1,4
30	PDN 306	2 x 6306	**VJ-PDNB 306**	8x7x40	2,2
35	PDN 307	2 x 6307	**VJ-PDNB 307**	8x7x40	3,35
40	PDN 308	2 x 6308	**VJ-PDNB 308**	10x8x63	5,25
45	PDN 309	2 x 6309	**VJ-PDNB 309**	10x8x63	7,3
50	PDN 310	2 x 6310	**VJ-PDNB 310**	12x8x80	9,85
55	PDN 311	2 x 6311	**VJ-PDNB 311**	14x9x80	13
60	PDN 312	2 x 6312	**VJ-PDNB 312**	14x9x80	15,5
65	PDN 313	2 x 6313	**VJ-PDNB 313**	16x10x80	19,5
70	PDN 314	2 x 6314	**VJ-PDNB 314**	18x11x100	25
75	PDN 315	2 x 6315	**VJ-PDNB 315**	18x11x100	30
80	PDN 316	2 x 6316	**VJ-PDNB 316**	20x12x100	34,5
85	PDN 317	2 x 6317	**VJ-PDNB 317**	20x12x100	43
90	PDN 318	2 x 6318	**VJ-PDNB 318**	22x14x140	51
95	PDN 319	2 x 6319	**VJ-PDNB 319**	22x14x140	59,5
100	PDN 320	2 x 6320	**VJ-PDNB 320**	25x14x140	67,5
110	PDN 322	2 x 6322	**VJ-PDNB 322**	28x16x180	87,5
120	PDN 324	2 x 6324	**VJ-PDNB 324**	28x16x180	106

12.6 Shafts for two-bearing housings in the PDP series
d_a 70 – 120 mm

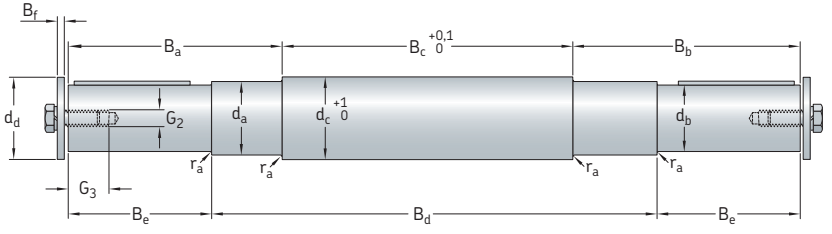

Dimensions
Shaft

d_a	d_b	d_c	d_d	B_a	B_b	B_c	B_d	B_e	B_f	r_a	G_2	G_3
mm												
70	60	79	70	212	229	317	474	142	6	1,6	16	40
80	70	89	90	221,5	240,5	330	508	142	6	1,6	20	46
90	80	104	100	259,5	279,5	363	558	172	8	1,6	20	46
100	90	114	105	268	290	389	603	172	8	2,5	24	52
110	100	124	115	311,5	334,5	430	652	212	8	2,5	24	52
120	110	134	132	318	340	456	690	212	12	2,5	30	60

Shaft diameter d_a	**Appropriate parts** Housing	Bearings in the locating position	Bearing in the non-locating position	Shaft	Shaft keys to ISO 773	**Mass** Shaft only
mm	–					kg
70	PDP 214	2 x 7214 BECBP	NU 2214 ECP	**VJ-PDPF 2214**	18x11x100	23
80	PDP 216	2 x 7216 BECBP	NU 2216 ECP	**VJ-PDPF 2216**	20x12x100	32,5
90	PDP 218	2 x 7218 BECBP	NU 2218 ECP	**VJ-PDPF 2218**	22x14x140	46,5
100	PDP 220	2 x 7220 BECBP	NU 2220 ECP	**VJ-PDPF 2220**	25x14x140	60,5
110	PDP 222	2 x 7222 BECBP	NU 2222 ECP	**VJ-PDPF 2222**	28x16x180	82
120	PDP 224	2 x 7224 BCBM	NU 2224 ECP	**VJ-PDPF 2224**	28x16x180	101

12.7 Shafts for two-bearing housings in the PDR series
d_a **75 – 120** mm

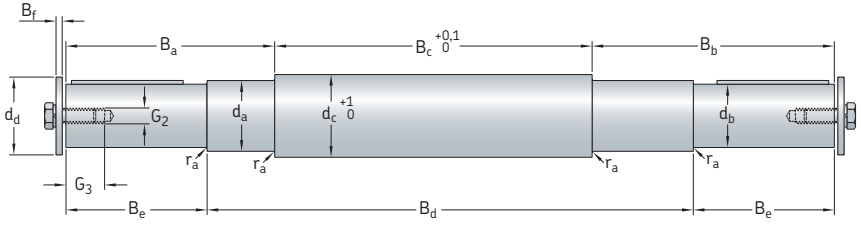

Dimensions
Shaft

d_a	d_b	d_c	d_d	B_a	B_b	B_c	B_d	B_e	B_f	r_a	G_2	G_3
mm												
75	65	84	78	220,5	257,5	353	547	142	6	1,6	20	46
80	70	89	90	223	262	367	568	142	6	1,6	20	46
85	75	99	90	231,5	272,5	381	601	142	6	1,6	20	46
90	80	104	100	258,5	301,5	403	619	172	8	1,6	20	46
95	85	109	100	262,5	307,5	425	651	172	8	2,5	20	46
100	90	114	105	266,5	313,5	454	690	172	8	2,5	24	52
110	100	124	115	308	358	461	703	212	8	2,5	24	52
120	110	134	132	312,5	367,5	468	724	212	12	2,5	30	60

Shaft diameter d_a	**Appropriate parts** Housing	Bearings in the locating position	Bearing in the non-locating position	Shaft	Shaft keys to ISO 773	**Mass** Shaft only
mm	–					kg
75	PDR 315	NU 315 ECP + 6315/C3	NU 315 ECP	**VJ-PDRJ 315**	18x11x100	29
80	PDR 316	NU 316 ECP + 6316/C3	NU 316 ECP	**VJ-PDRJ 316**	20x12x100	34
85	PDR 317	NU 317 ECP + 6317/C3	NU 317 ECP	**VJ-PDRJ 317**	20x12x100	42
90	PDR 318	NU 318 ECP + 6318/C3	NU 318 ECP	**VJ-PDRJ 318**	22x14x140	50,5
95	PDR 319	NU 319 ECP + 6319/C3	NU 319 ECP	**VJ-PDRJ 319**	22x14x140	58
100	PDR 320	NU 320 ECP + 6320/C3	NU 320 ECP	**VJ-PDRJ 320**	25x14x140	67
110	PDR 322	NU 322 ECP + 6322/C3	NU 322 ECP	**VJ-PDRJ 322**	28x16x180	86,5
120	PDR 324	NU 324 ECP + 6324/C3	NU 324 ECP	**VJ-PDRJ 324**	28x16x180	104


SKF

Housings for paper machines SBFN, SBPN and SDM series

Bearing types
- Spherical roller bearings
- CARB toroidal roller bearings

Bearing dimension series
- 22, 23, 31 (SBFN series)
- 31 (SBPN series)
- 30, 31 (SDM series)

Shaft diameter range
- 60 to 180 mm (SBFN series)
- 180 to 320 mm (SBPN series)
- 340 to 670 mm (SDM series)

Typical shaft-bearing combinations
- Stepped shaft with a bearing on a tapered seat

Seals
- Labyrinth (SBFN and SBPN series)
- Gap-type seal with oil flinger (SDM series)

Lubrication
- Circulating oil lubrication systems

Materials
- Grey cast iron

Mounting
- Two-bolt mounting (SBFN series)
- Four-bolt mounting (SBPN and SDM series)

Compliance to standards
- Not standardized

Supersedes
- SBF, SBP series

With increasing demands placed on the output of paper machines, the operating conditions for housings, bearings and seals in this application are quite severe. Very high temperatures are typical and the risk of water contamination is always high. SKF provides housings for felt rolls, drying cylinders, and Yankee cylinders (used for producing tissue and board).

Housings for paper machines SBFN, SBPN and SDM series

Designations 591

Standard housing design 592
Features and benefits 593
Housing material 593
Paint, corrosion protection 593
Dimension standards 593

Housing variants 594
Housings for connections with inch threads 594
Housings with special paint 594
Housings for steam joint connections . . 594
Housings for the wet section 594
Housings for rope sheaves 595
Housings for four-bolt mounting 595

Sealing solutions 596

Design consideration 598
Typical shaft-bearing combinations . . . 598
Locating and non-locating bearing positions 598
Load carrying capacity 598
Operating temperature 600
Operating speed 600
Shaft specifications 600
Attachment bolt recommendations 601

Lubrication 602

Mounting 603
Eye bolts and lifting holes 603
Cap bolt torque specifications 603

Condition monitoring 604

Accessories 605

Ordering information 605

Product tables
13.1 SBPN drying cylinder housings . . 606
13.2 SBPN drying cylinder housings – short, wide base 608
13.3 SBPN drying cylinder housings, with inch connection threads 610
13.4 SBPN drying cylinder housings, with inch connection threads – short, wide base 612
13.5 SDM Yankee cylinder housings . . . 614
13.6 SDM Yankee cylinder housings, with inch connection threads 618

Designations

Designation system for SKF housings for paper machines[1)]

A SBPN 3136 RA/P45

Prefix

A	Short, wide base (SBPN series only)

Series

SBFN	Non-split felt roll housing
SBPN	Non-split drying cylinder housing
SDM	Yankee cylinder housing (split)

Size identification

22(00)	Housing for bearings in the 22 dimension series
23(00)	Housing for bearings in the 23 dimension series
30(00)	Housing for bearings in the 30 dimension series
31(00)	Housing for bearings in the 31 dimension series
..(00)	Size code of the bearing, x 5 = bearing bore diameter [mm]
../..	Bearing bore diameter [mm] e.g. .../530

Suffixes[2)]

–	Housing for metric thread connection arrangements (shaft, oil inlet and sensor attachment threads) (SBFN and SBPN series only)
–	Housing for metric thread connection arrangements (shaft, oil inlet and sensor attachment threads) and through shaft (SDM series only)
A	Housing for a shaft end, with end cover (SBFN and SBPN series only)
B	Housing for a through shaft (SBFN and SBPN series only)
B..	Housing for a through shaft with a modified outer cover for a steam box connection (B1 to B99) (SBPN and SDM series only)
F	Housing for the locating bearing position (drive side)
RA	Housing for a CARB toroidal roller bearing (front side)
N9	Housing for inch thread connection arrangements (shaft, oil inlet and sensor attachment threads)
/P..	Paint variant according to customer specification (P01 to P999)

1) SNL ... TURP housings are included in the Designation system on **page 191**.
2) When multiple suffixes are used, they are listed in the same order as shown here.

Standard housing design

SKF provides an assortment of housings for paper machines. The four standard housing series that are covered in this publication include:

- SBFN series, for felt rolls
- SBPN series, for drying cylinders
- SDM series, for Yankee cylinders
- SNL ... TURP series, for drying cylinders and felt rolls

SBFN felt roll housings (→ **fig. 1**) are non-split housings. They consist of a housing body and two covers with integrated seals. The base has two oblong cast holes for attachment bolts. Oblong attachment bolt holes enable exact positioning of the housing during mounting to fully exploit the potential of CARB toroidal roller bearings to accommodate thermal elongation of the shaft. For dimensions and detailed specifications of SBFN housings, contact SKF.

SBPN drying cylinder housings (→ **fig. 2**) are non-split housings. They consist of a housing body and two covers with integrated seals. The base has four cast holes for attachment bolts. Housings for spherical roller bearings have open-ended attachment bolt holes. Housings for CARB toroidal roller bearings have oblong attachment bolt holes. They enable exact positioning of the housing during mounting to fully exploit the potential of CARB toroidal roller bearings to accommodate thermal elongation of the shaft.

SDM Yankee cylinder housings (→ **fig. 3**) are split housings consisting of a cap, base and two covers with integrated seals. The inboard cover is split to enable removal of the cover without removing the cap. To facilitate handling, the cap has two integral flanges, with a hole cast into each one. The base has four holes for attachment bolts. Housings for spherical roller bearings have drilled attachment bolt holes. Housings for CARB toroidal roller bearings have oblong attachment bolt holes. They enable exact positioning of the housing during mounting to fully exploit the potential of CARB toroidal roller bearings to accommodate thermal elongation of the shaft.

For information about SNL ... TURP housings, refer to the chapter *Split plummer block housings SNL 30, 31 and 32 series*, starting on

Fig. 1

SBFN felt roll housings

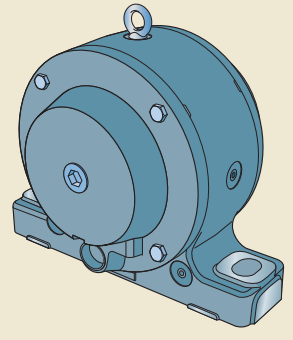

Fig. 2

SBPN drying cylinder housings

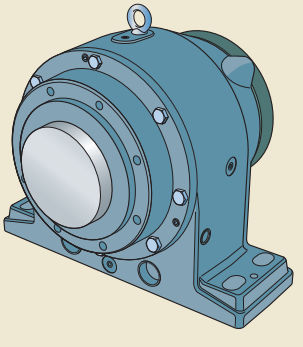

Fig. 3

SDM yankee cylinder housings

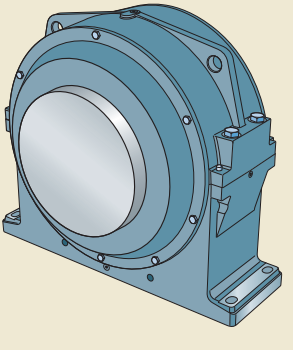

Fig. 4

SDM Yankee cylinder rocker housings

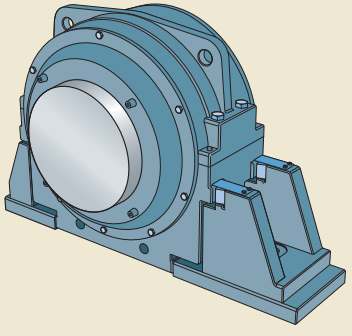

page 189. For information about other housings for felt rolls and drying cylinders such as SBF and SBP housings (predecessors to SBFN and SBPN housings respectively) as well as SDM Yankee cylinder housings on rockers (→ **fig. 4**), all of which can still be supplied by SKF, contact the SKF application engineering service.

Features and benefits

SKF housings for paper machines have the following features and benefits:

Optimized designs

The housing designs are developed together with leading OEMs and are optimized to accommodate the arduous operating conditions present in paper machines.

Effective and maintenance-free seals

SBFN and SBPN housings have upgraded labyrinth seals compared to their predecessors, providing extra protection against liquid contaminants during operation and high pressure wash-downs. The seals also virtually eliminate oil leaks, even for high oil flow rates.

SDM housings have a maintenance-free, non-contact gap-type seal incorporated into each cover.

Prepared for condition monitoring

The housings have tapped holes to attach condition monitoring sensors.

Mounting in different positions

It is possible to mount SBFN housings at angles of 0°, 90°, 180° and 270°.

Housing material

SKF housings for paper machines are made of grey cast iron.

Paint, corrosion protection

SBFN, SBPN and SDM housings are painted blue (RAL 5007) using a water based alkyd/acryl paint. The paint protects the housings in accordance with ISO 12944-2, corrosivity category C2 (→ **page 36**). Housings can be repainted with most water or solvent based one- or two-component paints. The housings can also be supplied painted according to customer specification (→ *Housing variants*, **page 594**).

Unpainted surfaces are protected with a solventless rust inhibitor.

Dimension standards

SBFN, SBPN and SDM housings are not standardized either nationally or internationally.

Housing variants

In addition to standard design housings for paper machines, a number of variants are also available. For additional information, contact the SKF application engineering service.

Housings for connections with inch threads

SBFN, SBPN and SDM housings can be supplied with inch threads for connectors. Threads are in accordance with modified American National Form NS threads and all screws and bolts have UNC threads. Oil inlets and outlets are tapped with NPTF threads and holes for condition monitoring sensors have 5/16-18 UNC threads.

This housing variant is identified by the designation suffix N9, e.g. SBPN 3140 RAN9.

Housings with special paint

SBFN, SBPN and SDM housings can be supplied painted according to customer specification. The housings are identified by the designation suffix P, followed by a number, e.g. SBFN 3136 RA/P45.

Housings for steam joint connections

SBPN and SDM housings can be supplied with a modified cover to accommodate steam joint connections on through shafts (→ **fig. 5**). Various cover designs are available to suit the type of steam joint.

This housing variant is identified by the designation suffix B, followed by a number (from 1 to 99) indicating the cover design, e.g. SDM 30/670 B2RA.

Housings for the wet section

SBFN housings for the wet section are available on request. For additional information,

Fig. 5

Housing for steam joint connection, SBPN series

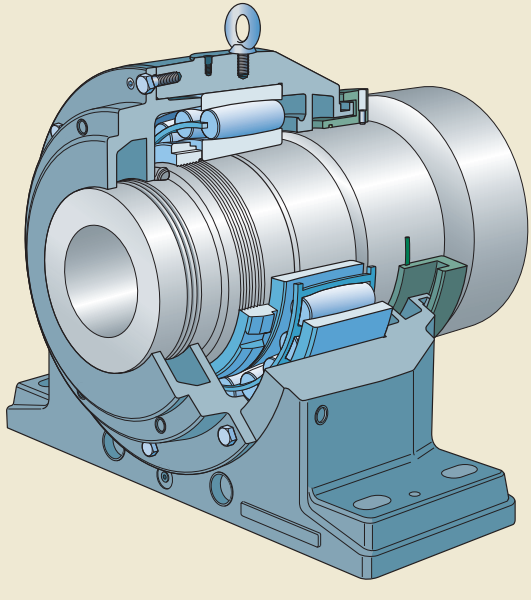

contact the SKF application engineering service.

Housings for rope sheaves

For rope sheave applications, SBPN drying cylinder housings can be supplied with one side machined to fit the rope sheave. For additional information, contact the SKF application engineering service.

Housings for four-bolt mounting

SBFN housings can be supplied with four holes cast into the base for attachment bolts. For additional information, contact the SKF application engineering service.

Sealing solutions

Table 1 provides an overview of the characteristics and suitability of the sealing solutions for SKF housings for paper machines. This information should be used as a guideline, which cannot substitute for testing a seal in its application.

SBFN (→ **fig. 6**) and SBPN (→ **fig. 7**) housings are equipped with labyrinth seals integrated in each cover. A labyrinth ring, bolted to the shaft, forms an axial labyrinth with the housing cover. Shafts used with SBFN housings require machined grooves that act as oil flingers. End covers are available for housings mounted at the end of a shaft.

SDM housings are equipped with gap-type seals and split oil flinger rings (→ **fig. 8**). The seals are integrated in the covers. The flinger ring is split and mounted directly onto the shaft. The ring is positioned axially by tightening the ring screw into a tapped hole on the shaft.

Fig. 6

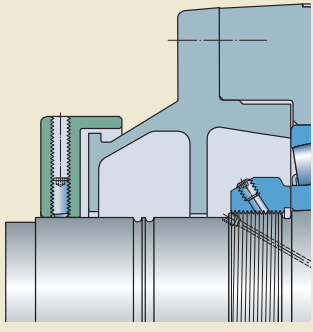

Fig. 7

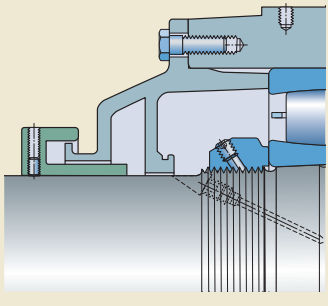

Fig. 8

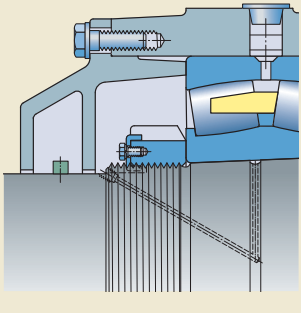

Table 1

Seals for SKF housings for paper machines

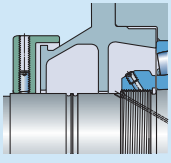

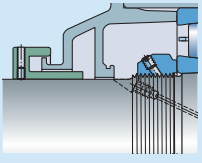

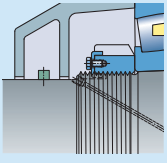

	SBFN	SBPN	SDM
Seal			
Type	Labyrinth	Labyrinth	Gap seal with oil flinger
Material	grey cast iron	grey cast iron	grey cast iron, steel
Application conditions and requirements			
Temperature [°C]	–40 to +200	–40 to +200	–40 to +200
Temperature [°F]	–40 to +390	–40 to +390	–40 to +390
Max. circumferential speed [m/s]	bearing dependent	bearing dependent	bearing dependent
Max. misalignment [°]	0,5	0,5	0,3
Low friction	++	++	++
Shaft tolerance class	h9Ⓔ	h9Ⓔ	h9Ⓔ
Shaft roughness R_a [µm]	≤ 3,2	≤ 3,2	≤ 3,2
Sealing suitability			
Dust	–	–	–
Fine particles	+	+	+
Coarse particles	+	+	+
Pressure-wash	+	+	–
Running water	++	++	–

Symbols: ++ very suitable + suitable – limited suitability –– unsuitable

13

Design considerations

For general information about design considerations, refer to the following sections:

- *Typical shaft-bearing combinations* (→ **page 41**)
- *Locating/non-locating bearing arrangements* (→ **page 40**)
- *Housing support surface* (→ **page 45**)

For additional information about rolling bearings, refer to the product information available online at skf.com/bearings. For information about paper machine applications, refer to the SKF handbook *Rolling bearings in paper machines*.

Typical shaft-bearing combinations

Housings for paper machines can accommodate stepped shafts with a bearing on a tapered seat (→ **fig. 9**):

Fig. 9

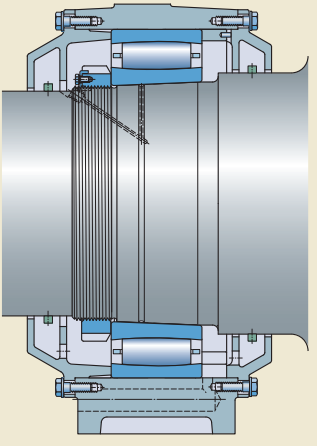

Locating and non-locating bearing positions

Housings for paper machines are available for both the locating and non-locating bearing positions:

- Housings with the designation suffix F are designed to accommodate spherical roller bearings in the locating bearing position on the drive side.
- Housings with the designation suffix RA are designed for CARB toroidal roller bearings in the non-locating bearing position on the front side.

SKF recommends using a spherical roller bearing on the drive side and a CARB toroidal roller bearing on the front side (→ *The SKF self-aligning bearing system*, **page 41**). However, other housing/bearing combinations are also available (→ **table 2**).

The extent to which a CARB toroidal roller bearing can accommodate axial displacement due to interference with the seal can be calculated. For assistance, contact the SKF application engineering service

Load carrying capacity

For information about breaking loads for SBFN housings, contact SKF for more information. SBPN and SDM housings are intended for loads acting perpendicular toward the support surface.

Guideline values for the permissible loads for SDM housings, based on cap bolt strength, are provided in **table 3**. Housings for paper machines should always be supported over the entire base. Perpendicular loads toward the support surface are limited only by the bearing.

Table 2

Housing/bearing combinations

Housing series	Locating bearing position (Drive side)	Non-locating bearing position (Front side)		
	spherical roller bearing with located outer ring	CARB bearing with located outer ring	spherical roller bearing with non-located outer ring	spherical roller bearing with located outer ring in housing on rockers
Felt roll housings				
– SBFN	✓	✓	–	–
– SBF	✓	–	✓[1]	–
Drying cylinder housings				
– SBPN	✓	✓	–	–
– SBP	✓	✓	✓[1]	✓[1]
Yankee cylinder housings				
– SDM	✓	✓	✓[1]	✓[1] [2]

[1] This housing/bearing combination is still available on request. However, SKF strongly recommends using a CARB toroidal roller bearing at the front side (→ *The SKF self-aligning bearing system*, **page 41**).
[2] Also available additionally with two support rockers.

Table 3

Permissible loads for SDM housings

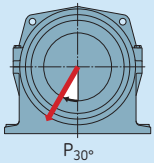

$P_{30°}$

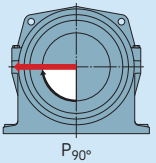

$P_{90°}$

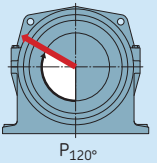

$P_{120°}$

Housing	Permissible loads		
Size	$P_{30°}$	$P_{90°}$	$P_{120°}$
–	kN		
3068	490	325	275
3168	590	295	245
3076	560	310	260
3084	650	305	255
3184	–[1]	–[1]	–[1]
3092	770	320	270
30/530	900	500	425
31/530	1 000	525	450
30/600	1 000	525	450
31/600	–[1]	–[1]	–[1]
30/670	1 090	475	400

[1] Contact SKF.

Additional housing support

When radial loads act at angles between 30° and 120° on SDM and SBPN housings or between 90° and 270° on SBFN housings, a stop should be provided to counter the load. The stop should be sufficiently strong to accommodate the loads acting parallel to the support surface (→ **fig. 10**).

Fig. 10

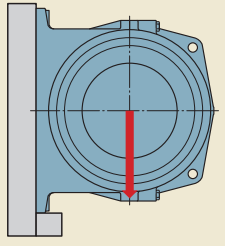

Operating temperature

The housing material does not set any temperature limits, except for very low temperature applications where impact strength could be a factor. For additional information, contact the application engineering service.

The housing paint is heat resistant up to 80 °C *(175 °F)* material temperature or 100 °C *(210 °F)* ambient temperature. Alternative paints that can accommodate higher temperatures are available on request (→ *Housing variants*, **page 594**).

Operating speed

The permissible operating speed of the incorporated bearing is not limited by the housing or the seal.

Shaft specifications

The bearing seat on the shaft should comply with the tolerances required by the bearing (→ SKF handbook *Rolling bearings in paper machines*), which is typically to IT9 tolerance grade. A cylindricity tolerance of IT5/2 and a conicity tolerance of IT7/2 are recommended.

Attachment bolt recommendations

In typical applications, 8.8 class hexagon head bolts, in accordance with ISO 4014, can be used together with washers.

For SBPN housings, M 24 or 1 UNC attachment bolts with a recommended tightening torque of 665 Nm are suitable. For SDM housings, refer to **table 4**.

Table 4

Torque values for cap bolts and attachment bolts for SDM housings

Housing Size	**Cap bolts** Designation to ISO 262 grade 8.8	Tightening torque	**Attachment bolts** Size	Tightening torque
–	–	Nm	–	Nm
3068	M 24 or 1 UNC	350	M 24 or 1 UNC	665
3168	M 24 or 1 UNC	350	M 24 or 1 UNC	665
3076	M 24 or 1 UNC	350	M 24 or 1 UNC	665
3084	M 30 or 1.1/4 UNC	400	M 24 or 1 UNC	665
3184	M 30 or 1.1/4 UNC	400	M 24 or 1 UNC	665
3092	M 30 or 1.1/4 UNC	400	M 24 or 1 UNC	665
30/530	M 30 or 1.1/4 UNC	400	M 30 or 1.1/4 UNC	1 310
31/530	M 30 or 1.1/4 UNC	400	M 30 or 1.1/4 UNC	1 310
30/600	M 30 or 1.1/4 UNC	400	M 30 or 1.1/4 UNC	1 310
31/630	M 36 or 1.1/2 UNC	600	M 30 or 1.1/4 UNC	1 310
30/670	M 36 or 1.1/2 UNC	600	M 30 or 1.1/4 UNC	1 310

Lubrication

SBFN, SBPN and SDM housings are designed for high-flow circulating oil systems. The oil should be selected based on the operating conditions of the bearing. For additional information about lubricant selection, refer to the product information available online at skf.com/bearings.

A circulating oil lubrication system typically has supply lines and drain lines. Circulation is normally produced with the aid of a pump. After the oil has passed through the bearing, it drains from the housing and flows into a tank where it is filtered and allowed to cool before being returned to the housing. Proper filtering and cooling of the oil are important factors for bearing and oil service life, and can improve machine performance as well as cost savings.

SBFN housings have two oil inlets and one oil outlet (→ **fig. 11**). One of the inlets as well as the outlet are plugged with plastic plugs. The other inlet, not in use, is plugged with a steel plug.

SBPN and SDM housings have two oil inlets, and two oil outlets on each side (→ **figs. 12** and **13**). SKF recommends using both outlets on the relevant side to sufficiently drain the large quantity of circulating oil. The tapped outlets have two plastic and two steel plugs. The steel plugs should remain on the side opposite the return pipes.

Fig. 11

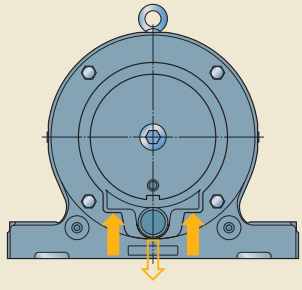

Fig. 12

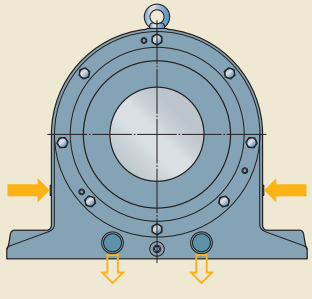

Fig. 13

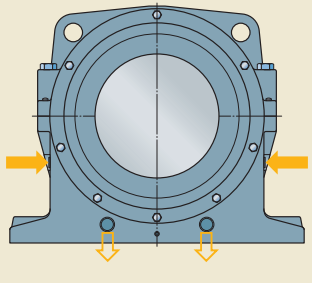

Mounting

SKF housings for paper machines must be mounted properly by experienced, knowledgeable people using the correct tools.

SBFN housings can be mounted at angles of 0°, 90°, 180° and 270°. To prevent oil leakage, the arrow on the cover should always point upward.

For SBFN and SBPN housings, the interface between the housing and covers should be coated with an oil-resistant sealant.

SBPN and SDM housings should be mounted so that the oil outlets with the plastic plugs are facing outward.

For additional information, contact the SKF application engineering service. SKF can also assist during mounting or provide a complete installation service

Eye bolts and lifting holes

SBFN and SBPN housings are supplied with an eye bolt on top. SDM housings have two flanges on the cap with a cast hole in each (→ **fig. 14**).

Cap bolt torque specifications

Cap bolts should be tightened to the recommended torque values listed in **table 4** on **page 601**).

Fig. 14

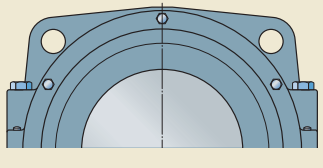

Condition monitoring

SBFN (→ **fig. 15**), SBPN (→ **fig. 16**) and SDM housings (→ **fig. 17**) have tapped holes (M8) for attaching condition monitoring sensors.

Housings with inch thread connections, designation suffix N9, have holes for attaching condition monitoring sensors with 5/16-18 UNC threads.

Fig. 15

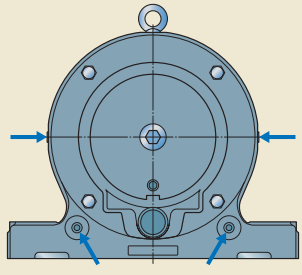

Fig. 16

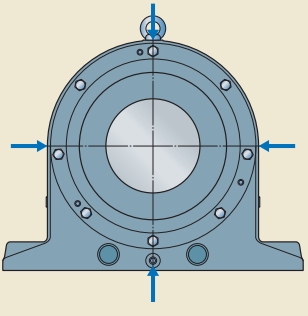

Fig. 17

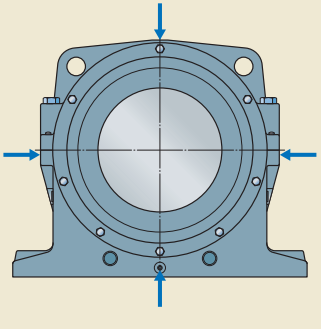

Accessories

The following accessories are available for housings for paper machines:

- central lubrication systems, e.g. SKF Flowline
- condition monitoring sensors

For additional information, contact SKF.

Ordering information

SKF housings for paper machines are supplied complete with covers, seals and plugs. The bearings must be ordered separately.

Order example

Two housings with inch thread dimensions are required for a felt roll assembly – one for a 22218 EK/C3 spherical roller bearing in the locating bearing position, and one for a C 22218 K/C3 CARB toroidal roller bearing in the non-locating bearing position at the end of a shaft. The following items should be ordered (in addition to the bearings):

- 1 SBFN 2218 BFN9
- 1 SBFN 2218 ARAN9

Two housings are required for a drying cylinder assembly – one for a 23144 CCK/C4W33 spherical roller bearing in the locating bearing position, and one for a C 3144 K/C4 CARB toroidal roller bearing in the non-locating bearing position at the end of a shaft. The housings require a special paint that can accommodate special customer requirements. The following items should be ordered (in addition to the bearings):

- 1 SBPN 3144 BF/P..
- 1 SBPN 3144 ARA/P..

Two housings are required for a Yankee cylinder – one for a 230/670 CAK/C084W33 spherical roller bearing in the locating bearing position, and one for a C 30/670 KM/C084 CARB toroidal roller bearing in the non-locating bearing position. The following items should be ordered (in addition to the bearings):

- 1 SDM 30/670 F
- 1 SDM 30/670 RA

13.1 SBPN drying cylinder housings
d_a 180 – 320 mm

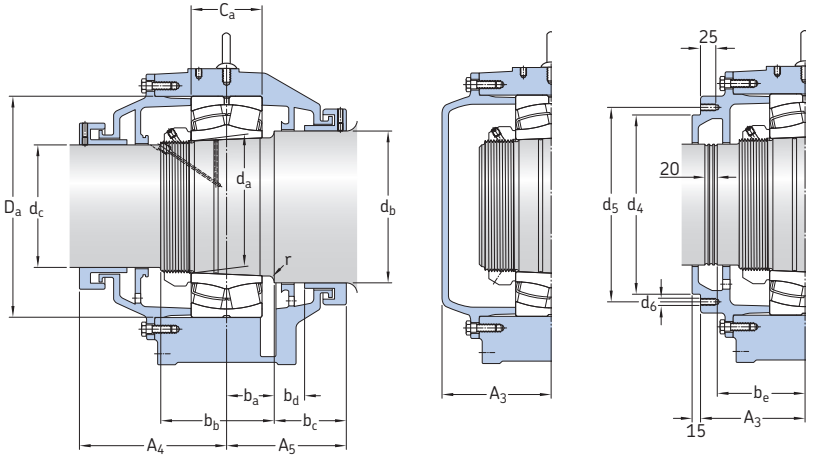

Housing for through shaft (designation suffix B)

Housing for shaft end (designation suffix A)

Housing for steam joint connection (designation suffix B42)

Shaft diameter d_a	Housing Designation	Appropriate parts Bearing[1]	Lock nut[2]	Dimensions Housing A_1	A_3	A_4	A_5	C_a	D_a	H	H_1	H_2	J	J_1	J_2	L
mm	–	–		mm												
180	**SBPN 3136 F** **SBPN 3136 RA**	23136 CCK/W33 C 3136 K	KMT 36	170	155	230	195	96	300	400	220	50	440	90	424	520
200	**SBPN 3140 F** **SBPN 3140 RA**	23140 CCK/W33 C 3140 K	KMT 40	200	165	240	200	112	340	440	240	55	485	115	469	570
220	**SBPN 3144 F** **SBPN 3144 RA**	23144 CCK/W33 C 3144 K	KMT 44	235	175	255	200	120	370	490	265	60	550	135	534	640
240	**SBPN 3148 F** **SBPN 3148 RA**	23148 CCK/W33 C 3148 K	KMT 48	250	190	265	215	128	400	535	285	65	580	150	564	680
260	**SBPN 3152 F** **SBPN 3152 RA**	23152 CCK/W33 C 3152 K	KMT 52	265	200	280	225	144	440	570	310	75	620	160	604	720
300	**SBPN 3160 F** **SBPN 3160 RA**	23160 CCK/W33 C 3160 K	KMT 60	300	215	290	235	160	500	630	335	85	720	180	704	820
320	**SBPN 3164 F** **SBPN 3164 RA**	23164 CCK/W33 C 3164 KM	KMT 64	320	225	300	255	176	540	680	360	85	760	200	744	880

[1] 231(00) – spherical roller bearing, C... – CARB toroidal roller bearing. Only typical bearings are listed. Other bearing variants can also fit the housing.
[2] As an alternative to KMT lock nuts, it is also possible to use KML or HM lock nuts with a locking device.

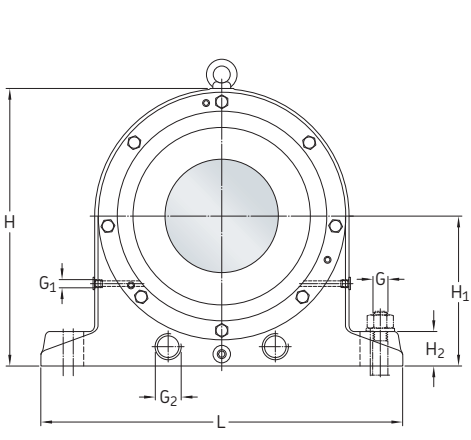

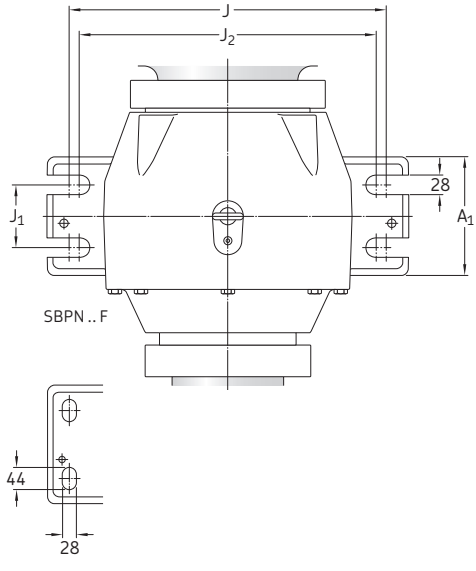

Shaft diameter	Dimensions Housing			Shaft												Mass Housing	
d_a	G	G_1	G_2	b_a	b_b	b_c min.	b_d	b_e	d_b	d_c	d_d	d_4	d_5	d_6	r	A	B
mm	–			mm							–	mm		–		kg	
180	M 24	G 1/2	G 1.1/4	65	150	130	55	128	200	160	M 180x3	225	250	M 12	5	118	115
200	M 24	G 1/2	G 1.1/4	75	170	125	50	138	230	180	M 200x3	265	290	M 12	8	133	147
220	M 24	G 1/2	G 1.1/4	75	190	125	50	148	250	200	Tr 220x4	305	330	M 12	8	189	205
240	M 24	G 1/2	G 1.1/4	85	205	130	55	163	275	220	Tr 240x4	335	360	M 12	8	244	256
260	M 24	G 1/2	G 1.1/2	95	225	130	55	173	300	240	Tr 260x4	355	380	M 12	8	259	273
300	M 24	G 1/2	G 1.1/2	105	250	130	55	188	340	280	Tr 300x4	435	460	M 12	8	342	358
320	M 24	G 1/2	G 1.1/2	115	270	140	65	198	360	300	Tr 320x5	455	480	M 12	8	445	465

13.2 SBPN drying cylinder housings – short, wide base
d_a 180 – 320 mm

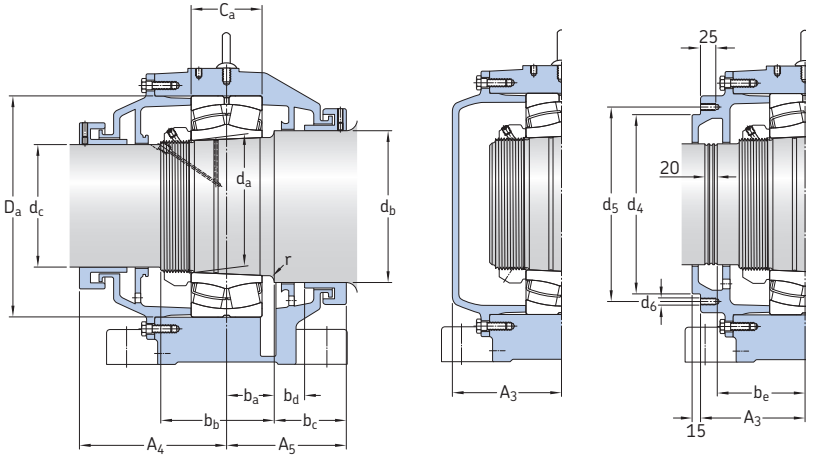

Housing for through shaft (designation suffix B)

Housing for shaft end (designation suffix A)

Housing for steam joint connection (designation suffix B42)

Shaft diameter	Housing Designation	Appropriate parts Bearing[1]	Lock nut[2]	Dimensions Housing										
d_a				A_1	A_3	A_4	A_5	C_a	D_a	H	H_1	H_2	J	L
mm	–	–		mm										
180	**ASBPN 3136 F** **ASBPN 3136 RA**	23136 CCK/W33 C 3136 K	KMT 36	350	155	230	195	96	300	400	220	50	320	400
220	**ASBPN 3144 F** **ASBPN 3144 RA**	23144 CCK/W33 C 3144 K	KMT 44	410	175	255	200	120	370	490	265	60	380	490
260	**ASBPN 3152 F** **ASBPN 3152 RA**	23152 CCK/W33 C 3152 K	KMT 52	445	200	280	225	144	440	570	310	75	470	580
300	**ASBPN 3160 F** **ASBPN 3160 RA**	23160 CCK/W33 C 3160 K	KMT 60	480	215	290	235	160	500	630	335	85	560	670
320	**ASBPN 3164 F** **ASBPN 3164 RA**	23164 CCK/W33 C 3164 KM	KMT 64	500	225	300	255	176	540	680	360	85	580	710

[1] 231(00) – spherical roller bearing, C... – CARB toroidal roller bearing. Only typical bearings are listed. Other bearing variants can also fit the housing.
[2] As an alternative to KMT lock nuts, it is also possible to use KML or HM lock nuts with a locking device.

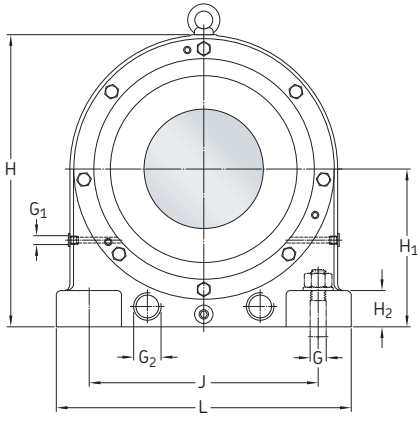

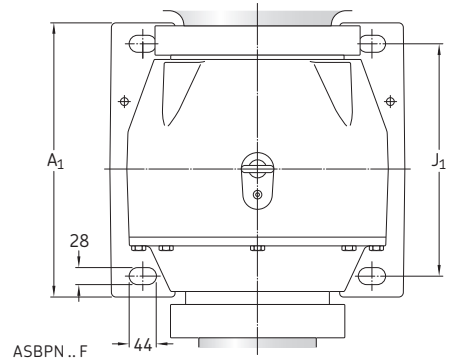

ASBPN .. F

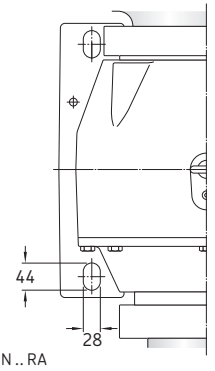

ASBPN .. RA

Shaft diameter	**Dimensions** Housing			Shaft												**Mass** Housing
d_a	G	G_1	G_2	b_a	b_b	b_c min.	b_d	b_e	d_b	d_c	d_d	d_4	d_5	d_6	r	
mm	–			mm							–	mm		–	mm	kg
180	M 24	G 1/2	G 1.1/4	65	150	130	55	128	200	160	M 180x3	225	250	M 12	5	1)
220	M 24	G 1/2	G 1.1/4	75	190	125	50	148	250	200	Tr 220x4	305	330	M 12	8	203
260	M 24	G 1/2	G 1.1/2	95	225	130	55	173	300	240	Tr 260x4	355	380	M 12	8	1)
300	M 24	G 1/2	G 1.1/2	105	250	130	55	188	340	280	Tr 300x4	435	460	M 12	8	1)
320	M 24	G 1/2	G 1.1/2	115	270	140	65	198	360	300	Tr 320x5	455	480	M 12	8	1)

1) Contact SKF for missing values.

13.3 SBPN drying cylinder housings, with inch connection threads

d_2 **180 – 320** mm

7.087 – 12.598 in.

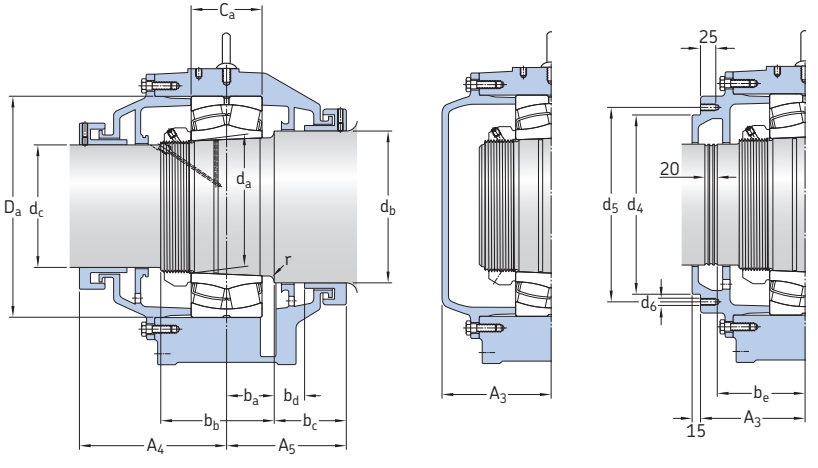

Housing for through shaft (designation suffix B)

Housing for shaft end (designation suffix A)

Housing for steam joint connection (designation suffix B42)

Shaft diameter d_a	Housing Designation	Appropriate parts Bearing[1]	Lock nut	Locking clip	Dimensions Housing A_1	A_3	A_4	A_5	C_a	D_a	H	H_1	H_2	J	J_1	J_2	L
mm/*in.*	–	–			mm												
180 *7.087*	**SBPN 3136 FN9** **SBPN 3136 RAN9**	23136 CCK/W33 C 3136 K	N 036	W 036	170	155	230	195	96	300	400	220	50	440	90	424	520
200 *7.874*	**SBPN 3140 FN9** **SBPN 3140 RAN9**	23140 CCK/W33 C 3140 K	N 040	W 040	200	165	240	200	112	340	440	240	55	485	115	469	570
220 *8.661*	**SBPN 3144 FN9** **SBPN 3144 RAN9**	23144 CCK/W33 C 3144 K	N 044	W 044	235	175	255	200	120	370	490	265	60	550	135	534	640
240 *9.449*	**SBPN 3148 FN9** **SBPN 3148 RAN9**	23148 CCK/W33 C 3148 K	N 048	PL 48	250	190	265	215	128	400	535	285	65	580	150	564	680
260 *10.236*	**SBPN 3152 FN9** **SBPN 3152 RAN9**	23152 CCK/W33 C 3152 K	N 052	PL 52	265	200	280	225	144	440	570	310	75	620	160	604	720
300 *11.811*	**SBPN 3160 FN9** **SBPN 3160 RAN9**	23160 CCK/W33 C 3160 K	N 060	PL 60	300	215	290	235	160	500	630	335	85	720	180	704	820
320 *12.598*	**SBPN 3164 FN9** **SBPN 3164 RAN9**	23164 CCK/W33 C 3164 KM	N 064	PL 64	320	225	300	255	176	540	680	360	85	760	200	744	880

[1] 231(00) – spherical roller bearing, C... – CARB toroidal roller bearing. Only typical bearings are listed. Other bearing variants can also fit the housing.

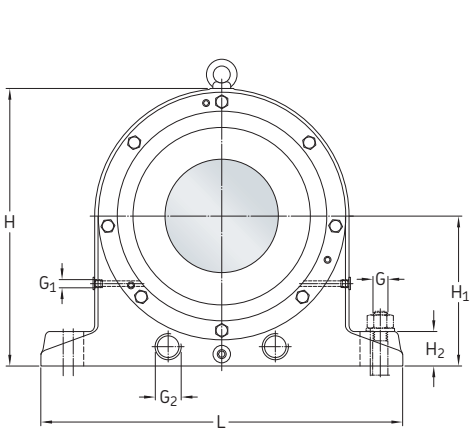

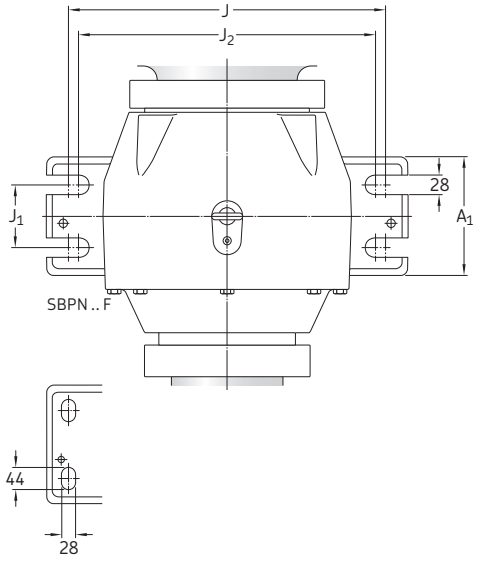

Shaft diameter	**Dimensions** Housing			Shaft													**Mass** Housing	
d_a	G	G_1	G_2	b_a	b_b	b_c min.	b_d	b_e	d_b	d_c	d_d	Threads/ inch	d_4	d_5	d_6	r	A	B
mm/*in.*	–			mm							in.	–	mm		–	mm	kg	
180 *7.087*	1 UNC	NPTF 1/2	NPTF 1.1/4	65	150	130	55	128	200	160	7.063	8	225	250	M 12	5	118	115
200 *7.874*	1 UNC	NPTF 1/2	NPTF 1.1/4	75	170	125	50	138	230	180	7.844	8	265	290	M 12	8	133	147
220 *8.661*	1 UNC	NPTF 1/2	NPTF 1.1/4	75	190	125	50	148	250	200	8.625	8	305	330	M 12	8	189	205
240 *9.449*	1 UNC	NPTF 1/2	NPTF 1.1/4	85	205	130	55	163	275	220	9.439	6	335	360	M 12	8	244	256
260 *10.236*	1 UNC	NPTF 1/2	NPTF 1.1/2	95	225	130	55	173	300	240	10.189	6	355	380	M 12	8	259	273
300 *11.811*	1 UNC	NPTF 1/2	NPTF 1.1/2	105	250	130	55	188	340	280	11.781	6	435	460	M 12	8	342	358
320 *12.598*	1 UNC	NPTF 1/2	NPTF 1.1/2	115	270	140	65	198	360	300	12.559	6	455	480	M 12	8	445	465

13.4 SBPN drying cylinder housings, with inch connection threads – short, wide base

d **180 – 320** mm
7.087 – 12.598 in.

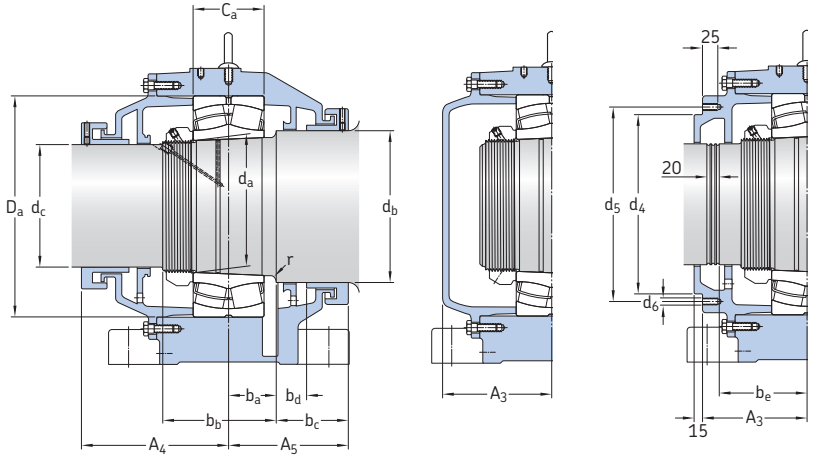

Housing for through shaft (designation suffix B)

Housing for shaft end (designation suffix A)

Housing for steam joint connection (designation suffix B42)

Shaft diameter d_a	Housing Designation	Appropriate parts Bearing[1]	Lock nut	Locking clip	Dimensions Housing A_1	A_3	A_4	A_5	C_a	D_a	H	H_1	H_2	J	J_1	L
mm/*in.*	–	–			mm											
180 *7.087*	**ASBPN 3136 FN9** **ASBPN 3136 RAN9**	23136 CCK/W33 C 3136 K	N 036	W 036	350	155	230	195	96	300	400	220	50	320	280	400
220 *8.661*	**ASBPN 3144 FN9** **ASBPN 3144 RAN9**	23144 CCK/W33 C 3144 K	N 044	W 044	410	175	255	200	120	370	490	265	60	380	340	490
260 *10.236*	**ASBPN 3152 FN9** **ASBPN 3152 RAN9**	23152 CCK/W33 C 3152 K	N 052	PL 52	445	200	280	225	144	440	570	310	75	470	375	580
300 *11.811*	**ASBPN 3160 FN9** **ASBPN 3160 RAN9**	23160 CCK/W33 C 3160 K	N 060	PL 60	480	215	290	235	160	500	630	335	85	560	410	670
320 *12.598*	**ASBPN 3164 FN9** **ASBPN 3164 RAN9**	23164 CCK/W33 C 3164 KM	N 064	PL 64	500	225	300	255	176	540	680	360	85	580	430	710

[1] 231(00) – spherical roller bearing, C... – CARB toroidal roller bearing. Only typical bearings are listed. Other bearing variants can also fit the housing.

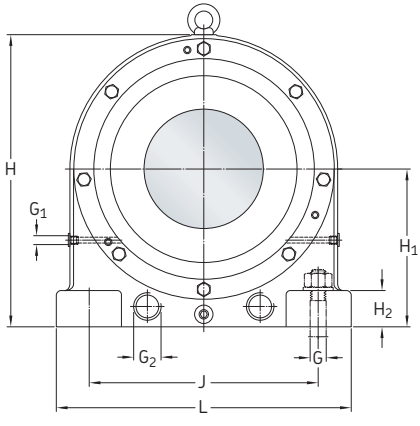

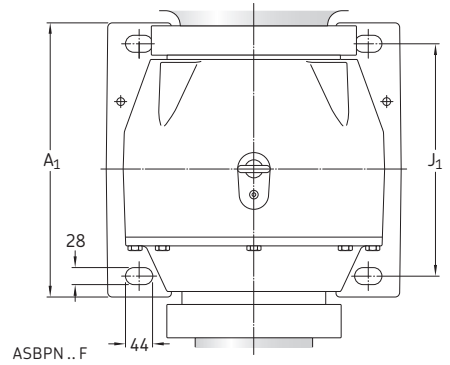

ASBPN .. F

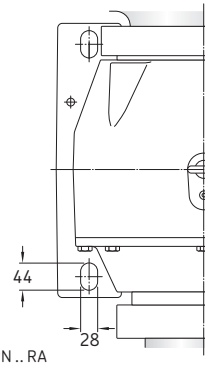

ASBPN .. RA

Shaft diameter	**Dimensions** Housing			Shaft								Threads/ inch					**Mass** Housing
d_a	G	G_1	G_2	b_a	b_b	b_c min.	b_d	b_e	d_b	d_c	d_d		d_4	d_5	d_6	r	
mm/*in.*	–			mm							in.	–	mm				kg
180 *7.087*	1 UNC	NPTF 1/2	NPTF 1.1/4	65	150	130	55	128	200	160	7.063	8	225	250	M 12	5	[1]
220 *8.661*	1 UNC	NPTF 1/2	NPTF 1.1/4	75	190	125	50	148	250	200	8.625	8	305	330	M 12	8	203
260 *10.236*	1 UNC	NPTF 1/2	NPTF 1.1/2	95	225	130	55	173	300	240	10.189	6	355	380	M 12	8	[1]
300 *11.811*	1 UNC	NPTF 1/2	NPTF 1.1/2	105	250	130	55	188	340	280	11.781	6	435	460	M 12	8	[1]
320 *12.598*	1 UNC	NPTF 1/2	NPTF 1.1/2	115	270	140	65	198	360	300	12.559	6	455	480	M 12	8	[1]

[1] Contact SKF for missing values.

13.5 SDM Yankee cylinder housings
d **340 – 600** mm

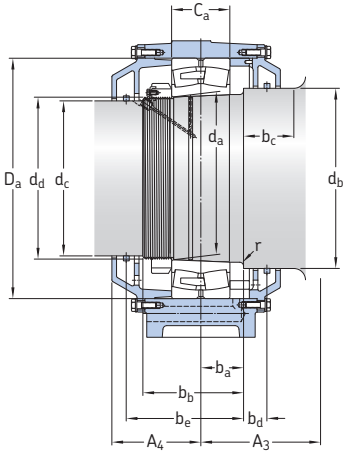

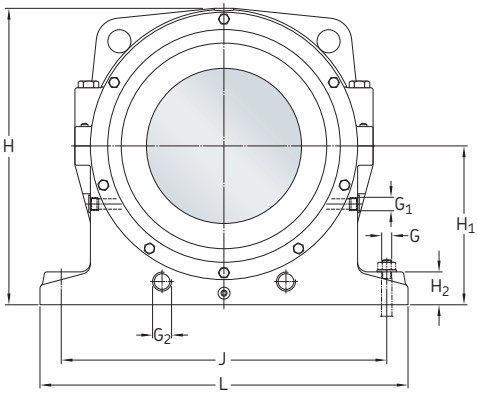

Shaft diameter d_a	Housing Designation	Appropriate parts Bearing[1]	Lock nut	Locking clip	Dimensions Housing A_1	A_3	A_4	C_a	D_a	H	H_1	H_2	J	J_1	L
mm	–	–			mm										
340	**SDM 3068 F** **SDM 3068 RA**	23068 CCK/W33 C 3068 K	HM 3068	MS 3068-64	260	195	210	133	520	650	345	75	760	170	860
	SDM 3168 F **SDM 3168 RA**	23168 CCK/W33 C 3168 KM	HM 3068	MS 3068-64	320	210	255	190	580	740	400	80	800	180	900
380	**SDM 3076 F** **SDM 3076 RA**	23076 CCK/W33 C 3076 K	HM 3076	MS 3080-76	260	200	220	135	560	710	380	80	790	170	890
420	**SDM 3084 F** **SDM 3084 RA**	23084 CAK/W33 C 3084 KM	HM 3084	MS 3084	280	205	230	150	620	765	410	85	840	180	950
	SDM 3184 F **SDM 3184 RA**	23184 CKJ/W33 C 3184 KM	HM 3084	MS 3084	400	290	310	224	700	910	480	85	1045	280	1165
460	**SDM 3092 F** **SDM 3092 RA**	23092 CAK/W33 C 3092 KM/C3	HM 3092	MS 3092-88	310	220	250	163	680	850	450	85	970	200	1090
530	**SDM 30/530 F** **SDM 30/530 RA**	230/530 CAK/W33 C 30/530 KM	HM 30/530	MS 30/600-530	360	240	270	185	780	960	510	85	1090	240	1200
	SDM 31/530 F **SDM 31/530 RA**	231/530 CAK/W33 C 31/530 KM	HM 30/530	MS 30/600-530	410	325	355	272	870	1065	550	85	1220	240	1360
600	**SDM 30/600 F** **SDM 30/600 RA**	230/600 CAK/W33 C 30/600 KM/C3	HM 30/600	MS 30/600-530	410	325	355	200	870	1065	550	85	1220	240	1360

[1] 23(000) and 23(0)/(000) – spherical roller bearing, C... – CARB toroidal roller bearing. Only typical bearings are listed. Other bearing variants can also fit the housing.

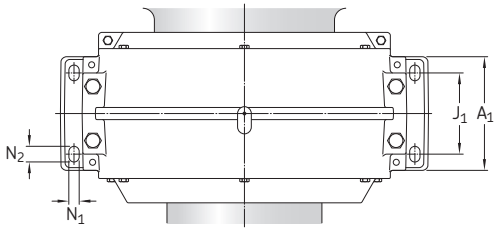

SDM .. RA

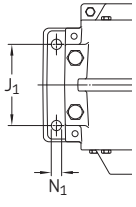

SDM .. F

Shaft diameter	**Dimensions** Housing					Shaft									**Mass** Housing
d_a	N_1	N_2	G	G_1	G_2	b_a	b_b	b_c min.	b_d	b_e	d_b	d_c	d_d	r	
mm	mm		–			mm							–	mm	kg
340	30	50	M 24	G 1	G 1.1/4	95	225	130	65	270	380	320	Tr 340x5	10	386
	30	50	M 24	G 1	G 2	130	295	110	48	353	390	320	Tr 340x5	10	572
380	30	50	M 24	G 1	G 1.1/4	95	230	135	70	280	420	360	Tr 380x5	10	475
420	30	50	M 24	G 1	G 1.1/2	110	260	130	60	305	465	400	Tr 420x5	10	494
	30	50	M 24	G 1	G 1.1/2	180	375	150	70	450	465	400	Tr 420x5	10	882
460	30	50	M 24	G 1	G 1.1/2	110	270	140	70	320	510	430	Tr 460x5	10	750
530	38	58	M 30	G 1	G 2	135	300	140	65	365	580	500	Tr 530x6	10	914
	38	58	M 30	G 1	G 2	195	425	160	85	505	590	500	Tr 530x6	10	1 530
600	38	58	M 30	G 1	G 2	160	345	195	120	470	660	560	Tr 600x6	15	1 550

13.5 SDM Yankee cylinder housings
d **630 – 670** mm

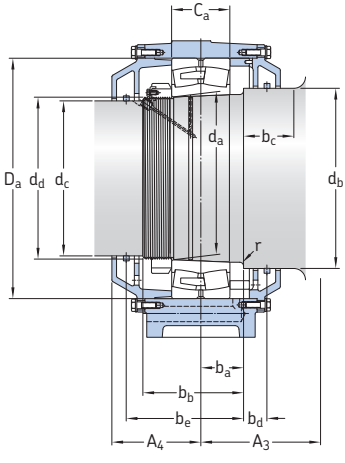

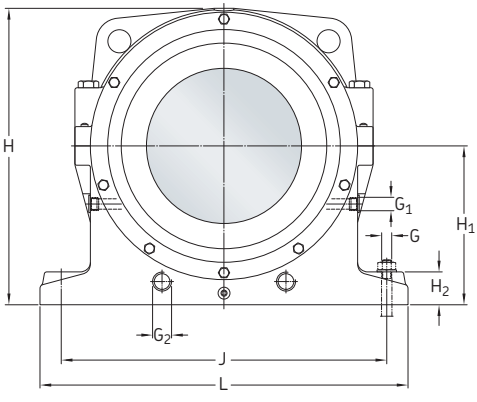

Shaft diameter d_a	Housing Designation	Appropriate parts Bearing[1]	Lock nut	Locking clip	Dimensions Housing A_1	A_3	A_4	C_a	D_a	H	H_1	H_2	J	J_1	L
mm	–	–			mm										
630	**SDM 31/630 F** **SDM 31/630 RA**	231/630 CAK/C3W33 C 31/630 KMB/HA3C4	HM 31/630	MS 31/630	510 [2]	[2]	[2]	315	1 030 [2]		700 [2]		1 330	350	1 500
670	**SDM 30/670 F** **SDM 30/670 RA**	230/670 CAK/W33 C 30/670 KM/HA3C4	HM 30/670	MS 30/670	420	300	330	230	980	1 180	620	85	1 260	300	1 380

[1] 23(000) and 23(0)/(000) – spherical roller bearing, C... – CARB toroidal roller bearing. Only typical bearings are listed. Other bearing variants can also fit the housing.
[2] Contact SKF for missing values.

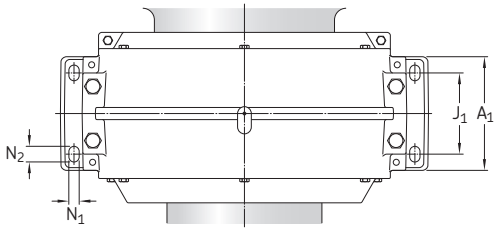

SDM .. RA

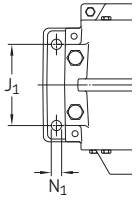

SDM .. F

Shaft diameter	**Dimensions** Housing					Shaft									**Mass** Housing
d_a	N_1	N_2	G	G_1	G_2	b_a	b_b	b_c min.	b_d	b_e	d_b	d_c	d_d	r	
mm	mm		–			mm							–	mm	kg
630	38	58	M 30	G 1	G 2	[1]	[1]	[1]	[1]	[1]	710	590	Tr 630x6	[1]	2 420
670	38	58	M 30	G 1	G 2	190	395	150	65	475	750	630	Tr 670x6	15	1 420

[1] Contact SKF for missing values.

13.6 SDM Yankee cylinder housings, with inch connection threads

d **340 – 600** mm
13.368 – 23.622 in.

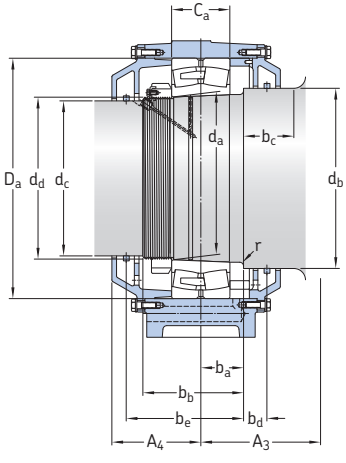

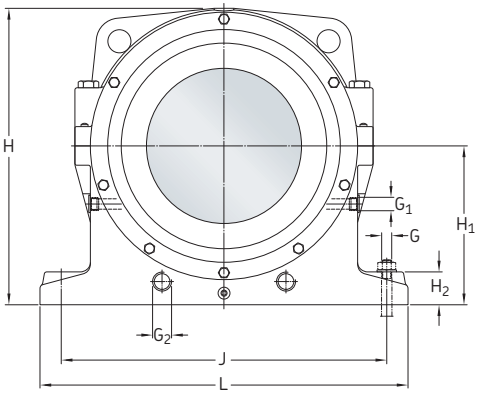

Shaft diameter d_a	Housing Designation	Appropriate parts Bearing[1]	Lock nut	Locking clip	Dimensions Housing A_1	A_3	A_4	C_a	D_a	H	H_1	H_2	J	J_1	L
mm/*in.*	–	–			mm										
340 *13.368*	**SDM 3068 FN9** **SDM 3068 RAN9**	23068 CCK/W33 C 3068 K	N 068	PL 68	260	195	210	133	520	650	345	75	760	170	860
	SDM 3168 FN9 **SDM 3168 RAN9**	23168 CCK/W33 C 3168 KM	N 068	PL 68	320	210	255	190	580	740	400	80	800	180	900
380 *14.961*	**SDM 3076 FN9** **SDM 3076 RAN9**	23076 CCK/W33 C 3076 K	N 076	PL 76	260	200	220	135	560	710	380	80	790	170	890
420 *16.535*	**SDM 3084 FN9** **SDM 3084 RAN9**	23084 CAK/W33 C 3084 KM	N 084	PL 84	280	205	230	150	620	765	410	85	840	180	950
	SDM 3184 FN9 **SDM 3184 RAN9**	23184 CKJ/W33 C 3184 KM	N 084	PL 84	400	290	310	224	700	910	480	85	1 045	280	1 165
460 *18.110*	**SDM 3092 FN9** **SDM 3092 RAN9**	23092 CAK/W33 C 3092 KM/C3	N 092	PL 92	310	220	250	163	680	850	450	85	970	200	1 090
530 *20.866*	**SDM 30/530 FN9** **SDM 30/530 RAN9**	230/530 CAK/W33 C 30/530 KM	N 530	PL 530	360	240	270	185	780	960	510	85	1 090	240	1 200
	SDM 31/530 FN9 **SDM 31/530 RAN9**	231/530 CAK/W33 C 31/530 KM	N 530	PL 530	410	325	355	272	870	1 065	550	85	1 220	240	1 360
600 *23.622*	**SDM 30/600 FN9** **SDM 30/600 RAN9**	230/600 CAK/W33 C 30/600 KM/C3	N 600	PL 600	410	325	355	200	870	1 065	550	85	1 220	240	1 360

[1] 23(000) and 23(0)/(000) – spherical roller bearing, C... – CARB toroidal roller bearing. Only typical bearings are listed. Other bearing variants can also fit the housing.

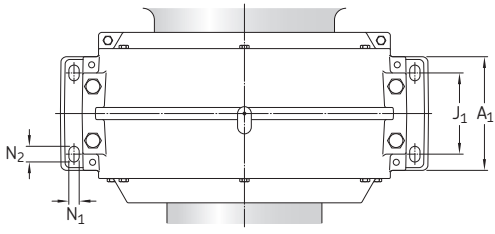

SDM .. RA

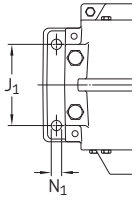

SDM .. F

Shaft diameter	**Dimensions** Housing					Shaft										**Mass** Housing
d_a	N_1	N_2	G	G_1	G_2	b_a	b_b	b_c min.	b_d	b_e	d_b	d_c	d_d	threads/ inch	r	
mm/*in.*	mm		in.			mm							in.	–	mm	kg
340 *13.368*	30	50	1 UNC	NPTF 1	NPTF 1.1/4	95	225	130	65	270	380	320	13.303	5	10	386
	30	50	1 UNC	NPTF 1	NPTF 2	130	295	110	48	353	390	320	13.303	5	10	572
380 *14.961*	30	50	1 UNC	NPTF 1	NPTF 1.1/4	95	230	135	70	280	420	360	14.921	5	10	475
420 *16.535*	30	50	1 UNC	NPTF 1	NPTF 1.1/2	110	260	130	60	305	465	400	16.496	5	10	494
	30	50	1 UNC	NPTF 1	NPTF 1.1/2	180	375	150	70	450	465	400	16.496	5	10	882
460 *18.110*	30	50	1 UNC	NPTF 1	NPTF 1.1/2	110	270	140	70	320	510	430	18.071	5	10	750
530 *20.866*	38	58	1.1/4 UNC	NPTF 1	NPTF 2	135	300	140	65	365	580	500	20.827	4	10	914
	38	58	1.1/4 UNC	NPTF 1	NPTF 2	195	425	160	85	505	590	500	20.827	4	10	1 530
600 *23.622*	38	58	1.1/4 UNC	NPTF 1	NPTF 2	160	345	195	120	470	660	560	23.583	4	15	1 550

13.6 SDM Yankee cylinder housings, with inch connection threads

d **630–670** mm

24.803 – 26.378 in.

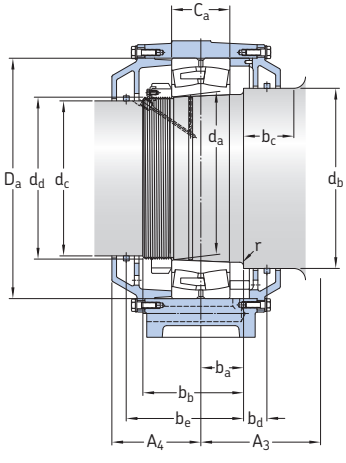

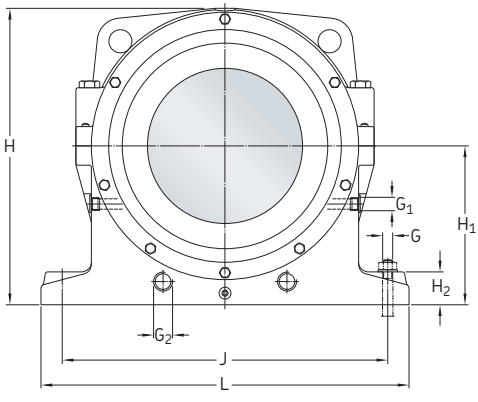

Shaft diameter d_a	Housing Designation	Appropriate parts Bearing[1]	Lock nut	Locking clip	Dimensions Housing A_1	A_3	A_4	C_a	D_a	H	H_1	H_2	J	J_1	L
mm/*in.*	–	–			mm										
630	**SDM 31/630 FN9**	231/630 CAK/C3W33	N 630	PL 630	510	[2]	[2]	315	1 030	[2]	700	[2]	1 330	350	1 500
24.803	**SDM 31/630 RAN9**	C 31/630 KMB/HA3C4													
670	**SDM 30/670 FN9**	230/670 CAK/W33	N 670	PL 670	420	300	330	230	980	1 180	620	85	1 260	300	1 380
26.378	**SDM 30/670 RAN9**	C 30/670 KM/HA3C4													

[1] 23(000) and 23(0)/(000) – spherical roller bearing, C... – CARB toroidal roller bearing. Only typical bearings are listed. Other bearing variants can also fit the housing.
[2] Contact SKF for missing values.

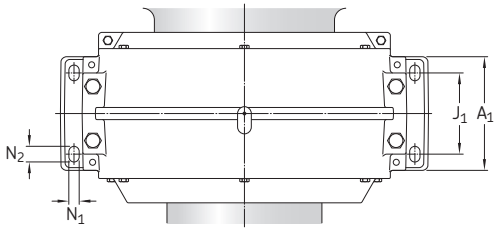

SDM .. RA

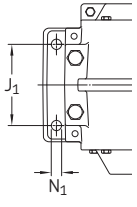

SDM .. F

Shaft diameter	**Dimensions** Housing					Shaft										**Mass** Housing
d_a	N_1	N_2	G	G_1	G_2	b_a	b_b	b_c min.	b_d	b_e	d_b	d_c	d_d	threads/ inch	r	
mm/*in.*	mm		in.			mm							in.	–	mm	kg
630 *24.803*	38	58	1.1/4 UNC	NPTF 1	NPTF 2	1)	1)	1)	1)	1)	710	590	24.760	4	1)	1)
670 *26.378*	38	58	1.1/4 UNC	NPTF 1	NPTF 2	190	395	150	65	475	750	630	26.339	4	15	1 420

1) Contact SKF for missing values.

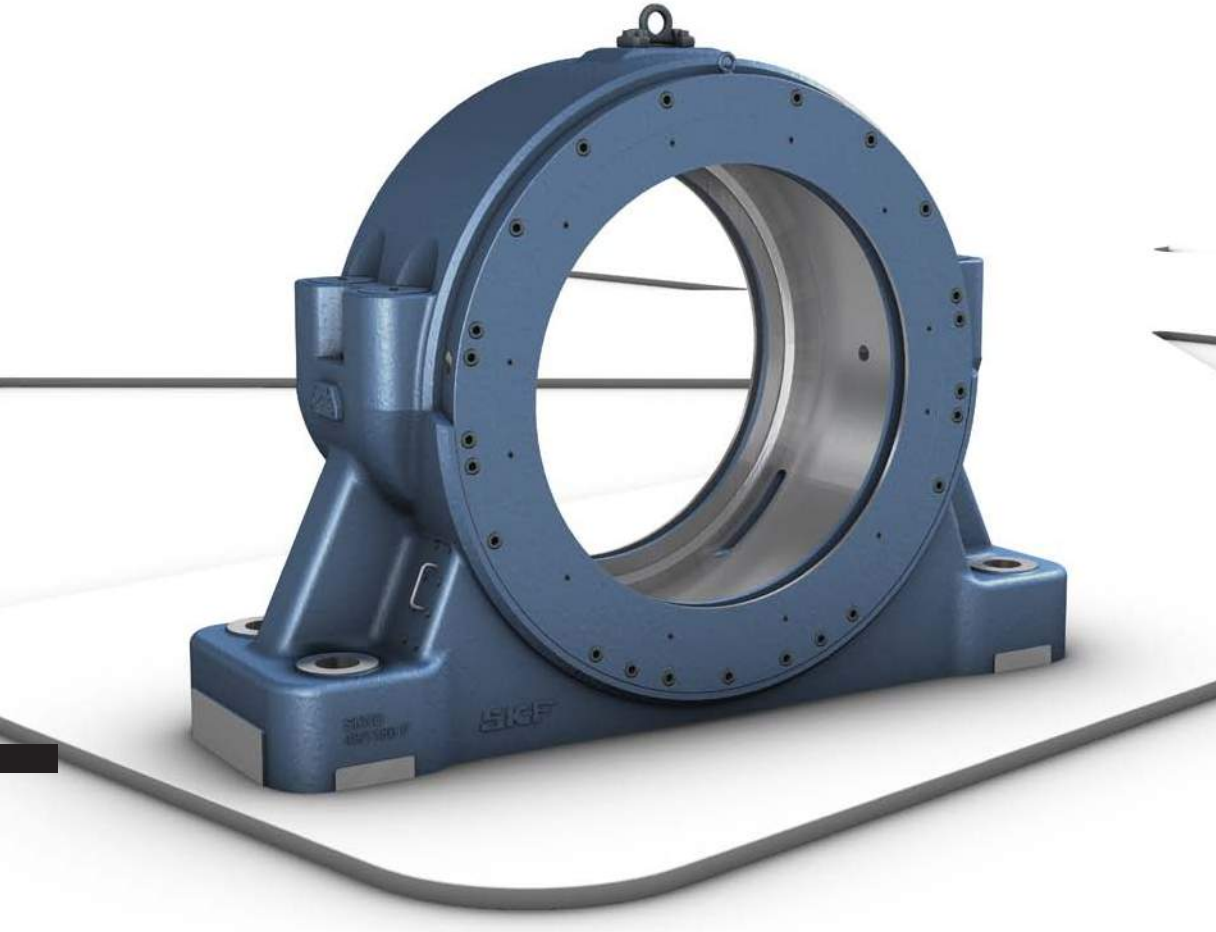
SKF

Split plummer block housings for converters in steel making SKND series

Bearing types
- Spherical roller bearings
- Split spherical roller bearings
- CARB toroidal roller bearings

Shaft diameter range
530 to 1 180 mm

Typical shaft-bearing combinations
Stepped trunnion with bearing on cylindrical seat

Seal
Lip seal with metal protecting ring

Lubrication
Grease

Material
Spheroidal graphite cast iron

Supersedes
SDKD

SKND plummer (pillow) block housings are robust housings, specially designed to withstand the harsh operating conditions surrounding LD and AOD converters. Whether manufacturing LD or AOD converters, the design of each component used to support the trunnion ring is driven by the challenges of contamination, heavy radial loads, misalignment and the induced axial loads that result from expansion and contraction of the trunnion ring. There is a simple solution to the challenge of induced axial loads. It's the total trunnion solution from SKF, which consists of the unique SKF self-aligning bearing system, combined with a re-designed housing and seals. The total trunnion solution avoids induced axial loads, eliminating the need for additional components.

Split plummer block housings for converters in steel making SKND series

Designations 625

Housing design 626
Features and benefits 628
Housing material 629
Dimension standards 628

Housing variants 628

Sealing solutions 628

Design considerations 630
Load carrying capacity 630
Operating temperature 630
Axial displacement 630

Lubrication 631
Initial grease fill 631
Relubrication 631
Grease sampling slots 631

Mounting 632
Axial support for the housing 632

Accessories 632

Ordering information 633

Product tables
14.1 SKND plummer block housings for converters 634

Designations

Designation system for SKND converter housings

SKND 49/950 F

Housing series

SKND	Converter housing

Size identification

30	Housing for bearings in the 230 and C30 series
49	Housing for bearings in the 249 and C49 series
/530	Bearing bore diameter [mm]

Suffixes

F	Housing for the locating bearing
L	Housing with sliding bushing
VC	Housing for CARB bearing

Designation system for seals

CS 1 000

Series

CS	Lip seal for SKND converter housings

Size identification

1 000	Sealing position shaft diameter (“d_b”) [mm]

Housing design

SKND converter housings are split housings consisting of a cap and base (→ **fig. 1**) and split housing covers and seal covers on each side. The base has four bosses that have been drilled and spotfaced to provide a flat surface for washers and attachment bolts.

There are three basic housing variants:

- Housings for locating (fixed) bearings (designation suffix F)
- Housings for non-locating (free or loose) spherical roller bearings (designation suffix L)
- Housings for non-locating CARB toroidal roller bearings (designation suffix VC)

Housings for the locating bearing position are initially mounted with non-split spherical roller bearings but due to downtime costs, the original bearings are replaced by split spherical roller bearings. For this reason, SKND... F converter housings are equipped with spacers that are initially mounted on each side of the bearing inner ring (→ **fig. 2**). Then, when the bearing needs to be replaced, a split spherical roller bearing, which has a wider inner ring than the original, can be mounted without any modifications to the housing.

Housings for non-locating bearings are available for spherical roller bearings and CARB toroidal bearings(→ **fig. 3**). Housings for spherical roller bearings contain a cast iron bushing that serves as the bearing seat in the housing. The outer ring of the spherical roller bearing slides in the bushing to accommodate thermal elongation of the shaft. Housings for CARB bearings do not contain a bushing because the bearing accommodates thermal elongation of the shaft internally, as well as misalignment of the inner ring relative to the outer ring.

Fig. 1

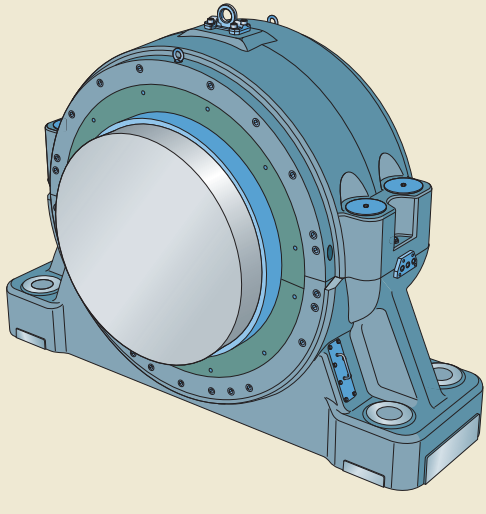

Fig. 2

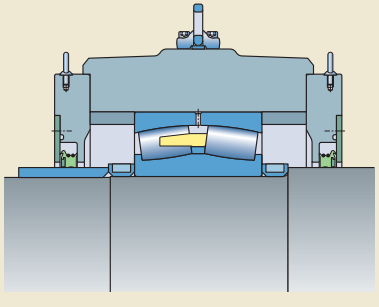

Spherical roller bearing in the locating bearing position

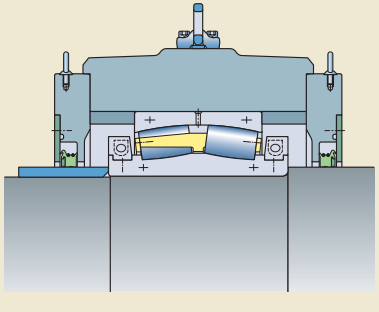

Split spherical roller bearing in the locating bearing position

Fig. 3

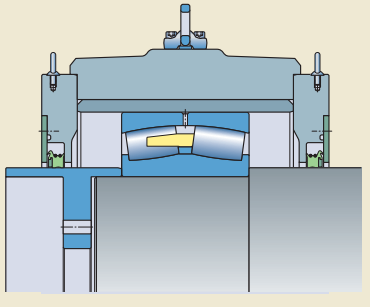

Spherical roller bearing in the non-locating bearing position

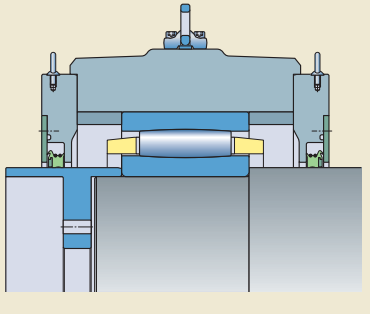

CARB bearing in the non-locating bearing position

Features and benefits

SKND converter housings have the following features:

Optimal design concerning strength and weight

SKND housings are designed to accommodate operational converter loads. Finite element analysis and advanced modeling programs helped to maximize stiffness and reduce total weight when compared to earlier designs (→ **fig. 4**).

Superbolt tensioners to join cap and base

Superbolt® multi-jack tensioners provide a simple, safe and accurate way to tighten cap bolts (→ **fig. 5**). The tensioner consists of a nut with jackbolts and a separate hardened steel washer. Once the bolt, washer and Superbolt have been assembled manually, the jackbolts can be tightened with a torque wrench. A disk-shaped cover protects the Superbolt from contaminants.

Machined pads simplify installation

Pads on the base ends and sides (→ **fig. 4**) are machined relative to the housing bore to simplify installation and alignment.

Designed to facilitate maintenance

SKND converter housings have built-in features to make installation and maintenance safer and easier. This includes reducing the number of components, which is particularly important during routine maintenance operations. On request, SKF can provide detailed mounting and maintenance instructions or on-site installation.

Fig. 4

Strengthened load zones

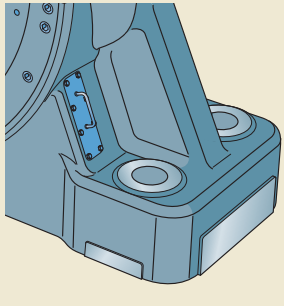

Fig. 5

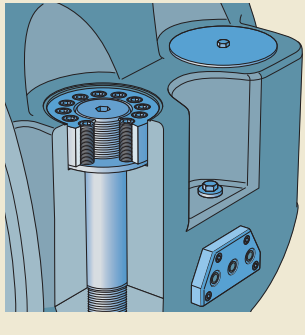

Housing material

SKND housings are made of spheroidal graphite cast iron. Cast steel is available on request.

Paint, corrosion protection

SKND converter housings are painted blue (RAL 5007) using a solvent based acrylic paint. The paint protects the housing in accordance with ISO 12944-2, corrosivity category C2 (i.e. exterior atmospheres with low level of pollution, interior atmospheres where condensation may occur) (→ *Environmental conditions*, **page 36**). The paint is not affected by most lubricating and engine oils, cutting fluids or alkalescent washing chemicals. Housings can be repainted with most water or solvent based 1- or 2-component paints.

Unpainted surfaces are treated with a solventless rust inhibitor.

Dimension standards

The boundary dimensions of SKND housings are not standardized either nationally or internationally.

Housing variants

In addition to the three basic housing variants (see housing design) SKND converter housings can be tailored with special features to meet the needs of a particular application. For additional information contact the SKF application engineering service.

Sealing solutions

SKND housings are equipped with a heavy-duty NBR double-lip contact seal. The seal incorporates a separate metal ring to protect against hot dust and slag (→ **fig. 6**).

Two springs provide tension on the seal so that it makes positive contact with the trunnion shaft. Grease in the chamber above the seal enhances the effectiveness of the seal. When relubricating the seal, the outer lip allows excess grease and any contaminants to be purged from the seal cavity. The inner seal lip prevents contaminated grease from entering the housing.

The NBR seal is cut to the proper length to provide a tight fit on the trunnion.

The designation for lip seals is CS followed by a size code, e.g. CS 570. The size code is the shaft diameter at the seal position (attribute "d_b" listed in the product tables).

Fig. 6

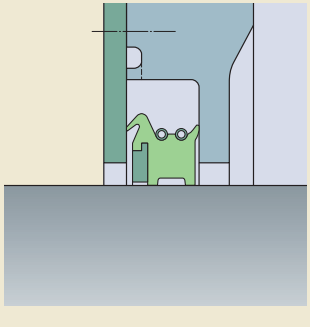

Design considerations

SKND housings for converters are application specific products. For designing converter bearing solutions, contact the SKF application engineering service. For additional information about rolling bearings, refer to the product information available online at skf.com/bearings.

Load carrying capacity

SKND housings are designed to accommodate the same loads as the incorporated bearing. For additional information, contact the SKF application engineering service.

Operating temperature

SKND housings and their seals are designed to withstand operating temperatures typical for converter environments. For additional information, contact the SKF application engineering service.

Axial displacement

The values for the maximal axial displacement of the non-locating bearing are listed in the product tables. Larger axial displacement in one direction can be accommodated by offset mounting the inner and outer rings of CARB bearings.

Lubrication

SKND converter housings are intended for grease lubrication. SKF recommends using SKF LGEV 2, which is a proven grease for converter applications. For additional information, contact the SKF application engineering service.

Initial grease fill

If no other requirements exist, the free space in the bearing should be completely filled with grease and the free space in the housing should be filled to 60% of its volume. SKF can provide values for the grease quantities for the relevant housing size. For additional information contact the SKF application engineering service.

Relubrication

SKND converter housings have central grease piping connectors on both sides of the housings to relubricate the bearing and seals (→ **fig. 7**). As the trunnion does not fully rotate, lubricant is provided from both sides. Lubricating the seals provides better contaminant exclusion to extend the service life of both the bearing and seal.

Housings with the suffix L, the variant with sliding bushings, have two additional relubrication holes positioned at the bottom of the housing to relubricate the sliding bushing (→ **fig. 8**).

Grease sampling slots

SKND converter housings have two grease sampling slots on each side (→ **fig. 9**) so that samples are taken directly from the bearing load zone. The slots can also be used to purge grease from the housing without removing the housing covers and seals.

Fig. 8

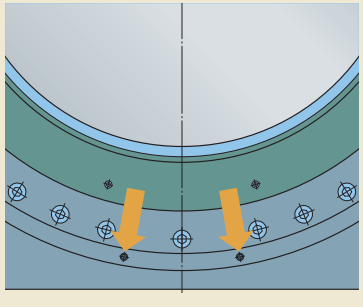

Fig. 7

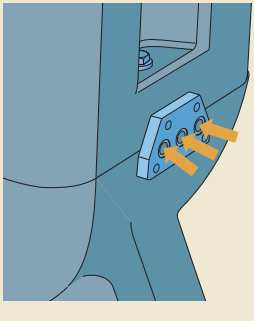

Fig. 9

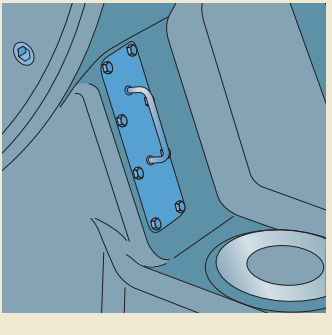

Mounting

SKND housings must be mounted and aligned properly, applying special knowledge and using the correct tools. SKF can provide detailed mounting instructions, assist during mounting or provide a complete installation service. For additional information, contact the SKF application engineering service.

Axial support for the housing

Stops should be placed against the pads on the ends and sides of the base. These stops should be sufficiently strong to accommodate operating loads acting parallel to the support surface.

Accessories

Axial position measuring system

For SKND converter housings an axial position measuring system is available. The system measures and reports the position of the trunnion end at the non-locating bearing position. It consists of a radially split reflector ring mounted on the trunnion end, two ultrasonic sensors for redundant measurements, a sensor fixture and protected and shielded cabling (→ **fig. 10**).

Fig. 10

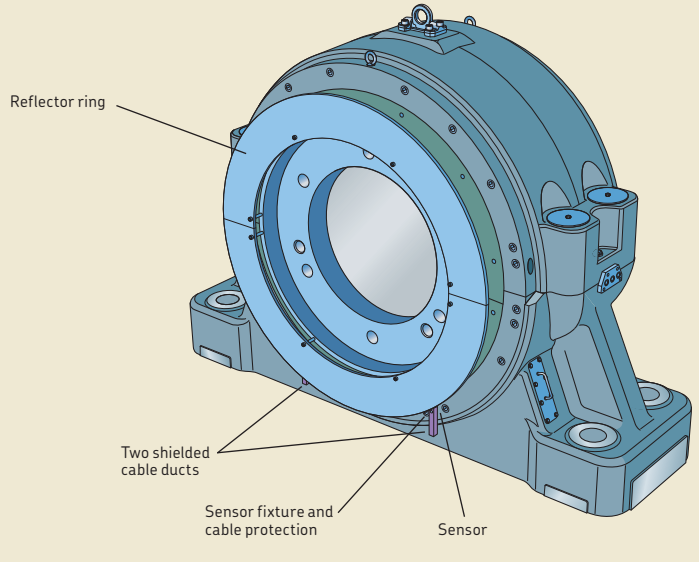

Temperature sensor

Temperature sensors for SKND housings can be supplied on request. For more information contact the SKF application engineering service.

Grease pumps and lubrication systems

Grease pumps and automatic lubrication systems for SKND housings are available from SKF. For additional information contact the SKF application engineering service or visit skf.com/lubrication.

Ordering information

For detailed information about ordering contact the SKF application engineering service.

14.1 SKND plummer block housings for converters

d_a **530 – 1 000** mm

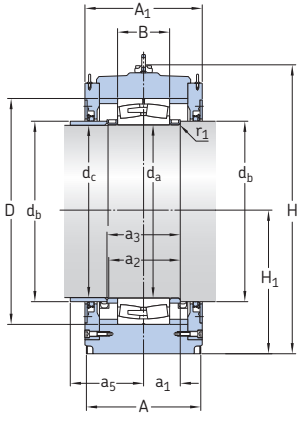

SKND .. F

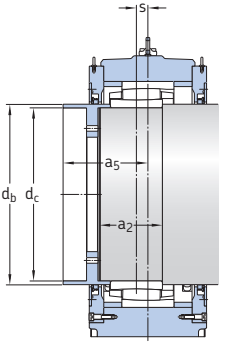

SKND .. VC

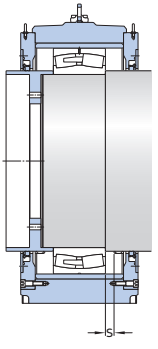

SKND .. L

Shaft diameter	Housing designation	Appropriate parts Bearing	Replacement bearing	Dimensions Housing						
d_a				A	B	D	A_1	H	H_1	H_2
mm	–	–		mm						
530	**SKND 30/530 F**	230/530 CA/C3W33	BSR-8024	400	185	780	475	935	450	140
	SKND 30/530 VC	C 30/530 M/VB569	–	400	185	780	475	935	450	140
600	**SKND 30/600 F**	230/600 CA/C3W33	BSR-8025	440	200	870	500	1 030	500	155
	SKND 30/600 VC	C 30/600 M/VB569	–	440	200	870	500	1 030	500	155
670	**SKND 30/670 F**	230/670 CA/C3W33	BSR-8035	500	230	980	540	1 170	570	175
	SKND 30/670 VC	C 30/670 M/VB569	–	500	230	980	540	1 170	570	175
710	**SKND 49/710 F**	249/710 CA/C3W33	BS2B 247249	600	243	950	640	1 250	600	185
	SKND 49/710 VC	C 49/710 MB1/VB569	–	600	243	950	640	1 250	600	185
	SKND 49/710 L	249/710 CA/C3W33VL017	–	600	243	950	640	1 250	600	185
750	**SKND 49/750 F**	249/750 CA/C3W33	BSR-8027	600	250	1 000	640	1 295	630	195
	SKND 49/750 VC	C 49/750 MB1/VB569	–	600	250	1 000	640	1 295	630	195
	SKND 49/750 L	249/750 CA/C3W33VL017	–	600	250	1 000	640	1 295	630	195
800	**SKND 49/800 F**	249/800 CA/C3W33	BS2B 243262	600	258	1 060	640	[1]	670	205
	SKND 49/800 VC	C 49/800 MB1/VB569	–	600	258	1 060	640	[1]	670	205
	SKND 49/800 L	249/800 CA/C3W33VL017	–	600	258	1 060	640	[1]	670	205
850	**SKND 49/850 F**	249/850 CA/C3W33	BSR-8028	600	272	1 120	640	1 430	700	220
	SKND 49/850 VC	C 49/850 MB1/VB569	–	600	272	1 120	640	1 430	700	220
	SKND 49/850 L	249/850 CA/C3W33VL017	–	600	272	1 120	640	1 430	700	220
900	**SKND 49/900 F**	249/900 CA/C3W33	BSR-8044	[1]	280	1 180	[1]	[1]	740	[1]
	SKND 49/900 VC	C 49/900 MB1/VB569	–	[1]	280	1 180	[1]	[1]	741	[1]
	SKND 49/900 L	249/900 CA/C3W33VL017	–	[1]	280	1 180	[1]	[1]	742	[1]
950	**SKND 49/950 F**	249/950 CA/C3W33	BSR-8029	690	300	1 250	710	1 630	780	250
	SKND 49/950 VC	C 49/950 MB1/VB569	–	690	300	1 250	710	1 630	780	250
	SKND 49/950 L	249/950 CA/C3W33VL017	–	690	300	1 250	710	1 630	780	250
1 000	**SKND 49/1000 F**	249/1000 CAF/C3W33	BSR-8045	[1]	315	1 320	[1]	[1]	830	255
	SKND 49/1000 VC	C 49/1000 MB1/VB569	–	[1]	315	1 320	[1]	[1]	830	255
	SKND 49/1000 L	249/1000 CAF/C3W33VL017	–	[1]	315	1 320	[1]	[1]	830	255

[1] Contact SKF for missing values.

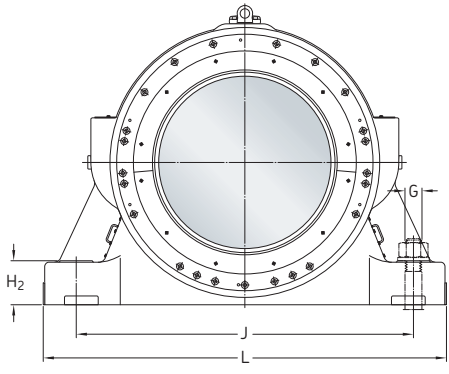

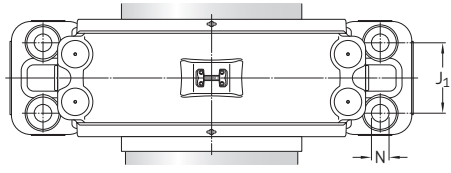

Shaft diameter	**Dimensions** Housing					**Axial displace-ment**	**Dimensions** Shaft abutment and fillet							**Mass** Housing
d_a	J	J_1	L	G	N	s	d_b	d_c	a_1	a_2	a_3	a_5	r_1	
mm	mm					mm	mm							kg
530	1 050	240	1 280	M 42	48	–	570	525	142,5	280	285	340	10	1)
	1 050	240	1 280	M 42	48	±35	570	530	92,5	225	–	340	5	1)
600	1 150	270	1 400	M 52	58	–	645	595	155	305	310	350	12	1)
	1 150	270	1 400	M 52	58	±35	645	600	100	245	–	350	5	1)
670	1 300	310	1 570	M 56	62	–	720	665	175	345	350	370	15	1)
	1 300	310	1 570	M 56	62	±40	720	670	115	275	–	370	6	1)
710	1 375	325	1 660	M 64	70	–	760	705	175	345	350	420	15	1)
	1 375	325	1 660	M 64	70	±50	760	710	121,5	330	–	420	5	1)
	1 375	325	1 660	M 64	70	±50	760	710	121,5	330	–	420	5	1)
750	1 450	335	1 750	M 64	70	–	800	745	177,5	350	355	420	15	1)
	1 450	335	1 750	M 64	70	±55	800	750	125	340	–	420	5	1)
	1 450	335	1 750	M 64	70	±55	800	750	125	340	–	420	5	1)
800	1 550	345	1 850	M 72	80	–	860	795	185	365	370	420	15	1)
	1 550	345	1 850	M 72	80	±55	860	800	129	350	–	420	5	1)
	1 550	345	1 850	M 72	80	±55	860	800	129	350	–	420	5	1)
850	1 600	360	1 940	M 72	80	–	900	845	192,5	380	385	420	15	1)
	1 600	360	1 940	M 72	80	±60	900	850	136	365	–	420	5	1)
	1 600	360	1 940	M 72	80	±60	900	850	136	365	–	420	5	1)
900	1)	1)	1)	1)	1)	–	960	895	195	385	390	1)	15	1)
	1)	1)	1)	1)	1)	±60	960	900	1)	1)	–	1)	1)	1)
	1)	1)	1)	1)	1)	±60	960	900	1)	1)	–	1)	1)	1)
950	1 820	390	2 180	M 90	100	–	1 000	945	205	405	410	455	15	5 200
	1 820	390	2 180	M 90	100	±65	1 000	950	150	355	–	455	6	5 100
	1 820	390	2 180	M 90	100	±65	1 000	950	150	355	–	455	6	4 900
1 000	1 980	360	2 330	M 90	100	–	1 065	995	225	445	450	1)	15	1)
	1 980	360	2 330	M 90	100	±65	1 065	1 000	157,5	405	–	1)	6	1)
	1 980	360	2 330	M 90	100	±65	1 065	1 000	157,5	405	–	1)	6	1)

1) Contact SKF for missing values.

14.1 SKND plummer block housings for converters

d_a **1 060 – 1 180** mm

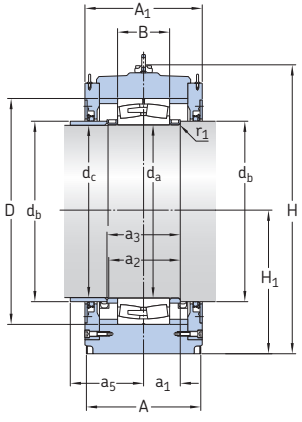

SKND .. F

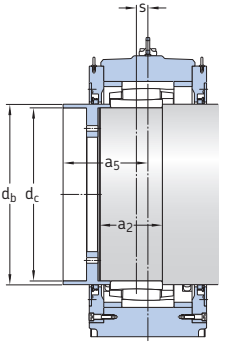

SKND .. VC

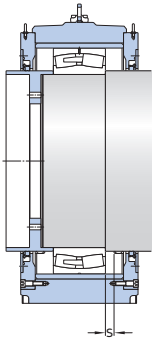

SKND .. L

Shaft diameter	Housing designation	Appropriate parts Bearing	Replacement bearing	Dimensions Housing						
d_a				A	B	D	A_1	H	H_1	H_2
mm	–	–		mm						
1 060	**SKND 49/1060 F**	249/1060 CAF/C3W33	BSR-8039	740	335	1 400	[1]	[1]	880	275
	SKND 49/1060 VC	C 49/1060 MB1/VB569	–	740	335	1 400	[1]	[1]	880	275
	SKND 49/1060 L	249/1060 CAF/C3W33VL017	–	740	335	1 400	[1]	[1]	880	275
1 120	**SKND 49/1120 F**	249/1120 CAF/C3W33	BSR-8040	780	335	1 460	760	1 900	920	285
	SKND 49/1120 VC	C 49/1120 MB1/VB569	–	780	335	1 460	760	1 900	920	285
	SKND 49/1120 L	249/1120 CAF/C3W33VL017	–	780	335	1 460	760	1 900	920	285
1 180	**SKND 49/1180 F**	249/1180 CAF/C3W33	BSR-8031	780	355	1 540	800	1 970	970	300
	SKND 49/1180 VC	C 49/1180 MB1/VB569	–	780	355	1 540	800	1 970	970	300
	SKND 49/1180 L	249/1180 CAF/C3W33VL017	–	780	355	1 540	800	1 970	970	300

[1] Contact SKF for missing values.

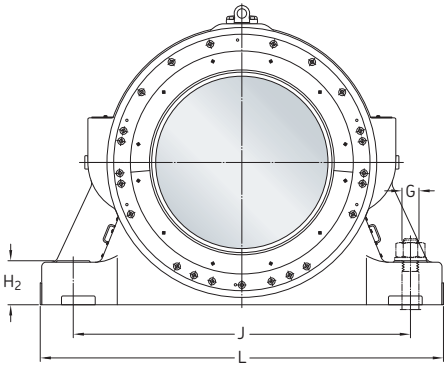

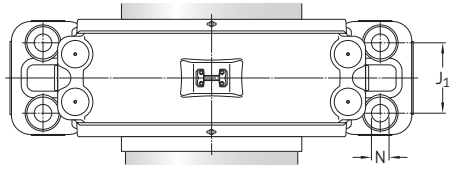

Shaft diameter	**Dimensions** Housing					**Axial displacement**	**Dimensions** Shaft abutment and fillet							**Mass** Housing
d_a	J	J_1	L	G	N	s	d_b	d_c	a_1	a_2	a_3	a_5	r_1	
mm	mm					mm	mm							kg
1 060	2 000	460	2 450	M 100	110	–	1 110	1 055	237,5	470	475	[1]	15	[1]
	2 000	460	2 450	M 100	110	±75	1 110	1 060	167,5	420	–	[1]	6	[1]
	2 000	460	2 450	M 100	110	±75	1 110	1 060	167,5	420	–	[1]	6	[1]
1 120	2 150	460	2 560	M 100	110	–	1 195	1 115	237,5	470	475	480	15	7 500
	2 150	460	2 560	M 100	110	±75	1 195	1 120	167,5	420	–	480	6	7 400
	2 150	460	2 560	M 100	110	±70	1 195	1 120	167,5	420	–	480	6	7 100
1 180	2 300	480	2 750	M 110	120	–	1 230	1 175	250	495	500	500	15	8 700
	2 300	480	2 750	M 110	120	±80	1 230	1 180	177,5	430	–	500	6	8 500
	2 300	480	2 750	M 110	120	±70	1 230	1 180	177,5	430	–	500	6	8 200

[1] Contact SKF for missing values.



Trunnion bearing housings for grinding mills FSDR .. K series

Bearing types
- Spherical roller bearings

Bearing dimension series
- 39, 48 and 49

Shaft diameter range
- 825 to 1 460 mm

Typical bearing-shaft combinations
- Stepped shaft with bearing on an unthreaded sleeve

Seals
- Labyrinth, V-ring, PTFE strip

Lubrication
- Grease

Materials
- Grey cast iron
- Spheroidal graphite cast iron

Mounting
- Four-bolt mounting

Compliance to standards
- Not standardized

FSDR .. K housings are large low-weight plummer (pillow) block housings designed specifically for grinding mills. They operate under arduous conditions in highly contaminated environments. With their highly effective sealing solution, they enable the incorporated bearing to achieve maximum service life by preventing the ingress of contaminants and enabling easy access for inspection and maintenance when necessary.

Trunnion bearing housings for grinding mills FSDR .. K series

Designations 641

Standard housing design 642
Features and benefits 642
Housing material 644
Paint, corrosion protection 644
Dimension standards 644

Housing variants 644

Sealing solutions 645

Design considerations 648
Typical shaft-bearing combinations . . . 648
Locating and non-locating bearing positions 648
Load carrying capacity 648
Operating temperature 649
Operating speed 649
Shaft specifications 649
Attachment bolt recommendations 649

Lubrication 650
Initial grease fill 650
Relubrication 651

Mounting 652
Torque specifications 652
Ventilation valves 652
Eye bolts and lifting holes 652
Supporting the housing 652

Condition monitoring 653

Accessories 653

Ordering information 654

Product tables
15.1 FSDR .. K grinding mill housings . . 656

Designations

Designation system for FSDR .. K trunnion bearing housings

FSDR_ 39/1060 K/P45

Series

FSDR Trunnion bearing housing for grinding mills

Material

– Grey cast iron
D Spheroidal graphite cast iron

Size identification

../.. Bearing dimension series / bearing bore diameter [mm]

Suffixes[1)]

– Housing with metric threads and G threads for grease fittings
K Housing for bearings with a tapered bore on a split unthreaded sleeve and a stepped shaft
N9 Housing with inch threads and NPTF threads for grease fittings
/P... Painting variant according to customer specification (P01 to P999)

1) When multiple suffixes are used, they are listed in the same order as shown here.

Designation system for V-ring seals

1280 VRME R

Size identification

... Diameter of the V-ring seal

Design

VRME V-ring seal with longer lip to allow larger axial movements

Material

R Acrylonitrile-butadiene rubber (NBR)

Standard housing design

FSDR .. K plummer (pillow) block housings are split housings consisting of a cap and base, and two covers (→ **fig. 1**). The cap has two integral flanges, with a hole cast into each one. The base has four cast holes for attachment bolts. The split covers, which contain an eye bolt in each half, are attached to the housing body with eight bolts. The labyrinth rings are supplied with eye bolts that can be removed after mounting.

Features and benefits

FSDR .. K housings have the following features and benefits:

Superior sealing solution

The SKF multi-stage labyrinth seal, which is standard for all trunnion bearing housings, is a highly effective sealing solution that can prevent the ingress of contaminants even during high-pressure wash downs.

The inclined outside face of the labyrinth ring helps to prevent water and contaminants from entering the labyrinth (→ **fig. 2**).

Fig. 1

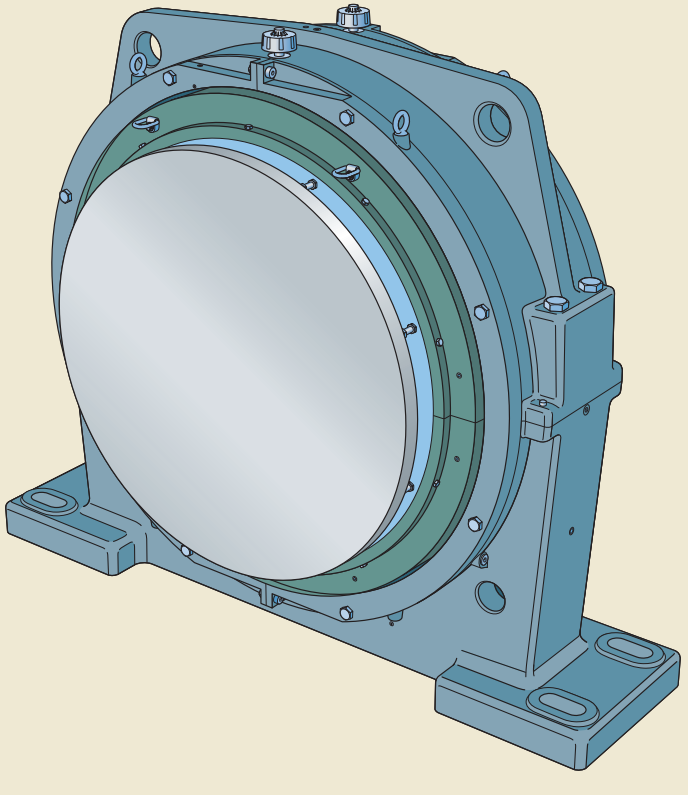

Reduced grease consumption

Trunnion bearing housings typically require large amounts of grease at frequent intervals, to purge contaminants from the bearing and housing. With SKF grinding mill housings however, the highly effective multi-stage labyrinth seal makes it possible to extend relubrication intervals, helps to eliminate overgreasing and reduce grease consumption.

Easy access for inspection and maintenance

The covers and labyrinth rings are split for easy removal. This enables the housing, bearing and seals to be inspected, or replaced, and used grease to be removed, without dismounting the housing.

Machined base ends

The base ends of FSDR .. K housings are machined to make alignment easier and to provide a flat surface for stops (→ **fig. 3**).

Ventilating valves

Ventilating valves are supplied with the housing (→ **fig. 4**). They help to prevent high pressures, which can be caused by heat, from building up in the housing. The valves have a 2 µm dirt filter.

Fig. 2

Sealing solution with one V-ring seal

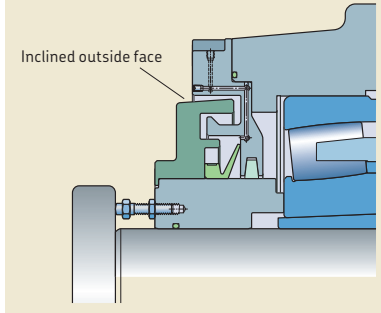

Fig. 3

Machined base ends

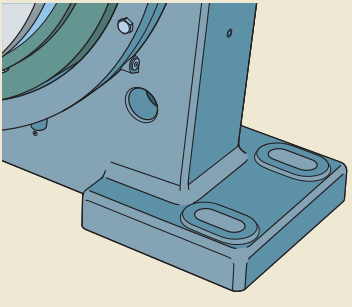

Fig. 4

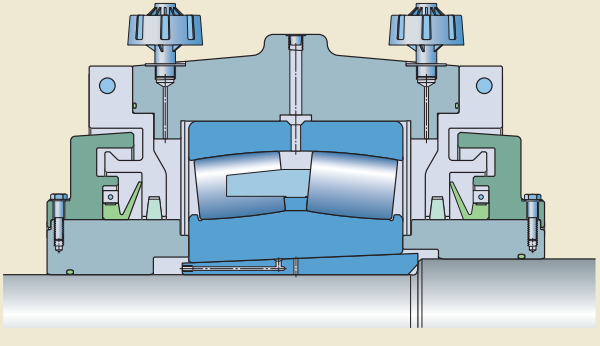

Housing material

FSDR .. K housings are made of grey cast iron.

Paint, corrosion protection

FSDR .. K housings are painted black (RAL 9005) using a solvent based acryl paint. The paint protects the housing in accordance with ISO 12944-2, corrosivity category C2 (i.e. exterior atmospheres with low level of pollution, interior atmospheres where condensation may occur). The paint is not affected by most lubricating or engine oils, cutting fluids or alkalescent washing chemicals. Housings can be repainted with most water or solvent based 1- or 2-component paints.

Unpainted surfaces are protected with a solventless rust inhibitor.

Dimension standards

The boundary dimensions of FSDR .. K housings are not standardized either nationally or internationally.

Housing variants

In addition to standard design FSDR .. K housings, a number of variants are also available.

Housing material

For applications where extra strength is needed, the housings are available in spheroidal graphite cast iron, designation FSDRD .. K.

Inch thread connections

FSDR .. K housings can be supplied with UNC or NPTF threads for grease fittings. The housings are identified by the designation suffix N9, e.g. FSDR 39/1060 KN9. For additional information, contact the SKF application engineering service.

Special paint

FSDR .. K housings can be supplied painted according to customer specification. The housings are identified by the designation suffix P, followed by a two or three-digit number, e.g. FSDR 39/1060 K/P45.

Sealing solutions

FSDR .. K housings are designed for two sealing solutions (→ **fig. 5**):

- a labyrinth seal in combination with one V-ring seal and a PTFE strip, for all housings except size 49/1320
- a labyrinth seal in combination with two V-ring seals, for housings size 49/1320

Table 1, **page 646**, provides an overview of the characteristics and suitability of both sealing solutions. Additional information is provided in the following text. This information should be used as a guideline, which cannot substitute for testing a seal in its application.

The labyrinth seal consists of two parts: the housing cover and a labyrinth ring. Both are split. The cover is bolted to the housing body and does not rotate. The labyrinth ring is bolted onto a shaft sleeve and rotates with the shaft. The V-ring seals have a long seal lip that seals axially against the cover. They are located radially by steel clamping bands and axially by the labyrinth ring. For housings with one V-ring seal, a PTFE strip, mounted in a groove in the cover, provides additional protection.

Labyrinth seals are supplied together with the housing, but can also be ordered separately. Contact SKF for additional information. Shaft sleeves are also supplied with the housing.

NOTE: V-ring seals and band clamps must be ordered separately. Appropriate V-ring seals and band clamps are listed in **table 2**, **page 647**.

Fig. 5

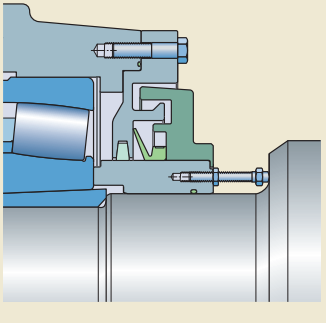

Labyrinth seal with one V-ring seal

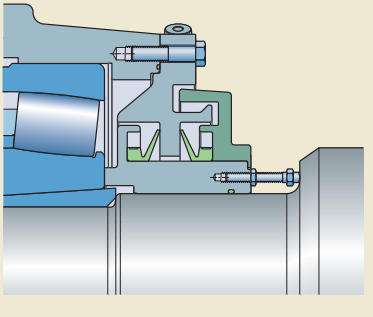

Labyrinth seal with two V-ring seals

Table 1

Seals for FSDR .. K trunnion bearing housings for grinding mills

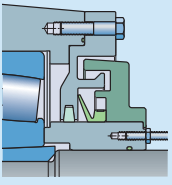

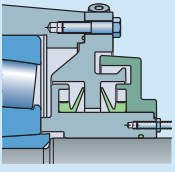

Seal		
Type	labyrinth seal with 1 V-ring seal	labyrinth seal with 2 V-ring seals
Housing size range	39/850, 39/1060, 39/1180 and 48/1500	49/1320
Material		
labyrinth seal	grey cast iron	grey cast iron
V-ring seals	rubber (NBR)	rubber (NBR)
PTFE strip	PTFE impregnated fibres (ramie)	n/a
Application conditions and requirements		
Temperature [°C]	–40 to +100	–40 to +100
Temperature [°F]	–40 to +210	–40 to +210
Max. circumferential speed [m/s]	2	10
Max. misalignment [°]	0,5	0,5
Low friction	+	++
Axial shaft displacement [mm]	± 10	± 10
Replacement	++	++
Shaft tolerance class	h9Ⓔ	h9Ⓔ
Shaft roughness R_a [µm]	≤ 3,2	≤ 3,2
Sealing suitability		
Dust	++	++
Fine particles	++	++
Coarse particles	++	++
Chips	++	++
Liquids when sprayed	++	++
Direct sunlight	++	++

Symbol:
n/a not applicable
++ very suitable
+ suitable
– limited suitability
–– unsuitable

Table 2

Clamping bands for V-ring seals

Housing Size	**V-ring seal** Designation	**Clamping bands** Qty.	 Designation
FSDR 39/850 K	960 VRME R	2 2 2	RM 15 Art. No. 25538099 Length 1500 RM 10 Art. No. 25537099 Length 1000 RM ADJUST Art. No. 25539099 Length 600
FSDR 39/1060 K	1180 VRME R	4 2	RM 15 Art. No. 25538099 Length 1500 RM ADJUST Art. No. 25539099 Length 700
FSDR 39/1180 K	1280 VRME R	4 2	RM 15 Art. No. 25538099 Length 1500 RM 10 Art. No. 25537099 Length 1000
FSDR 49/1320 K	1425 VRME R	12	RM 15 Art. No. 25538099 Length 1500
FSDR 48/1500 K	1575 VRME R	6 2	RM 15 Art. No. 25538099 Length 1500 RM ADJUST Art. No. 25539099 Length 600

Design considerations

For general information about design considerations, refer to the following sections:

- *Typical shaft-bearing combinations* (→ **page 41**)
- *Locating/non-locating bearing arrangements* (→ **page 40**)
- *Specifications for shafts and housing support surfaces* (→ **page 45**)
- *Axial load carrying capacity for bearings on a sleeve* (→ **page 44**)

For additional information about rolling bearings, refer to the product information available online at skf.com/bearings.

Typical shaft-bearing combinations

FSDR .. K housings accommodate bearings with a tapered bore on an unthreaded sleeve on stepped shafts (→ **fig. 6**).

Locating and non-locating bearing positions

FSDR .. K housings can be used for both the locating and non-locating bearing positions.

Fig. 6

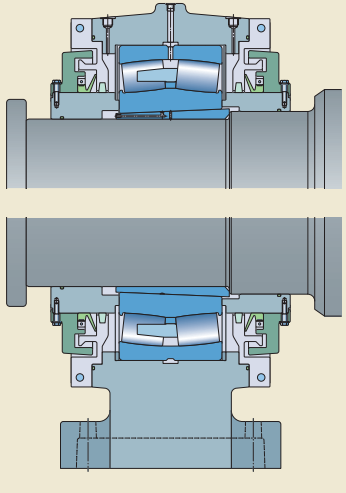

The housings are machined standard for bearings in the non-locating position. The bearing seat is sufficiently wide to allow axial displacement of the bearing. The seat tolerance provides a loose fit for the bearing even if there is a temperature difference between the bearing outer ring and housing.

Bearings in the locating position must be secured in the housing on both sides with locating rings. These are supplied with the housings.

Load carrying capacity

FSDR .. K housings are intended for loads acting perpendicularly toward the support surface as well as the forces created in the process. In cases like this, the housing can withstand the same loads as the bearing. If loads acting in other directions occur, contact the SKF application engineering service.

Additional housing support

As the housings are subjected to loads acting parallel to the support surface, a stop must be provided to counter the load. The housings can be secured to the support with keys or welded stops.

The stop should be sufficiently strong to accommodate the loads acting parallel to the support surface.

Operating temperature

The permissible operating temperature is limited by the seals (→ **table 1**, **page 646**). For temperature limits of SKF bearings and lubricants, refer to the product information available online at skf.com/bearings.

The housing material does not have any additional temperature limits, except for very low temperatures where impact strength could be a factor.

The housing paint is heat resistant up to 80 °C (*175 °F*) material temperature or 100 °C (*210 °F*) ambient temperature.

When temperatures outside the permissible range are expected, contact the SKF application engineering service.

Operating speed

The seals limit the permissible operating speed. Speed limits for the seals are provided in **table 1** on **page 646**.

Shaft specifications

The bearing seat should be machined according to the requirements for bearings mounted on an adapter sleeve (→ *Specifications for shafts and housing support surfaces*, **page 45**), i.e. with a shaft tolerance class h9 Ⓔ and a cylindricity tolerance of IT5/2. The seal counterface should also comply with these specifications.

Attachment bolt recommendations

In typical applications, 8.8 class hexagon head bolts in accordance with ISO 4014 can be used together with washers in accordance with ISO 7089 or 7090. If the load does not act perpendicularly toward the base, it may be necessary to use stronger 10.9 class bolts.

SKF housings can withstand loads resulting from tightening the attachment bolts to the torque values recommended by bolt manufacturers (→ **table 3**). They are valid for oiled, but otherwise untreated, thread surfaces. SKF cannot guarantee that tightening to the recommended value provides sufficient anchoring. Make sure that attachment bolts, stops, and a sufficiently strong support can accommodate all occurring loads.

Table 3

Torques values for cap bolts and attachment bolts

Housing	Cap bolts		Attachment bolts	
Size	Size	Tightening torque	Size	Tightening torque[1]
–	–	Nm	–	Nm
FSDR 39/850 K	M 36	600	M 48	5 450
FSDR 39/1060 K	M 36	600	M 52	6 990
FSDR 39/1180 K	M 36	600	M 52	6 990
FSDR 49/1320 K	M 42	850	M 52	6 990
FSDR 48/1500 K	M 42	850	M 52	6 990

[1] Recommended by bolt manufacturers.

Lubrication

FSDR .. K housings are intended for grease lubrication. The lubricant should be selected based on the operating conditions of the bearings. For additional information about lubricant selection, refer to the product information available online at skf.com/bearings.

Initial grease fill

If no other requirements exist, the free space in the bearing as well as the gaps of the labyrinth seals should be completely filled with grease. The seal counterfaces should be thoroughly greased. No extra grease is required for the housing.

During start up, additional grease (typically 20 to 60 kg, depending on bearing size) should be added to the bearing over a 30-minute period via the annular groove and relubrication holes in the bearing outer ring.

Detailed information about the initial grease fill is provided in the mounting instructions, which are available on request.

Fig. 7

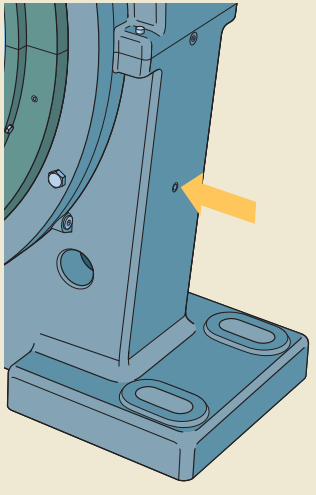

Relubrication

The spherical roller bearings used in FSDR .. K housings can be relubricated via two drilled and tapped G 3/8 holes in the housing base (→ **fig. 7**). SKF recommends using an automatic lubrication system like the SKF MultiLube pumping unit (→ *Centralized lubrication systems*, **page 48**).

Relubrication instructions (which form part of the mounting instructions for the housings) are available on request.

Relubricating the seals

FSDR .. K housings with one V-ring per side have two drilled and tapped G 1/8 holes in the cover on each side of the housing. Grease introduced in either of the holes will relubricate both the V-ring and the labyrinth seal. Choose the hole that is most convenient (→ **fig. 8**).

FSDR .. K housings size 49/1320 with two V-rings per side have three drilled and tapped holes in the cover on each side of the housing. The hole that supplies grease to the space between the two V-rings has two alternative grease inlets (both G 3/8). Choose the one that is most convenient (→ **fig. 9**). The single hole (G 1/8) supplies lubricant to the labyrinth seal (→ **fig. 10**).

Renewal

Used grease should be replaced with fresh grease on a regular basis, typically every two to three years. Grease samples should be drawn and analyzed, and the interval adjusted accordiningly. To simplify the renewal process, the covers and labyrinth rings are split and can be removed without removing the cap.

Fig. 8

Relubricating the labyrinth between the outer seal and cover (one V-ring)

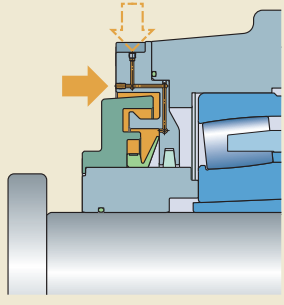

Fig. 9

Relubricating the space between two V-rings

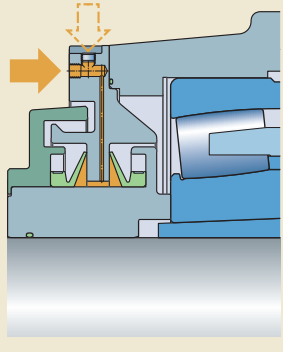

Fig. 10

Relubricating the labyrinth between the outer seal and cover (two V-rings)

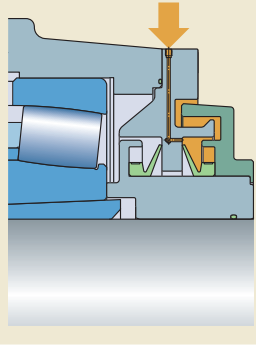

Mounting

FSDR .. K housings must be mounted properly using the appropriate tools and state of the art mechanical mounting methods.

Mounting instructions for the housings are available on request.

Torque specifications

The M 24 cover bolts supplied with all housings should be tightened to 665 Nm. The cover bolts are in accordance with ISO 4014.

The M 12 labyrinth ring bolts (in accordance with ISO 4017) supplied with the labyrinth seals should be tightened to 80 Nm.

Cap bolts should be tightened to the torque values listed in **table 3** on **page 649**.

For information about attachment bolts, refer to *Attachment bolt recommendations* on **page 649**.

Ventilating valves

The ventilating valves should be installed on top of the housing cap for use when the housing is in operation. The holes for the valves are plugged on delivery.

Eye bolts and lifting holes

FSDR .. K housings have a cast hole in each integral flange on the cap and one M 16 eye bolt in each cover half (→ **fig. 11**) for safe, easy handling. The labyrinth rings are equipped with adjustable eye bolts (VLBG 0.63t M 10 with bolt, except for size 49/1320, which has M 10 eye bolts) that can be removed after mounting.

Supporting the housing

FSDR housings require two stops, one on each side of the housing, to accommodate loads acting parallel to the housing support surface.

Fig. 11

Eye bolts

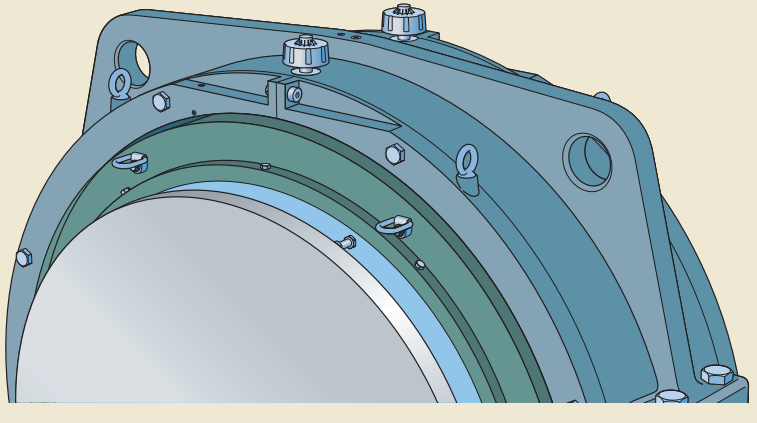

Condition monitoring

FSDR .. K grinding mill housings have seven drilled and tapped M8 holes for condition monitoring sensors (→ **fig. 12**).

Position 1 and **position 2** (on both sides of the housing) are perpendicular to the shaft.

Positions 3 and **4** (both positions available on both sides of the housing) are parallel to the shaft.

All positions are in accordance with ISO 10816-1.

Accessories

The following accessories are available for FSDR .. K housings:

- Automatic lubricator: SKF MultiLube pumping unit
- Condition monitoring sensors

For additional information, refer to the section *SKF tools and products* (→ **page 47**).

Fig. 12

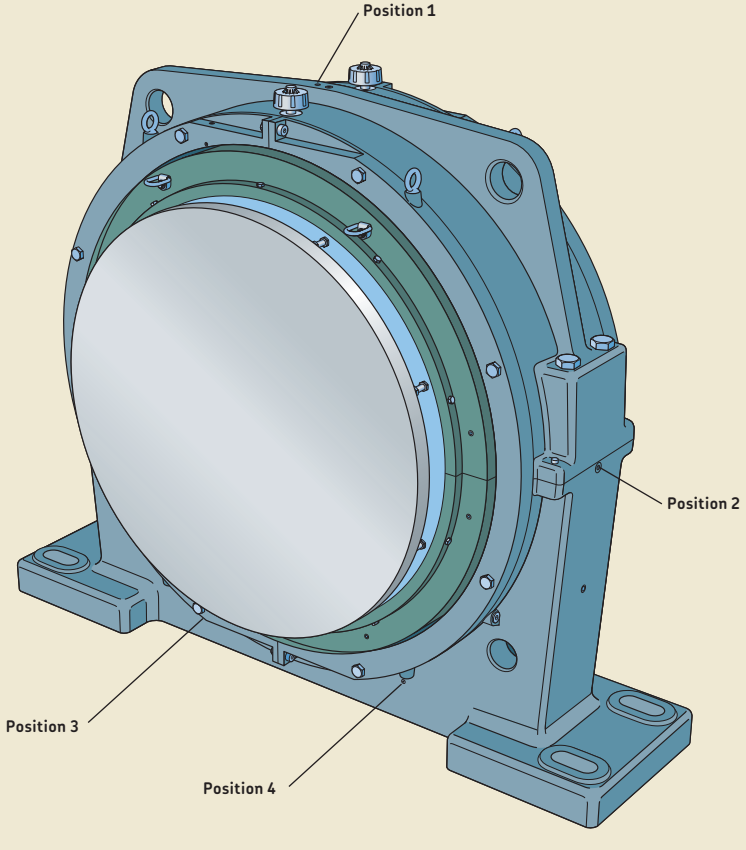

Ordering information

FSDR .. K housings are supplied with the following components:

- housing
- 2 covers, including O-rings and 8 hexagon head bolts per cover (16 in total)
- 2 labyrinth rings, including 10 hexagon head bolts per labyrinth ring (20 in total)
- 2 shaft sleeves, including O-rings
- 2 locating rings
- 2 ventilating valves
- 2 PTFE strips (for all housings except size 49/1320)

The bearings, bearing sleeves, V-ring seals, and clamping bands must be ordered separately.

Order example

A trunnion bearing housing (with metric thread connections) is required for a 239/1060 CAK/W33 spherical roller bearing. The following items should be ordered:

- 1 housing FSDR 39/1060 K
- 1 bearing 239/1060 CAK/W33
- 1 bearing sleeve KOH 39/1060
- 2 V-ring seals 1180 VRME R
- 4 clamping bands
  RM 15 Art. No. 25538099 Length 1500
- 2 clamping bands
  RM ADJUST Art. No. 25539099 Length 700

15

15.1 FSDR .. K grinding mill housings
d_a **825 – 1 460** mm

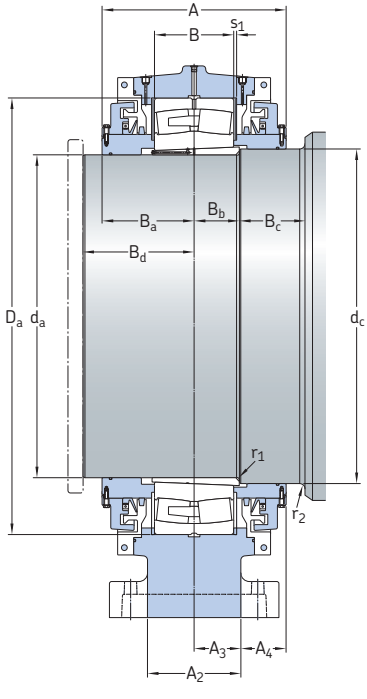

Shaft diameter d_a	**Housing** Designation	**Appropriate parts** Bearing	Unthreaded sleeve	V-ring seal	**Dimensions** Housing A	A_1	A_2	A_3	A_4
mm	–	–			mm				
825	**FSDR 39/850 K**	239/850 CAK/W33	KOH 39/850	960 VRME R[1]	510	450	235	117,5	137,5
1 030	**FSDR 39/1060 K**	239/1060 CAKF/W33	KOH 39/1060	1180 VRME R[1]	545	560	265	132,5	140
1 150	**FSDR 39/1180 K**	239/1180 CAKF/W33	KOH 39/1180	1280 VRME R[1]	632	560	285	142,5	173,5
1 280	**FSDR 49/1320 K**	249/1320 CAK30F/W33	236696-1	1425 VRME R[2]	810	800	440	220	185
1 460	**FSDR 48/1500 K**	248/1500 CAK30FA/W20	236558	1575 VRME R[1]	585	800	360	180	112,5

[1] Two seals are required for each housing.
[2] Four seals are required for each housing.

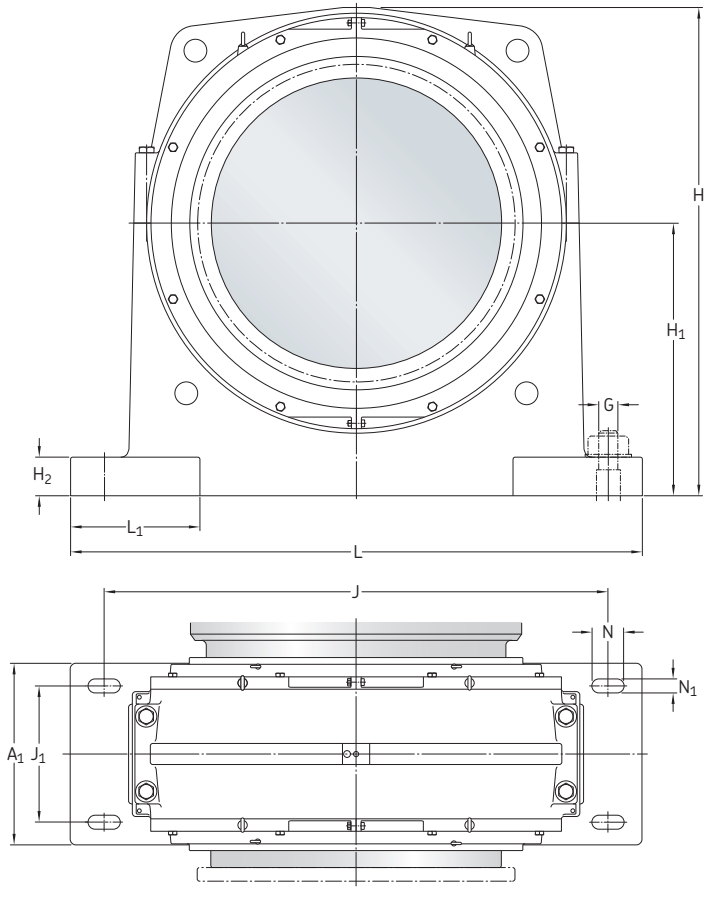

Shaft diameter	Dimensions Housing													Dimensions Shaft abutment and fillet							Mass Housing
d_a	D_a	B	H	H_1	H_2	J	J_1	L	L_1	N	N_1	s_1	G	d_c	B_a [1]	B_b [1]	B_c	B_d [1]	r_1	r_2	
mm														mm							kg
825	1 120	200	1 420	700	100	1 500	290	1 715	430	125	55	10	48	860	255	118	252	310	10	20	2 300
1 030	1 400	250	1 700	870	120	1 850	370	2 105	520	132	62	10	52	1 070	272,5	147	233	360	12	15	3 400
1 150	1 540	272	1 830	950	110	2 000	370	2 250	500	142	62	10	52	1 190	316	155	245	380	12	20	3 500
1 280	1 720	400	2 150	1 200	170	2 220	600	2 520	570	142	62	10	52	1 320	405	217	283	500	12	20	6 590
1 460	1 820	315	2 225	1 200	170	2 320	600	2 620	620	142	62	10	52	1 500	292,5	173	182	355	8	25	6 650

[1] Dimension varies depending on the drive-up of the bearing onto the sleeve.



Metric roller bearing units SYNT and FYNT series (SKF ConCentra)

Bearing types
- Spherical roller bearings

Bearing dimension series
- 222

Shaft diameter range
- 35 to 100 mm

Typical shaft-bearing combinations
- Plain shaft with SKF ConCentra sleeve

Seals
- Double-lip
- Labyrinth
- Heavy-duty

Lubrication
- Grease

Mounting
- Two-bolt mounting (plummer block housings)
- Three- or four-bolt mounting (flanged housings)

Materials
- Grey cast iron

Compliance to standards
- ISO 113 (two-bolt plummer block housings)

Supersedes
- SYT series

SKF ConCentra roller bearing units are robust, ready-to-mount units that are assembled, lubricated and sealed at the factory for maximum service life. With their simple and safe installation, easy alignment and reliable locking technology, they are an excellent alternative to sleeve-mounted bearings in split housings.

Metric roller bearing units SYNT and FYNT series (SKF ConCentra)

Designations **661**

Standard bearing unit design **662**
Concentric locking technology 663
Features and benefits 664
Housing material 665
Paint, corrosion protection 665
Dimension standards 665
Interchangeability 665

Bearing unit variants **666**

Sealing solutions **667**
Double-lip seals 667
Labyrinth seals 667
Heavy-duty radial shaft seals 667
End covers 667

Design considerations **670**
Bearing life 670
Typical shaft-bearing combinations . . . 670
Locating and non-locating bearing positions 670
Load carrying capacity 670
Radial internal clearance 673
Operating temperature 673
Operating speed 673
Shaft specifications 673
Attachment bolt recommendations 674

Lubrication **675**
Initial grease fill 675
Relubrication 675
Relubrication intervals 676
Relubrication procedure 678
Relubrication quantity 679
Greases for relubrication 679
Grease life for the relubrication-free variant 680

Mounting **682**

Condition monitoring **684**
SYNT series 684
FYNT series 684

Accessories **684**

Ordering information **685**

Product tables
16.1 SKF ConCentra roller bearing units with a plummer block housing, metric shafts 686
16.2 ConCentra roller bearing units with a flanged housing, metric shafts 688

Designations

Designation system for metric SKF ConCentra roller bearing units

SYNT 45 L W

Series

SYNT	Bearing unit with a plummer block housing
FYNT	Bearing unit with a flanged housing [1]

Size identification

...	Shaft diameter [mm]

Type of arrangement

F	Bearing unit for the locating bearing position
L	Bearing unit for the non-locating bearing position

Variant

–	General (with double-lip seals)
TS	High-speed (with labyrinth seals)
TF	Extreme environment (with heavy-duty radial shaft seals)
W	Relubrication-free (with double-lip seals)

[1] Only available in the general variant.

Designation system for end covers

ECY 211

Series

ECY	End cover for SKF ConCentra roller bearing units

Size identification

...	Last three digits of the designation of the incorporated bearing

Standard bearing unit design

SKF ConCentra roller bearing units consist of a non-split housing, an SKF spherical roller bearing on an SKF ConCentra stepped sleeve, seals and grease. Bearing units for metric shafts are available in two series, depending on the housing design. Bearing units in the SYNT series have a non-split plummer (pillow) block housing with two holes cast into the base for attachment bolts (→ **fig. 1**). Bearing units in the FYNT series have a flanged housing and are produced in two designs (→ **fig. 2**):

- For shaft diameters from 35 to 60 mm, the housings have a triangular flange and three drilled holes for attachment bolts.
- For shaft diameters from 65 to 100 mm, the housings have a square flange and four drilled holes for attachment bolts.

The bearings used in SKF ConCentra roller bearing units are upgraded SKF Explorer spherical roller bearings in the 222 series. The stepped sleeve has inclined serrations that match the profile of the bearing bore. The bearing unit also contains a mounting collar, washer, back-up collar and wave spring. The mounting collar is equipped with grub (set) screws that are positioned at an angle (not horizontal) to facilitate mounting and dismounting (→ **fig. 3**).

Fig. 1

SYNT series

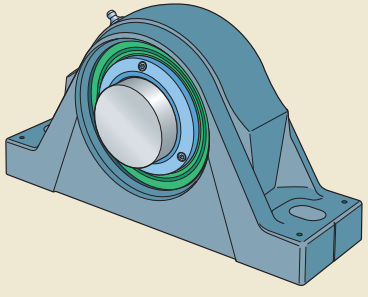

Fig. 2

FYNT series

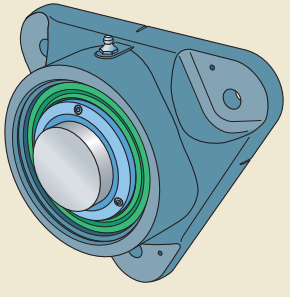

Shaft diameters from 35 to 60 mm

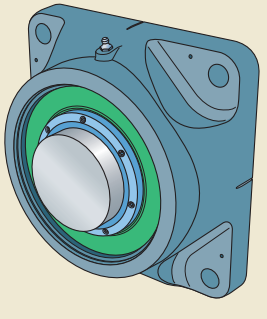

Shaft diameters from 65 to 100 mm

Concentric locking technology

The locking concept is based on two sets of inclined planes (serrations): one set in the bearing bore, the other on the stepped sleeve. When the grub (set) screws in the mounting collar are tightened, the bearing is displaced axially, forcing the inner ring to expand. This does two things: it sets the correct internal clearance within the bearing and it exerts pressure on the stepped sleeve, forcing it to contract around the circumference of the shaft for a true concentric, tight fit (→ **fig. 4**). When the bearing is displaced axially during mounting, it also pushes against a wave spring. The wave spring, which remains preloaded, facilitates removal of the unit.

Fig. 3

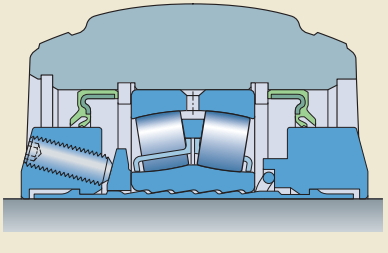

Fig. 4

SKF ConCentra locking mechanism

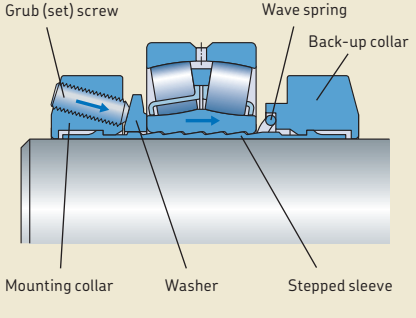

Features and benefits

SKF ConCentra roller bearing units have the following features and benefits:

Ready-to-mount

SKF ConCentra roller bearing units are assembled, greased and ready-to-mount, saving time and reducing the risk of contaminating or damaging the bearing during installation.

Simple mounting

The bearing units can be used with commercial grade shafts and are located easily on the shaft by tightening the grub (set) screws in the mounting collar. To simplify mounting and make alignment more accurate, lines indicating the centre of the bearing seat or the housing bore axis are cast into the housing base or flange. Dimples indicate the position for dowel pins (→ **fig. 5**).

Concentric locking

Torquing the grub (set) screws to the recommended value sets the internal clearance within the bearing and tightens the sleeve against the shaft. The near perfect 360° grip on the shaft virtually eliminates shaft damage and the possibility of fretting corrosion.

Easy replacement

With SKF ConCentra roller bearing units, logistics costs are reduced as there is only one part to order, store and mount.

Stiff housing

The housing base is reinforced with ribs and the area around the attachment bolt holes is strengthened to minimize the risk of cracking caused by over-tightening the attachment bolts (→ **fig. 6**).

Optimized for endurance

The upgraded SKF Explorer spherical roller bearings mounted in SKF ConCentra roller bearing units provide a very high load carrying capacity. The special roller profile prevents edge stresses from occurring and the rollers, together with the floating guide ring, keep friction and heat generation to a minimum.

Fig. 5

Cast indications mark the centre of the housing bore or bearing seat

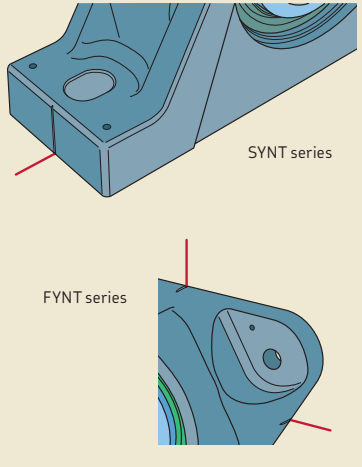

Fig. 6

Reinforcement rib in the base

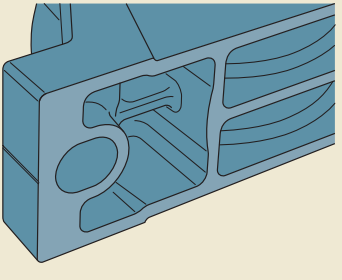

Housing material

The housings used in SKF ConCentra roller bearing units are made of grey cast iron.

Paint, corrosion protection

The housings are painted black (RAL 9005) using a water based alkyd/acryl paint. The paint protects the housing in accordance with ISO 12944-2, corrosivity category C2 (i.e. exterior atmospheres with low level of pollution, interior atmospheres where condensation may occur). The paint is not affected by most lubricating or engine oils, cutting fluids or alkalescent washing chemicals. Housings can be repainted with most water or solvent based 1- or 2-component paints.

Unpainted surfaces are protected by a solventless rust inhibitor.

Dimension standards

Boundary dimensions of SKF ConCentra roller bearing units in the SYNT series are in accordance with ISO 113. Boundary dimensions for bearing units in the FYNT series are not standardized either nationally or internationally.

Interchangeability

SKF ConCentra roller bearing units in the SYNT series are dimensionally interchangeable with SNL plummer (pillow) block housings in the 5(00) series (→ *Split plummer block housings SNL 2, 3, 5 and 6 series*, starting on **page 55**).

Bearing units in the FYNT series are dimensionally interchangeable with FNL flanged housings (→ *Flanged housings FNL series*, starting on **page 531**).

Bearing unit variants

SKF ConCentra roller bearing units are available in four variants, each optimized to accommodate certain application conditions. Bearing units in the SYNT series are available in all four variants. Bearing units in the FYNT series are only available in the general variant.

With the exception of the relubrication-free variant, SKF ConCentra roller bearing units are filled with a premium lithium grease that contains EP additives. Relubrication-free bearing units are filled with a premium semi-synthetic long-life grease.

For additional information about the sealing solution and grease used in the different variants, refer to the sections *Sealing solutions* (→ **page 667**) and *Lubrication* (→ **page 675**) respectively.

General variant

These bearing units are equipped with a double-lip seal on each side. They are suitable for normal to heavy loads ($0{,}05\ C < P \leq 0{,}15\ C$[1]) in contaminated environments, e.g. textile machines.

High-speed variant

These bearing units are equipped with a labyrinth seal on each side. They are suitable for normal to heavy loads ($0{,}05\ C < P \leq 0{,}15\ C$[1]) in relatively clean to normal environments, e.g. industrial fans and blowers.

Bearing units in the high-speed variant are identified by the designation suffix TS.

Extreme environment variant

These bearing units are equipped with a heavy-duty radial shaft seal on each side. They are suitable for normal to heavy loads ($0{,}05\ C < P \leq 0{,}15\ C$[1]) in extremely contaminated environments, e.g. outdoor conveyors.

Bearing units in the extreme environment variant are identified by the designation suffix TF.

Relubrication-free variant

These bearing units are equipped with a double-lip seal on each side. They are suitable for light loads ($P \leq 0{,}05\ C$[1]) in relatively clean environments, e.g. industrial air handling units.

Bearing units in the relubrication-free variant are identified by the designation suffix W.

[1] The basic dynamic load rating C is provided in the product tables. To calculate the equivalent dynamic bearing load P, refer to **page 678**.

Sealing solutions

SKF ConCentra roller bearing units in the SYNT series are available with different sealing solutions (→ **fig. 7**):

- double-lip seals
- labyrinth seals
- heavy-duty radial shaft seals
- end covers

Bearing units in the FYNT series are produced standard with double-lip seals. End covers are also available, but must be ordered separately.

Table 1, **page 668** provides an overview of the characteristics and suitability of each sealing solution. Details are provided in the following text. This information should be used as a guideline, and does not substitute for testing a seal in its application.

Double-lip seals

Double-lip seals are made of acrylonitrile-butadiene rubber (NBR) that is vulcanized onto a stamped steel insert. The steel insert enables the outside surface of the seal to sit firmly in the housing bore, providing a static seal. The seal has an auxiliary lip to protect against coarse contaminants.

Labyrinth seals

As labyrinth seals do not generate friction, bearing units fitted with these seals are capable of relatively high speed operation. The labyrinth is created with three sheet steel rings. Two rings are fixed to the mounting collar / back-up collar. Both rotate with the shaft to act as flingers. The third ring is secured in the housing bore.

Heavy-duty radial shaft seals

Heavy-duty radial shaft seals with an auxiliary lip provide superior protection against contaminants. These rugged and robust seals have a steel insert that is encased in acrylonitrile-butadiene rubber (NBR). The primary seal lip can maintain its sealing ability even if there is excessive wear. An auxiliary dust lip provides added protection against coarse contaminants.

End covers

Bearing units mounted at the end of a shaft should have an end cover. These are made of plastic and can be snapped easily into the recess of the housing bore.

Details of the permissible length of the shaft end are provided in **table 2** on **page 669**.

Fig. 7

Seals for SKF ConCentra roller bearing units

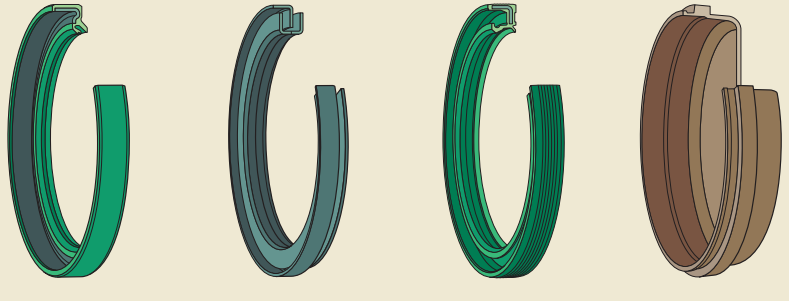

Double-lip seal | Labyrinth seal | Heavy-duty radial shaft seal | End cover

Table 1

Seals for SKF ConCentra roller bearing units

Seal				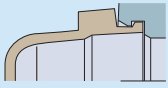
Type	double-lip	labyrinth	heavy-duty radial shaft seal	end cover
Variant	general and relubrication-free	high-speed	extreme environment	all
Housing series	SYNT FYNT – general variant only	SYNT	SYNT	SYNT and FYNT
Material	nitrile rubber, steel	steel	nitrile rubber, steel	polypropylene
Application conditions and requirements				
Temperature [°C]	–20 to 110[1]	–20 to 110[1]	–20 to 110[1]	–20 to 110[1]
Temperature [°F]	–5 to 230[1]	–5 to 230[1]	–5 to 230[1]	–5 to 230[1]
Max. circumferential speed[2] [m/s]	13	not limited	6	n/a
Max. misalignment [°]	1,5	1,5	1,5	n/a
Low friction	+	++	+	n/a
Axial shaft displacement	++	–	+	n/a
Vertical shaft arrangement	+	+	+	+
Sealing suitability				
Dust	++	–	++	++
Fine particles	++	–	++	++
Coarse particles	++	+	++	++
Chips	+	++	++	++
Liquids when sprayed	+	––	++	++
Direct sunlight	+	++	+	++

Symbol:
- n/a not applicable
- ++ very suitable
- + suitable
- – limited suitability
- –– unsuitable

[1] Imposed by the grease.
[2] To convert circumferential speeds to rotational speeds, refer to **table 7** on **page 37**.

Table 2

Permissible length of the shaft end

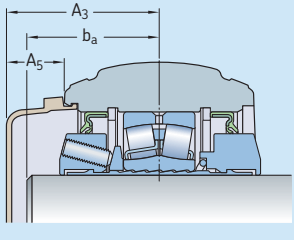

SYNT series

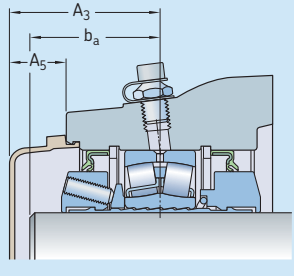

FYNT series

Bearing unit Size		Dimensions b_a min.	max.	A_3	A_5
–		mm			
SYNT 35	**FYNT 35**	34	43	50	22
SYNT 40	**FYNT 40**	34	43	51	23,5
SYNT 45	**FYNT 45**	34	43	52	23
SYNT 50	**FYNT 50**	34	55	62	29,5
SYNT 55	**FYNT 55**	34	55	66	34
SYNT 60	**FYNT 60**	38	65	73	35,5
SYNT 65	**FYNT 65**	38	65	73	35,5
SYNT 70	**FYNT 70**	38	70	80	38,5
SYNT 75	**FYNT 75**	38	70	80	38,5

Design considerations

For general information about system design, refer to the following sections:

- *Typical shaft-bearing combinations* (→ **page 41**)
- *Locating/non-locating bearing arrangements* (→ **page 40**)
- *Load carrying capacity* (→ **page 44**)
- *Specifications for shafts and housing support surfaces* (→ **page 45**)

Bearing life

For information about the SKF rating life, minimum load and static safety for bearings in SKF ConCentra roller bearing units, refer to the product information available online at skf.com/bearings. The bearing designations and load carrying capacities are provided in the product tables, starting on **page 686**.

Typical shaft-bearing combinations

SKF ConCentra roller bearing units accommodate bearings on an SKF ConCentra stepped sleeve (with inclined serrations) on plain shafts.

Locating and non-locating bearing positions

SKF ConCentra roller bearing units can be used for both the locating and non-locating bearing positions. Bearing units for the non-locating bearing position have a wide bearing seat to accommodate 2,5 mm of axial displacement, in either direction, from the central position (→ **fig. 8**). Units for the non-locating bearing position are identified by the designation suffix L.

Bearing units for the locating bearing position are identified by the designation suffix F.

Load carrying capacity

SKF ConCentra roller bearing units are intended for loads acting perpendicularly toward the support surface. If the bearing unit is supported over its entire base and the loads are purely perpendicular, loads are limited only by the bearing. If loads acting in other directions occur, or if the bearing unit is not supported over its entire base, be sure that the magnitude of the load is permissible for the housing and the attachment bolts. If heavy loads, not acting perpendicularly toward the support surface, are expected, additional supports are recommended to relieve the attachment bolts of the load.

Breaking loads and safety factors

Guideline values for the breaking loads of housings in the SYNT series are listed in **table 3**. Guideline values for the breaking loads of housings in the FYNT series are listed in **table 4**, **page 672**. To obtain the permissible load for a housing, the appropriate breaking load should be divided by a factor based on the safety requirements. In general engineering, a safety factor of 6 is typical (→ *Load carrying capacity*, **page 44**).

Fig. 8

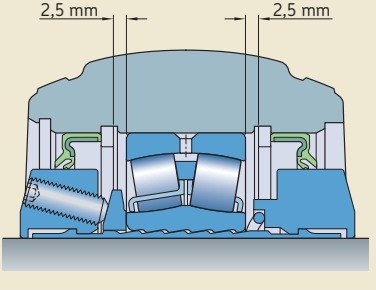

Table 3

Breaking loads for housings of SKF ConCentra roller bearing units in the SYNT series

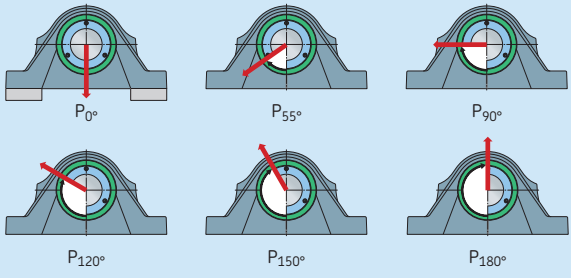

Bearing unit Size	Breaking load in the direction of $P_{0°}$[1]	$P_{55°}$	$P_{90°}$	$P_{120°}$	$P_{150°}$	$P_{180°}$
–	kN					
SYNT 35	150	250	150	95	85	105
SYNT 40	160	265	160	100	90	110
SYNT 45	170	280	170	110	100	115
SYNT 50	190	330	200	130	115	140
SYNT 55	210	350	210	140	120	150
SYNT 60	270	365	220	150	130	170
SYNT 65	290	380	230	155	140	210
SYNT 70	350	400	240	160	145	215
SYNT 75	370	415	250	165	150	220
SYNT 80	430	480	290	205	190	240
SYNT 90	470	620	370	280	250	310
SYNT 100	600	680	410	310	275	340

[1] The values for $P_{0°}$ are valid when the housing is not fully supported across its base.

Axial holding power

The axial holding power of an SKF ConCentra roller bearing unit depends on the friction between the shaft and stepped sleeve. It is therefore also dependent on the number of grub (set) screws in the mounting collar (→ **table 5**).

When mounted correctly, the bearing units can withstand typical shock loads equivalent to the requisite axial holding force. However, the maximum operating axial load is limited by the rated bearing life through the equivalent bearing load P (→ **page 678**).

Table 5

Axial holding power of SKF ConCentra roller bearing units

Bearing unit Size		No. of grub (set) screws	Axial holding power [1]
–		–	kN
SYNT 35	**FYNT 35**	3	15
SYNT 40	**FYNT 40**	3	15
SYNT 45	**FYNT 45**	3	15
SYNT 50	**FYNT 50**	3	15
SYNT 55	**FYNT 55**	3	15
SYNT 60	**FYNT 60**	3	15
SYNT 65	**FYNT 65**	4	20
SYNT 70	**FYNT 70**	4	20
SYNT 75	**FYNT 75**	5	25
SYNT 80	**FYNT 80**	5	25
SYNT 90	**FYNT 90**	7	35
SYNT 100	**FYNT 100**	7	35

[1] Not eqivalent to the axial load carrying capacity of the bearing unit

Table 4

Breaking loads for housings of SKF ConCentra roller bearing units in the FYNT series

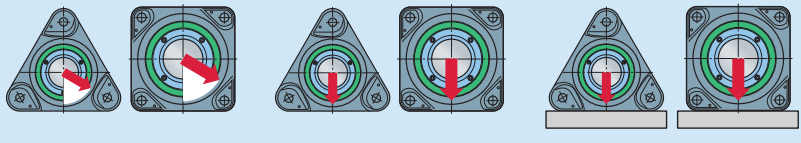

P_1 P_2 P_3

Bearing unit Size	Breaking load in the direction of P_1	P_2	P_3
–	kN		
FYNT 35	80	55	95
FYNT 40	90	60	100
FYNT 45	100	65	105
FYNT 50	110	80	110
FYNT 55	120	95	115
FYNT 60	130	110	190
FYNT 65	140	125	265
FYNT 70	150	140	340
FYNT 75	160	155	415
FYNT 80	170	170	490
FYNT 90	180	185	565
FYNT 100	190	200	640

Additional housing support for bearing units in the SYNT series

When the housing is subjected to loads acting parallel to the support surface, it may be necessary to pin the housing to the support surface or to provide a stop to counter the load.

In cases where the resultant radial load is between 55° and 120° or when the axial load is greater than 5% of $P_{180°}$ (→ **table 3**, **page 671**), the bearing unit should be pinned to its support surface. The dowel pins should be sufficiently strong to accommodate the loads acting parallel to the support surface.

Recommendations for the position and size of the holes to accommodate dowel pins are provided in **table 12** on **page 683**.

Radial internal clearance

The upgraded SKF Explorer spherical roller bearings in SKF ConCentra roller bearing units are manufactured standard with C3 radial internal clearance. The clearance values, in accordance with ISO 5753-1, are provided in **table 6** and are valid for unmounted bearings under zero measuring load.

Operating temperature

The permissible operating temperature of SKF ConCentra roller bearing units is limited by the lubricant (→ **table 8**, **page 675**). For relubrication-free units, refer to the section *Grease life for the relubrication-free variant* on **page 680**.

The housing material does not have any additional temperature limits, except for very low temperature applications where impact strength could be a factor.

The housing paint is heat resistant up to 80 °C *(175 °F)* material temperature or 100 °C *(210 °F)* ambient temperature.

Operating speed

The speeds at which SKF ConCentra roller bearing units can be operated depend on the sealing solution in the bearing unit. For bearing units fitted with double-lip or heavy-duty radial shaft seals, the limiting speeds are based on the permissible circumferential speed at the seal lips. For those fitted with labyrinth seals, the limiting speeds are imposed by the bearing size and the grease.

Guideline values for the limiting speeds are listed in the product tables.

Shaft specifications

SKF ConCentra roller bearing units can be used with commercial grade shafts that meet the h9Ⓔ tolerance class for dimensional accuracy and an IT5/2 tolerance for cylindricity, in accordance with ISO 1101.

Table 6

Radial internal clearance of bearings in SKF ConCentra roller bearing unit.

Bore diameter d		Radial internal clearance	
over	incl.	min.	max.
mm		µm	
30	**40**	50	65
40	**50**	60	80
50	**65**	75	95
65	**80**	95	120
80	**100**	110	140

Attachment bolt recommendations

In typical applications, 8.8 class hexagon head bolts in accordance with ISO 4014 can be used together with washers. If the load does not act perpendicularly toward the base or is particularly heavy, it may be necessary to use stronger, 10.9 class bolts.

SKF housings can withstand loads resulting from tightening the attachment bolts to the torque values recommended by bolt manufacturers (→ **table 7**). They are valid for oiled, but otherwise untreated, thread surfaces.

SKF cannot guarantee that tightening to the recommended value will provide sufficient anchoring. Make sure that attachment bolts, dowels or stops, and a sufficiently strong support can accommodate all occurring loads.

Table 7

Torque values for attachment bolts

Bearing unit Size	**Attachment bolts** Size	Tightening torque[1]
–	–	Nm
SYNT 35	M 12	80
SYNT 40	M 12	80
SYNT 45	M 12	80
SYNT 50	M 16	200
SYNT 55	M 16	200
SYNT 60	M 16	200
SYNT 65	M 16	200
SYNT 70	M 20	385
SYNT 75	M 20	385
SYNT 80	M 20	385
SYNT 90	M 24	665
SYNT 100	M 24	665
FYNT 35	M 12	80
FYNT 40	M 12	80
FYNT 45	M 12	80
FYNT 50	M 12	80
FYNT 55	M 12	80
FYNT 60	M 12	80
FYNT 65	M 16	200
FYNT 70	M 16	200
FYNT 75	M 16	200
FYNT 80	M 16	200
FYNT 90	M 20	385
FYNT 100	M 20	385

[1] Recommended by bolt manufacturers.

Lubrication

SKF ConCentra roller bearing units are intended for grease lubrication.

Initial grease fill

SKF ConCentra roller bearing units in the general, high-speed and extreme environment variants are filled with a mineral oil based lithium grease. The initial grease fill at the factory fills the bearing completely, and 30 to 50% of the free space in the housing.

Relubrication-free bearing units are filled with a semi-synthetic oil based lithium grease. The initial grease fill at the factory fills the bearing completely, and 60 to 80% of the free space in the housing.

The technical specifications of both greases are provided in **table 8**.

For general, high-speed and extreme variants, the grease provides reliable performance when operating between 35 and 110 °C. During start-up, temperatures down to –20 °C are permissible. For short periods, temperatures above 110 °C can be tolerated.

For the relubrication-free variant, the grease provides reliable performance when operating between 35 and 130 °C. During start-up, temperatures down to –30 °C are permissible. For short periods, temperatures above 130 °C can be tolerated.

For additional information about permissible temperatures of rolling bearing greases (the SKF traffic light concept), refer to the information available online at skf.com/bearings.

Relubrication

SKF ConCentra roller bearing units are typically relubricated in order to realize maximum service life. All bearing units have a lubrication hole with a 1/8-27 NPSF thread. They are provided standard with a grease fitting AH 1/8-27 PTF, except for the relubrication-free variant, which has the lubrication hole plugged.

Table 8

Technical specifications for the greases in SKF ConCentra roller bearing units

Housing variant	Temperature range	Thickener	Base oil type	NLGI consistency class	Base oil viscosity [mm²/s] at 40 °C *(105 °F)*	at 100 °C *(210 °F)*
General, high-speed and extreme temperature	–20 to 110 °C *(–5 to 230 °F)*	Lithium soap	Mineral	2	200	13
Relubrication-free	–30 to 130 °C *(–20 to 250 °F)*	Lithium soap	Semi-synthetic	2–3	41,9	7,5

Relubrication intervals

The relubrication interval t_f for SKF ConCentra roller bearing units excluding the relubrication-free variant can be obtained from **diagrams 1** to **3** as a function of:

- the operating temperature
- the rotational speed n [r/min]
- the bearing mean diameter d_m [mm] (→ **table 9**, **page 678**)
- the bearing factor b_f (→ **table 9**, **page 678**, for values of e)
  - $b_f = 2$ when $F_a/F_r \leq e$
  - $b_f = 6$ when $F_a/F_r > e$
- the load ratio
  - $P \leq 0{,}05\ C$ (→ **diagram 1**)
  - $P = 0{,}1\ C$ (→ **diagram 2**)
  - $P = 0{,}15\ C$ (→ **diagram 3**)

Diagram 1

Relubrication interval t_f for roller bearing units, for $P \leq 0{,}05\ C$

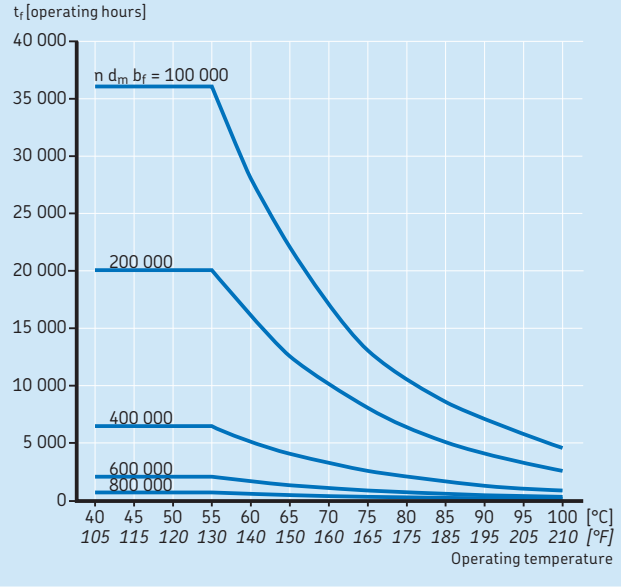

Diagram 2

Relubrication interval t_f for roller bearing units, for P = 0,1 C

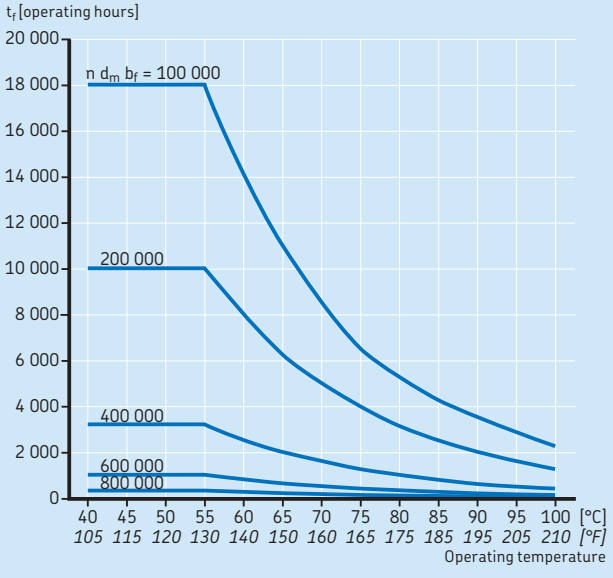

Diagram 3

Relubrication interval t_f for roller bearing units, for P = 0,15 C

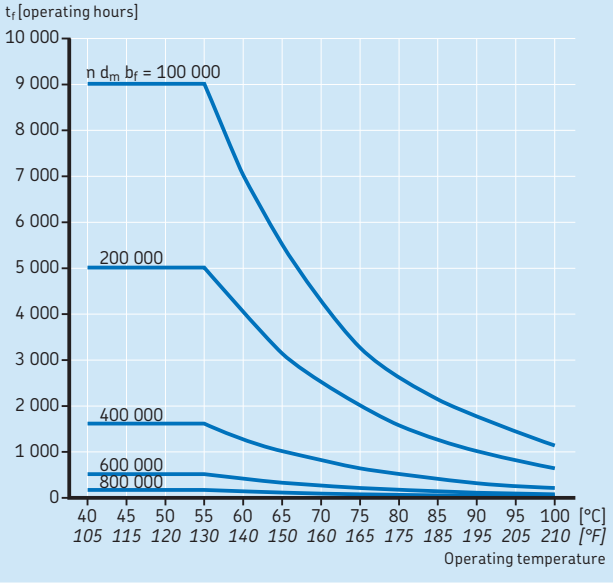

The basic dynamic load rating C is provided in the product tables. The equivalent dynamic bearing load P can be obtained from

$P = F_r + Y_1 F_a$ when $F_a/F_r \leq e$
$P = 0{,}67F_r + Y_2 F$ when $F_a/F_r > e$

where
P = equivalent dynamic bearing load [kN]
F_r = radial component of the bearing load [kN]
F_a = axial component of the bearing load [kN]
Y_1,Y_2 = axial load calculation factors for the bearing (→ **table 9**)
e = limiting value for F_a/F_r (→ **table 9**)

The calculated relubrication intervals represent the grease life L_1, which relates to the time period at the end of which 99% of the bearing units are still reliably lubricated. The intervals are estimated values, applicable for bearing units mounted on horizontal shafts in a relatively clean environment. When operating conditions differ, the relubrication intervals should be adjusted as follows:

- For a vertical shaft, the interval should be halved.
- For outer ring rotation or rotating load, the interval should be halved.
- For contaminated environments, the following reduction factors should be used:
  – 0,5 for moderate contamination
  – 0,3 for severe contamination
  – 0,1 for very severe contamination

Relubrication procedure

Before relubricating, the grease fitting and the area surrounding it should be cleaned. High-pressure cleaning equipment should be avoided. During relubrication, grease should be introduced via the grease fitting (→ **fig. 9**) while the shaft is rotating slowly. Excessive pressure and over-greasing should be avoided, otherwise the seals may be damaged.

Table 9

Bearing mean diameter and calculation factors for SKF ConCentra roller bearing units

Bearing unit		Bearing mean diameter	Calculation factors		
Size		d_m	e	Y_1	Y_2
–		mm	–		
SYNT 35	**FYNT 35**	53,5	0,31	2,2	3,3
SYNT 40	**FYNT 40**	60	0,28	2,4	3,6
SYNT 45	**FYNT 45**	65	0,26	2,6	3,9
SYNT 50	**FYNT 50**	70	0,24	2,8	4,2
SYNT 55	**FYNT 55**	77,5	0,24	2,8	4,2
SYNT 60	**FYNT 60**	85	0,24	2,8	4,2
SYNT 65	**FYNT 65**	92,5	0,24	2,8	4,2
SYNT 70	**FYNT 70**	97,5	0,22	3,0	4,6
SYNT 75	**FYNT 75**	102,5	0,22	3,0	4,6
SYNT 80	**FYNT 80**	110	0,22	3,0	4,6
SYNT 90	**FYNT 90**	125	0,24	2,8	4,2
SYNT 100	**FYNT 100**	140	0,24	2,8	4,2

Fig. 9

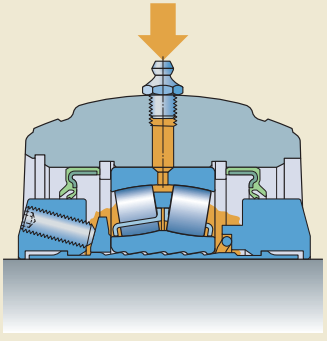

Relubrication quantity

The appropriate quantity of grease for relubrication of SKF ConCentra roller bearing units is provided in **table 10**.

Greases for relubrication

To relubricate SKF ConCentra roller bearing units, SKF recommends using SKF LGEP 2 grease, which is fully compatible with the original grease introduced at the factory. Other compatible greases such as SKF's multipurpose LGMT 2 and LGMT 3 greases can also be used.

Table 10

Grease quantities for relubrication of SKF ConCentra roller bearing units

Bearing unit Size		Grease quantity
–		g
SYNT 35	**FYNT 35**	3
SYNT 40	**FYNT 40**	4
SYNT 45	**FYNT 45**	4
SYNT 50	**FYNT 50**	4
SYNT 55	**FYNT 55**	5
SYNT 60	**FYNT 60**	6
SYNT 65	**FYNT 65**	7
SYNT 70	**FYNT 70**	8
SYNT 75	**FYNT 75**	8
SYNT 80	**FYNT 80**	9
SYNT 90	**FYNT 90**	13
SYNT 100	**FYNT 100**	17

Grease life for the relubrication-free variant

The grease used in relubrication-free bearing units can adequately lubricate the bearing throughout its service life provided the bearing unit is suitable for the operating conditions. The relationship between operating conditions and grease service life is shown in **diagram 4** and is a function of:

- the operating temperature [°C]
- the speed factor $A = n\ d_m$

where
A = speed factor [mm/min]
n = rotational speed [r/min]
d_m = bearing mean diameter [mm]
(→ **table 9**, **page 678**)

Provided the operating range of the bearing unit falls within the shaded area of **diagram 4**, the bearing unit can attain a grease life of L_{50h} = 100 000 hours or more. L_{50h} is the time period at the end of which 50% of the units are still reliably lubricated.

Calculation example

An SKF ConCentra roller bearing unit with a plummer block housing is required for an industrial air handling unit. The following application information is known:

- required grease life L_{50h} = 100 000 hours
- equivalent dynamic bearing load P = 7 kN
- rotational speed n = 1 800 r/min
- shaft diameter d_a = 60 mm
- environmental conditions: relatively clean
- expected operating temperature: 55 °C

Based on the shaft diameter provided and the plummer block housing requirement, the SYNT 60 bearing unit is selected. As the application is an industrial air handling unit in a relatively clean environment, the relubrication-free variant would be a suitable choice.

From the product table, the basic dynamic load rating C = 156 kN and

when C/P = 156/7 = 22,3

then P = 0,045 C

Therefore, the bearing unit meets the conditions of use for relubrication-free variants, where P ≤ 0,05 C.

For d_m = 85 mm (→ **table 9**, **page 678**)
$A = n\ d_m = 1\ 800 \times 85 = 153\ 000$ mm/min

Using **diagram 4**, the intersection point of the calculated speed factor and expected operating temperature of 55 °C is located in the shaded area.

The SYNT 60 FW (or SYNT 60 LW) bearing unit meets the grease life requirement and is therefore suitable for the application.

Diagram 4

Temperature-speed relationship for relubrication-free SKF ConCentra roller bearing units

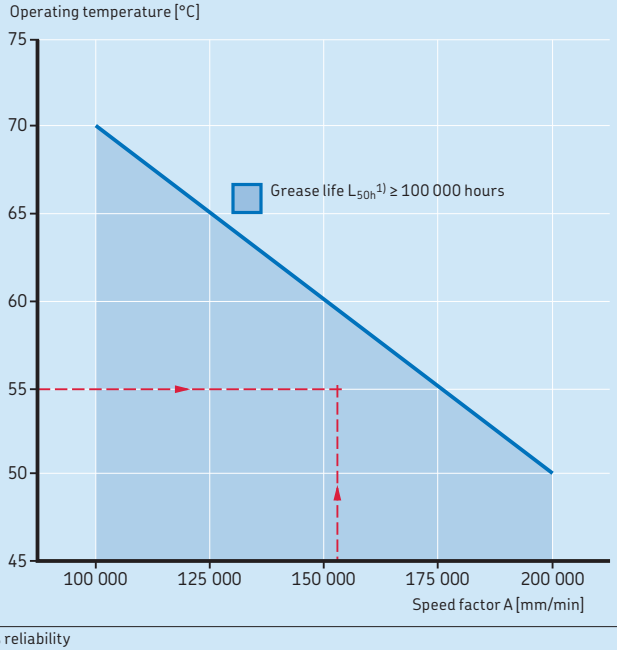

1) Grease life at 50% reliability

Mounting

SKF ConCentra roller bearing units must be mounted properly using the appropriate tools and state of the art mechanical mounting methods. All the associated components must also meet certain basic requirements (→ *Specifications for shafts and housing support surfaces* on **page 45**).

The mounting collar of bearing units in the SYNT and FYNT series is equipped with M6 grub (set) screws, the number of which depends on the size of the bearing unit. SKF recommends using a torque wrench to tighten these grub (set) screws. The tightening torque is 8 Nm.

CAUTION: Do not tighten the grub (set) screws until the bearing unit is positioned on the shaft. If the screws are tightened prematurely, the stepped sleeve may deform.

Table 11

Position and size of dowel pin holes for SKF ConCentra roller bearing units in the FYNT series

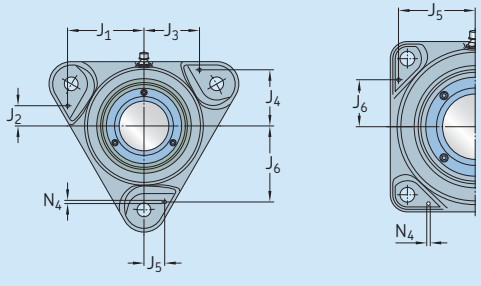

Bearing unit Size	Dimensions J_1	J_2	J_3	J_4	J_5	J_6	N_4 max.
–	mm						
FYNT 35	65	17	48	38,5	16	66	6
FYNT 40	71	20	53	43	18	72	6
FYNT 45	71	20	53	45,5	18	72	6
FYNT 50	77	21	57	49	21	77	6
FYNT 55	84	22	62	54,5	22	84	8
FYNT 60	90	24	66	59,5	24	90	8
FYNT 65	–	–	–	–	85	55	8
FYNT 70	–	–	–	–	87	54	8
FYNT 75	–	–	–	–	93	63	8
FYNT 80	–	–	–	–	95	60	8
FYNT 90	–	–	–	–	112	72	8
FYNT 100	–	–	–	–	122	78	8

Attaching bearing units in the FYNT series to a machine wall

Bearing units in the FYNT series are produced standard with a machined recess, which can be used to centre the housing on a shoulder. With this arrangement, the attachment bolts are not subjected to shear forces. The shoulder can be provided either by machining the wall or by attaching a guide ring to the wall. The dimensions of the recess D_a, are provided in **product table 16.2** on **page 688**.

Dowel pins can also be used where necessary. Recommendations for the position and size of the holes to accommodate dowel pins are provided in **table 11**.

Pinning or supporting bearing units in the SYNT series

Some load conditions may require the housing to be pinned to its support surface or to provide a stop to accommodate loads acting parallel to the support surface (→ *Additional housing support for bearing units in the SYNT series* on **page 673**). Recommendations for the position and size of the holes to accommodate dowel pins are provided in **table 12**.

Table 12

Position and size of dowel pin holes for SKF ConCentra roller bearing units in the SYNT series

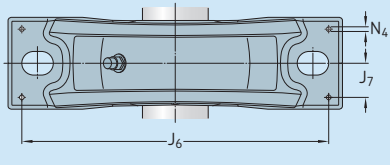

Bearing unit Size	Dimensions J_6	J_7	N_4 max.
–	mm		
SYNT 35	185	21	6
SYNT 40	185	21	6
SYNT 45	185	21	6
SYNT 50	234	26	8
SYNT 55	234	26	8
SYNT 60	254	29	8
SYNT 65	254	29	8
SYNT 70	290	32,5	8
SYNT 75	292	32,5	8
SYNT 80	320	37,5	8
SYNT 90	355	40	8
SYNT 100	385	45	8

Condition monitoring

SYNT series

SKF ConCentra roller bearing units in the SYNT series are prepared for condition monitoring as they have three flat surfaces cast into the housing (→ **fig. 10**).

Positions 1 and **3** are perpendicular to the shaft, and should be used when the unit is hung from its support or when the load acts away from or toward the support surface.

Position 2 is a measurement point parallel to the shaft and should be used when axial loads occur.

FYNT series

Accelerometers with magnets that can accommodate rounded surfaces can be attached to bearing units in the FYNT series (→ **fig. 11**).

Position 1 (360° surface area) is perpendicular to the shaft, and should be used when the load acts away from or toward the support surface.

Position 2 (360° surface area) is parallel to the shaft and should be used when axial loads occur.

Accessories

The following accessories are available for SKF ConCentra roller bearing units:

- Adapter for G 1/4 connections: LAPN 1/8
- Automatic lubricator: SKF SYSTEM 24
- Grease meter: LAGM 1000E
- Condition monitoring sensors

For additional information, refer to *SKF tools and products* (→ **page 47**).

Fig. 10

Measurement points for condition monitoring

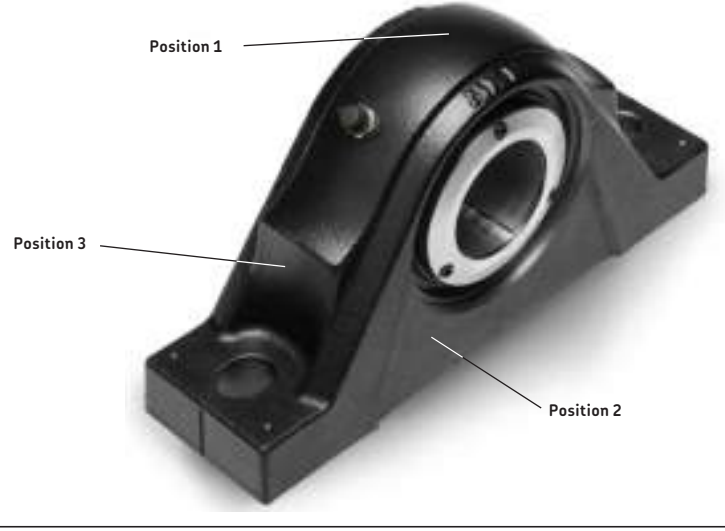

Ordering information

SKF ConCentra roller bearing units are supplied assembled, greased and ready-to-mount. End covers must be ordered separately.

Order example

Two SKF ConCentra roller bearing units with a plummer block housing are required for a 50 mm shaft diameter. One bearing unit will accommodate the bearing in the non-locating position at the end of the shaft. The other bearing unit will accommodate the bearing in the locating position and a through shaft. The bearing units should be relubrication-free.

The following items should be ordered:

- 1 bearing unit SYNT 50 FW
- 1 bearing unit SYNT 50 LW
- 1 end cover ECY 210

Fig. 11

Measurement points for condition monitoring



16.1 SKF ConCentra roller bearing units with a plummer block housing, metric shafts
d_a 35 – 100 mm

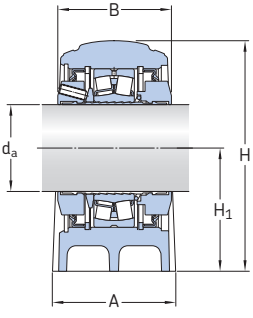

General variant

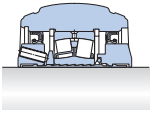

Extreme environment variant
Designation suffix TF

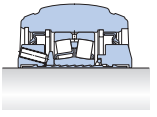

Relubrication-free variant
Designation suffix W

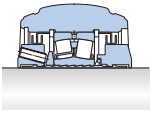

High-speed variant
Designation suffix TS

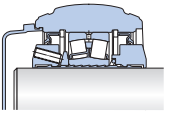

End cover

Shaft diameter d_a	Bearing unit Designation[1] Locating	Non-locating	Bearing Designation	Basic load ratings dynamic C	static C_0	Fatigue load limit P_u	End cover Designation
mm	–		–	kN		kN	–
35	**SYNT 35 F**	**SYNT 35 L**	22207 E	86,5	85	9,3	ECY 207
40	**SYNT 40 F**	**SYNT 40 L**	22208 E	96,5	90	9,8	ECY 208
45	**SYNT 45 F**	**SYNT 45 L**	22209 E	102	98	10,8	ECY 209
50	**SYNT 50 F**	**SYNT 50 L**	22210 E	104	108	11,8	ECY 210
55	**SYNT 55 F**	**SYNT 55 L**	22211 E	125	137	13,7	ECY 211
60	**SYNT 60 F**	**SYNT 60 L**	22212 E	156	166	18,6	ECY 212
65	**SYNT 65 F**	**SYNT 65 L**	22213 E	193	216	24	ECY 213
70	**SYNT 70 F**	**SYNT 70 L**	22214 E	208	228	25,5	ECY 214
75	**SYNT 75 F**	**SYNT 75 L**	22215 E	212	240	26,5	ECY 215
80	**SYNT 80 F**	**SYNT 80 L**	22216 E	236	270	29	–
90	**SYNT 90 F**	**SYNT 90 L**	22218 E	325	375	39	–
100	**SYNT 100 F**	**SYNT 100 L**	22220 E	425	490	49	–

[1] General variant. (For other variants, the appropriate designation suffix should be added.)
[2] Also refer to **diagram 4** on **page 681**.

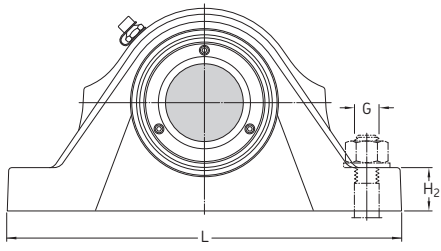

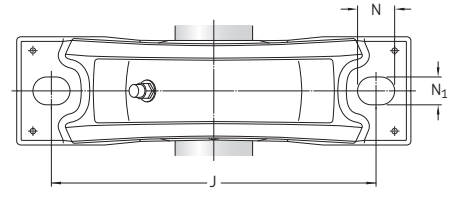

Shaft diameter	**Limiting speeds of unit variants**				**Dimensions** Bearing unit										**Mass** Unit
	General	High-speed	Extreme environment	Relubrication-free[2]											
d_a					A	B	H	H_1	H_2	J	L	N	N_1	G	
mm	r/min				mm										kg
35	4 100	6 500	2 050	4 100	60	65	111	60	25	170	205	20	15	12	3,8
40	3 800	5 900	1 900	3 800	60	65	114	60	25	170	205	20	15	12	3,8
45	3 500	5 400	1 750	3 500	60	65	118	60	25	170	205	20	15	12	4
50	3 300	4 900	1 650	3 300	70	65	131	70	28	210	255	24	18	16	5,8
55	3 100	4 500	1 550	3 100	70	66	137	70	30	210	255	24	18	16	6
60	2 900	4 100	1 450	2 900	80	71	151	80	30	230	275	24	18	16	7,7
65	2 700	3 800	1 350	2 700	80	72	158	80	30	230	280	24	18	16	8,7
70	2 600	3 600	1 300	2 600	90	72	176	95	32	260	315	28	22	20	11
75	2 500	3 300	1 250	2 500	90	72	180	95	32	260	320	28	22	20	12
80	2 300	3 100	1 150	2 300	100	72	191	100	35	290	345	28	22	20	20
90	2 100	2 800	1 050	2 100	110	86	216	112	40	320	380	32	26	24	21
100	2 000	2 500	1 000	2 000	120	86	238	125	45	350	410	32	26	24	26

16.2 SKF ConCentra roller bearing units with a flanged housing, metric shafts
d_a **35 – 100** mm

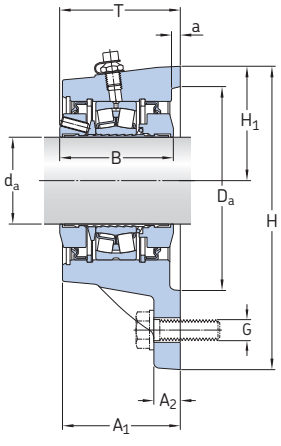

Housing design for shaft diameters 35 to 60 mm

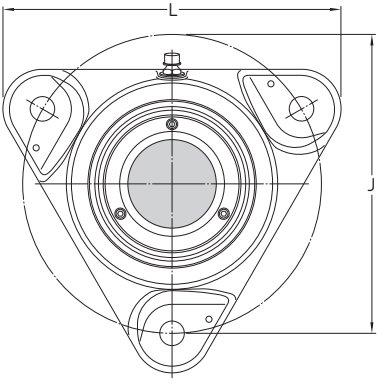

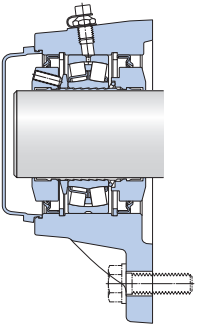

End cover

Shaft diameter d_a	**Bearing unit** Designation Locating	Non-locating	**Bearing** Designation	**Basic load ratings** dynamic C	static C_0	**Fatigue load limit** P_u	**Limiting speed**	**End cover** Designation
mm	–		–	kN		kN	r/min	–
35	**FYNT 35 F**	**FYNT 35 L**	22207 E	86,5	85	9,3	4 100	ECY 207
40	**FYNT 40 F**	**FYNT 40 L**	22208 E	96,5	90	9,8	3 800	ECY 208
45	**FYNT 45 F**	**FYNT 45 L**	22209 E	102	98	10,8	3 500	ECY 209
50	**FYNT 50 F**	**FYNT 50 L**	22210 E	104	108	11,8	3 300	ECY 210
55	**FYNT 55 F**	**FYNT 55 L**	22211 E	125	137	13,7	3 100	ECY 211
60	**FYNT 60 F**	**FYNT 60 L**	22212 E	156	166	18,6	2 900	ECY 212
65	**FYNT 65 F**	**FYNT 65 L**	22213 E	193	216	24	2 700	ECY 213
70	**FYNT 70 F**	**FYNT 70 L**	22214 E	208	228	25,5	2 600	ECY 214
75	**FYNT 75 F**	**FYNT 75 L**	22215 E	212	240	26,5	2 500	ECY 215
80	**FYNT 80 F**	**FYNT 80 L**	22216 E	236	270	29	2 300	–
90	**FYNT 90 F**	**FYNT 90 L**	22218 E	325	375	39	2 100	–
100	**FYNT 100 F**	**FYNT 100 L**	22220 E	425	490	49	2 000	–

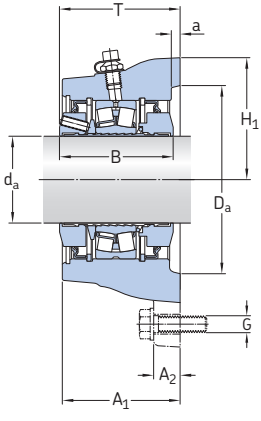

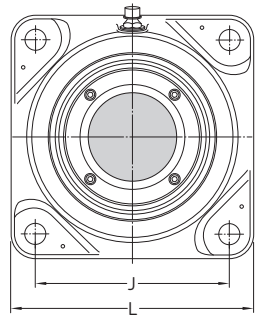

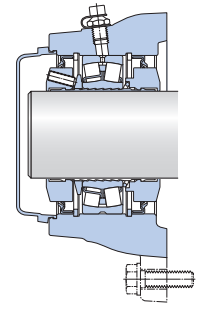

Housing design for shaft diameters 65 to 100 mm

End cover

Shaft diameter	**Dimensions** Bearing unit											**Mass** Unit
d_a	A_1	A_2	T max.	B	H	H_1	J	L	G	D_a	a	
mm	mm											kg
35	66	12	72,5	65	143	54	140	159	12	90	4	3
40	66	12	72,5	65	160	60	160	179	12	100	4	3,6
45	66	15	72,5	65	160	60	160	179	12	100	5	3,9
50	70	15	72,7	65	172,5	65	170	192	12	105	5	4,5
55	70	15	73,6	66	189	72	180	210	12	120	5	5,9
60	78	15	78,7	71	202,5	77,5	190	225	12	130	5	6,7
65	78	25	80,3	72	–	95	152	190	16	150	6	9,3
70	82	25	81,3	72	–	98	152	196	16	150	6	11
75	82	25	81,3	72	–	105	170	210	16	170	6	12
80	82,5	25	83	72	–	105	170	210	16	170	7	13
90	92	30	93,5	86	–	125	198	250	20	200	6	18
100	98	30	98,9	86	–	135	219	270	20	220	6	23


SKF

Inch roller bearing units SYE, SYR, FYE and FYR series

Bearing type
- Spherical roller bearings, 222 series

Shaft diameter range
- 1 7/16 to 4 15/16 in.

Typical shaft-bearing combinations
- Plain shaft, bearing fixed using either the locking collar method or the SKF ConCentra locking method

Seals
- Triple-lip
- Labyrinth
- Radial shaft seal

Lubrication
- Grease

Mounting
- Two-bolt mounting
- Four-bolt mounting

Material
- Grey cast iron

Compliance to standards
- Not standardized

SKF inch roller bearings units are robust, ready-to-mount units that are assembled, lubricated and sealed at the factory for maximum service life. With their simple and safe installation and easy alignment, they are an excellent alternative to sleeve-mounted bearings in split housings. The assortment for inch shafts includes SKF ConCentra units and collar-mount units.

Units of measurement
In this chapter only imperial units are used. To convert imperial units to metric units, refer to the conversion table on **page 10**.

Inch roller bearing units SYE, SYR, FYE and FYR series

Designations **693**

Standard bearing unit design **694**
Features and benefits 696
Housing material 697

Sealing solutions **697**
TriGard seals 698
Labyrinth seals 698
Radial shaft seals (garter spring seals) . 698
End plugs 698

Design considerations **700**
Bearing life 700
Typical shaft-bearing combinations . . . 700
Locating and non-locating bearing positions 700
Load carrying capacity 703
Radial internal clearance 704
Operating temperature 705
Operating speed 705
Shaft specifications 705
Attachment bolt recommendations 705

Lubrication **706**
Initial grease fill 706
Relubrication 706
Relubrication intervals 706

Mounting **707**

Condition monitoring **707**

Accessories **707**

Ordering information **707**

Product tables
17.1 SKF inch roller bearing units with a two-bolt pillow (plummer) block housing 708
17.2 SKF inch roller bearing units with a four-bolt pillow (plummer) block housing 714
17.3 SKF inch roller bearing units with a square flanged housing . . 716
17.4 SKF inch roller bearing units with a round or piloted flanged housing 718

Designations

Designation system for inch roller bearing units

F SYE 2 7/16 NH -118

Prefix

–	For pillow block units: two-bolt base
F	For pillow block units: four-bolt base

Series

SYE	Pillow block unit
SYR	Pillow block unit
FYE	Square flange unit
FYR	Round flange unit
FYRP	Piloted flange unit

Size identification

...	Shaft diameter [in.]

Suffixes[1)]

N	SKF ConCentra
H	Locating bearing unit
Y	Closed end (end plug supplied)
-3	Radial shaft seal (for collar-mount units)
-18	Labyrinth seal (for collar-mount units)
-118	Labyrinth seal (for SKF ConCentra units)

[1)] When multiple suffixes are used, they are listed in the same order as shown here.

Standard bearing unit design

SKF inch roller bearing units consist of a non-split housing, an SKF spherical roller bearing in the 222 series, seals and grease. The bearings are fixed to the shaft using either the locking collar method or the SKF ConCentra locking method (designation suffix N). Inch roller bearing units are available in different series and designs:

- Pillow (plummer) block units with two bolt holes in the base are available in two series. Units in the SYE and SYE .. N series are available for shafts ranging from 1 7/16 to 3 1/2 inches (→ **fig. 1**). Bearing units in the SYR and SYR .. N series are available for shafts ranging from 1 7/16 to 4 inches (→ **fig. 1**).
- Four-bolt base pillow (plummer) block units in the SYE series, designation FSYE and FSYE .. N, are available for shafts ranging from 2 7/16 to 4 15/16 inches (→ **fig. 1**).
- Square flange units (FYE series) are available for shafts ranging from 1 7/16 to 4 inches (→ **fig. 2**).
- Round flange units (FYR series) are available for shafts ranging from 1 7/16 to 4 inches (→ **fig. 2**).
- Piloted flange units (FYRP series) are available for shafts ranging from 1 7/16 to 4 inches (→ **fig. 2**).

Fig. 1

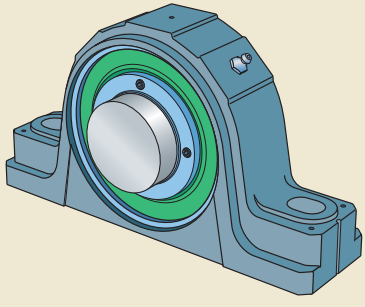

SYE .. N series

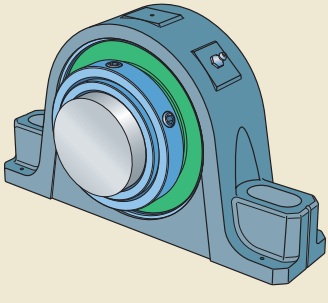

SYR series

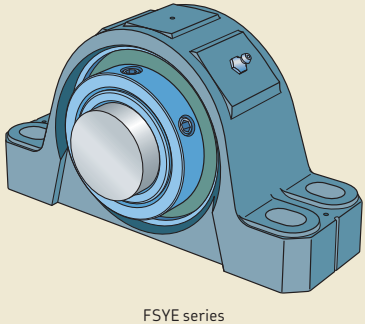

FSYE series

Fig. 2

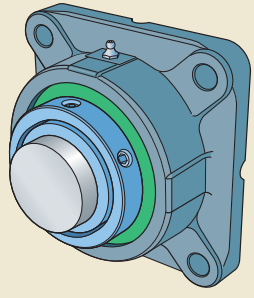

FYE series

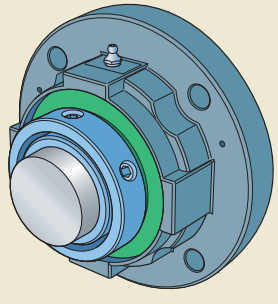

FYR series

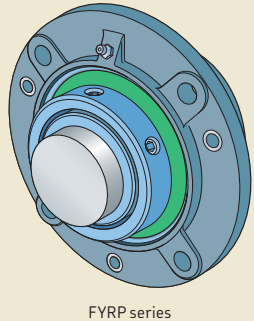

FYRP series

SKF ConCentra locking method

The SKF ConCentra locking concept is based on two sets of inclined planes (serrations): one set in the bearing bore, the other on the stepped sleeve. When the set (grub) screws in the mounting collar are tightened, the bearing is displaced axially, forcing the inner ring to expand. This does two things: it sets the correct internal clearance within the bearing and it exerts pressure on the stepped sleeve, forcing it to contract around the circumference of the shaft for a true concentric, tight fit (→ **fig. 3**). On the opposite side are set (grub) screws for dismounting. An engraving marked "MOUNT.SIDE/DISMOUNT.SIDE" shows the mounting and dismounting sides of the unit.

Fig. 3

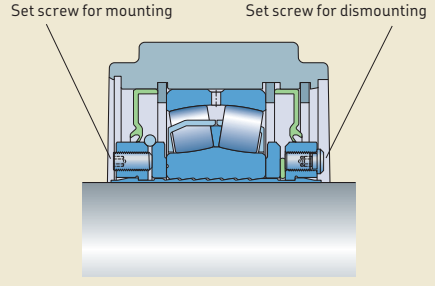

Locking collar method

The locking collar method uses a collar mounted on the extended inner ring of the bearing (→ **fig. 4**). The extended inner ring has two holes, 62° apart. The collar has two matching tapped holes, each containing a set (grub) screw. When the set (grub) screws are fully tightened, the shaft is held firmly against the inner ring of the bearing.

Fig. 4

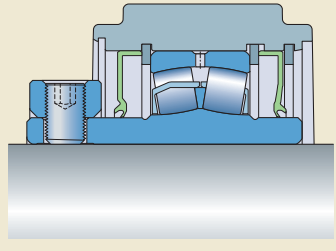

Features and benefits

SKF roller bearing units share some of the following features and benefits:

Ready-to-mount

SKF roller bearing units are assembled, greased and ready-to-mount, saving time and reducing the risk of contaminating or damaging the bearing during installation.

Simple mounting

The bearing units can be used with commercial grade shafts and are located easily on the shaft by tightening the set (grub) screws in the mounting collar or locking collar.

Stiff housing

The housing base is reinforced with ribs and the area around the attachment bolt holes is strengthened to minimize the risk of cracking caused by over-tightening the attachment bolts (→ **fig.5**).

Fig. 5

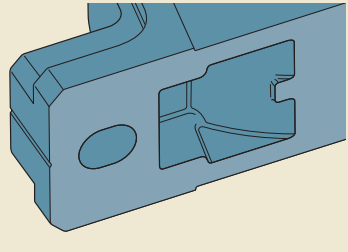

Easy replacement

With SKF inch roller bearing units, logistics costs are reduced as there is only one part to order, store and mount.

Housing material

All housings used for SKF inch roller bearing units are made of grey cast iron.

Paint, corrosion protection

The housings are painted blue (RAL 5007) using a water based alkyd/acryl paint. The paint protects the housing in accordance with ISO 12944-2, corrosivity category C2 (i.e. exterior atmospheres with low level of pollution, interior atmospheres where condensation may occur). The paint is not affected by most lubricating or engine oils, cutting fluids or alkalescent washing chemicals. Housings can be repainted with most water or solvent based 1- or 2-component paints.

Unpainted surfaces are protected by a solventless rust inhibitor.

Sealing solutions

SKF roller bearing units are available with different sealing solutions (→ **fig. 6**):

- triple-lip seals (TriGard)
- labyrinth seals
- radial shaft seals (garter spring seals)
- end plugs

Fig. 6

Sealing solutions for inch roller bearing units

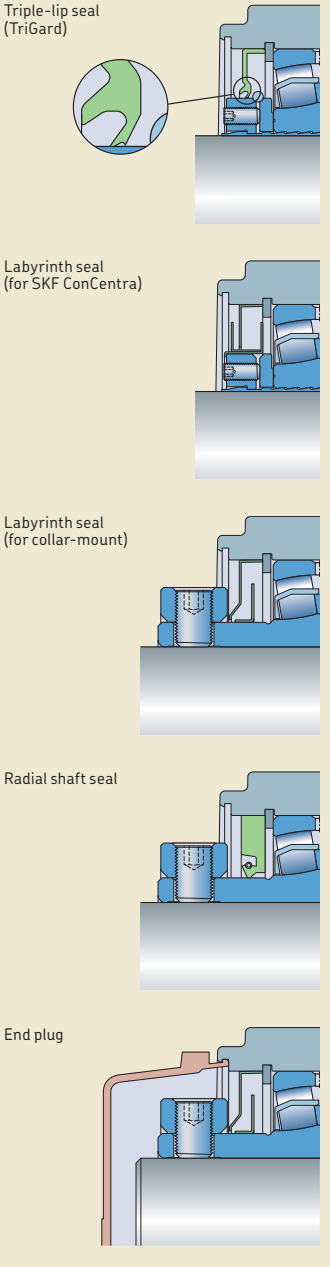

Table 1 provides an overview of the characteristics and suitability of each sealing solution. Details are provided in the following text. This information should be used as a guideline and does not substitute for testing a seal in its application.

TriGard seals

TriGard seals are standard with inch roller bearing units. These acrylonitrile-butadiene rubber (NBR) seals have the outside surface and seal lips vulcanized to a sheet steel insert. The seal consists of two lips that make contact with the mounting collar or bearing inner ring, and a third, non-contact lip, to protect the seal lips from coarse contaminants. The rubber coated outside circumference secures the seal in the housing and enhances the sealing effect.

Labyrinth seals

As labyrinth seals do not generate friction, bearing units fitted with these seals are capable of relatively high speed operation.

For SKF ConCentra units, the labyrinth is created with three sheet steel rings. Two rings are fixed to the mounting collar or back-up collar and rotate with the shaft to act as flingers. The third ring is secured in the housing bore.

For collar-mount units, the labyrinth is created with two sheet steel rings. One ring is pressed onto the extended inner ring and rotates with the shaft, acting as a flinger. The other ring is secured in the housing bore.

Radial shaft seals (garter spring seals)

Collar-mount units can be supplied with radial shaft seals on both sides, on request. The seals are made of acrylonitrile-butadiene rubber (NBR) and have no metal reinforcement. They sit firmly in the housing bore providing a static seal. The spring-loaded seal lip provides a dynamic seal against the inner ring shoulder.

End plugs

Bearing units mounted at the end of a shaft should have an end plug (end cover). End plugs for units up to 2 15/16 inches are plastic, while larger sizes are steel. Bearing units with end plugs are identified by the designation suffix Y. For information about the permissible length of the shaft end, contact the SKF application engineering service.

Table 1

Seals for inch roller bearing units

Seal		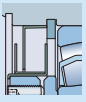			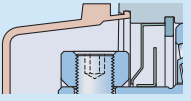
Type	triple-lip (TriGard)	labyrinth		radial shaft seal[1]	end plug
Material	nitrile rubber, steel	metal		nitrile rubber	d_a < 3 in.: plastic d_a ≥ 3 in.: steel
Application conditions and requirements					
Temperature [°F]	–5 to 230[2]	–5 to 230[2]		–5 to 230[2]	d_a < 3 in.: –5 to 230[2] d_a ≥ 3 in.: –5 to 230[2]
Max. circumferential speed[3] [m/s]	13	not limited		6	n/a
Max. misalignment [°]	1,5	1,5		1,5	n/a
Low friction	+	++		–	n/a
Axial shaft displacement	++	–		+	n/a
Vertical shaft arrangement	+	+		+	+
Sealing suitability					
Dust	++	+		++	++
Fine particles	++	+		++	++
Coarse particles	+	+		++	++
Chips	+	++		++	++
Liquids when sprayed	+	– –		++	++
Direct sunlight	+	++		+	++

Symbols: n/a not applicable ++ very suitable + suitable – limited suitability – – unsuitable

1) Option only for collar-mount units.
2) Imposed by the grease.
3) To convert circumferential speeds to rotational speeds, refer to **table 7** on **page 37**.

Design considerations

For general information about system design, refer to the following sections:

- *Typical shaft-bearing combinations* (→ **page 41**)
- *Locating/non-locating bearing arrangements* (→ **page 40**)
- *Load carrying capacity* (→ **page 44**)
- *Specifications for shafts and housing support surfaces* (→ **page 45**)

Bearing life

For information about the SKF rating life, minimum load and static safety for bearings in SKF inch roller bearing units, refer to the product information available online at skf.com/bearings. The bearing data are listed in **tables 2** and **3**.

Typical shaft-bearing combinations

SKF inch roller bearing units are designed for plain shafts.

Locating and non-locating bearing positions

SKF inch roller bearing units can be used for both the locating and non-locating bearing positions. Bearing units for the non-locating bearing position have a wide bearing seat to accommodate 1/32 in. of axial displacement, in either direction from the central position (1/16 in. maximum) (→ **fig. 7**).

Bearing units for the locating bearing position are identified by the designation suffix H. Units for the non-locating bearing position have no suffix.

Fig. 7

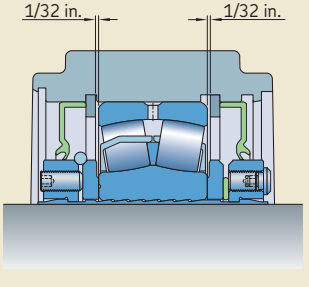

Table 2

Bearing data for inch SKF ConCentra roller bearing units

Shaft diameter		Load ratings		Fatigue load limit	Calculation factors				Bearing mean diameter
from	to	dynamic C	static C_0	P_u	e	Y_1	Y_2	Y_0	d_m
in.		lbf.		lbf.	–				in.
1 7/16	1 1/2	21 700	20 300	2 200	0.28	2.4	3.6	2.5	2.36
1 11/16	1 3/4	23 000	22 100	2 430	0.26	2.6	3.9	2.5	2.56
1 15/16	2	23 400	24 100	2 650	0.24	2.8	4.2	2.8	2.76
2 3/16		28 100	28 600	3 080	0.24	2,8	4.2	2.8	3.05
2 7/16	2 1/2	43 400	41 100	5 400	0.24	2.8	4.2	2.8	3.64
2 11/16	3	47 700	54 000	5 960	0.22	3	4.6	2.8	4.04
3 7/16	3 1/2	73 100	84 400	8 770	0.24	2.8	4.2	2.8	4,92
3 11/16	4	95 700	110 000	11 020	0.24	2.8	4.2	2.8	5.51

Table 3

Bearing data for collar-mount roller bearing units

Shaft diameter		Load ratings		Fatigue load limit	Calculation factors				Bearing mean diameter
from	to	dynamic C	static C_0	P_u	e	Y_1	Y_2	Y_0	d_m
in.		lbf.		lbf.	–				in.
1 7/16	1 1/2	16 600	18 300	2 050	0.28	2.4	3.6	2.5	2.36
1 11/16	1 3/4	17 300	19 800	2 130	0.26	2.6	3.9	2.5	2.56
1 15/16	2	19 000	22 500	2 470	0.24	2.8	4.2	2.8	2.76
2 3/16		22 400	26 500	2 900	0.24	2.8	4.2	2.8	3.05
2 7/16	2 1/2	33 300	41 100	4 770	0.24	2.8	4.2	2.8	3.64
2 11/16	3	35 500	46 800	5 310	0.22	3	4.6	2.8	4.04
3 7/16	3 1/2	56 900	76 400	8 430	0.31	2.2	3.3	2.2	4.92
3 11/16	4	69 900	93 300	11 900	0.24	2.8	4.2	2.8	5.51
4 7/16	4 1/2	91 700	126 000	12 800	0.25	2.7	4	2.5	6.10
4 15/16		123 000	180 000	17 500	0.26	2.6	3.9	2.5	7.09

Table 4

Safe loads for SYE series roller bearing units

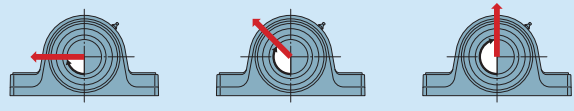

Shaft diameter from	to	Safe loads in the direction of $P_{90°}$	$P_{135°}$	$P_{180°}$
in.		lbf.		
1 7/16	1 7/16	4 000	1 800	1 800
1 1/2	1 1/2	7 200	4 200	4 800
1 11/16	1 11/16	7 200	4 200	4 800
1 3/4	1 3/4	9 200	5 000	5 600
1 15/16	2	9 200	5 000	5 600
2 3/16	2 3/16	10 200	6 200	6 900
2 7/16	2 1/2	10 400	6 400	7 000
3 11/16	3	16 000	9 600	10 800
3 7/16	3 1/2	18 000	10 400	11 800

Table 5

Safe loads for SYR series roller bearing units

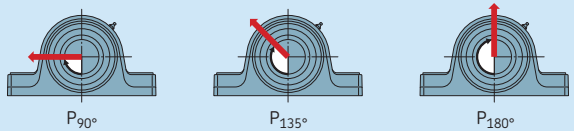

Shaft diameter from	to	Safe loads in the direction of $P_{90°}$	$P_{135°}$	$P_{180°}$
in.		lbf.		
1 7/16	1 1/2	6 200	3 200	3 900
1 11/16	1 3/4	7 800	4 400	5 200
1 15/16	2	9 000	5 200	6 400
2 3/16	2 3/16	10 400	6 200	7 400
2 7/16	2 1/2	11 600	7 000	8 300
2 11/16	3	13 000	8 200	10 000
3 7/16	3 1/2	14 600	9 200	11 300
3 11/16	4	16 000	10 000	12 400

Load carrying capacity

Pillow (plummer) blocks

SKF pillow block roller bearing units are intended for loads acting perpendicularly toward the support surface. If the bearing unit is supported over its entire base and the loads are purely perpendicular, loads are limited only by the bearing.

If loads acting in other directions occur, be sure that the magnitude of the load is permissible for the housing and the attachment bolts. Guideline values for the safe loads of the housings are provided in **tables 4** to **6**. The safe loads have been calculated using a safety factor of 5 against fracture.

If the bearing unit is not supported over its entire base, the load carrying capacity for perpendicular loads may be affected. For additional information, contact the SKF application engineering service.

For a purely axial force, static or dynamic, the permissible load on the housing should not exceed 65% of $P_{180°}$.

Additional housing support

When the housing is subjected to loads acting parallel to the support surface, it may be necessary to pin the housing to the support surface or to provide a stop to counter the load.

When loads act at angles between 55° and 120°, or when the axial loads are greater than 5% of $P_{180°}$ (→ **tables 4** to **6**), the bearing unit should be pinned to the support surface. The dowel pins should be sufficiently strong to accommodate the loads acting parallel to the support surface.

Flanged units

For the safe loads of flanged units, contact the SKF application engineering service.

Table 6

Safe loads for FSYE series roller bearing units

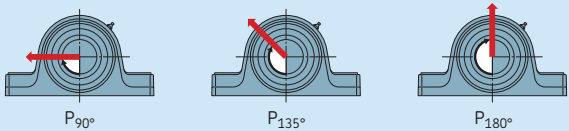

Shaft diameter from	to	Safe loads in the direction of $P_{90°}$	$P_{135°}$	$P_{180°}$
in.		lbf.		
2 7/16	3 1/2	17 200	8 800	9 500
2 11/16	3	20 800	11 000	12 000
3 7/16	3 1/2	23 600	13 600	14 400
3 11/16	4	26 800	16 200	16 600
4 7/16	4 1/2	29 600	18 600	19 200
4 15/16	4 15/16	32 800	20 600	21 200

Axial holding power

The axial holding power of SKF ConCentra roller bearing units depends on the friction between the shaft and locking device. It is therefore also dependent on the number of set (grub) screws in the mounting collar (→ **table 7**).

For collar-mount units, the axial holding power is determined by the size of the set (grub) screws (→ **table 8**). The values are valid for unhardened shafts after the set screws have been tightened to the recommended torque value.

When mounted correctly, the bearing units can withstand typical shock loads equivalent to the requisite axial holding force. However, the axial load carrying capacity of the bearing unit can be limited by the bearing.

Radial internal clearance

The clearance values for bearings in SKF inch roller bearing units are provided in **tables 9** and **10**. The values are valid for unmounted units under zero measuring load.

Table 8

Axial holding power of collar-mount roller bearing units

Shaft diameter		Set screws			Axial holding power[1]
from	to	Number	Size	Tightening torque	
in.		–		in-lbf.	lbf.
1 7/16	2 3/16	2	3/8" – 24	250	515
2 7/16	3 1/2	2	1/2" – 20	620	900
3 11/16	4	2	5/8" – 18	1 325	1 200
4 7/16	4 15/16	4	5/8" – 18	1 325	2 400

[1] Not equivalent to the axial load carrying capacity of the bearing unit.

Table 9

Radial internal clearance of bearings in SKF ConCentra roller bearing units

Shaft diameter		Radial internal clearance	
from	to	min.	max.
in.		in.	
1 7/16	1 1/2	0.0020	0.0026
1 11/16	2	0.0024	0.0031
2 3/16	2 1/2	0.0030	0.0037
2 11/16	3	0.0037	0.0047
3 7/16	4	0.0043	0.0055

Table 7

Axial holding power of SKF ConCentra roller bearing units

Shaft diameter		Set screws		Axial holding power[1]
from	to	Number	Tightening torque	
in.		–	in-lbf.	lbf.
1 7/16	2 3/16	3	66	3 350
2 7/16	2 3/4	4	66	4 500
2 15/16	3 15/16	5	66	5 600
3	3 1/2	4	66	4 500
3 7/16	4	7	66	7 850

[1] Not equivalent to the axial load carrying capacity of the bearing unit.

Table 10

Radial internal clearance of bearings in collar-mount roller bearing units

Shaft diameter		Radial internal clearance	
from	to	min.	max.
in.		in.	
1 7/16	1 1/2	0.001	0.002
1 11/16	2	0.0012	0.0022
2 3/16	2 1/2	0.0014	0.0026
2 11/16	3	0.0018	0.0031
3 7/16	4	0.0024	0.0039
4 7/16	4 1/2	0.0028	0.0047
4 15/16	5	0.0035	0.0057

Operating temperature

The permissible operating temperature is limited by the seals (→ **table 1**, **page 699**) and the lubricant (→ **table 13**, **page 706**).

The housing material does not have any additional temperature limits, except for very low temperature applications where impact strength could be a factor.

The housing paint is heat resistant up to 175 °F material temperature or 210 °F ambient temperature.

When temperatures outside the permissible range are expected, contact the SKF application engineering service.

Operating speed

The speeds at which SKF inch roller bearing units can be operated depend on the sealing solution in the bearing unit. For bearing units fitted with TriGard or radial shaft seals, the limiting speeds are based on the permissible circumferential speed at the seal lips (→ **table 1**, **page 699**). For bearing units fitted with labyrinth seals, the limiting speeds are imposed by the bearing size and grease.

Guideline values for the limiting speeds are listed in the product tables.

Shaft specifications

For SKF ConCentra units, SKF recommends using the shaft tolerances listed in **table 11** for the bearing seat. For collar-mount units, use the values listed in **table 12**.

A small lead-in chamfer should be machined at the shaft end to facilitate mounting.

Attachment bolt recommendations

In typical applications, 8.8 class (SAE J429, Grade 5) hexagon head bolts can be used together with washers. If the load does not act perpendicularly toward the base, it may be necessary to use stronger, 10.9 class (SAE J429, Grade 8) bolts.

SKF inch roller bearing units can withstand loads resulting from tightening the attachment bolts to the torque values recommended by bolt manufacturers. They are valid for oiled, but otherwise untreated, thread surfaces. SKF cannot guarantee that tightening to the recommended value will provide sufficient anchoring. Make sure that attachment bolts, dowels or stops, and a sufficiently strong support can accommodate all occurring loads.

Table 11

Shaft tolerances for SKF ConCentra units

Shaft diameter		Tolerance	
from	to	high	low
in.		in.	
1 7/16	1 1/2	0	– 0.003
1 11/16	2 1/2	0	– 0.004
2 11/16	4	0	– 0.005

Table 12

Shaft tolerances for collar-mount units

Shaft diameter		Tolerance	
from	to	high	low
in.		in.	
1 7/16	1 15/16	0	– 0.0005
2	4 15/16	0	– 0.001

Lubrication

SKF inch roller bearing units are intended for grease lubrication.

Initial grease fill

SKF inch roller bearing units are filled with a mineral oil based lithium grease that contains EP additives. The initial grease fill at the factory fills the bearing completely and 40 to 50% of the free space in the housing. The technical specifications of the grease are provided in **table 13**. The grease provides reliable performance when operating between 95 and 230 °F. During start-up, temperatures down to –5 °F are permissible. For short periods, temperatures above 230 °F can be tolerated.

For additional information about permissible temperatures of rolling bearing greases (the SKF traffic light concept), refer to the information available online at skf.com/bearings.

Relubrication

SKF inch roller bearing units are typically relubricated in order to realize maximum service life. All bearing units except those in the FYRP series have a lubrication hole with a 1/8-27 NPSF thread. They are provided standard with a grease fitting AH 1/8-27 PTF. Units in the FYRP series have a 1/4-28 UNF straight thread, and are provided with a grease fitting 1/4-28 UNF.

Relubrication intervals

To calculate the relubrication intervals refer to *Relubrication intervals* under *Metric roller bearing units* (→ **page 676**). The relevant calculation factors for SKF inch roller bearing units are provided in **tables 2** and **3** (→ **page 701**).

Relubrication procedure

Before relubricating, the grease fitting and the area surrounding it should be cleaned. High-pressure cleaning equipment should be avoided. During relubrication, grease should be introduced via the grease fitting while the shaft is rotating slowly. Excessive pressure and over-greasing should be avoided, otherwise the seals may be damaged.

Table 13

Technical specifications for the grease in SKF inch roller bearing units

Property	Specification
Thickener	Lithium soap
Base oil type	Mineral
NLGI consitency class	2
Temperature range [°F]	–5 to +230
Base oil viscosity [SUS]	
• at 105 °F	900
• at 210 °F	82

Table 14

Grease quantities for relubricating inch roller bearing units

Shaft diameter		Grease quantity
from	to	
in.		g
1 7/16	1 1/2	4
1 11/16	1 3/4	4
1 15/16	2	4
2 3/16	2 3/17	5
2 7/16	2 1/2	7
2 11/16	3	8
3 7/16	3 1/2	13
3 11/16	4	17
4 7/16	–	21
4 15/16	–	28

Relubrication quantity

The appropriate quantity of grease for relubrication of SKF inch roller bearing units is provided in **table 14**.

Greases for relubrication

To relubricate SKF inch roller bearing units, SKF recommends using SKF LGEP 2 grease, which is fully compatible with the original grease introduced at the factory. Other compatible greases such as SKF's multipurpose LGMT 2 and LGMT 3 greases can also be used.

Mounting

SKF inch roller bearing units must be mounted properly using the appropriate tools and state of the art mechanical mounting methods. All the associated components must also meet certain basic requirements (→ *Specifications for shafts and housing support surfaces* on **page 45**). Mounting instructions are provided with each unit.

The mounting collar on SKF ConCentra roller bearing units is equipped with M6 set (grub) screws, the number of which depends on the size of the bearing unit. SKF recommends using a torque wrench to tighten these set (grub) screws. The tightening torque is 66 in-lbf. A specially designed hexagonal key 3L, in accordance with ISO 2936, with a torque indicator is supplied with each bearing unit.

CAUTION: Do not tighten the set (grub) screws until the bearing unit is positioned on the shaft. If the screws are tightened prematurely, the stepped sleeve may deform.

The locking collar of collar-mount units is equipped with two set (grub) screws, the size of which depends on the bearing unit size. SKF recommends using a torque wrench to tighten these set (grub) screws. Recommended tightening torque values are provided in **table 8** (→ **page 704**).

Condition monitoring

SKF inch roller bearing units support condition monitoring during operation. For additional information about condition monitoring and the measurement tools and systems available from SKF, contact the SKF application engineering service.

Accessories

The following accessories are available for SKF inch roller bearing units:

- Grease fitting M1 1/8 NPTF
- Automatic lubricators
- Grease meter: LAGM 1000E
- Condition monitoring sensors

For additional information, refer to *SKF tools and products* (→ **page 47**).

Ordering information

SKF inch roller bearing units are supplied assembled, greased and ready-to-mount.

Order example

Two SKF ConCentra roller bearing units with a pillow (plummer) block housing in the SYE series are required for a 2 in. shaft diameter. The units should be fitted with labyrinth seals. One bearing unit will accommodate the bearing in the non-locating position at the end of the shaft. The other bearing unit will accommodate the bearing in the locating position on a through shaft.

The following items should be ordered:

- 1 bearing unit SYE 2 NY –118
- 1 bearing unit SYE 2 NH –118

17.1 SKF inch roller bearing units with a two-bolt pillow (plummer) block housing SYE, SYE .. N, SYR and SYR .. N series

d_a **1 7/16 – 2 7/16** in.

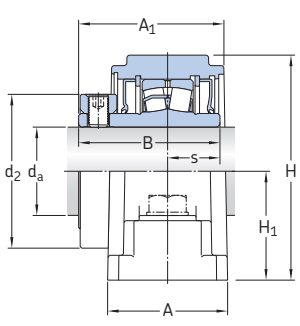

SYE

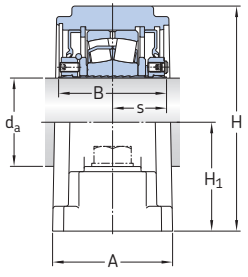

SYE .. N

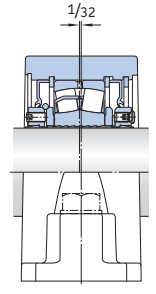

SYR .. NH

Shaft diameter d_a	Bearing unit Designation[1]	Basic load rating dynamic C	Limiting speeds TriGard seal	Labyrinth seal	Radial shaft seal	Mass	Appropriate attachment bolt size
in.		lbf.	r/min			lb.	–
1 7/16	**SYE 1 7/16**	16 600	5 100	5 300	1 700	8	1/2
	SYE 1 7/16 N	21 700	4 000	5 600	–	8	1/2
	SYR 1 7/16	16 600	5 100	5 300	1 700	7	1/2
	SYR 1 7/16 N	21 700	4 000	5 600	–	7	1/2
1 1/2	**SYE 1 1/2**	16 600	5 100	5 300	1 700	8	1/2
	SYE 1 1/2 N	21 700	4 000	5 600	–	8	1/2
	SYR 1 1/2	16 600	5 100	5 300	1 700	7	1/2
	SYR 1 1/2 N	21 700	4 000	5 600	–	7	1/2
1 11/16	**SYE 1 11/16**	17 300	4 500	4 700	1 600	9.3	1/2
	SYE 1 11/16 N	23 000	3 700	5 300	–	9.3	1/2
	SYR 1 11/16	17 300	4 500	4 700	1 600	8.1	1/2
	SYR 1 11/16 N	23 000	3 700	5 300	–	8.1	1/2
1 3/4	**SYE 1 3/4**	17 300	4 500	4 700	1 600	9.3	5/8
	SYE 1 3/4 N	23 000	3 700	5 300	–	9.3	5/8
	SYR 1 3/4	17 300	4 500	4 700	1 600	8.1	1/2
	SYR 1 3/4 N	23 000	3 700	5 300	–	8.1	1/2
1 15/16	**SYE 1 15/16**	19 000	4 100	4 250	1 450	10.5	5/8
	SYE 1 15/16 N	23 400	3 500	5 000	–	10.5	5/8
	SYR 1 15/16	19 000	4 100	4 250	1 450	9.2	5/8
	SYR 1 15/16 N	23 400	3 500	5 000	–	9.2	5/8
2	**SYE 2**	19 000	4 100	4 250	1 450	10.5	5/8
	SYE 2 N	23 400	3 500	5 000	–	10.5	5/8
	SYR 2	19 000	4 100	4 250	1 450	9.2	5/8
	SYR 2 N	23 400	3 500	5 000	–	9.2	5/8
2 3/16	**SYE 2 3/16**	22 400	3 700	3 800	1 300	13.5	5/8
	SYE 2 3/16 N	28 100	3 250	4 500	–	13.5	5/8
	SYR 2 3/16	22 400	3 700	3 800	1 300	12	5/8
	SYR 2 3/16 N	28 100	3 250	4 500	–	12	5/8
2 7/16	**SYE 2 7/16**	33 300	3 100	3 250	1 100	18.5	5/8
	SYE 2 7/16 N	43 400	2 900	3 800	–	18.5	5/8
	SYR 2 7/16	33 300	3 100	3 250	1 100	16	5/8
	SYR 2 7/16 N	43 400	2 900	3 800	–	16	5/8

[1] The listed designation is for a non-locating unit with TriGard seals. Other variants must be specified by suffixes (→ **page 693**).

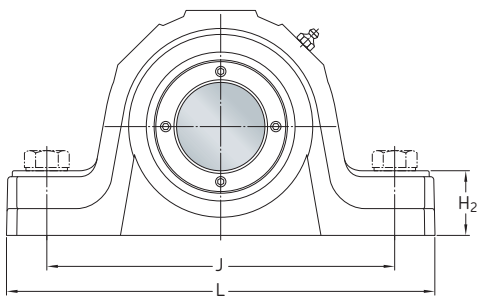

SYE ..N

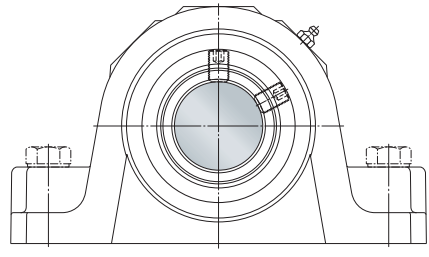

SYR

Shaft diameter	Bearing unit Designation[1]	Dimensions										
d_a		A	A_1	B	d_2	H	H_1	H_2	J max.	J min.	L	s
in.	–	in.										
1 7/16	**SYE 1 7/16**	2 1/8	2 27/32	2 3/4	2 3/8	3 7/8	1 7/8	1 1/8	6	5 1/2	7 3/8	1
	SYE 1 7/16 N	2 1/8	–	2 11/32	–	3 7/8	1 7/8	1 1/8	6	5 1/2	7 3/8	1.17
	SYR 1 7/16	2 1/8	2 13/16	2 3/4	2 3/8	3 7/8	1 7/8	1 3/16	5 5/16	4 11/16	6 7/8	1
	SYR 1 7/16 N	2 1/16	–	2 11/32	–	3 7/8	1 7/8	1 3/16	5 5/16	4 11/16	6 7/8	1.17
1 1/2	**SYE 1 1/2**	2 3/8	2 31/32	2 3/4	2 3/8	4 1/4	2 1/8	1 1/4	6 1/2	6	7 7/8	1
	SYE 1 1/2 N	2 3/8	–	2 11/32	–	4 1/4	2 1/8	1 1/4	6 1/2	6	7 7/8	1.17
	SYR 1 1/2	2 1/8	2 13/16	2 3/4	2 3/8	3 7/8	1 7/8	1 3/16	5 5/16	4 11/16	6 7/8	1
	SYR 1 1/2 N	2 1/16	–	2 11/32	–	3 7/8	1 7/8	1 3/16	5 5/16	4 11/16	6 7/8	1.17
1 11/16	**SYE 1 11/16**	2 3/8	2 31/32	2 7/8	2 5/8	4 1/4	2 1/8	1 1/4	6 1/2	6	7 7/8	1
	SYE 1 11/16 N	2 3/8	–	2 11/32	–	4 1/4	2 1/8	1 1/4	6 1/2	6	7 7/8	1.17
	SYR 1 11/16	2 3/8	2 15/16	2 7/8	2 5/8	4 1/4	2 1/8	1 5/16	5 13/16	5 3/16	7 3/8	1
	SYR 1 11/16 N	2 1/8	–	2 11/32	–	4 1/4	2 1/8	1 5/16	5 13/16	5 3/16	7 3/8	1.17
1 3/4	**SYE 1 3/4**	2 1/2	3 5/32	2 7/8	2 5/8	4 1/2	2 1/4	1 5/16	7 1/4	6 3/4	8 7/8	1
	SYE 1 3/4 N	2 1/2	–	2 11/32	–	4 1/2	2 1/4	1 5/16	7 1/4	6 3/4	8 7/8	1.17
	SYR 1 3/4	2 3/8	2 15/16	2 7/8	2 5/8	4 1/4	2 1/8	1 5/16	5 13/16	5 3/16	7 3/8	1
	SYR 1 3/4 N	2 1/8	–	2 11/32	–	4 1/4	2 1/8	1 5/16	5 13/16	5 3/16	7 3/8	1.17
1 15/16	**SYE 1 15/16**	2 1/2	3 5/32	2 7/8	2 7/8	4 1/2	2 1/4	1 5/16	7 1/4	6 3/4	8 7/8	1
	SYE 1 15/16 N	2 1/2	–	2 11/32	–	4 1/2	2 1/4	1 5/16	7 1/4	6 3/4	8 7/8	1.17
	SYR 1 15/16	2 3/8	2 15/16	2 7/8	2 7/8	4 9/16	2 1/4	1 3/8	6 9/16	5 15/16	8 3/8	1
	SYR 1 15/16 N	2 5/16	–	2 11/32	–	4 9/16	2 1/4	1 3/8	6 9/16	5 15/16	8 3/8	1.17
2	**SYE 2**	2 5/8	3 11/32	2 7/8	2 7/8	5	2 1/2	1 1/2	8	7 1/2	9 5/8	1
	SYE 2 N	2 5/8	–	2 11/32	–	5	2 1/2	1 1/2	8	7 1/2	9 5/8	1.17
	SYR 2	2 3/8	2 15/16	2 7/8	2 7/8	4 9/16	2 1/4	1 3/8	6 9/16	5 15/16	8 3/8	1
	SYR 2 N	2 5/16	–	2 11/32	–	4 9/16	2 1/4	1 3/8	6 9/16	5 15/16	8 3/8	1.17
2 3/16	**SYE 2 3/16**	2 5/8	3 11/32	3 1/8	3 1/4	5	2 1/2	1 1/2	8	7 1/2	9 5/8	1 1/8
	SYE 2 3/16 N	2 5/8	–	2 11/32	–	5	2 1/2	1 1/2	8	7 1/2	9 5/8	1.1
	SYR 2 3/16	2 3/8	3 7/16	3 1/8	3 1/4	5 11/16	2 1/2	1 5/8	7 1/16	6 13/16	8 7/8	1 1/8
	SYR 2 3/16 N	2 3/8	–	2 11/32	–	5	2 1/2	1 5/8	7 1/16	6 7/16	8 7/8	1.1
2 7/16	**SYE 2 7/16**	2 7/8	3 19/32	3 3/8	4	5 11/16	2 3/4	1 5/8	8 3/4	8 1/4	10 1/2	1 1/4
	SYE 2 7/16 N	2 7/8	–	2 37/64	–	5 11/16	2 3/4	1 5/8	8 3/4	8 1/4	10 1/2	1.29
	SYR 2 7/16	2 11/16	3 7/16	3 3/8	4	5 11/16	2 3/4	1 3/4	7 7/16	6 13/16	9 1/4	1 1/4
	SYR 2 7/16 N	2 11/16	–	2 37/64	–	5 11/16	2 3/4	1 3/4	7 7/16	6 13/16	9 1/4	1.29

[1] The listed designation is for a non-locating unit with TriGard seals. Other variants must be specified by suffixes (→ **page 693**).

17.1 SKF inch roller bearing units with a two-bolt pillow (plummer) block housing SYE, SYE .. N, SYR and SYR .. N series

d_a **2 1/2 – 3 11/16** in.

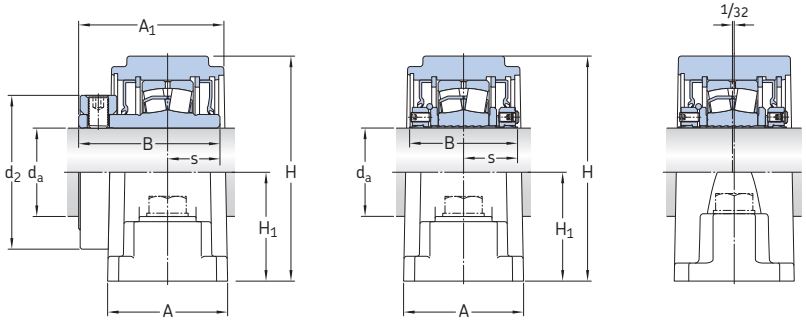

SYE SYE .. N SYR .. NH

Shaft diameter d_a	Bearing unit Designation[1]	Basic load rating dynamic C	Limiting speeds TriGard seal	Labyrinth seal	Radial shaft seal	Mass	Appropriate attachment bolt size
in.		lbf.	r/min			lb.	–
2 1/2	**SYE 2 1/2**	33 300	3 100	3 250	1 100	18.5	5/8
	SYE 2 1/2 N	43 400	2 900	3 800	–	18.5	5/8
	SYR 2 1/2	33 300	3 100	3 250	1 100	16	5/8
	SYR 2 1/2 N	43 400	2 900	3 800	–	16	5/8
2 11/16	**SYE 2 11/16**	35 500	2 800	2 800	950	25.5	3/4
	SYE 2 11/16 N	47 700	2 600	3 400	–	25.5	3/4
	SYR 2 11/16	35 500	2 800	2 800	950	22	3/4
	SYR 2 11/16 N	47 700	2 600	3 400	–	22	3/4
2 3/4	**SYE 2 3/4**	35 500	2 800	2 800	950	25	3/4
	SYE 2 3/4 N	47 700	2 600	3 400	–	25	3/4
	SYR 2 3/4	35 500	2 800	2 800	950	22	3/4
	SYR 2 3/4 N	47 700	2 600	3 400	–	22	3/4
2 15/16	**SYE 2 15/16**	35 500	2 800	2 800	950	24	3/4
	SYE 2 15/16 N	47 700	2 600	3 400	–	24	3/4
	SYR 2 15/16	35 500	2 800	2 800	950	21	3/4
	SYR 2 15/16 N	47 700	2 600	3 400	–	21	3/4
3	**SYE 3**	35 500	2 800	2 800	950	23.5	3/4
	SYE 3 N	47 700	2 600	3 400	–	23.5	3/4
	SYR 3	35 500	2 800	2 800	950	21	3/4
	SYR 3 N	47 700	2 600	3 400	–	21	3/4
3 7/16	**SYE 3 7/16**	56 900	2 300	2 200	800	35.5	7/8
	SYE 3 7/16 N	73 100	2 200	2 600	–	35.5	7/8
	SYR 3 7/16	56 900	2 300	2 200	800	31.5	7/8
	SYR 3 7/16 N	73 100	2 200	2 600	–	31.5	7/8
3 1/2	**SYE 3 1/2**	56 900	2 300	2 200	800	35.5	7/8
	SYE 3 1/2 N	73 100	2 200	2 600	–	35.5	7/8
	SYR 3 1/2	56 900	2 300	2 200	800	31.5	7/8
	SYR 3 1/2 N	73 100	2 200	2 600	–	31.5	7/8
3 11/16	**SYR 3 11/16**	69 900	2 100	2 000	700	44.5	1
	SYR 3 11/16 N	95 700	2 000	2 200	–	44.5	1

[1] The listed designation is for a non-locating unit with TriGard seals. Other variants must be specified by suffixes (→ **page 693**).

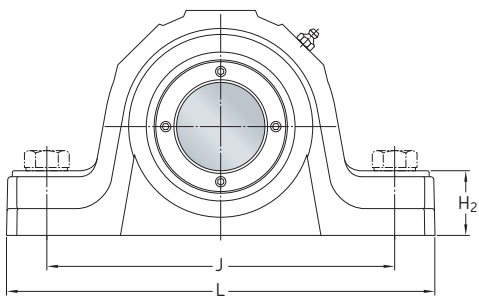

SYE ..N

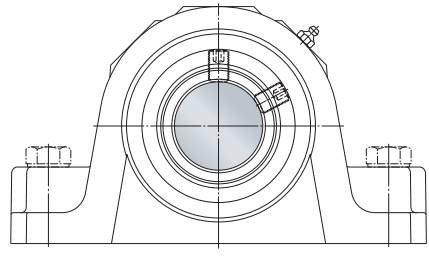

SYR

Shaft diameter	Bearing unit Designation[1]	Dimensions										
d_a		A	A_1	B	d_2	H	H_1	H_2	J max.	J min.	L	s
in.	–	in.										
2 1/2	**SYE 2 1/2**	2 7/8	3 19/32	3 3/8	4	5 11/16	2 3/4	1 5/8	8 3/4	8 1/4	10 1/2	1 1/4
	SYE 2 1/2 N	2 7/8	–	2 37/64	–	5 11/16	2 3/4	1 5/8	8 3/4	8 1/4	10 1/2	1.29
	SYR 2 1/2	2 11/16	3 7/16	3 3/8	4	5 11/16	2 3/4	1 3/4	7 7/16	6 13/16	9 1/4	1 1/4
	SYR 2 1/2 N	2 11/16	–	2 37/64	–	5 11/16	2 3/4	1 3/4	7 7/16	6 13/16	9 1/4	1.29
2 11/16	**SYE 2 11/16**	3	3 29/32	3 5/8	4 1/2	6 5/16	3 1/8	1 7/8	9 3/4	9 1/4	12	1 1/4
	SYE 2 11/16 N	3	–	2 37/64	–	6 5/16	3 1/8	1 7/8	9 3/4	9 1/4	12	1.29
	SYR 2 11/16	2 11/16	3 11/16	3 5/8	4 1/2	6 7/16	3 1/4	2 1/4	8 7/16	7 13/16	10 7/16	1 1/4
	SYR 2 11/16 N	2 11/16	–	2 37/64	–	6 7/16	3 1/4	2 1/4	8 7/16	7 13/16	10 7/16	1.29
2 3/4	**SYE 2 3/4**	3	3 29/32	3 5/8	4 1/2	6 5/16	3 1/8	1 7/8	9 3/4	9 1/4	12	1 1/4
	SYE 2 3/4 N	3	–	2 37/64	–	6 5/16	3 1/8	1 7/8	9 3/4	9 1/4	12	1.29
	SYR 2 3/4	2 11/16	3 11/16	3 5/8	4 1/2	6 7/16	3 1/4	2 1/4	8 7/16	7 13/16	10 7/16	1 1/4
	SYR 2 3/4 N	2 11/16	–	2 37/64	–	6 7/16	3 1/4	2 1/4	8 7/16	7 13/16	10 7/16	1.29
2 15/16	**SYE 2 15/16**	3	3 29/32	3 5/8	4 1/2	6 5/16	3 1/8	1 7/8	9 3/4	9 1/4	12	1 1/4
	SYE 2 15/16 N	3	–	2 37/64	–	6 5/16	3 1/8	1 7/8	9 3/4	9 1/4	12	1.29
	SYR 2 15/16	2 11/16	3 11/16	3 5/8	4 1/2	6 7/16	3 1/4	2 1/4	8 7/16	7 13/16	10 7/16	1 1/4
	SYR 2 15/16 N	2 11/16	–	2 37/64	–	6 7/16	3 1/4	2 1/4	8 7/16	7 13/16	10 7/16	1.29
3	**SYE 3**	3	3 29/32	3 5/8	4 1/2	6 5/16	3 1/8	1 7/8	9 3/4	9 1/4	12	1 1/4
	SYE 3 N	3	–	2 37/64	–	6 5/16	3 1/8	1 7/8	9 3/4	9 1/4	12	1.29
	SYR 3	2 11/16	3 11/16	3 5/8	4 1/2	6 7/16	3 1/4	2 1/4	8 7/16	7 13/16	10 7/16	1 1/4
	SYR 3 N	2 11/16	–	2 37/64	–	6 7/16	3 1/4	2 1/4	8 7/16	7 13/16	10 7/16	1.29
3 7/16	**SYE 3 7/16**	3 5/8	4 7/16	4 1/32	5 1/8	7 1/2	3 3/4	2 1/4	11 5/16	10 11/16	14	1 7/16
	SYE 3 7/16 N	3 5/8	–	3 5/32	–	7 1/2	3 3/4	2 1/4	11 5/16	10 11/16	14	1.57
	SYR 3 7/16	3 3/16	4 3/32	4 1/32	5 1/8	7 1/2	3 3/4	2 1/4	10 3/4	9 1/4	13	1 7/16
	SYR 3 7/16 N	3 3/16	–	3 5/32	–	7 1/2	3 3/4	2 1/4	10 3/4	9 1/4	13	1.57
3 1/2	**SYE 3 1/2**	3 5/8	4 7/16	4 1/32	5 1/8	7 1/2	3 3/4	2 1/4	11 5/16	10 11/16	14	1 7/16
	SYE 3 1/2 N	3 5/8	–	3 5/32	–	7 1/2	3 3/4	2 1/4	11 5/16	10 11/16	14	1.57
	SYR 3 1/2	3 3/16	4 3/32	4 1/32	5 1/8	7 1/2	3 3/4	2 1/4	10 3/4	9 1/4	13	1 7/16
	SYR 3 1/2 N	3 3/16	–	3 5/32	–	7 1/2	3 3/4	2 1/4	10 3/4	9 1/4	13	1.57
3 11/16	**SYR 3 11/16**	3 17/32	4 21/32	4 19/32	6	8 7/16	4 1/8	2 1/2	11 3/4	10	14 1/4	1 5/8
	SYR 3 11/16 N	3 17/32	–	3 3/8	–	8 7/16	4 1/8	2 1/2	11 3/4	10	14 1/4	1.61

[1] The listed designation is for a non-locating unit with TriGard seals. Other variants must be specified by suffixes (→ **page 693**).

17.1 SKF inch roller bearing units with a two-bolt pillow (plummer) block housing SYE, SYE .. N, SYR and SYR .. N series

d_a **3 15/16 – 4** in.

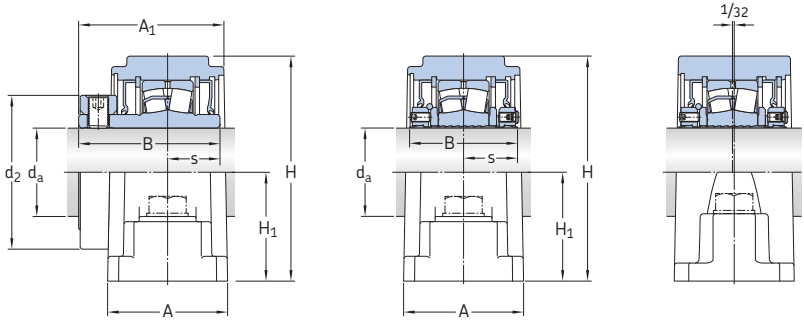

SYE SYE .. N SYR .. NH

Shaft diameter d_a	**Bearing unit** Designation[1]	**Basic load rating** dynamic C	**Limiting speeds** TriGard seal	Labyrinth seal	Radial shaft seal	**Mass**	**Appropriate attachment bolt size**
in.		lbf.	r/min			lb.	–
3 15/16	SYR 3 15/16	69 900	2 100	2 000	700	43.5	1
	SYR 3 15/16 N	95 700	2 000	2 200	–	43.5	1
4	**SYR 4**	69 900	2 100	2 000	700	43.5	1
	SYR 4 N	95 700	2 000	2 200	–	43.5	1

[1] The listed designation is for a non-locating unit with TriGard seals. Other variants must be specified by suffixes (→ **page 693**).

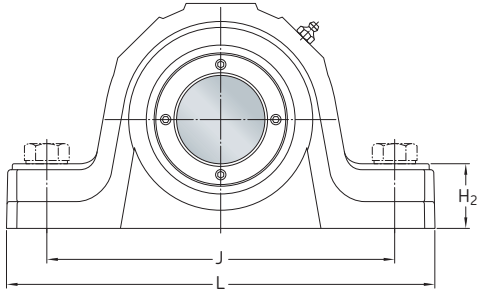

SYE ..N

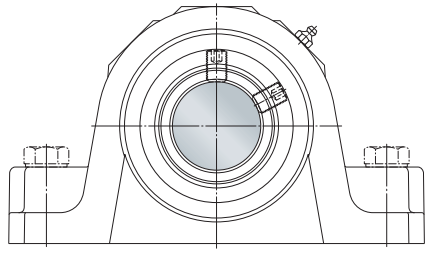

SYR

Shaft diameter	Bearing unit Designation[1]	Dimensions										
d_a		A	A_1	B	d_2	H	H_1	H_2	J max.	min.	L	s
in.	–	in.										
3 15/16	**SYR 3 15/16**	3 17/32	4 21/32	4 19/32	6	8 7/16	4 1/8	2 1/2	11 3/4	10	14 1/4	1 5/8
	SYR 3 15/16 N	3 17/32	–	3 3/8	–	8 7/16	4 1/8	2 1/2	11 3/4	10	14 1/4	1.61
4	**SYR 4**	3 17/32	4 21/32	4 19/32	6	8 7/16	4 1/8	2 1/2	11 3/4	10	14 1/4	1 5/8
	SYR 4 N	3 17/32	–	3 3/8	–	8 7/16	4 1/8	2 1/2	11 3/4	10	14 1/4	1.61

[1] The listed designation is for a non-locating unit with TriGard seals. Other variants must be specified by suffixes (→ **page 693**).

17.2 SKF inch roller bearing units with a four-bolt pillow (plummer) block housing FSYE and FSYE .. N series

d_a **2 7/16 – 4 15/16** in.

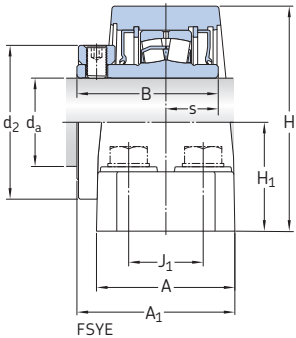

FSYE
($d_a \leq 4$ in.)

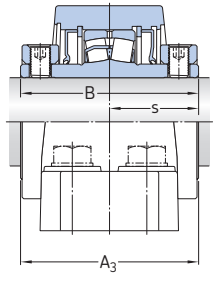

FSYE
($d_a \geq 4\ 7/16$ in.)

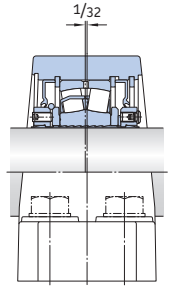

FSYE .. NH

Shaft diameter d_a	Bearing unit Designation[1]	Basic load rating dynamic C	Limiting speeds TriGard seal	Labyrinth seal	Radial shaft seal	Mass	Appropriate attachment bolt size
in.		lbf.	r/min			lb.	–
2 7/16	**FSYE 2 7/16**	33 300	3 100	3 250	1 100	19	5/8
	FSYE 2 7/16 N	43 400	2 900	3 800	–	19	5/8
2 1/2	**FSYE 2 1/2**	33 300	3 100	3 250	1 100	18.5	5/8
	FSYE 2 1/2 N	43 400	2 900	3 800	–	18.5	5/8
2 11/16	**FSYE 2 11/16**	35 500	2 800	2 800	950	25.5	5/8
	FSYE 2 11/16 N	47 700	2 600	3 400	–	25.5	5/8
2 3/4	**FSYE 2 3/4**	35 500	2 800	2 800	950	25.5	5/8
	FSYE 2 3/4 N	47 700	2 600	3 400	–	25.5	5/8
2 15/16	**FSYE 2 15/16**	35 500	2 800	2 800	950	24	5/8
	FSYE 2 15/16 N	47 700	2 600	3 400	–	24	5/8
3	**FSYE 3**	35 500	2 800	2 800	950	24	5/8
	FSYE 3 N	47 700	2 600	3 400	–	24	5/8
3 7/16	**FSYE 3 7/16**	56 900	2 300	2 200	800	36.5	3/4
	FSYE 3 7/16 N	73 100	2 200	2 600	–	36.5	3/4
3 1/2	**FSYE 3 1/2**	56 900	2 300	2 200	800	36.5	3/4
	FSYE 3 1/2 N	73 100	2 200	2 600	–	36.5	3/4
3 11/16	**FSYE 3 11/16**	69 900	2 100	2 000	700	50.5	3/4
	FSYE 3 11/16 N	95 700	2 000	2 200	–	50.5	3/4
3 15/16	**FSYE 3 15/16**	69 900	2 100	2 000	700	49.5	3/4
	FSYE 3 15/16 N	95 700	2 000	2 200	–	49.5	3/4
4	**FSYE 4**	69 900	2 100	2 000	700	49.5	3/4
	FSYE 4 N	95 700	2 000	2 200	–	49.5	3/4
4 7/16	**FSYE 4 7/16**	91 700	1 900	–	–	71	3/4
4 1/2	**FSYE 4 1/2**	91 700	1 900	–	–	71	3/4
4 15/16	**FSYE 4 15/16**	123 000	1 650	–	–	100	7/8

[1] The listed designation is for a non-locating unit with TriGard seals. Other variants must be specified by suffixes (→ **page 693**).

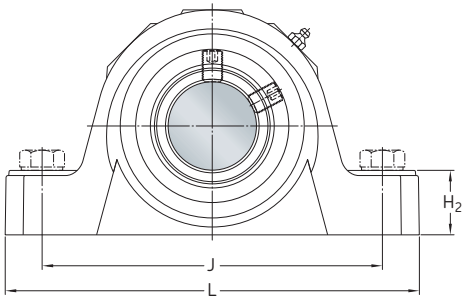

FSYE

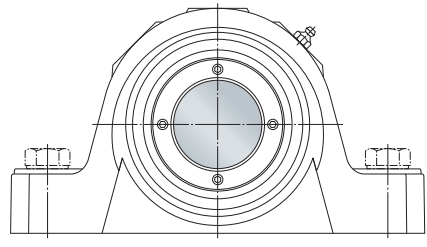

FSYE .. N

Shaft diameter	Bearing unit Designation[1]	Dimensions											
d_a		A	A_1	B	d_2	H	H_1	H_2	J max.	J min.	J_1	L	s
in.	–	in.											
2 7/16	**FSYE 2 7/16**	3 1/2	3 19/32	3 3/8	4	5 11/16	2 3/4	1 5/8	8 3/4	8 1/4	1 7/8	10 1/2	1 1/4
	FSYE 2 7/16 N	3 1/2	–	2 37/64	–	5 11/16	2 3/4	1 5/8	8 3/4	8 1/4	1 7/8	10 1/2	1.29
2 1/2	**FSYE 2 1/2**	3 1/2	3 19/32	3 3/8	4	5 11/16	2 3/4	1 5/8	8 3/4	8 1/4	1 7/8	10 1/2	1 1/4
	FSYE 2 1/2 N	3 1/2	–	2 37/64	–	5 11/16	2 3/4	1 5/8	8 3/4	8 1/4	1 7/8	10 1/2	1.29
2 11/16	**FSYE 2 11/16**	4	3 29/32	3 5/8	4 1/2	6 5/16	3 1/8	1 7/8	9 7/8	9 1/8	2 1/8	12	1 1/4
	FSYE 2 11/16 N	4	–	2 37/64	–	6 5/16	3 1/8	1 7/8	9 7/8	9 1/8	2 1/8	12	1.29
2 3/4	**FSYE 2 3/4**	4	3 29/32	3 5/8	4 1/2	6 5/16	3 1/8	1 7/8	9 7/8	9 1/8	2 1/8	12	1 1/4
	FSYE 2 3/4 N	4	–	2 37/64	–	6 5/16	3 1/8	1 7/8	9 7/8	9 1/8	2 1/8	12	1.29
2 15/16	**FSYE 2 15/16**	4	3 29/32	3 5/8	4 1/2	6 5/16	3 1/8	1 7/8	9 7/8	9 1/8	2 1/8	12	1 1/4
	FSYE 2 15/16 N	4	–	2 37/64	–	6 5/16	3 1/8	1 7/8	9 7/8	9 1/8	2 1/8	12	1.29
3	**FSYE 3**	4	3 29/32	3 5/8	4 1/2	6 5/16	3 1/8	1 7/8	9 7/8	9 1/8	2 1/8	12	1 1/4
	FSYE 3 N	4	–	2 37/64	–	6 5/16	3 1/8	1 7/8	9 7/8	9 1/8	2 1/8	12	1.29
3 7/16	**FSYE 3 7/16**	4 1/2	4 7/16	4 1/32	5 1/8	7 1/2	3 3/4	2 1/4	11 7/16	10 9/16	2 3/8	14	1 7/16
	FSYE 3 7/16 N	4 1/2	–	3 9/64	–	7 1/2	3 3/4	2 1/4	11 7/16	10 9/16	2 3/8	14	1.57
3 1/2	**FSYE 3 1/2**	4 1/2	4 7/16	4 1/32	5 1/8	7 1/2	3 3/4	2 1/4	11 7/16	10 9/16	2 3/8	14	1 7/16
	FSYE 3 1/2 N	4 1/2	–	3 9/64	–	7 1/2	3 3/4	2 1/4	11 7/16	10 9/16	2 3/8	14	1.57
3 11/16	**FSYE 3 11/16**	4 1/2	4 7/8	4 19/32	6	8 9/16	4 1/4	2 7/16	13	12	2 1/4	15 1/4	1 5/8
	FSYE 3 11/16 N	4 1/2	–	3 25/34	–	8 9/16	4 1/4	2 7/16	13	12	2 1/4	15 1/4	1.61
3 15/16	**FSYE 3 15/16**	4 1/2	4 7/8	4 19/32	6	8 9/16	4 1/4	2 7/16	13	12	2 1/4	15 1/4	1 5/8
	FSYE 3 15/16 N	4 1/2	–	3 25/34	–	8 9/16	4 1/4	2 7/16	13	12	2 1/4	15 1/4	1.61
4	**FSYE 4**	4 1/2	4 7/8	4 19/32	6	8 9/16	4 1/4	2 7/16	13	12	2 1/4	15 1/4	1 5/8
	FSYE 4 N	4 1/2	–	3 25/34	–	8 9/16	4 1/4	2 7/16	13	12	2 1/4	15 1/4	1.61
4 7/16	**FSYE 4 7/16**	4 5/8	6 1/8	6 1/8	6 1/8	9 3/8	4 3/4	2 3/4	13 7/8	13 1/8	2 1/2	16 5/8	3 1/16
4 1/2	**FSYE 4 1/2**	4 5/8	6 1/8	6 1/8	6 1/8	9 3/8	4 3/4	2 3/4	13 7/8	13 1/8	2 1/2	16 5/8	3 1/16
4 15/16	**FSYE 4 15/16**	5 1/8	6 5/8	6 5/8	6 7/8	10 7/8	5 1/2	3	15 7/8	15 1/8	2 3/4	18 1/2	3 5/16

[1] The listed designation is for a non-locating unit with TriGard seals. Other variants must be specified by suffixes (→ **page 693**).

17.3 20.3 SKF inch roller bearing units with a square flanged housing FYE series

d_a **1 7/16 – 4** in.

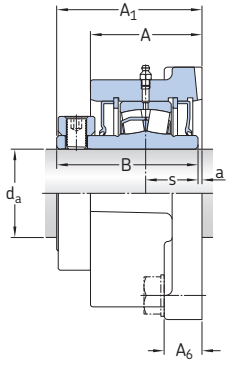

FYE

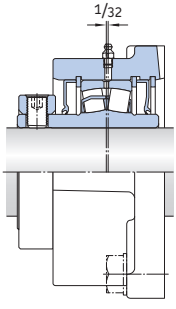

FYE .. H

Shaft diameter d_a	**Bearing unit** Designation[1]	**Basic load rating** dynamic C	**Limiting speeds** TriGard seal	Labyrinth seal	Radial shaft seal	**Mass**	**Appropriate attachment bolt size**
in.		lbf.	r/min			lb.	–
1 7/16	**FYE 1 7/16**	16 600	5 100	5 300	1 700	7.2	1/2
1 1/2	**FYE 1 1/2**	16 600	5 100	5 300	1 600	10	1/2
1 11/16	**FYE 1 11/16**	17 300	4 500	4 700	1 600	10	1/2
1 3/4	**FYE 1 3/4**	17 300	4 500	4 700	1 450	11	1/2
1 15/16	**FYE 1 15/16**	19 000	4 100	4 250	1 450	11	1/2
2	**FYE 2**	19 000	4 100	4 250	1 450	11	1/2
2 3/16	**FYE 2 3/16**	22 400	3 700	3 800	1 300	13.5	5/8
2 7/16	**FYE 2 7/16**	33 300	3 100	3 250	1 100	17.5	5/8
2 1/2	**FYE 2 1/2**	33 300	3 100	3 250	1 100	17	5/8
2 11/16	**FYE 2 11/16**	35 500	2 800	2 800	950	28.5	3/4
2 3/4	**FYE 2 3/4**	35 500	2 800	2 800	950	28.5	3/4
2 15/16	**FYE 2 15/16**	35 500	2 800	2 800	950	27	3/4
3	**FYE 3**	35 500	2 800	2 800	950	27	3/4
3 7/16	**FYE 3 7/16**	56 900	2 300	2 200	800	40.5	3/4
3 1/2	**FYE 3 1/2**	56 900	2 300	2 200	800	40	3/4
3 11/16	**FYE 3 11/16**	69 900	2 100	2 000	700	64	7/8
3 15/16	**FYE 3 15/16**	69 900	2 100	2 000	700	69	7/8
4	**FYE 4**	69 900	2 100	2 000	700	68	7/8

[1] The listed designation is for a non-locating unit with TriGard seals. Other variants must be specified by suffixes (→ **page 693**).

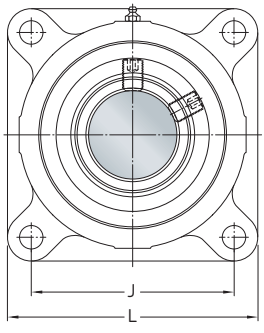

Shaft diameter	Bearing unit Designation[1]	Dimensions							
d_a		A_1	A_6	T	B	J	L	a	s
in.	–	in.							
1 7/16	**FYE 1 7/16**	2 1/4	3/4	2 27/32	2 3/4	3 1/2	4 5/8	3/32	1
1 1/2	**FYE 1 1/2**	2 5/16	3/4	2 9/32	3 3/4	4 1/8	5 3/8	5/32	1
1 11/16	**FYE 1 11/16**	2 5/16	3/4	3 1/32	2 7/8	4 1/8	5 3/8	5/32	1
1 3/4	**FYE 1 3/4**	2 1/4	3/4	2 31/32	2 7/8	4 1/4	5 1/2	3/32	1
1 15/16	**FYE 1 15/16**	2 1/4	3/4	2 31/32	2 7/8	4 1/4	5 1/2	3/32	1
2	**FYE 2**	2 1/4	3/4	2 31/32	2 7/8	4 1/4	5 1/2	3/32	1
2 3/16	**FYE 2 3/16**	2 3/8	3/4	3 7/32	3 1/8	4 3/4	6 1/4	3/32	1 1/8
2 7/16	**FYE 2 7/16**	2 3/4	1	3 15/32	3 3/8	5 3/8	6 7/8	3/32	1 1/4
2 1/2	**FYE 2 1/2**	2 3/4	1	3 15/32	3 3/8	5 3/8	6 7/8	3/32	1 1/4
2 11/16	**FYE 2 11/16**	2 3/4	1 1/16	3 7/8	3 5/8	6	7 5/8	1/4	1 1/4
2 3/4	**FYE 2 3/4**	2 3/4	1 1/16	3 7/8	3 5/8	6	7 5/8	1/4	1 1/4
2 15/16	**FYE 2 15/16**	2 3/4	1 1/16	3 7/8	3 5/8	6	7 5/8	1/4	1 1/4
3	**FYE 3**	2 3/4	1 1/16	3 7/8	3 5/8	6	7 5/8	1/4	1 1/4
3 7/16	**FYE 3 7/16**	3 5/16	1 1/8	4 1/4	4 1/32	7	8 3/4	7/32	1 7/16
3 1/2	**FYE 3 1/2**	3 5/16	1 1/8	4 1/4	4 1/32	7	8 3/4	7/32	1 7/16
3 11/16	**FYE 3 11/16**	3 1/2	1 1/4	4 13/16	4 13/16	7 3/4	9 3/4	7/32	1 5/8
3 15/16	**FYE 3 15/16**	3 1/2	1 1/4	4 13/16	4 13/16	7 3/4	9 3/4	7/32	1 5/8
4	**FYE 4**	3 1/2	1 1/4	4 13/16	4 13/16	7 3/4	9 3/4	7/32	1 5/8

[1] The listed designation is for a non-locating unit with TriGard seals. Other variants must be specified by suffixes (→ **page 693**).

17.4 SKF inch roller bearing units with a round or piloted flanged housing
FYR and FYRP series
d_a **1 7/16 – 2 11/16** in.

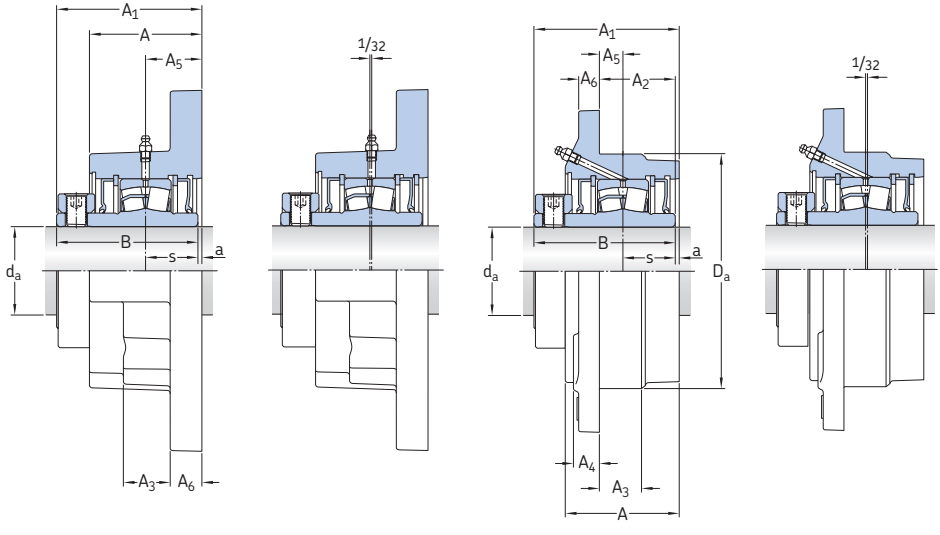

FYR FYR .. H FYRP FYRP .. H

Shaft diameter d_a	Bearing unit Designation[1]	Basic load rating dynamic C	Limiting speeds TriGard seal	Labyrinth seal	Radial shaft seal	Mass	Appropriate attachment bolt size
in.		lbf.	r/min			lb.	–
1 7/16	**FYR 1 7/16**	16 600	5 100	5 300	1 700	8.5	1/2 [2]
	FYRP 1 7/16	16 600	5 100	5 300	1 700	6.3	3/8
1 1/2	**FYR 1 1/2**	16 600	5 100	5 300	1 700	8.4	1/2 [2]
	FYRP 1 1/2	16 600	5 100	5 300	1 700	6.3	3/8
1 11/16	**FYR 1 11/16**	17 300	4 500	4 700	1 600	10.5	1/2
	FYRP 1 11/16	17 300	4 500	4 700	1 600	7.8	7/16
1 3/4	**FYR 1 3/4**	17 300	4 500	4 700	1 600	11	1/2
	FYRP 1 3/4	17 300	4 500	4 700	1 600	7.7	7/16
1 15/16	**FYR 1 15/16**	19 000	4 100	4 250	1 450	11	1/2
	FYRP 1 15/16	19 000	4 100	4 250	1 450	8.2	1/2
2	**FYR 2**	19 000	4 100	4 250	1 450	10.5	1/2
	FYRP 2	19 000	4 100	4 250	1 450	8.2	1/2
2 3/16	**FYR 2 3/16**	22 400	3 700	3 800	1 300	13.5	5/8
	FYRP 2 3/16	22 400	3 700	3 800	1 300	9.9	1/2
2 7/16	**FYR 2 7/16**	33 300	3 100	3 250	1 100	17.5	5/8
	FYRP 2 7/16	33 300	3 100	3 250	1 100	14	1/2
2 1/2	**FYR 2 1/2**	33 300	3 100	3 250	1 100	17.5	5/8
	FYRP 2 1/2	33 300	3 100	3 250	1 100	13.5	1/2
2 11/16	**FYR 2 11/16**	35 500	2 800	2 800	950	27	3/4
	FYRP 2 11/16	35 500	2 800	2 800	950	20.5	5/8

[1] The listed designation is for a non-locating unit with TriGard seals. Other variants must be specified by suffixes (→ **page 693**).
[2] The units are supplied with three attachment bolt holes, which are placed in an angle of 120°.

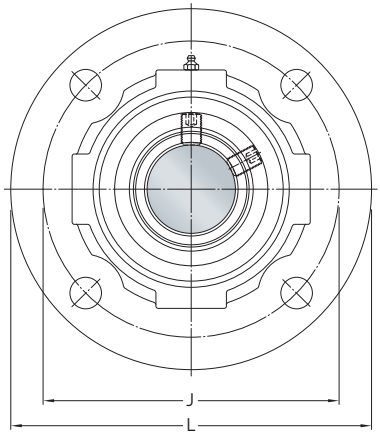

FYR

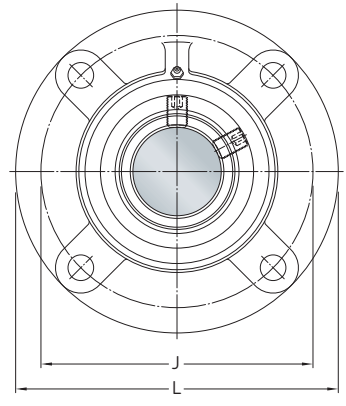

FYRP

Shaft diameter	Bearing unit Designation[1]	Dimensions												
d_a		A	A_6	A_3	A_4	A_1	B	A_5	a	D_a	J	L	s	A_2
in.	–	in.												
1 7/16	**FYR 1 7/16**	2 1/16	3/4	3/4	–	2 7/8	2 3/4	1 3/32	1/8	3 7/8	5	6 1/4	31/32	–
	FYRP 1 7/16	2 1/4	1/2	3/4	23/32	2 57/64	2 3/4	27/64	9/64	3 5/8	4 3/8	5 1/4	31/32	1 25/64
1 1/2	**FYR 1 1/2**	2 1/16	3/4	3/4	–	2 7/8	2 3/4	1 3/32	1/8	3 7/8	5	6 1/4	31/32	–
	FYRP 1 1/2	2 1/4	1/2	3/4	23/32	2 57/64	2 3/4	27/64	9/64	3 5/8	4 3/8	5 1/4	31/32	1 25/64
1 11/16	**FYR 1 11/16**	2 1/4	3/4	1 3/16	–	3	2 7/8	1 3/32	1/8	4 1/2	5 1/2	6 3/4	31/32	–
	FYRP 1 11/16	2 1/2	1/2	7/8	5/8	3 5/32	2 7/8	5/8	9/32	4 1/4	5 1/8	6 1/8	31/32	1 19/32
1 3/4	**FYR 1 3/4**	2 1/4	3/4	1 3/16	–	3	2 7/8	1 3/32	1/8	4 1/2	5 1/2	6 3/4	31/32	–
	FYRP 1 3/4	2 1/2	1/2	7/8	5/8	3 5/32	2 7/8	5/8	9/32	4 1/4	5 1/8	6 1/8	31/32	1 19/32
1 15/16	**FYR 1 15/16**	2 1/4	3/4	1 3/16	–	3	2 7/8	1 3/32	1/8	4 3/4	5 3/4	7	31/32	–
	FYRP 1 15/16	2 1/2	9/16	7/8	5/8	3 5/32	2 7/8	5/8	9/32	4 1/2	5 3/8	6 3/8	31/32	1 19/32
2	**FYR 2**	2 1/4	3/4	1 3/16	–	3	2 7/8	1 3/32	1/8	4 3/4	5 3/4	7	31/32	–
	FYRP 2	2 1/2	9/16	7/8	5/8	3 5/32	2 7/8	5/8	9/32	4 1/2	5 3/8	6 3/8	31/32	1 19/32
2 3/16	**FYR 2 3/16**	2 3/8	3/4	1 5/16	–	3 1/4	3 1/8	1 7/32	1/8	5 1/8	6 3/8	7 3/4	1 3/32	–
	FYRP 2 3/16	2 9/16	9/16	1	23/32	3 5/16	3 1/8	9/16	3/16	5	6	7 1/8	1 3/32	1 21/32
2 7/16	**FYR 2 7/16**	2 9/16	1 5/16	1 5/16	–	3 1/2	3 3/8	1 11/32	1/8	5 3/4	6 3/4	8 1/8	1 7/32	–
	FYRP 2 7/16	2 5/8	5/8	1	13/16	3 1/2	3 3/8	15/32	1/8	5 1/2	6 1/2	7 5/8	1 7/32	1 11/16
2 1/2	**FYR 2 1/2**	2 9/16	1 5/16	1 5/16	–	3 1/2	3 3/8	1 11/32	1/8	5 3/4	6 3/4	8 1/8	1 7/32	–
	FYRP 2 1/2	2 5/8	5/8	1	13/16	3 1/2	3 3/8	15/32	1/8	5 1/2	6 1/2	7 5/8	1 7/32	1 11/16
2 11/16	**FYR 2 11/16**	2 7/8	1 5/16	1 3/16	–	3 7/8	3 5/8	1 15/32	1/4	6 5/8	7 7/8	9 1/2	1 7/32	–
	FYRP 2 11/16	3 1/8	1 1/16	1 1/4	13/16	3 29/32	3 5/8	13/16	9/32	6 3/8	7 1/2	8 3/4	1 7/32	2 1/32

[1] The listed designation is for a non-locating unit with TriGard seals. Other variants must be specified by suffixes (→ **page 693**).

17.4 SKF inch roller bearing units with a round or piloted flanged housing
FYR and FYRP series
d_a **2 3/4 – 4** in.

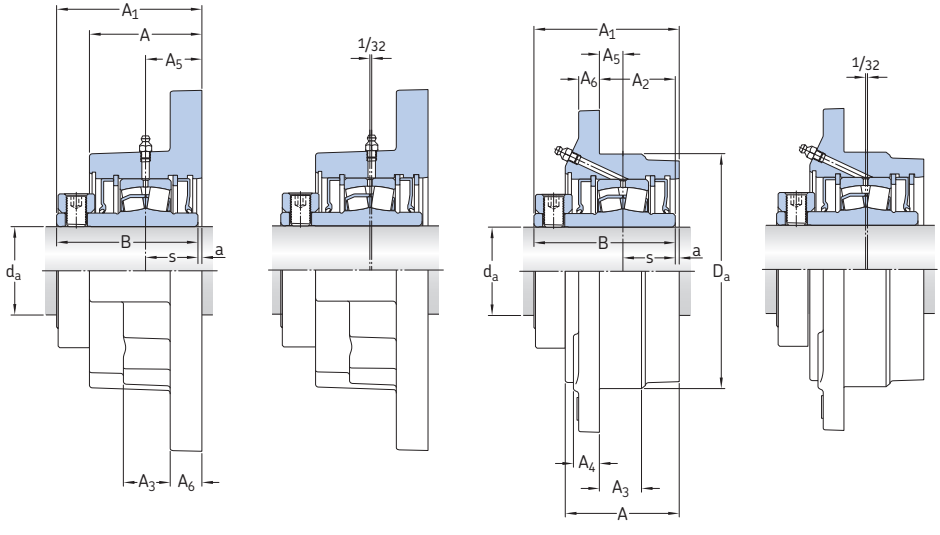

FYR FYR .. H FYRP FYRP .. H

Shaft diameter d_a	Bearing unit Designation[1]	Basic load rating dynamic C	Limiting speeds TriGard seal	Labyrinth seal	Radial shaft seal	Mass	Appropriate attachment bolt size
in.		lbf.	r/min			lb.	–
2 3/4	**FYR 2 3/4**	35 500	2 800	2 800	950	27	3/4
	FYRP 2 3/4	35 500	2 800	2 800	950	20.5	5/8
2 15/16	**FYR 2 15/16**	35 500	2 800	2 800	950	26	3/4
	FYRP 2 15/16	35 500	2 800	2 800	950	19.5	5/8
3	**FYR 3**	35 500	2 800	2 800	950	26	3/4
	FYRP 3	35 500	2 800	2 800	950	19.5	5/8
3 7/16	**FYR 3 7/16**	56 900	2 300	2 200	800	38.0	3/4
	FYRP 3 7/16	56 900	2 300	2 200	800	30	3/4
3 1/2	**FYR 3 1/2**	56 900	2 300	2 200	800	38	3/4
	FYRP 3 1/2	56 900	2 300	2 200	800	29.0	3/4
3 11/16	**FYR 3 11/16**	69 900	2 100	2 000	700	53.0	7/8
	FYRP 3 11/16	69 900	2 100	2 000	700	41	3/4
3 15/16	**FYR 3 15/16**	69 900	2 100	2 000	700	52	7/8
	FYRP 3 15/16	69 900	2 100	2 000	700	40.0	3/4
4	**FYR 4**	69 900	2 100	2 000	700	52.0	7/8
	FYRP 4	69 900	2 100	2 000	700	40	3/4

[1] The listed designation is for a non-locating unit with TriGard seals. Other variants must be specified by suffixes (→ **page 693**).

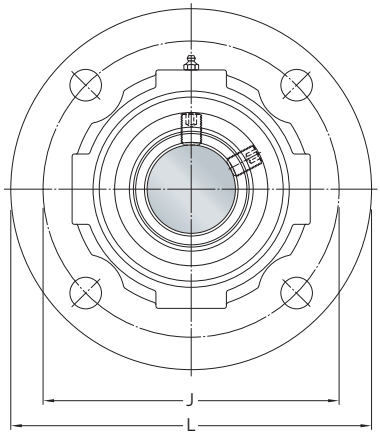

FYR

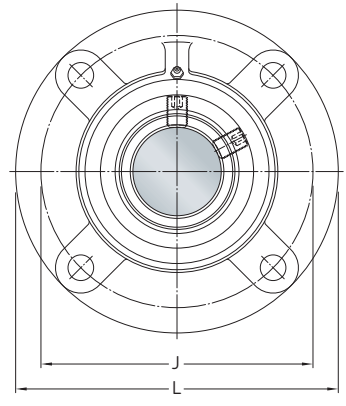

FYRP

Shaft diameter	Bearing unit Designation[1]	Dimensions												
d_a		A	A_6	A_3	A_4	A_1	B	A_5	a	D_a	J	L	s	A_2
in.	–	in.												
2 3/4	**FYR 2 3/4**	2 7/8	1 5/16	1 3/16	–	3 7/8	3 5/8	1 15/32	1/4	6 5/8	7 7/8	9 1/2	1 7/32	–
	FYRP 2 3/4	3 1/8	1 1/16	1 1/4	13/16	3 29/32	3 5/8	13/16	9/32	6 3/8	7 1/2	8 3/4	1 7/32	2 1/32
2 15/16	**FYR 2 15/16**	2 7/8	1 5/16	1 3/16	–	3 7/8	3 5/8	1 15/32	1/4	6 5/8	7 7/8	9 1/2	1 7/32	–
	FYRP 2 15/16	3 1/8	1 1/16	1 1/4	13/16	3 29/32	3 5/8	13/16	9/32	6 3/8	7 1/2	8 3/4	1 7/32	2 1/32
3	**FYR 3**	2 7/8	1 5/16	1 3/16	–	3 7/8	3 5/8	1 15/32	1/4	6 5/8	7 7/8	9 1/2	1 7/32	–
	FYRP 3	3 1/8	1 1/16	1 1/4	13/16	3 29/32	3 5/8	13/16	9/32	6 3/8	7 1/2	8 3/4	1 7/32	2 1/32
3 7/16	**FYR 3 7/16**	3 1/16	1 1/8	1 3/16	–	4 9/32	4 1/32	1 21/32	1/4	7 5/8	9 1/2	11 1/8	1 15/32	–
	FYRP 3 7/16	3 3/16	7/8	1 1/4	1 1/16	4 7/32	4 1/32	17/32	3/16	7 3/8	8 5/8	10 1/4	1 15/32	1 15/16
3 1/2	**FYR 3 1/2**	3 1/16	1 1/8	1 3/16	–	4 9/32	4 1/32	1 21/32	1/4	7 5/8	9 1/2	11 1/8	1 15/32	–
	FYRP 3 1/2	3 3/16	7/8	1 1/4	1 1/16	4 7/32	4 1/32	17/32	3/16	7 3/8	8 5/8	10 1/4	1 15/32	1 15/16
3 11/16	**FYR 3 11/16**	3 1/2	1 1/8	1 7/16	–	4 27/32	4 19/32	1 27/32	1/4	8 3/8	10 3/4	12 5/8	1 19/32	–
	FYRP 3 11/16	3 5/8	7/8	2	1	4 13/16	4 19/32	13/16	7/32	8 1/8	9 3/8	10 7/8	1 19/32	2 13/32
3 15/16	**FYR 3 15/16**	3 1/2	1 1/8	1 7/16	–	4 27/32	4 19/32	1 27/32	1/4	8 3/8	10 3/4	12 5/8	1 19/32	–
	FYRP 3 15/16	3 5/8	7/8	2	1	4 13/16	4 19/32	13/16	7/32	8 1/8	9 3/8	10 7/8	1 19/32	2 13/32
4	**FYR 4**	3 1/2	1 1/8	1 7/16	–	4 27/32	4 19/32	1 27/32	1/4	8 3/8	10 3/4	12 5/8	1 19/32	–
	FYRP 4	3 5/8	7/8	2	1	4 13/16	4 19/32	13/16	7/32	8 1/8	9 3/8	10 7/8	1 19/32	2 13/32

Indexes

18.1 Text index **723**

18.2 Product index **738**

18.3 Bearing index **742**
Self-aligning ball bearings 742
Spherical roller bearings. 747
CARB toroidal roller bearings 770
Other bearing types 777

Text index

A

A
FNL flanged housings 533, 535, 546–551
SBD plummer block housings 487, 494, 502–525
SBFN felt roll housings 591
SBPN drying cylinder housings (p) 591, 608–610, 612–613
SBPN drying cylinder housings (s) 591, 606–612
SED plummer block housings 333, 337
THD take-up housings 487, 494, 526–529
abutments → shaft abutments
adapter rings
in SBD plummer block housings 487, 490–491, 501
in SONL plummer block housings 356
in THD take-up housings 487, 490–491, 501
adapter sleeve mounting
applicable housings 30–32
axial load carrying capacity 44
compared with other shaft-bearing combinations 42
shaft specifications 45
adapter sleeves 25
adapters 48
air handling units 666
angular contact ball bearings
applicable housings 32
in PD two-bearing housings 555–556, 560–563, 576–577
suitability for SKF housings 40
application-specific housings 34
attachment bolt holes 24
per housing series 30–34
attachment bolts 24
tightening 50
automatic lubricators 47
axial displacement → axial shaft displacement
axial loads
breaking loads 44
induced 41
on bearings on sleeves 44
axial movement → axial shaft displacement
axial position measuring systems 632
axial shaft displacement 40
relubrication via the outer ring 46

B

B
FNL flanged housings 533, 535, 546–551
SBD plummer block housings 487, 494, 502–525
SBFN felt roll housings 591
SBPN drying cylinder housings 591, 606–612
SED plummer block housings 333, 337
THD take-up housings 487, 494, 526–529
B..
SBPN drying cylinder housings 591, 594, 606–612
SDM Yankee cylinder housings 591, 594, 606–612
back-up collars 662–663
base ends 24
base planes 24
base sides 24
bases 24
bearing arrangements 40–41
in PD two-bearing housings 564
bearing housings → housings
bearing seats 25
distortion 50
in locating/non-locating housings 40, 50
shaft specifications 45
with non-standard tolerance classes 35
bearing units → roller bearing units
bearings
index 742–777
per housing series 30–34
suitability for SKF housings 35, 40
biodegradable greases 39, 46
blowers 666
bolt tensioners 50
breaking loads 44
bushings 626, 631

C

C 487, 493, 495
cap bolts 24
yield strength 44
caps 24
CARB toroidal roller bearings
applicable housings 30–34
in FNL flanged housings 539, 543, 546–551
in SAF pillow blocks 410, 414, 430–433, 444–447
in SBD plummer block housings 490, 498
in SBFN felt roll housings 592, 598–599
in SBPN drying cylinder housings 592, 598–599, 606–613
in SDAF pillow blocks 463
in SDM Yankee cylinder housings 592, 598–599, 614–621
in SKND converter trunnion housings 626–627, 630, 634–637
in SNL 2, 3, 5 & 6 plummer block housings 72, 80, 86–137
in SNL 30, 31 & 32 plummer block housings 204, 214, 222–329
in SNLN plummer block housings 168, 174, 180–187
in SONL plummer block housings 356, 360, 367, 370–381
in THD take-up housings 490, 498
in the SKF self-aligning bearing system 39, 41
suitability for SKF housings 40
with locating (stabilizing) rings 41, 51
cast iron
applicable housings 30–34
types 29
cast steel 30–32
centralized lubrication systems 47–49
centre line markings 24
centring recesses
in FNL flanged housings 537, 540

Note: Designation prefixes and suffixes for housings, pillow blocks and units are shown in **bold**.

in FYNT flanged units (SKF ConCentra) 683
circulating oil lubrication
in PD two-bearing housings 567
in SAF pillow blocks 414
in SAW pillow blocks 414
in SBFN felt roll housings 602
in SBPN drying cylinder housings 602
in SDAF pillow blocks 469
in SDM Yankee cylinder housings 602
in SED plummer block housings 336, 342
in SNL 30, 31 & 32 plummer block housings 198, 200, 215–218
in SONL plummer block housings 356, 366–367
circumferential speeds 37–38
clamping bands 647
ConCentra roller bearing units → SKF ConCentra roller bearing units
concentric locking
for inch roller bearing units 696
for metric roller bearing units 663, 664
condensation 37
condition monitoring 52
contact (radial shaft) seals
applicable housings 30–31, 33
for inch roller bearing units 697–699
for metric roller bearing units 667–668
for SAF pillow blocks 389–400
for SAW pillow blocks 389–400
for SDAF pillow blocks 454–462
contact elements
for SAF pillow blocks 400–401
for SAW pillow blocks 400–401
for SDAF pillow blocks 460, 462
contamination
effect on initial grease fills 46
sealing solutions 36, 39
SKF three-barrier solution 39
converters → SKND converter trunnion housings
conveyors
and metric roller bearing units 666
and SBD plummer block housings 485
and SED plummer block housings 331
and THD take-up housings 485
cooling tubes → oil cooling tubes
corrosivity categories 36–37
cover bolts 25
covers 25
cross-located bearing arrangements 562, 564
crushers
and SBD plummer block housings 485
and SED plummer block housings 331
and THD take-up housings 485
cyclic loads 44
cylindrical roller bearings
applicable housings 32
in PD two-bearing housings 555–556, 560–563, 576–579
suitability for SKF housings 40
cylindrical seat mounting
applicable housings 30–32, 34
compared with other shaft-bearing combinations 43
shaft specifications 45
cylindricity 45

D

DD 556, 562
deep groove ball bearings
applicable housings 32
in PD two-bearing housings 556, 560–563, 572–575, 578–579
suitability for SKF housings 40
designation systems
for FNL flanged housings 533–534
for FSDR .. K mill trunnion housings 641
for FYE flanged units (collar-mount) 693
for FYNT flanged units (SKF ConCentra) 661
for FYR(P) flanged units (collar-mount) 693
for PD two-bearing housings 555–556
for SAF pillow blocks 385
for SAW pillow blocks 385
for SBD plummer block housings 487
for SBFN felt roll housings 591
for SBPN drying cylinder housings 591
for SDAF pillow blocks 451
for SDM Yankee cylinder housings 591
for SE plummer block housings 141–142
for SED plummer block housings 333
for SKND converter trunnion housings 625
for SNL 2, 3, 5 & 6 plummer block housings 57–58
for SNL 30, 31 & 32 plummer block housings 191–192
for SNLN plummer block housings 153–154
for SONL plummer block housings 351–352
for SYE pillow block units (SKF ConCentra / collar-mount) 693
for SYNT plummer block units (SKF ConCentra) 661
for SYR pillow block units (SKF ConCentra / collar-mount) 693
for THD take-up housings 487
dimensional tolerances 45
dimples 24
dismounting 42–43
displacement → axial shaft displacement
double-lip seals
applicable housings 32–34
for FNL flanged housings 536, 538
for metric roller bearing units 667–668
for SKND converter trunnion housings 629
for SNL 2, 3, 5 & 6 plummer block housings 66
for SNLN plummer block housings 160
grease escape holes 46
drive side 598–599
drying cylinders
SBPN drying cylinder housings 592, 606–613
SNL ... TURP plummer block housings 200
dual fan housings → PD two-bearing housings
ductile iron (spheroidal graphite cast iron)
applicable housings 30–32, 34
material properties 29

E

E 487, 493, 495, 514–519
electromagnetic clutches 365
end covers (plugs) 25
for FNL flanged housings 535
for inch roller bearing units 697–699
for metric roller bearing units 667–668
for SAF pillow blocks 389–401
for SAW pillow blocks 389–401
for SBD plummer block housings 494
for SBFN felt roll housings 596
for SBPN drying cylinder housings 596
for SDAF pillow blocks 454–461
for SE plummer block housings 142
for SED plummer block housings 337
for SNL 2, 3, 5 & 6 plummer block housings 58, 64–65, 68
for SNL 30, 31 & 32 plummer block housings 192, 196–198
for SNLN plummer block housings 154, 160, 163–164
for SONL plummer block housings 351, 357–359
for THD take-up housings 494
end plates
for PD two-bearing housings 564, 568
for SBD plummer block housings 494
for THD take-up housings 494
end plugs (covers) 25
for FNL flanged housings 535
for inch roller bearing units 697–699
for metric roller bearing units 667–668
for SAF pillow blocks 389–401
for SAW pillow blocks 389–401

Note: Designation prefixes and suffixes for housings, pillow blocks and units are shown in **bold**.

for SBD plummer block housings 494
for SBFN felt roll housings 596
for SBPN drying cylinder housings 596
for SDAF pillow blocks 454–461
for SE plummer block housings 142
for SED plummer block housings 337
for SNL 2, 3, 5 & 6 plummer block housings 58, 64–65, 68
for SNL 30, 31 & 32 plummer block housings 192, 196–198
for SNLN plummer block housings 154, 160, 163–164
for SONL plummer block housings 351, 357–359
for THD take-up housings 494
environmental conditions 36–37
escape holes → grease escape holes
eye bolts 24
load carrying capacity 50

F

F
FYE flanged units (collar-mount) 693
FYNT flanged units (SKF ConCentra) 661, 670
FYR(P) flanged units (collar-mount) 693
SAF pillow blocks 385
SBD plummer block housings 487, 494, 502–525
SBFN felt roll housings 591, 598
SBPN drying cylinder housings 591, 598, 606–613
SDM Yankee cylinder housings 591, 598, 614–621
SE plummer block housings 141
SED plummer block housings 333, 338
SKND converter trunnion housings 625, 626
SNL 2, 3, 5 & 6 plummer block housings 57, 62
SNL 30, 31 & 32 plummer block housings 191, 204
SYE pillow block units (SKF ConCentra / collar-mount) 693
SYNT plummer block units (SKF ConCentra) 661, 670
SYR pillow block units (SKF ConCentra / collar-mount) 693
THD take-up housings 487, 494, 526–529
fans
and metric roller bearing units 666
and SONL plummer block housings 366
felt rolls
SBFN felt roll housings 592
SNL ... TURP plummer block housings 200
felt seals
applicable housings 30–32
for SNL 2, 3, 5 & 6 plummer block housings 64–66, 70, 80
for SNLN plummer block housings 160, 162–164, 166, 176
installation 51
felt strips
applicable housings 30–32
for PD two-bearing housings 558–559
for SNL 2, 3, 5 & 6 plummer block housings 64–66, 70
installation 51
fits 45
flanged housings 23, 25
FNL series 531–551
FYE series (collar-mount) 694–695, 716–717
FYNT series (SKF ConCentra) 662, 688–689
FYR(P) series (collar-mount) 694–695, 718–721
housing selection 27, 32–33
flanges 25
flatness 45
floating bearing arrangements → cross-located bearing arrangements
Flowline → SKF Flowline
flywheels 349
FNL flanged housings 531–551
accessories 544
adapter sleeve mounting 539, 546–551
alignment 536
attachment bolt recommendations 541, 544
axial loads 540
axial shaft displacement 538
bearing types and dimension series 531
breaking loads 540
compared with other non-split housings 32
condition monitoring 544
contamination 538
corrosion protection 536
cover bolts 544
covers 535
design considerations 539–541
designation systems 533–534
designs and variants 535–537
dimension standards 537
features and benefits 536
grease escape holes 537, 542
grease fittings 542
grease guiding system 536, 543
housing selection 32
initial grease fills 542
interchangeability 537
ISO standards 536, 541
load carrying capacity 540
locating (stabilizing) rings 534, 539
locating and non-locating bearing positions 539
lubrication 542–543
materials 536, 538, 540
misalignment 538
mounting 536, 544
operating speed 538, 541
operating temperature 538, 540
ordering information 545
paint specifications 536, 540
plugs 542
product tables 546–551
relubrication 536, 542–543
sealing solutions 533, 538
shaft diameter range 531
shaft specifications 538
shaft-bearing combinations 539
support 540
torque specifications 544
vertical shaft arrangements 538
four-lip seals
applicable housings 30
for SNL 2, 3, 5 & 6 plummer block housings 64–66, 78, 80
for SNLN plummer block housings 160, 162, 173, 176
grease escape holes 46
front side 598–599
FSDR .. K mill trunnion housings 639–657
accessories 653
alignment 643
attachment bolt holes 642
attachment bolt recommendations 649
axial shaft displacement 646, 648
bearing types and dimension series 639
cap bolts 649
compared with other application-specific housings 34
condition monitoring 653
contamination 646
corrosion protection 644
cover bolts 652
covers 642–643, 645
design considerations 648–649
designation systems 641
designs and variants 642–644
dimension standards 644
eye bolts and lifting holes 642, 652
features and benefits 642–643
initial grease fills 650
ISO standards 644, 649, 652, 653
load carrying capacity 648, 652
locating and non-locating bearing positions 648
lubrication 643, 650–651, 653
materials 644, 646, 649
misalignment 646
mounting 652
operating speed 646, 649
operating temperature 646, 649
ordering information 654

Note: Designation prefixes and suffixes for housings, pillow blocks and units are shown in **bold**.

paint specifications 644, 649
product tables 656–657
relubrication 643, 651
sealing solutions 642–643, 645–647, 650–651
shaft diameter range 639
shaft specifications 646, 649
shaft-bearing combinations 648
stops 648, 652
support 648, 652
torque specifications 649, 652
ventilating valves 643, 652
FYE flanged units → inch roller bearing units
FYNT flanged units → metric roller bearing units
FYR(P) flanged units → inch roller bearing units

G

G
SBD plummer block housings 487, 493, 495, 520–525
SED plummer block housings 333
SNL 30, 31 & 32 plummer block housings 191, 200, 202
gap-type seals
applicable housings 34
for SDM Yankee cylinder housings 596–597
garter spring seals → radial shaft (contact) seals
geometrical tolerances 45
grease escape holes 25, 46
grease fills → initial grease fills
grease fitting kits 145, 148
grease fittings 25
caps and tags 48–49
grease guiding system
in FNL flanged housings 536, 543
in SE plummer block housings 146
in SNL 2, 3, 5 & 6 plummer block housings 60, 80
in SNLN plummer block housings 156, 174
grease lubrication 46
applicable housings 30–34
for the SKF three-barrier solution 39
in FNL flanged housings 542–543
in FSDR .. K mill trunnion housings 650–651
in PD two-bearing housings 567, 569
in SAF pillow blocks 400–401, 408–410
in SAW pillow blocks 400–401, 408–410
in SBD plummer block housings 490, 498–501
in SDAF pillow blocks 456–457, 460, 467–468
in SED plummer block housings 342
in SNL 2, 3, 5 & 6 plummer block housings 78–81
in SNL 30, 31 & 32 plummer block housings 197–198, 212–215, 221
in SNLN plummer block housings 173–176
in THD take-up housings 490, 498–501
SKF tools and products 47–49
grease meters 47
grease sampling slots 631
grey cast iron
applicable housings 30–34
material properties 29
grinding mills → mills
grub (set) screws
in inch roller bearing units 696, 704, 707
in metric roller bearing units 662–664, 672, 682
guide rings
for FNL flanged housings 537, 540
for FYNT flanged units (SKF ConCentra) 683

H

H
FYE flanged units (collar-mount) 693, 700
FYR(P) flanged units (collar-mount) 693, 700
SYE pillow block units (SKF ConCentra / collar-mount) 693, 700
SYR pillow block units (SKF ConCentra / collar-mount) 693, 700
high-temperature seals
for SAF pillow blocks 401
for SAW pillow blocks 401
for SDAF pillow blocks 462
for SNL 2, 3, 5 & 6 plummer block housings 70
for SNLN plummer block housings 166
housing bodies 25
housing bore 25
housing seats 25
housings
assortment 27–34, 36
design considerations 40–45
function 22
selection process 35
terminology 22–26
humidity
under operating conditions 37
under storage conditions 52
HYDROCAM hydraulic bolt tensioners 50

I

imbalance 44
inch housings
FYE flanged units (collar-mount) 694–695, 716–717
FYR(P) flanged units (collar-mount) 694–695, 718–721
SAF pillow blocks 383–447
SAW pillow blocks 383–447
SDAF pillow blocks 449–483
SYE pillow block units (SKF ConCentra / collar-mount) 694, 708–715
SYR pillow block units (SKF ConCentra / collar-mount) 694, 708–715
inch roller bearing units 690–721
accessories 707
attachment bolt holes 696
attachment bolt recommendations 705, 708–721
axial loads 703–704
axial shaft displacement 699–700
bearing life 700–701
bearing types and dimension series 691
condition monitoring 707
contamination 699
corrosion protection 697
design considerations 700–705
designation system 693
designs and variants 694–697
features and benefits 696–697
flanged housings (piloted) 694–695, 718–721
flanged housings (round) 694–695, 718–721
flanged housings (square) 694–695, 716–717
grease fittings 706, 707
initial grease fills 706
internal clearance 704
ISO standards 697, 707
load carrying capacity 703–704
locating and non-locating bearing positions 700
lubrication 706–707
markings 696
materials 697, 699, 705
misalignment 699
mounting 696, 707
operating speed 699, 705
operating temperature 699, 705

Note: Designation prefixes and suffixes for housings, pillow blocks and units are shown in **bold**.

ordering information 707
paint specifications 697, 705
pillow block housings (four-bolt) 694, 714–715
pillow block housings (two-bolt) 694, 708–713
product tables 708–721
relubrication 706–707
ribs 696
safe loads 702–703
sealing solutions 697–699
set (grub) screws 696, 704, 707
shaft diameter range 691
shaft specifications 705
shaft-bearing combinations 700
stiffness 696
support 703
torque specifications 704
vertical shaft arrangements 699
inch shafts (for metric housings)
for SNL 2, 3, 5 & 6 plummer block housings 58, 100–118
for SNL 30, 31 & 32 plummer block housings 198, 260–301
inch thread connections
for FSDR .. K mill trunnion housings 644
for SBFN felt roll housings 594, 604
for SBPN drying cylinder housings 594, 604, 610–613
for SDM Yankee cylinder housings 594, 604, 618–621
induced loads 41
initial grease fills 46
for the SKF three-barrier solution 39
inspection 52
installation → mounting
interchangeability
between housings and bearing units 35
between SKF and non-SKF plummer block housings 30–31
ISO standards
for corrosivity categories 36–37
for plummer (pillow) block housings 30–31
for support surfaces 45

K

K 641, 648

L

L
FYNT flanged units (SKF ConCentra) 661, 670
SBD plummer block housings 487, 494, 502–525
SED plummer block housings 333, 338
SKND converter trunnion housings 625, 626, 631
SNL 30, 31 & 32 plummer block housings 191, 204
SYNT plummer block units (SKF ConCentra) 661, 670
THD take-up housings 487, 494, 526–529
labyrinth seals
applicable housings 30–34
for inch roller bearing units 697–699
for metric roller bearing units 667–668
for SBD plummer block housings 490–491
for SDAF pillow blocks 454–460, 462
for SNL 2, 3, 5 & 6 plummer block housings 64–66
for SNL 30, 31 & 32 plummer block housings 196–198, 200, 212
for SNLN plummer block housings 160, 163–164, 173
for SONL plummer block housings 356–357, 362, 364
for THD take-up housings 490–491
for the SKF three-barrier solution 39
lip seals
applicable housings 30–34
grease escape holes 46
load carrying capacity 44
locating (stabilizing) rings 25
for CARB toroidal roller bearings 41, 51
in locating/non-locating bearing arrangements 40
mounting considerations 50–51
locating bearing position 40–41
locating/non-locating bearing arrangements 40
lock nuts 25
lock washers 24
locking collar method 696
locking collars 696, 707
locking methods
locking collar method 696
per roller bearing unit series 33
SKF ConCentra (inch) 696
SKF ConCentra (metric) 663
low friction seals 536, 538
lubrication 46
per housing series 30–34
SKF tools and products 47–49

M

machined recesses → centring recesses
magnetic plugs 354, 365
materials 29
per housing series 30–34
metric roller bearing units (SKF ConCentra) 659–689
accessories 684
applications 666
attachment bolt holes 662, 664
attachment bolt recommendations 674
axial loads 672, 673, 684
axial shaft displacement 668, 670
bearing life 670
bearing types and dimension series 659
breaking loads 670–672
compared with other roller bearing units 33
condition monitoring 684
corrosion protection 665
design considerations 670–674
designation systems 661
designs and variants 662–666
dimension standards 665
dimples 664
dowel pins and holes 673, 682–683
flanged housings 662, 688–689
grub (set) screws 662–664, 672, 682
guide rings 683
initial grease fills 675
interchangeability 665
internal clearance 663, 673
ISO standards 665, 673, 674
load carrying capacity 670–673, 683
locating and non-locating bearing positions 670
lubrication 675–681, 684
markings 664
mounting 663, 664, 682–683
ordering information 685
paint specifications 665, 673
plummer block housings 662, 686–687
product tables 686–689
relubrication 675–679
relubrication-free units 666, 675, 680–681
safety factors 670
sealing solutions 667–669
shaft diameter range 659
shaft end lengths 669
shaft specifications 673
shaft-bearing combinations 670
stiffness 664
torque specifications 674, 682
vertical shaft arrangements 668, 678
mills
FSDR .. K mill trunnion housings 639–657
SED plummer block housings 331
misalignment
considerations for bearing selection 40–41

Note: Designation prefixes and suffixes for housings, pillow blocks and units are shown in **bold**.

considerations for seal selection 36
mounting 50–51
for various shaft-bearing combinations 42–43
from the end of a shaft 27
mounting collars
for inch roller bearing units 696, 707
for metric roller bearing units 662–663
MS1
SE plummer block housings 141
SNL 2, 3, 5 & 6 plummer block housings 57, 62–63
SNLN plummer block housings 153, 158–159
MS2
SE plummer block housings 141
SNL 2, 3, 5 & 6 plummer block housings 57, 63
SNLN plummer block housings 153, 158–159
MultiPoint → SKF MultiPoint
multi-seals 30–31

N

N
inch roller bearing units 693, 694, 708–713
N9
FSDR .. K mill trunnion housings 641, 644
SBFN felt roll housings 591, 594, 604
SBPN drying cylinder housings 591, 594, 604, 610–613
SDM Yankee cylinder housings 591, 594, 604, 618–621
non-locating bearing position 40–41
non-split housings 23
FNL flanged housings 535
housing selection 27, 32
PD two-bearing housings 557
SBD plummer block housings 488
SBFN felt roll housings 592
SBPN drying cylinder housings 592
THD take-up housings 488

O

oil bath lubrication
in PD two-bearing housings 567
in SAF pillow blocks 411–413
in SAW pillow blocks 411
in SDAF pillow blocks 468
in SNL 30, 31 & 32 plummer block housings 198, 215–217
in SONL plummer block housings 356, 364–367
inspection 52
oil circulating units 366
oil cooling tubes 352, 365–366
oil inlet holes 24
oil level gauges 24, 26
for SONL plummer block housings 354, 362, 364–365
oil levellers 48
oil levels
in SAF pillow blocks 412–413
in SAW pillow blocks 411
in SNL 30, 31 & 32 plummer block housings 216–218
in SONL plummer block housings 356, 364–365, 367
oil lubrication
applicable housings 30–34
in PD two-bearing housings 567
in SAF pillow blocks 411–414
in SAW pillow blocks 411–414
in SBFN felt roll housings 602
in SBPN drying cylinder housings 602
in SDAF pillow blocks 456–457, 468–469
in SDM Yankee cylinder housings 602
in SED plummer block housings 342
in SNL 2, 3, 5 & 6 plummer block housings 64
in SNL 30, 31 & 32 plummer block housings 197–198, 215–218
in SONL plummer block housings 356, 364–367
oil outlet holes 24
oil pick-up rings 352, 356, 364–365
oil reservoirs → oil sumps
oil seals
for SNL 2, 3, 5 & 6 plummer block housings 64
for SNL 30, 31 & 32 plummer block housings 198, 215
oil sumps
in SAF pillow blocks 387, 410
in SAW pillow blocks 387, 410
in SDAF pillow blocks 468–469
in SNL 2, 3, 5 & 6 plummer block housings 64
in SONL plummer block housings 354, 356, 364
one-piece housings → non-split housings
operating speed
conversion table 37–38
effect on initial grease fills 46
ordering
FNL flanged housings 545
FSDR .. K mill trunnion housings 654
FYE flanged units (collar-mount) 707
FYNT flanged units (SKF ConCentra) 685
FYR(P) flanged units (collar-mount) 707
PD two-bearing housings 570
SAF pillow blocks 416
SAW pillow blocks 416
SBD plummer block housings 501
SBFN felt roll housings 605
SBPN drying cylinder housings 605
SDAF pillow blocks 470
SDM Yankee cylinder housings 605
SE plummer block housings 149
SED plummer block housings 343
SKND converter trunnion housings 633
SNL 2, 3, 5 & 6 plummer block housings 84
SNL 30, 31 & 32 plummer block housings 221
SNLN plummer block housings 179
SONL plummer block housings 369
SYE pillow block units (SKF ConCentra / collar-mount) 707
SYNT plummer block units (SKF ConCentra) 685
SYR pillow block units (SKF ConCentra / collar-mount) 707
THD take-up housings 501
O-rings
for PD two-bearing housings 562
for SAF pillow blocks 392–398, 400–401
for SAW pillow blocks 392–398, 400–401
for SDAF pillow blocks 454–455, 458, 462
for SED plummer block housings 349
for SONL plummer block housings 356, 359
outer ring rotation 678
overhanging loads 28

P

P 533, 537
P..
FSDR .. K mill trunnion housings 641, 644
SBFN felt roll housings 591, 594
SBPN drying cylinder housings 591, 594
SDM Yankee cylinder housings 591, 594
SED plummer block housings 333
painting 36
paper machines
SBFN felt roll housings 592
SBPN drying cylinder housings 592, 606–613
SDM Yankee cylinder housings 592–593, 614–621
SNL ... TURP plummer block housings 200
SONL plummer block housings 349
PD two-bearing housings 552–587
accessories 569
attachment bolt holes 557
attachment bolt recommendations 566
axial loads 560, 562, 564, 568
bearing arrangements 560–563
bearing types and dimension series 553, 555–556

Note: Designation prefixes and suffixes for housings, pillow blocks and units are shown in **bold**.

compared with other non-split housings 32
condition monitoring 569
contamination 559
corrosion protection 557
cover bolts 557, 566
design considerations 560–566
designation systems 555–556
designs and variants 557–558
dimension standards 557
eye bolts 557, 575–579
features and benefits 557
flinger rings 567
grease fittings 567
housing selection 28
initial grease fills 567
ISO standards 557, 566, 568
load carrying capacity 557, 560, 562, 564
lubrication 558, 567, 569
markings 568
materials 557, 559, 564
misalignment 557
mounting 568
operating speed 559, 564
operating temperature 559, 564
ordering information 570
paint specifications 557, 564
PDN series 557, 560–562, 568, 572–575
PDP series 557, 560–561, 576–577
PDR series 557, 562, 578–579
product tables 572–587
sealing solutions 558–559
shaft specifications 559, 564–565, 580–587
shaft-bearing combinations 560
torque specifications 566
units 556, 567, 568, 432–439
vertical shaft arrangements 558, 567
PD two-bearing units 556, 567, 568, 432–439
peripheral speeds → circumferential speeds
permissible speed → operating speed
perpendicularity 45
pick-up rings → oil pick-up rings
pillow (plummer) block housings 24–25
FSDR .. K series 639–657
SAF series 383–447
SAW series 383–447
SBD series 485–525
SDAF series 449–483
SE series 139–149
SED series 331–347
SKND series 623–637
SNL 2, 3, 5 & 6 series 55–137
SNL 30, 31 & 32 series 189–329
SNLN series 151–187
SONL series 349–381
split versus non-split 27
SYE series (SKF ConCentra / collar-mount) 694, 708–715
SYNT series (SKF ConCentra) 662, 686–687
SYR series (SKF ConCentra / collar-mount) 694, 708–715
plain shafts 42
plugs 25
plummer (pillow) block housings 24–25
FSDR .. K series 639–657
SAF series 383–447
SAW series 383–447
SBD series 485–525
SDAF series 449–483
SE series 139–149
SED series 331–347
SKND series 623–637
SNL 2, 3, 5 & 6 series 55–137
SNL 30, 31 & 32 series 189–329
SNLN series 151–187
SONL series 349–381
split versus non-split 27
SYE series (SKF ConCentra / collar-mount) 694, 708–715
SYNT series (SKF ConCentra) 662, 686–687
SYR series (SKF ConCentra / collar-mount) 694, 708–715
pollution 37
Pop Release units → SKF ConCentra roller bearing units
PosiTrac (Plus) seals
for SAF pillow blocks 389–390, 400
for SAW pillow blocks 389–390, 400
for SDAF pillow blocks 454–456, 460
power generators 349
pry slots
in SAF pillow blocks 387
in SAW pillow blocks 387
in SE plummer block housings 145
pumps 366

R

RA
SBFN felt roll housings 591, 598
SBPN drying cylinder housings 591, 598, 606–613
SDM Yankee cylinder housings 591, 598, 614–621
SONL plummer block housings 351, 356, 367
radial shaft (contact) seals
applicable housings 30–31, 33
for inch roller bearing units 697–699
for metric roller bearing units 667–668
for SAF pillow blocks 389–400
for SAW pillow blocks 389–400
for SDAF pillow blocks 454–462
ready-to-mount
inch roller bearing units 696
metric roller bearing units 664
PD two-bearing units 557
recesses → centring recesses
relubrication 46
relubrication holes 26
relubrication-free 666, 675, 680–681
replacement 30–34
rigid bearings 28, 40
benefits for PD two-bearing housings 557
rocker housings 593, 599
roller bearing units 23
equivalent housing series 35
FYE flanged units (collar-mount) 694–695, 716–717
FYNT flanged units (SKF ConCentra) 662, 688–689
FYR(P) flanged units (collar-mount) 694–695, 718–721
housing selection 28, 33
storage 52
SYE pillow block units (SKF ConCentra / collar-mount) 694, 708–715
SYNT plummer block units (SKF ConCentra) 662, 686–687
SYR pillow block units (SKF ConCentra / collar-mount) 694, 708–715
roller beds 485
rope sheaves 595
rotating outer ring load
on metric roller bearing units 678
on SNL 2, 3, 5 & 6 plummer block housings 64
on SNL 30, 31 & 32 plummer block housings 196
on SNLN plummer block housings 158
on SONL plummer block housings 356
rotational speeds 37–38
RT 333, 336, 342
runout 45

S

S
SE plummer block housings 141
SNL 2, 3, 5 & 6 plummer block housings 57, 63, 74
SNLN plummer block housings 153, 158–159
SAF pillow blocks 383–447
accessories 415

Note: Designation prefixes and suffixes for housings, pillow blocks and units are shown in **bold**.

adapter sleeve mounting 402, 418–433
alignment 387
attachment bolt holes 386
attachment bolt recommendations 408
axial loads 403, 407
axial shaft displacement 390–391
bearing types and dimension series 383, 385, 401
cap bolts 403–406
compared with other split housings 31
condition monitoring 388, 415
contamination 390–391, 400–401, 408
corrosion protection 387
cylindrical seat mounting 402, 434–447
design considerations 402–408
designation system 385
designs and variants 386–388
dimples 407, 410, 415
dowel pins 387, 407
features and benefits 387
grease fittings 385
initial grease fills 408–409
interchangeability 387
ISO standards 387, 415
load carrying capacity 403–407
locating and non-locating bearing positions 403
lubrication 387, 390–391, 408–414, 415
markings 387
materials 387–388, 390–391, 407
misalignment 390–391
mounting 387, 414–415
operating speed 390–391, 393–399, 401, 407
operating temperature 390–391, 401, 407
ordering information 416
paint specifications 387, 407
plugs 410
product tables 418–447
relubrication 390, 410
safe loads 403–406
safety factors 403
sealing solutions 389–401
shaft diameter range 383
shaft end lengths 418–433
shaft specifications 408
shaft-bearing combinations 402
stabilizing (locating) rings 403
stops 407, 414–415
support 407, 414
torque specifications 404–406
vertical shaft arrangements 390–391
safe loads 44
safety factors 44
SAW pillow blocks 383–447
accessories 415
adapter sleeve mounting 402, 422–429
alignment 387
attachment bolt holes 386
attachment bolt recommendations 408
axial loads 403, 407
axial shaft displacement 386, 390–391
bearing types and dimension series 383, 385, 401
cap bolts 403, 407
compared with other split housings 31
condition monitoring 388, 415
contamination 390–391, 400–401, 408
corrosion protection 387
cylindrical seat mounting 402, 436–443
design considerations 402–408
designation system 385
designs and variants 386–388
dimples 407, 410, 415
dowel pins 387, 407
features and benefits 387
grease fittings 385
initial grease fills 408–409
interchangeability 387
ISO standards 387, 415
load carrying capacity 403, 407
locating and non-locating bearing positions 403
lubrication 387, 390–391, 408–414, 415
markings 387
materials 387–388, 390–391, 407
misalignment 390–391
mounting 387, 414–415
operating speed 390–391, 393–399, 401, 407
operating temperature 390–391, 401, 407
ordering information 416
paint specifications 387, 407
plugs 410
product tables 422–429, 436–444
relubrication 390, 410
safe loads 403, 407
safety factors 403
sealing solutions 389–401
shaft diameter range 383
shaft end lengths 422–429
shaft specifications 408
shaft-bearing combinations 402
stabilizing (locating) rings 403
stops 407, 414–415
support 407, 414
torque specifications 407
vertical shaft arrangements 390–391
SBD plummer block housings 485–525
accessories 501
adapter rings 487, 490–491, 501
adapter sleeve mounting 493, 502–513
alignment 489
applications 485
attachment bolt holes 488
attachment bolt recommendations 495, 500
axial shaft displacement 491, 494
bearing types and dimension series 485, 492
breaking loads 494, 496–497
compared with other non-split housings 32
condition monitoring 501
contamination 491–492, 498
corrosion protection 489
cover bolts 488, 500
covers 488, 494
cylindrical seat mounting 493, 514–525
design considerations 493–497
designation systems 487
designs and variants 488–490
dimension standards 489
eye bolts 489, 503–525
features and benefits 489
grease fittings 498
initial grease fills 498–499
load carrying capacity 485, 494–497
locating and non-locating bearing positions 494
lubrication 490, 498–501
materials 489, 491, 495
misalignment 491
mounting 501
operating speed 491, 495, 498
operating temperature 491, 495, 498
ordering information 501
paint specifications 489, 495
product tables 502–525
ribs 488
safety factors 494
sealing solutions 490–492
shaft diameter range 485
shaft specifications 491, 495
shaft-bearing combinations 493–494
stiffness 489
stops 489, 494–495
support 494–495
torque specifications 491, 500
withdrawal sleeve mounting 490
SBF felt roll housings 593, 599
SBFN felt roll housings 589–605

Note: Designation prefixes and suffixes for housings, pillow blocks and units are shown in **bold**.

attachment bolt holes 592, 595
attachment bolt recommendations 601
bearing types and dimension series 589
compared with other application-specific housings 34
condition monitoring 604
contamination 593, 597
corrosion protection 593
design considerations 598–601
designation system 591
designs and variants 592–595
dimension standards 593
inch thread connections 594, 604
load carrying capacity 598
locating and non-locating bearing positions 598–599
lubrication 602
materials 593
misalignment 597
mounting 592–593, 595, 600, 603
operating speed 600
operating temperature 597, 600
ordering information 605
paint specifications 593, 594, 600
sealing solutions 593, 596–597
shaft diameter range 589
shaft specifications 597, 600
shaft-bearing combinations 598
wet section 594–595
SBP drying cylinder housings 593, 599
SBPN drying cylinder housings 589–613
attachment bolt holes 592
attachment bolt recommendations 601
bearing types and dimension series 589
compared with other application-specific housings 34
condition monitoring 604
contamination 593, 597
corrosion protection 593
design considerations 598–601
designation system 591
designs and variants 592–595
dimension standards 593
inch thread connections 594, 604, 610–613
load carrying capacity 598
locating and non-locating bearing positions 598–599
lubrication 602
materials 593
misalignment 597
mounting 592, 600, 603
operating speed 600
operating temperature 597, 600
ordering information 605
paint specifications 593, 594, 600
product tables 606–613
rope sheaves 595
sealing solutions 593, 596–597
shaft diameter range 589
shaft specifications 597, 600
shaft-bearing combinations 598
steam joint connections 594, 605–613
torque specifications 601
SD plummer block housings 31
SDAF pillow blocks 449–483
adapter sleeve mounting 462–463, 472–473, 476–479
attachment bolt holes 452, 453
attachment bolt recommendations 466
axial loads 464–465
axial shaft displacement 456–457
bearing types and dimension series 449, 451
cap bolts 464–465, 470
compared with other split housings 31
condition monitoring 470
contamination 456–457, 460, 467
corrosion protection 453
cylindrical seat mounting 462–463, 474–475, 480–483
design considerations 462–466
designation system 451
designs and variants 452–453
dowel pins and holes 465
eye bolts 452
features and benefits 452
grease fittings 451
initial grease fills 467
interchangeability 452
ISO standards 453
load carrying capacity 452, 463–465
locating and non-locating bearing positions 463
lubrication 456–457, 467–469
markings 452
materials 453, 456–457, 466
misalignment 456–457
mounting 470
operating speed 456–460, 462, 466
operating temperature 456–457, 462, 466, 469
ordering information 470
paint specifications 453, 466
plugs 468
product tables 472–483
safe loads 464–465
sealing solutions 454–462
shaft diameter range 449
shaft specifications 466
shaft-bearing combinations 462–463
stabilizing (locating) rings 463
stiffness 452
stops 465, 470
support 465, 470
torque specifications 464–465
vertical shaft arrangements 456–457
SDD plummer block housings 31
SDM Yankee cylinder housings 589–605, 614–621
attachment bolt holes 592
attachment bolt recommendations 601
bearing types and dimension series 589
cap bolts 601
compared with other application-specific housings 34
condition monitoring 604
contamination 597
corrosion protection 593
design considerations 598–601
designation system 591
designs and variants 592–595
dimension standards 593
inch thread connections 594, 604, 618–621
load carrying capacity 598–599
locating and non-locating bearing positions 598–599
lubrication 602
materials 593
misalignment 597
mounting 592, 600, 603
operating speed 600
operating temperature 597, 600
ordering information 605
paint specifications 593, 594, 600
product tables 614–621
rockers 593, 599
sealing solutions 593, 596–597
shaft diameter range 589
shaft specifications 597, 600
shaft-bearing combinations 598
steam joint connections 594
torque specifications 601
SE plummer block housings 139–149
attachment bolt holes 62–63, 143, 144
attachment bolt recommendations 62, 77
bearing types and dimension series 139
breaking loads 75
compared with other split housings 30
corrosion protection 147, 148
design 143–148
design considerations 148
designation systems 141–142
dimension standards 148
dimples 145

Note: Designation prefixes and suffixes for housings, pillow blocks and units are shown in **bold**.

dismounting 145
dowel pins and holes 82, 145
features and benefits 144–147
grease escape holes 81, 147
grease fitting kits 145, 148
grease guiding system 146
initial grease fills 78, 145–146
interchangeability 144, 148
ISO standards 147, 148
locating (stabilizing) rings 142
lubrication 146
markings 144–146
materials 148
mounting 145
ordering information 149
paint specifications 148
product tables 86–137
ribs 144
safe loads 76
seal groove dimensions 68
sealing solutions 142
shaft end lengths 69
stiffness 144
torque specifications 62, 77
seal counterfaces
accuracy requirements 45
repair possibilities 51
seal grooves 25
seal kits 351, 358–359
sealed bearings
in SAF pillow blocks 401, 408
in SAW pillow blocks 401, 408
in SBD plummer block housings 492
in SNL 2, 3, 5 & 6 plummer block housings 68, 78
in SNL 30, 31 & 32 plummer block housings 200, 213
in SNLN plummer block housings 164, 173
in THD take-up housings 492
in the SKF three-barrier solution 39
sealing solutions 36–39
installation 51
per housing series 30–34
SKF three-barrier solution 39
SED plummer block housings 331–347
accessories 343
alignment 334–335, 342
applications 331
attachment bolt holes 334, 336
attachment bolt recommendations 340–341
compared with other split housings 31
condition monitoring 343
corrosion protection 336
designation systems 333
designs and variants 334–336
dimension standards 336
eye bolts and lifting holes 334–335, 342
features and benefits 334–335
grease/oil escape holes 334–335, 342
grease fittings 342
initial grease fills 342
ISO standards 336, 339, 340, 342
load carrying capacity 338–339, 342
locating and non-locating bearing positions 338
lubrication 342
materials 336, 337, 340
mounting 334, 342–343
operating speed 337, 340
operating temperature 337, 340
ordering information 343
paint specifications 336, 340
product tables 344–347
relubrication 337, 342
sealing solutions 337
shaft specifications 337
shaft-bearing combinations 338
stiffness 334–335
stops 339, 342
support 339, 342
torque specifications 339, 340, 342
self-aligning ball bearings
applicable housings 30–34
in FNL flanged housings 543, 546–551
in SAF pillow blocks 410, 414, 418–421, 434–435
in SNL 2, 3, 5 & 6 plummer block housings 69, 80, 86–137
in SONL plummer block housings 356, 367, 370–381
suitability for SKF housings 40
self-aligning bearing system → SKF self-aligning bearing system
sensor positions → condition monitoring
serial numbers
on SAF pillow blocks 387
on SAW pillow blocks 387
on SE plummer block housings 144
on SNL 2, 3, 5 & 6 plummer block housings 60–61
on SNL 30, 31 & 32 plummer block housings 194
on SNLN plummer block housings 157
on SONL plummer block housings 355
set (grub) screws
in inch roller bearing units 696, 704, 707
in metric roller bearing units 662–664, 672, 682
shaft abutments 26
accuracy requirements 45
shaft arrangements 25–26
shaft diameter 24
per housing series 30–34
shaft displacement → axial shaft displacement
shaft roughness → surface roughness
shaft sleeves 26
for FSDR .. K mill trunnion housings 645
for PD two-bearing housings 570
for SONL plummer block housings 356–359, 360, 362, 364
in shaft-bearing combinations 42–43
shaft-bearing combinations
comparison table 42–43
per housing series 30–34
shafts 24
specifications 45
shims 50–51
SKF ConCentra locking method
for inch roller bearing units 696
for metric roller bearing units 663
SKF ConCentra roller bearing units
FYNT flanged units (metric) 662, 688–689
SYE .. N pillow block units (inch) 694, 708–715
SYNT plummer block units (metric) 662, 686–687
SYR .. N pillow block units (inch) 694, 708–715
SKF Flowline 48–49, 366
SKF Housing Select 35
SKF Multilube 48–49
SKF MultiPoint 47
SKF self-aligning bearing system 41
and the SKF three-barrier solution 39
SKF SPEEDI-SLEEVE 51
SKF SYSTEM 24 47
SKF three-barrier solution 39
SKND converter trunnion housings 623–637
accessories 632–633
alignment 628
attachment bolt holes 626
axial loads 623, 632
axial shaft displacement 630, 632
bearing types and dimension series 623, 626
cap bolts 628
compared with other application-specific housings 34
condition monitoring 632–633
contamination 628, 629, 631
corrosion protection 629
covers 626
design considerations 630
designation systems 625
designs and variants 626–629
features and benefits 628
grease sampling slots 631

Note: Designation prefixes and suffixes for housings, pillow blocks and units are shown in **bold**.

initial grease fills 631
ISO standards 629
load carrying capacity 630
locating and non-locating bearing positions 626
lubrication 631
materials 629
mounting 628, 632
operating temperature 630
ordering information 633
paint specifications 629
product table 634–637
sealing solutions 629
stops 632
support 632
sleeve mounting
accuracy requirements 45
applicable housings 30–32, 34
axial load carrying capacity 44
compared with other shaft-bearing combinations 42–43
shaft specifications 45
slippage 44
SM-100 Oil Circulating Unit 366
SN
SNL 2, 3, 5 & 6 plummer block housings 57
SNL 30, 31 & 32 plummer block housings 191
SNLN plummer block housings 153
SN plummer block housings 30
SNA plummer block housings 30
SNH plummer block housings 30
SNL 2, 3, 5 & 6 plummer block housings 55–137
accessories 60–61, 84
adapter sleeve mounting (inch shafts) 72–73, 100–119
adapter sleeve mounting (metric shafts) 72–73, 86–99
alignment 60
attachment bolt holes 59–60, 62–63
attachment bolt recommendations 62, 77
axial loads 74
axial shaft displacement 65, 70
bearing types and dimension series 55, 68
breaking loads 74–75
cap bolts 74, 77
compared with other split housings 30
condition monitoring 60–61, 83
contamination 65–66, 68, 78
corrosion protection 61
cylindrical seat mounting 72–73, 120–137
design considerations 72–77
designation systems 57–58
designs and variants 59–64
dimension standards 61
dimples 60–61, 62–63, 78–79
dowel pins and holes 60–61, 62, 74, 82
equivalent roller bearing units 35
eye bolts 60
features and benefits 60–61
grease escape holes 80–81
grease fittings 57, 78–79
heat dissipation 60
initial grease fills 78
interchangeability 60, 61
ISO standards 61, 77, 83
load carrying capacity 73–77, 82
locating (stabilizing) rings 58, 72
locating and non-locating bearing positions 72
lubrication 64, 78–81, 84
markings 60–61
materials 61, 62, 65, 74
misalignment 65–66, 70
mounting 60–61, 66, 82
operating speed 65–66, 70, 74, 78
operating temperature 65–66, 68, 70, 74
ordering information 84
paint specifications 61, 74
plugs 78–79
product tables 86–137
relubrication 60, 78–81
ribs 60
safe loads 74, 76
safety factors 74
seal groove dimensions 68
sealing solutions 58, 64–71, 80–81
shaft diameter range 55
shaft end lengths 69
shaft specifications 65, 69, 70
shaft-bearing combinations 72–73
splash plates 80–81
stiffness 60
stops 74, 82
support 74, 82
support rings 66–67
torque specifications 62, 77
vertical shaft arrangements 65–66
vibration 64
withdrawal sleeve mounting 72–73
SNL 30, 31 & 32 plummer block housings 189–329
accessories 194–195, 221
adapter sleeve mounting (inch shafts) 203, 260–301
adapter sleeve mounting (metric shafts) 203, 222–259
alignment 194–195
attachment bolt holes 193–194
attachment bolt recommendations 210–212, 212
axial shaft displacement 197–198, 200
bearing types and dimension series 189
breaking loads 204–206
cap bolts 210–211
compared with other split housings 31
condition monitoring 194–195, 220
contamination 197–198, 200, 212
cylindrical seat mounting 203, 302–329
design considerations 203–212
designation systems 191–192
designs and variants 193–196
dimension standards 195
dimples 194–195, 213
dowel pins and holes 195, 204, 219
eye bolts 194, 223–329
features and benefits 194
grease escape holes 214–215
grease fittings 213
heat dissipation 194
initial grease fills 212–213
interchangeability 194, 195
ISO standards 195, 212, 220
load carrying capacity 204–211, 219
locating (stabilizing) rings 192, 204
locating and non-locating bearing positions 204
lubrication 197–198, 212–218
markings 194–195, 212
materials 195–196, 197, 212
misalignment 197
mounting 194, 219
operating speed 197, 212
operating temperature 197, 212
ordering information 221
paint specifications 195, 212
plugs 213
product tables 222–329
relubrication 197, 212, 213–214
ribs 194
safe loads 204, 207–209
safety factors 204
seal groove dimensions 201–202
sealing solutions 196–202
shaft diameter range 189
shaft end lengths 199
shaft specifications 197, 199
shaft-bearing combinations 203
stiffness 194
stops 204, 219
support 204, 219
torque specifications 210–211
vertical shaft arrangements 197

Note: Designation prefixes and suffixes for housings, pillow blocks and units are shown in **bold**.

vibration 196
withdrawal sleeve mounting 203
SNLN plummer block housings 151–187
accessories 157, 178
adapter sleeve mounting 168–169, 180–183
alignment 157
attachment bolt holes 155–156, 158–159
attachment bolt recommendations 171–172
axial loads 171
axial shaft displacement 162–163, 166
bearing types and dimension series 151, 164
breaking loads 170–171
cap bolts 171–172
compared with other split housings 30
condition monitoring 157, 178
contamination 162–163, 164, 173
corrosion protection 158
cylindrical seat mounting 168–169, 184–187
design considerations 168–172
designation systems 153–154
designs and variants 155–159
dimension standards 158
dimples 157, 174–175, 177
dowel pins and holes 157, 171, 177
eye bolts 157
grease escape holes 176
grease fittings 153, 174–175
heat dissipation 156
initial grease fills 173
interchangeability 157, 158
ISO standards 158, 172, 178
load carrying capacity 170–172, 177
locating (stabilizing) rings 154, 168
locating and non-locating bearing positions 168
lubrication 173–176, 178
markings 157
materials 158, 162–163
misalignment 162–163, 166
mounting 157, 177
operating speed 162–164, 166, 172, 173
operating temperature 162–164, 166, 172
ordering information 179
paint specifications 158, 172
plugs 174–175
product tables 180–187
relubrication 156, 174–176
ribs 156
seal groove dimensions 167
sealing solutions 154, 160–167, 176
shaft diameter range 151
shaft end lengths 165
shaft specifications 162–163, 165, 166
shaft-bearing combinations 168–169
spacer sleeves 168
splash plates 176
stiffness 156
stops 171, 177
support rings 161
torque specifications 171
vertical shaft arrangements 161, 162–163
vibration 158
withdrawal sleeve mounting 168–169
SOFN plummer block housings 31
SONL plummer block housings 349–381
accessories 369
adapter sleeve mounting (inch shafts) 356, 360, 362, 374–377
adapter sleeve mounting (metric shafts) 356, 360, 362, 370–373
alignment 354
attachment bolt holes 353
attachment bolt recommendations 363
axial loads 362
axial shaft displacement 357
bearing types and dimension series 349
breaking loads 361–362
cap bolts 362–363
compared with other split housings 31
condition monitoring 368–369
contamination 365
corrosion protection 355
cylindrical seat mounting 356, 360, 378–381
design considerations 360–363
designation systems 351–352
designs and variants 353–356
dimension standards 355
dimples 354
dowel pins and holes 354, 362, 368
eye bolts 354, 371–377
features and benefits 354–355
interchangeability 355
ISO standards 355, 363, 368–369
load carrying capacity 361–362, 368
locating (stabilizing) rings 352, 360
locating and non-locating bearing positions 360
lubrication 356, 364–367
magnetic plugs 354, 365
markings 355, 364
materials 355–356, 357, 362
misalignment 357
mounting 354, 368
oil fills 364
oil inlet holes 367
oil level 356, 364–365, 367
oil level gauges 352, 354, 362, 364–365
oil outlet holes 365, 367
operating speed 362, 366
operating temperature 354, 356, 357, 362
ordering information 369
paint specifications 355, 362
product tables 370–381
sealing solutions 351, 356–359
shaft diameter range 349
shaft specifications 357, 362
shaft-bearing combinations 360
start-up 364–365
stops 362, 368
torque specifications 363
spacer sleeves 26
axial location 42–43
spacing washers 534, 539
speed → operating speed
spherical roller bearings
applicable housings 30–34
in FNL flanged housings 539, 543, 546–551
in PD two-bearing housings 556, 562–563
in SAF pillow blocks 410, 414, 422–429, 436–443
in SAW pillow blocks 410, 414, 422–429, 436–443
in SBD plummer block housings 492, 498, 502–525
in SBFN felt roll housings 592, 598–599
in SBPN drying cylinder housings 592, 598–599, 606–621
in SDAF pillow blocks 468, 472–483
in SDM Yankee cylinder housings 592, 598–599, 606–621
in SKND converter trunnion housings 626–627, 634–637
in SNL 2, 3, 5 & 6 plummer block housings 80, 86–137
in SNLN plummer block housings 174, 180–187
in SONL plummer block housings 356, 367, 370–381
in THD take-up housings 492, 498, 526–529
in the SKF self-aligning bearing system 41
relubrication via the outer ring 46
suitability for SKF housings 40
spheroidal graphite cast iron (ductile iron)
applicable housings 30–32, 34
material properties 29
split housings 23
FSDR .. K mill trunnion housings 642
housing selection 27, 30–31
load carrying capacity 44
SAF pillow blocks 386
SAW pillow blocks 386
SDAF pillow blocks 452
SDM Yankee cylinder housings 592

Note: Designation prefixes and suffixes for housings, pillow blocks and units are shown in **bold**.

SE plummer block housings 143
SED plummer block housings 334
SKND converter trunnion housings 626
SNL 2, 3, 5 & 6 plummer block housings 59
SNL 30, 31 & 32 plummer block housings 193
SNLN plummer block housings 155
SONL plummer block housings 353
split seals 51
split spherical roller bearings 626
split surfaces 24
stabilizing (locating) rings 25
for CARB toroidal roller bearings 41, 51
in locating/non-locating bearing systems 40
mounting considerations 50–51
steam joint connections
for SBPN drying cylinder housings 594, 605–613
for SDM Yankee cylinder housings 594
steel converters → SKND converter trunnion housings
stepped shafts 42–43
stepped sleeves
for inch roller bearing units 696
for metric roller bearing units 662–663
stick-slip 41
storage 52
sumps → oil sumps
Superbolt tensioners
for SED plummer block housings 334–335, 339, 340
for SKND converter trunnion housings 628
support surfaces 24
specifications 45
surface roughness 45
SYE pillow block units → inch roller bearing units
SYNT plummer block units → metric roller bearing units (SKF ConCentra)
SYR pillow block units → inch roller bearing units
SYSTEM 24 → SKF SYSTEM 24

T

T
SAF pillow blocks 385
SAW pillow blocks 385
SDAF pillow blocks 451, 461
SE plummer block housings 141
SNL 2, 3, 5 & 6 plummer block housings 57, 70
SNL 30, 31 & 32 plummer block housings 191
SNLN plummer block housings 153, 166
T(V)A
SAF pillow blocks 385
SAW pillow blocks 385
SDAF pillow blocks 451
T(V)B
SAF pillow blocks 385
SAW pillow blocks 385
SDAF pillow blocks 451
taconite seals
applicable housings 30–31
for SBD plummer block housings 490, 492
for SDAF pillow blocks 454–461
for SNL 2, 3, 5 & 6 plummer block housings 64–66, 70, 78
for SNL 30, 31 & 32 plummer block housings 196–198, 200, 212
for SNLN plummer block housings 154, 160, 163–164, 166
for THD take-up housings 490, 492
for the SKF three-barrier solution 39
take-up housings → THD take-up housings
tapered seat mounting 34
TD
SE plummer block housings 141
SNL 2, 3, 5 & 6 plummer block housings 57, 70
SNL 30, 31 & 32 plummer block housings 191
SNLN plummer block housings 153, 166
temperature → operating temperature
terminology 22–26
textile machines 666
TF 661, 666
THD take-up housings 485–501, 526–529
accessories 501
adapter rings 487, 490–491, 501
adapter sleeve mounting 493, 526–529
applications 485
axial shaft displacement 491, 494
bearing types and dimension series 485, 492
breaking loads 494
compared with other non-split housings 28, 32
condition monitoring 501
contamination 491–492, 498
corrosion protection 489
cover bolts 488, 500
covers 488, 494
design considerations 493–497
designation systems 487
designs and variants 488–490
dimension standards 489
features and benefits 489
grease fittings 498
initial grease fills 498–499
load carrying capacity 485, 494
locating and non-locating bearing positions 494
lubrication 490, 498–501
materials 489, 491, 495
misalignment 491
mounting 501
operating speed 491, 495, 498
operating temperature 491, 495, 498
ordering information 501
paint specifications 489, 495
product tables 526–529
safety factors 494
sealing solutions 490–492
shaft diameter range 485
shaft specifications 491, 495
shaft-bearing combinations 493–494
stiffness 489
torque specifications 491, 500
thermal elongation 40–41
three-barrier solution → SKF three-barrier solution
TLC 385
torque wrenches 50
TriGard seals 697–699
triple ring seals 400
triple-lip seals 697–699
trunnion bearing housings
for converters in steel making 623–637
for grinding mills 639–657
TS 661, 666
TURA 191, 198, 215–217
TURP 191, 200, 215
TURT 191, 198, 215–218
TURU 57, 64
TV
SAF pillow blocks 385
SAW pillow blocks 385
SDAF pillow blocks 451
two-bearing housings → PD two-bearing housings

U

U 556
unit conversion table 10
units
inch roller bearing units 690–721
metric roller bearing units (SKF ConCentra) 659–689
PD two-bearing units 556, 567, 568, 432–439
unthreaded sleeve mounting 34

Note: Designation prefixes and suffixes for housings, pillow blocks and units are shown in **bold**.

V

V
FNL flanged housings 533, 537, 542
SE plummer block housings 141, 147
SED plummer block housings 333
SNL 2, 3, 5 & 6 plummer block housings 57, 80
SNL 30, 31 & 32 plummer block housings 191, 214
SNLN plummer block housings 153, 176
VC 625, 626
ventilating valves 643, 652
vertical shaft arrangements
with FNL flanged housings 538
with inch roller bearing units 699
with metric roller bearing units 668, 678
with SAF pillow blocks 390–391
with SAW pillow blocks 390–391
with SDAF pillow blocks 456–457
with SNL 2, 3, 5 & 6 plummer block housings 65–66
with SNL 30, 31 & 32 plummer block housings 197
with SNLN plummer block housings 161, 162–163
vibration
and SNL 2, 3, 5 & 6 plummer block housings 64
and SNL 30, 31 & 32 plummer block housings 196
and SNLN plummer block housings 158
and SONL plummer block housings 356
and the SKF self-aligning system 41
vibration analysis 52
V-ring seals
applicable housings 30–32, 34
for PD two-bearing housings 558–559
for SNL 2, 3, 5 & 6 plummer block housings 64–67, 70, 78, 80–81
for SNL 30, 31 & 32 plummer block housings 197–198
for SNLN plummer block housings 160–162, 164, 166, 176
VZ...
SAF pillow blocks 385
SAW pillow blocks 385
SDAF pillow blocks 451

W

W 661, 666
washing 36
wave spring washers 557, 560, 564
wave springs 662–663
wear sleeves 51
wet section 594–595
withdrawal sleeve mounting
applicable housings 30–32, 34
axial load carrying capacity 44
compared with other shaft-bearing combinations 43
shaft specifications 45

Y

Y
FYE flanged units (collar-mount) 693, 698
FYR(P) flanged units (collar-mount) 693, 698
SAF pillow blocks 385
SAW pillow blocks 385
SDAF pillow blocks 451
SYE pillow block units (SKF ConCentra / collar-mount) 693, 698
SYR pillow block units (SKF ConCentra / collar-mount) 693, 698
Yankee cylinder housings → SDM Yankee cylinder housings

Note: Designation prefixes and suffixes for housings, pillow blocks and units are shown in **bold**.

Product index

Series designation	Product	Product table No.	Page[1]
7225(00)	→ Flanged housings – FNL series	11	531
ASBPN ..	Drying cylinder housings – short, wide base	13.2	608
ASBPN .. N9	Drying cylinder housings, with inch connection threads – short, wide base	13.4	612
FNL 5..	Flanged housings for bearings on adapter sleeves	11.1	546
FSAF 0..	Pillow block housings	8.2	422
FSAF 13..	Pillow blocks with self-aligning ball bearings with a cylindrical bore	8.4	434
FSAF 15..	Pillow blocks with self-aligning ball bearings on an adapter sleeve	8.1	418
FSAF 16..	Pillow blocks with self-aligning ball bearings on an adapter sleeve	8.1	418
FSAF 2..	Pillow block housings	8.5	436
FSAF 2..	Pillow block housings	8.6	444
FSAF 222..	Pillow blocks with spherical roller bearings with a cylindrical bore	8.5	436
FSAF 223..	Pillow blocks with spherical roller bearings with a cylindrical bore	8.5	436
FSAF 225..	Pillow blocks with spherical roller bearings on an adapter sleeve	8.2	422
FSAF 226..	Pillow blocks with spherical roller bearings on an adapter sleeve	8.2	422
FSAF 230..	Pillow blocks with spherical roller bearings on an adapter sleeve	8.2	422
FSAF 3..	Pillow block housings	8.4	434
FSAF 3..	Pillow block housings	8.5	436
FSAF 3..	Pillow block housings	8.6	444
FSAF 5..	Pillow block housings	8.1	418
FSAF 5..	Pillow block housings	8.2	422
FSAF 5..	Pillow block housings	8.3	430
FSAF 6..	Pillow block housings	8.1	418
FSAF 6..	Pillow block housings	8.2	422
FSAF 6..	Pillow block housings	8.3	430
FSAF C22..	Pillow blocks with CARB bearings with a cylindrical bore	8.6	444
FSAF C23..	Pillow blocks with CARB bearings with a cylindrical bore	8.6	444
FSAF C25..	Pillow blocks with CARB bearings on an adapter sleeve	8.3	430
FSAF C26..	Pillow blocks with CARB bearings on an adapter sleeve	8.3	430
FSDR .. K	Trunnion bearing housings for grinding mills	15.1	656
FSYE ..	Inch roller bearing units with a four-bolt pillow block housing	17.2	714
FSYE .. N	SKF ConCentra inch roller bearing units with a four-bolt pillow block housing	17.2	714
FYE ..	Inch roller bearing units with a square flanged housing	17.3	716
FYNT ..	SKF ConCentra roller bearing units with a flanged housing, metric shafts	16.2	688
FYR ..	Inch roller bearing units with a round flanged housing	17.4	718
FYRP ..	Inch roller bearing units with a piloted flanged housing	17.4	718
PDN ..	Two-bearing housings	12.1	572
PDNB ..	Two-bearing units	12.1	572
PDP ..	Two-bearing housings	12.2	576
PDPF ..	Two-bearing units	12.2	576
PDR ..	Two-bearing housings	12.3	578
PDRJ ..	Two-bearing units	12.3	578
SAF 0..	Pillow block housings	8.2	422
SAF 0..	Pillow block housings	8.3	430
SAF 13..	Pillow blocks with self-aligning ball bearings with a cylindrical bore	8.4	434
SAF 15..	Pillow blocks with self-aligning ball bearings on an adapter sleeve	8.1	418
SAF 16..	Pillow blocks with self-aligning ball bearings on an adapter sleeve	8.1	418

[1] Starting page of the product table

Series designation	Product	Product table No.	Page[1]
SAF 2..	Pillow block housings	8.5	436
SAF 2..	Pillow block housings	8.6	444
SAF 222..	Pillow blocks with spherical roller bearings with a cylindrical bore	8.5	436
SAF 223..	Pillow blocks with spherical roller bearings with a cylindrical bore	8.5	436
SAF 225..	Pillow blocks with spherical roller bearings on an adapter sleeve	8.2	422
SAF 226..	Pillow blocks with spherical roller bearings on an adapter sleeve	8.2	422
SAF 230..	Pillow blocks with spherical roller bearings on an adapter sleeve	8.2	422
SAF 3..	Pillow block housings	8.4	434
SAF 3..	Pillow block housings	8.5	436
SAF 3..	Pillow block housings	8.6	444
SAF 5..	Pillow block housings	8.1	418
SAF 5..	Pillow block housings	8.2	422
SAF 5..	Pillow block housings	8.3	430
SAF 6..	Pillow block housings	8.1	418
SAF 6..	Pillow block housings	8.2	422
SAF 6..	Pillow block housings	8.3	430
SAF C22..	Pillow blocks with CARB bearings with a cylindrical bore	8.6	444
SAF C23..	Pillow blocks with CARB bearings with a cylindrical bore	8.6	444
SAF C25..	Pillow blocks with CARB bearings on an adapter sleeve	8.3	430
SAF C26..	Pillow blocks with CARB bearings on an adapter sleeve	8.3	430
SAF C30..	Pillow blocks with CARB bearings on an adapter sleeve	8.3	430
SAW 2..	Pillow block housings	8.5	436
SAW 2..	Pillow block housings	8.6	444
SAW 232..	Pillow blocks with spherical roller bearings with a cylindrical bore	8.5	436
SAW 235..	Pillow blocks with spherical roller bearings on an adapter sleeve	8.2	422
SAW 5..	Pillow block housings	8.2	422
SBDD ..	Plummer block housings for bearings on an adapter sleeve and a plain shaft	10.1	502
SBDD .. C	Plummer block housings for bearings on an adapter sleeve and a stepped shaft	10.2	508
SBDD .. E	Plummer block housings for bearings on a cylindrical seat and a stepped shaft	10.3	514
SBDD .. G	Plummer block housings for bearings on a cylindrical seat and a multi-stepped shaft	10.4	520
SBF ..	→ Housings for paper machines – SBFN, SBPN and SDM series	13	589
SBP ..	→ Housings for paper machines – SBFN, SBPN and SDM series	13	589
SBPN ..	Drying cylinder housings	13.1	606
SBPN .. N9	Drying cylinder housings, with inch connection threads	13.3	610
SD ..	→ Split plummer block housings – SNL 30, 31 and 32 series	5	189
SDAF 2..	Pillow block housings	9.2	474
SDAF 222..	Pillow blocks with spherical roller bearings with a cylindrical bore	9.2	474
SDAF 223..	Pillow blocks with spherical roller bearings with a cylindrical bore	9.2	474
SDAF 225..	Pillow blocks with spherical roller bearings on an adapter sleeve	9.1	472
SDAF 226..	Pillow blocks with spherical roller bearings on an adapter sleeve	9.1	472
SDAF 230..	Pillow blocks with spherical roller bearings with a cylindrical bore	9.4	480
SDAF 230.. KA	Pillow blocks with spherical roller bearings on an adapter sleeve	9.3	476
SDAF 231..	Pillow blocks with spherical roller bearings with a cylindrical bore	9.4	480
SDAF 231.. KA	Pillow blocks with spherical roller bearings on an adapter sleeve	9.3	476
SDAF 232..	Pillow blocks with spherical roller bearings with a cylindrical bore	9.4	480
SDAF 232.. KA	Pillow blocks with spherical roller bearings on an adapter sleeve	9.3	476
SDAF 3..	Pillow block housings	9.2	474
SDAF 30..	Pillow block housings	9.4	480
SDAF 30.. KA	Pillow block housings	9.3	476
SDAF 31..	Pillow block housings	9.4	480
SDAF 31.. KA	Pillow block housings	9.3	476
SDAF 32..	Pillow block housings	9.4	480
SDAF 32.. KA	Pillow block housings	9.3	476
SDAF 5..	Pillow block housings	9.1	472
SDAF 6..	Pillow block housings	9.1	472
SDD ..	→ Split plummer block housings – SNL 30, 31 and 32 series	5	189
SDKD ..	→ Split plummer block housings for converters in steel making – SKND series	14	623
SDM ..	Yankee cylinder housings	13.5	614
SDM .. N9	Yankee cylinder housings, with inch connection threads	13.6	618
SE 2 ..	Plummer block housings for bearings on a cylindrical seat	2.3	120
SE 5 ..	Plummer block housings for bearings on an adapter sleeve, metric shafts	2.1	86
SE 5 ..	Plummer block housings for bearings on an adapter sleeve, inch shafts	2.2	100
SE 5 ..	Plummer block housings for bearings on a cylindrical seat	2.3	120

[1] Starting page of the product table

18.2 Product index

Series designation	Product	Product table No.	Page[1]
SED ..	Plummer block housings for bearings on an adapter sleeve	6.1	344
SKND ..	Plummer block housings for converters in steel making	14.1	634
SN ..	→ Split plummer block housings – SNL 2, 3, 5 and 6 series	2	55
SN 30..	→ Split plummer block housings – SNLN 30 series	4	151
SNA ..	→ Split plummer block housings – SNL 2, 3, 5 and 6 series	2	55
SNH ..	→ Split plummer block housings – SNL 2, 3, 5 and 6 series	2	55
SNL 2..	Plummer block housings for bearings on a cylindrical seat	2.3	120
SNL 30..	Plummer block housings for bearings on an adapter sleeve, metric shafts	5.1	222
SNL 30..	Plummer block housings for bearings on an adapter sleeve, inch shafts	5.2	260
SNL 30..	Plummer block housings for bearings on a cylindrical seat	5.3	302
SNL 30.. G	Plummer block housings for bearings on a cylindrical seat	5.3	302
SNL 31..	Plummer block housings for bearings on an adapter sleeve, metric shafts	5.1	222
SNL 31..	Plummer block housings for bearings on an adapter sleeve, inch shafts	5.2	260
SNL 31..	Plummer block housings for bearings on a cylindrical seat	5.3	302
SNL 31.. G	Plummer block housings for bearings on a cylindrical seat	5.3	302
SNL 32..	Plummer block housings for bearings on an adapter sleeve, metric shafts	5.1	222
SNL 32..	Plummer block housings for bearings on an adapter sleeve, inch shafts	5.2	260
SNL 32.. G	Plummer block housings for bearings on a cylindrical seat	5.3	302
SNL 5..	Plummer block housings for bearings on an adapter sleeve, metric shafts	2.1	86
SNL 5..	Plummer block housings for bearings on an adapter sleeve, inch shafts	2.2	100
SNL 5..	Plummer block housings for bearings on a cylindrical seat	2.3	120
SNL 6..	Plummer block housings for bearings on an adapter sleeve, metric shafts	2.1	86
SNL 6..	Plummer block housings for bearings on an adapter sleeve, inch shafts	2.2	100
SNLN 30..	Plummer block housings for bearings on an adapter sleeve	4.1	176
SNLN 30..	Plummer block housings for bearings on a cylindrical seat	4.2	180
SOFN ..	→ Split plummer block housings – SONL series	7	349
SONL	Plummer block housings for bearings on an adapter sleeve, metric shafts	7.1	370
SONL	Plummer block housings for bearings on an adapter sleeve, inch shafts	7.2	374
SONL	Plummer block housings for bearings on a cylindrical seat	7.3	378
SYE ..	Inch roller bearing units with a two-bolt pillow block housing	17.1	708
SYE .. N	SKF ConCentra inch roller bearing units with a two-bolt pillow block housing	17.1	708
SYNT ..	SKF ConCentra roller bearing units with a plummer block housing, metric shafts	16.1	686
SYR ..	Inch roller bearing units with a two-bolt pillow block housing	17.1	708
SYR .. N	SKF ConCentra inch roller bearing units with a two-bolt pillow block housing	17.1	708
SYT ..	→ Metric roller bearings units – SYNT and FYNT series (SKF ConCentra)	16	659
THDD ..	Take-up housings for spherical roller bearings on an adapter sleeve and a plain shaft	10.5	526
VJ-PDNB 2..	Shafts for two-bearing housings in the PDN 2 series	12.4	580
VJ-PDNB 3..	Shafts for two-bearing housings in the PDN 3 series	12.5	582
VJ-PDPF ..	Shafts for two-bearing housings in the PDP series	12.6	584
VJ-PDRJ ..	Shafts for two-bearing housings in the PDR series	12.7	586

[1] Starting page of the product table

Bearing index

Bearing designation	Housing / Pillow block / Bearing unit	Product table No.	Page
Self-aligning ball bearings			
1205 ETN9	SNL 205	2.3	120
	SNL 505	2.3	120
1205 EKTN9 + H 205	SNL 505	2.1	86
	FNL 505	11.1	546
1205 EKTN9 + HE 205	SNL 505	2.2	100
1206 ETN9	SNL 206-305	2.3	120
	SNL 506-605	2.3	120
1206 EKTN9 + H 206	SNL 506-605	2.1	86
	FNL 506	11.1	546
1206 EKTN9 + HA 206	SNL 506-605	2.2	100
1206 EKTN9 + HE 206	SNL 506-605	2.2	100
1207 E	SE 207	2.3	122
	SE 507-606	2.3	122
1207 EKTN9 + H 207	SE 507-606	2.1	86
	FNL 507	11.1	546
1207 EKTN9 + HA 207	SE 507-606	2.2	102
1207 EKTN9 + SNW 7x1.3/16	SAF 1507	8.1	418
1208 ETN9	SE 208-307	2.3	122
	SE 508-607	2.3	122
1208 EKTN9 + H 208	SE 508-607	2.1	88
	FNL 508	11.1	546
1208 EKTN9 + HE 208	SE 508-607	2.2	102
1209 ETN9	SE 209	2.3	124
	SE 509	2.3	124
1209 EKTN9 + H 209	SE 509	2.1	88
	FNL 509	11.1	546
1209 EKTN9 + HA 209	SE 509	2.2	102
1209 EKTN9 + HE 209	SE 509	2.2	104
1209 EKTN9 + SNW 9x1.7/16	SAF 1509	8.1	418
1210 ETN9	SE 210	2.3	124
	SE 510-608	2.3	124
1210 EKTN9 + H 210	SE 510-608	2.1	88
	FNL 510	11.1	548
1210 EKTN9 + HA 210	SE 510-608	2.2	104
1210 EKTN9 + HE 210	SE 510-608	2.2	104
1210 EKTN9 + SNW 10x1.11/16	SAF 1510	8.1	418
1211 ETN9	SE 211	2.3	126
	SE 511-609	2.3	126
1211 EKTN9 + H 211	SE 511-609	2.1	90
	FNL 511	11.1	548
1211 EKTN9 + HA 211	SE 511-609	2.2	106
1211 EKTN9 + HE 211 B	SE 511-609	2.2	106
1211 EKTN9 + SNW 11x1.15/16	SAF 1511	8.1	418
1212 ETN9	SE 212	2.3	126
	SE 512-610	2.3	126
1212 EKTN9 + H 212	SE 512-610	2.1	90
	FNL 512	11.1	548
1213 ETN9	SE 213	2.3	128
	SE 513-611	2.3	128
1213 EKTN9 + H 213	SE 513-611	2.1	90
	FNL 513	11.1	548
1213 EKTN9 + HA 213	SE 513-611	2.2	106
1213 EKTN9 + HE 213	SE 513-611	2.2	108

Bearing designation	Housing / Pillow block / Bearing unit	Product table No.	Page
1213 EKTN9 + SNW 13x2.3/16	SAF 1513	8.1	418
1215	SE 215	2.3	130
	SE 515-612	2.3	130
1215 K + H 215	SE 515-612	2.1	92
	FNL 515	11.1	550
1215 K + HA 215	SE 515-612	2.2	108
1215 K + HE 215	SE 515-612	2.2	108
1215 K + SNW 15x2.7/16	SAF 1515	8.1	418
1216	SNL 216	2.3	130
	SNL 516-613	2.3	130
1216 K + H 216	SNL 516-613	2.1	92
	FNL 516	11.1	550
1216 K + HA 216	SNL 516-613	2.2	110
1216 K + HE 216	SNL 516-613	2.2	110
1216 K + SNW 16x2.11/16	SAF 1516	8.1	418
1217	SNL 217	2.3	132
	SNL 517	2.3	132
1217 K + H 217	SNL 517	2.1	92
	FNL 517	11.1	550
1217 K + HA 217	SNL 517	2.2	110
1217 K + HE 217	SNL 517	2.2	112
1217 K + SNW 17x2.15/16	SAF 1517	8.1	420
1218	SNL 218	2.3	132
	SNL 518-615	2.3	132
1218 K + H 218	SNL 518-615	2.1	94
	FNL 518	11.1	550
1218 K + HA 218	SNL 518-615	2.2	112
1218 K + HE 218	SNL 518-615	2.2	112
1218 K + SNW 18x3.3/16	SAF 1518	8.1	420
1219 K + H 219	SNL 519-616	2.1	94
1220	SNL 520-617	2.3	134
1220 K + H 220	SNL 520-617	2.1	94
	FNL 520	11.1	550
1220 K + HA 220	SNL 520-617	2.2	114
1220 K + HE 220	SNL 520-617	2.2	114
1220 K + SNW 20x3.7/16	SAF 1520	8.1	420
1222	SNL 522-619	2.3	134
1222 K + H 222	SNL 522-619	2.1	96
	SNL 522-619	2.2	114
	FNL 522	11.1	550
1222 K + HE 222	SNL 522-619	2.2	116
1222 K + SNW 22x3.15/16	SAF 1522	8.1	420
1224 M	SNL 524-620	2.3	134
1224 KM + H 3024	SNL 524-620	2.1	96
1224 KM + HA 3024	SNL 524-620	2.2	116
1224 KM + HE 3024	SNL 524-620	2.2	116
1226 M	SNL 526	2.3	136
1305 ETN9	SNL 206-305	2.3	120
1305 EKTN9 + H 305	SNL 506-605	2.1	86
1305 EKTN9 + HE 305	SNL 506-605	2.2	100
1306 ETN9	SE 507-606	2.3	120
1306 EKTN9 + H 306	SE 507-606	2.1	86
1306 EKTN9 + HA 306	SE 507-606	2.2	100
1306 EKTN9 + HE 306	SE 507-606	2.2	100
1307 ETN9	SE 208-307	2.3	122
1307 EKTN9 + H 307	SE 508-607	2.1	86
1307 EKTN9 + HA 307	SE 508-607	2.2	102
1308 ETN9	SE 510-608	2.3	122
	SAF 1308	8.4	434
1308 EKTN9 + H 308	SE 510-608	2.1	88
1308 EKTN9 + HE 308	SE 510-608	2.2	102
1309 ETN9	SE 511-609	2.3	124
	SAF 1309	8.4	434
1309 EKTN9 + H 309	SE 511-609	2.1	88
1309 EKTN9 + HA 309	SE 511-609	2.2	102
1309 EKTN9 + HE 309	SE 511-609	2.2	104
1309 EKTN9 + SNW 9x1.7/16	SAF 1609	8.1	418
1310 ETN9	SE 512-610	2.3	124
	SAF 1310	8.4	434
1310 EKTN9 + H 310	SE 512-610	2.1	88
1310 EKTN9 + HA 310	SE 512-610	2.2	104
1310 EKTN9 + HE 310	SE 512-610	2.2	104
1310 EKTN9 + SNW 10x1.11/16	SAF 1610	8.1	418

Bearing designation	Housing / Pillow block / Bearing unit	Product table No.	Page
1311 ETN9	SE 513-611	2.3	126
	SAF 1311	8.4	434
1311 EKTN9 + H 311	SE 513-611	2.1	90
1311 EKTN9 + HA 311	SE 513-611	2.2	106
1311 EKTN9 + HE 311	SE 513-611	2.2	106
1311 EKTN9 + SNW 11x1.15/16	SAF 1611	8.1	418
1312 ETN9	SE 515-612	2.3	126
	SAF 1312	8.4	434
1312 EKTN9 + H 312	SE 515-612	2.1	90
1313 ETN9	SNL 516-613	2.3	128
	SAF 1313	8.4	434
1313 EKTN9 + H 313	SNL 516-613	2.1	90
1313 EKTN9 + HA 313	SNL 516-613	2.2	106
1313 EKTN9 + HE 313	SNL 516-613	2.2	108
1313 EKTN9 + SNW 13x2.3/16	SAF 1613	8.1	418
1314	SNL 517	2.3	128
	SAF 1314	8.4	434
1315	SNL 518-615	2.3	130
	SAF 1315	8.4	434
1315 K + H 315	SNL 518-615	2.1	92
1315 K + HA 315	SNL 518-615	2.2	108
1315 K + HE 315	SNL 518-615	2.2	108
1315 K + SNW 15x2.7/16	SAF 1615	8.1	418
1316	SNL 519-616	2.3	130
	SAF 1316	8.4	434
1316 K + H 316	SNL 519-616	2.1	92
1316 K + HA 316	SNL 519-616	2.2	110
1316 K + HE 316	SNL 519-616	2.2	110
1316 K + SNW 16x2.11/16	SAF 1616	8.1	418
1317	SNL 520-617	2.3	132
	SAF 1317	8.4	434
1317 K + H 317	SNL 520-617	2.1	92
	SNL 520-617	2.2	112
1317 K + HA 317	SNL 520-617	2.2	110
1317 K + SNW 17x2.15/16	SAF 1617	8.1	420
1318	SAF 1318	8.4	434
1318 K + SNW 18x3.3/16	SAF 1618	8.1	420
1319	SNL 522-619	2.3	134
1319 K + H 319	SNL 522-619	2.1	94
1319 K + HE 319	SNL 522-619	2.2	112
1320	SNL 524-620	2.3	134
	SAF 1320	8.4	434
1320 K + H 320	SNL 524-620	2.1	94
1320 K + HA 320	SNL 524-620	2.2	114
1320 K + HE 320	SNL 524-620	2.2	114
1320 K + SNW 20x3.7/16	SAF 1620	8.1	420
1322	SAF 1322	8.4	434
1322 KM + SNW 22x3.15/16	SAF 1622	8.1	420
2205 ETN9	SNL 205	2.3	120
	SNL 505	2.3	120
2205 EKTN9 + H 305	SNL 505	2.1	86
	FNL 505	11.1	546
2205 EKTN9 + HE 305	SNL 505	2.2	100
2206 ETN9	SNL 206-305	2.3	120
	SNL 506-605	2.3	120
2206 EKTN9 + H 306	SNL 506-605	2.1	86
	FNL 506	11.1	546
2206 EKTN9 + HA 306	SNL 506-605	2.2	100
2206 EKTN9 + HE 306	SNL 506-605	2.2	100
2207 ETN9	SE 207	2.3	122
	SE 507-606	2.3	122
2207 EKTN9 + H 307	SE 507-606	2.1	86
	FNL 507	11.1	546
2207 EKTN9 + HA 307	SE 507-606	2.2	102
2208 ETN9	SE 208-307	2.3	122
	SE 508-607	2.3	122
2208 EKTN9 + H 308	SE 508-607	2.1	88
	FNL 508	11.1	546
2208 EKTN9 + HE 308	SE 508-607	2.2	102
2209 ETN9	SE 209	2.3	124
	SE 509	2.3	124
2209 EKTN9 + H 309	SE 509	2.1	88
	FNL 509	11.1	546

Bearing designation	Housing / Pillow block / Bearing unit	Product table No.	Page
2209 EKTN9 + HA 309	SE 509	2.2	102
2209 EKTN9 + HE 309	SE 509	2.2	104
2210 ETN9	SE 210	2.3	124
	SE 510-608	2.3	124
2210 EKTN9 + H 310	SE 510-608	2.1	88
	FNL 510	11.1	548
2210 EKTN9 + HA 310	SE 510-608	2.2	104
2210 EKTN9 + HE 310	SE 510-608	2.2	104
2211 ETN9	SE 211	2.3	126
	SE 511-609	2.3	126
2211 EKTN9 + H 311	SE 511-609	2.1	90
	FNL 511	11.1	548
2211 EKTN9 + HA 311	SE 511-609	2.2	106
2211 EKTN9 + HE 311 B	SE 511-609	2.2	106
2212 ETN9	SE 212	2.3	126
	SE 512-610	2.3	126
2212 EKTN9 + H 312	SE 512-610	2.1	90
	FNL 512	11.1	548
2213 ETN9	SE 213	2.3	128
	SE 513-611	2.3	128
2213 EKTN9 + H 313	SE 513-611	2.1	90
	FNL 513	11.1	548
2213 EKTN9 + HA 313	SE 513-611	2.2	106
2213 EKTN9 + HE 313	SE 513-611	2.2	108
2215 ETN9	SE 215	2.3	130
	SE 515-612	2.3	130
2215 EKTN9 + H 315	SE 515-612	2.1	92
	FNL 515	11.1	550
2215 EKTN9 + HA 315	SE 515-612	2.2	108
2215 EKTN9 + HE 315	SE 515-612	2.2	108
2216 ETN9	SNL 216	2.3	130
	SNL 516-613	2.3	130
2216 EKTN9 + H 316	SNL 516-613	2.1	92
	FNL 516	11.1	550
2216 EKTN9 + HA 316	SNL 516-613	2.2	110
2216 EKTN9 + HE 316	SNL 516-613	2.2	110
2217	SNL 217	2.3	132
	SNL 517	2.3	132
	SONL 217-517	7.3	378
2217 K + H 317	SNL 517	2.1	92
	SONL 217-517	7.1	370
	FNL 517	11.1	550
2217 K + HA 317	SNL 517	2.2	110
	SONL 217-517	7.2	374
2217 K + HE 317	SNL 517	2.2	112
2218	SNL 218	2.3	132
	SNL 518-615	2.3	132
	SONL 218-518	7.3	378
2218 K + H 318	SNL 518-615	2.1	94
	SONL 218-518	7.1	370
	FNL 518	11.1	550
2218 K + HA 318	SNL 518-615	2.2	112
	SONL 218-518	7.2	374
2218 K + HE 318	SNL 518-615	2.2	112
2219 KM + H 319	SNL 519-616	2.1	94
2220 M	SNL 520-617	2.3	134
	SONL 220-520	7.3	378
2220 KM + H 320	SNL 520-617	2.1	94
	SONL 220-520	7.1	370
	FNL 520	11.1	550
2220 KM + HA 320	SNL 520-617	2.2	114
	SONL 220-520	7.2	374
2220 KM + HE 320	SNL 520-617	2.2	114
2222 M	SNL 522-619	2.3	134
	SONL 222-522	7.3	378
2222 KM + H 322	SNL 522-619	2.1	96
	SNL 522-619	2.2	114
	SONL 222-522	7.1	370
	SONL 222-522	7.2	374
	FNL 522	11.1	550
2222 KM + HE 322	SNL 522-619	2.2	116
2305 ETN9	SNL 206-305	2.3	120
2306	SE 507-606	2.3	120

Bearing designation	Housing / Pillow block / Bearing unit	Product table No.	Page
2306 K + H 2306	SE 507-606	2.1	86
2306 K + HA 2306	SE 507-606	2.2	100
2306 K + HE 2306	SE 507-606	2.2	100
2307 ETN9	SE 208-307	2.3	122
2307 EKTN9 + H 2307	SE 508-607	2.1	86
2307 EKTN9 + HA 2307	SE 508-607	2.2	102
2308 ETN9	SE 510-608	2.3	122
2308 EKTN9 + H 2308	SE 510-608	2.1	88
2308 EKTN9 + HE 2308	SE 510-608	2.2	102
2309 ETN9	SE 511-609	2.3	124
2309 EKTN9 + H 2309	SE 511-609	2.1	88
2309 EKTN9 + HA 2309	SE 511-609	2.2	102
2309 EKTN9 + HE 2309	SE 511-609	2.2	104
2310	SE 512-610	2.3	124
2310 K + H 2310	SE 512-610	2.1	88
2310 K + HA 2310	SE 512-610	2.2	104
2310 K + HE 2310	SE 512-610	2.2	104
2311	SE 513-611	2.3	126
2311 K + H 2311	SE 513-611	2.1	90
2311 K + HA 2311	SE 513-611	2.2	106
2311 K + HE 2311 B	SE 513-611	2.2	106
2312	SE 515-612	2.3	126
2312 K + H 2312	SE 515-612	2.1	90
2313	SNL 516-613	2.3	128
2313 K + H 2313	SNL 516-613	2.1	90
2313 K + HA 2313	SNL 516-613	2.2	106
2313 K + HE 2313	SNL 516-613	2.2	108
2314	SNL 517	2.3	128
2315	SNL 518-615	2.3	130
2315 K + H 2315	SNL 518-615	2.1	92
2315 K + HA 2315	SNL 518-615	2.2	108
2315 K + HE 2315	SNL 518-615	2.2	108
2316	SNL 519-616	2.3	130
2316 K + H 2316	SNL 519-616	2.1	92
2316 K + HA 2316	SNL 519-616	2.2	110
2316 K + HE 2316	SNL 519-616	2.2	110
2317	SNL 520-617	2.3	132
2317 K + H 2317	SNL 520-617	2.1	92
2317 K + HA 2317	SNL 520-617	2.2	110
2317 K + HE 2317	SNL 520-617	2.2	112
2319 M	SNL 522-619	2.3	134
2319 KM + H 2319	SNL 522-619	2.1	94
2319 KM + HE 2319	SNL 522-619	2.2	112
2320 M	SNL 524-620	2.3	134
2320 KM + H 2320	SNL 524-620	2.1	94
2320 KM + HA 2320	SNL 524-620	2.2	114
2320 KM + HE 2320	SNL 524-620	2.2	114

Bearing designation	Housing / Pillow block / Bearing unit	Product table No.	Page
Spherical roller bearings			
21305 CC	SNL 206-305	2.3	120
21306 CC	SE 507-606	2.3	120
21306 CCK + H 306	SE 507-606	2.1	86
21306 CCK + HA 306	SE 507-606	2.2	100
21306 CCK + HE 2306	SE 507-606	2.2	100
21307 CC	SE 208-307	2.3	122
21307 CCK + H 307	SE 508-607	2.1	86
21307 CCK + HA 307	SE 508-607	2.2	102
21308 E	SE 510-608	2.3	122
21308 EK + H 308	SE 510-608	2.1	88
21308 EK + HE 308	SE 510-608	2.2	102
21309 E	SE 511-609	2.3	124
21309 EK + H 309	SE 511-609	2.1	88
21309 EK + HA 309	SE 511-609	2.2	102
21309 EK + HE 309	SE 511-609	2.2	104
21310 E	SE 512-610	2.3	124
21310 EK + H 310	SE 512-610	2.1	88
21310 EK + HA 310	SE 512-610	2.2	104
21310 EK + HE 310	SE 512-610	2.2	104
21311 E	SE 513-611	2.3	126
21311 EK + H 311	SE 513-611	2.1	90
21311 EK + HA 311	SE 513-611	2.2	106
21311 EK + HE 311	SE 513-611	2.2	106
21312 E	SE 515-612	2.3	126
21312 EK + H 312	SE 515-612	2.1	90
21313 E	SNL 516-613	2.3	128
21313 EK + H 313	SNL 516-613	2.1	90
21313 EK + HA 313	SNL 516-613	2.2	106
21313 EK + HE 313	SNL 516-613	2.2	108
21314 E	SNL 517	2.3	128
21315 E	SNL 518-615	2.3	130
21315 EK + H 315	SNL 518-615	2.1	92
21315 EK + HA 315	SNL 518-615	2.2	108
21315 EK + HE 315	SNL 518-615	2.2	108
21316 E	SNL 519-616	2.3	130
21316 EK + H 316	SNL 519-616	2.1	92
21316 EK + HA 316	SNL 519-616	2.2	110
21316 EK + HE 316	SNL 519-616	2.2	110
21317 E	SNL 520-617	2.3	132
21317 EK + H 317	SNL 520-617	2.1	92
	SNL 520-617	2.2	112
21317 EK + HA 317	SNL 520-617	2.2	110
21319 E	SNL 522-619	2.3	134
21319 EK + H 319	SNL 522-619	2.1	94
21319 EK + HE 319	SNL 522-619	2.2	112
21320 E	SNL 524-620	2.3	134
21320 EK + H 320	SNL 524-620	2.1	94
21320 EK + HA 320	SNL 524-620	2.2	114
21320 EK + HE 320	SNL 524-620	2.2	114
22205 E	SNL 205	2.3	120
	SNL 505	2.3	120
22205 EK + H 305	SNL 505	2.1	86
	FNL 505	11.1	546
22205 EK + HE 305	SNL 505	2.2	100
22206 E	SNL 206-305	2.3	120
	SNL 506-605	2.3	120
22206 EK + H 306	SNL 506-605	2.1	86
	FNL 506	11.1	546
22206 EK + HA 306	SNL 506-605	2.2	100
22206 EK + HE 306	SNL 506-605	2.2	100
22207 E	SE 207	2.3	122
	SE 507-606	2.3	122
	SYNT 35	16.1	686
	FYNT 35	16.2	688
22207 EK + H 307	SE 507-606	2.1	86
	FNL 507	11.1	546
22207 EK + HA 307	SE 507-606	2.2	102
22207 EK + SNW 7x1.3/16	SAF 22507	8.2	422

18.3 Bearing index

Bearing designation	Housing / Pillow block / Bearing unit	Product table No.	Page
22208 E	SE 208-307	2.3	122
	SE 508-607	2.3	122
	SYNT 40	16.1	686
	FYNT 40	16.2	688
22208 EK + H 308	SE 508-607	2.1	88
	FNL 508	11.1	546
22208 EK + HE 308	SE 508-607	2.2	102
22209 E	SE 209	2.3	124
	SE 509	2.3	124
	SYNT 45	16.1	686
	FYNT 45	16.2	688
22209 EK + H 309	SE 509	2.1	88
	FNL 509	11.1	546
22209 EK + HA 309	SE 509	2.2	102
22209 EK + HE 309	SE 509	2.2	104
22209 EK + SNW 9x1.7/16	SAF 22509	8.2	422
22210 E	SE 210	2.3	124
	SE 510-608	2.3	124
	SYNT 50	16.1	686
	FYNT 50	16.2	688
22210 EK + H 310	SE 510-608	2.1	88
	FNL 510	11.1	548
22210 EK + HA 310	SE 510-608	2.2	104
22210 EK + HE 310	SE 510-608	2.2	104
22210 EK + SNW 10x1.11/16	SAF 22510	8.2	422
22211 E	SE 211	2.3	126
	SE 511-609	2.3	126
	SYNT 55	16.1	686
	FYNT 55	16.2	688
22211 EK + H 311	SE 511-609	2.1	90
	THDD 2211	10.5	526
	FNL 511	11.1	548
22211 EK + HA 311	SE 511-609	2.2	106
22211 EK + HE 311 B	SE 511-609	2.2	106
22211 EK + SNW 11x1.15/16	SAF 22511	8.2	422
22212 E	SE 212	2.3	126
	SE 512-610	2.3	126
	SYNT 60	16.1	686
	FYNT 60	16.2	688
22212 EK + H 312	SE 512-610	2.1	90
	THDD 2212	10.5	526
	FNL 512	11.1	548
22213 E	SE 213	2.3	128
	SE 513-611	2.3	128
	SAF 22213	8.5	436
	SYNT 65	16.1	686
	FYNT 65	16.2	688
22213 EK + H 313	SE 513-611	2.1	90
	SBDD 2213	10.1	502
	THDD 2213	10.5	526
	FNL 513	11.1	548
22213 EK + HA 313	SE 513-611	2.2	106
22213 EK + HE 313	SE 513-611	2.2	108
22213 EK + SNW 13x2.3/16	SAF 22513	8.2	422
22214 E	SYNT 70	16.1	686
	FYNT 70	16.2	688
22215 E	SE 215	2.3	130
	SE 515-612	2.3	130
	SAF 22215	8.5	436
	SYNT 75	16.1	686
	FYNT 75	16.2	688
22215 EK + H 315	SE 515-612	2.1	92
	FNL 515	11.1	550
22215 EK + HA 315	SE 515-612	2.2	108
22215 EK + HE 315	SE 515-612	2.2	108
22215 EK + SNW 15x2.7/16	SAF 22515	8.2	422
22216 E	SNL 216	2.3	130
	SNL 516-613	2.3	130
	SAF 22216	8.5	438
	SYNT 80	16.1	686
	FYNT 80	16.2	688

Bearing designation	Housing / Pillow block / Bearing unit	Product table No.	Page
22216 EK + H 316	SNL 516-613	2.1	92
	THDD 2216	10.5	526
	FNL 516	11.1	550
22216 EK + HA 316	SNL 516-613	2.2	110
22216 EK + HE 316	SNL 516-613	2.2	110
22216 EK + SNW 16x2.11/16	SAF 22516	8.2	422
22217 E	SNL 217	2.3	132
	SNL 517	2.3	132
	SONL 217-517	7.3	378
	SAF 22217	8.5	438
22217 EK + H 317	SNL 517	2.1	92
	SONL 217-517	7.1	370
	FNL 517	11.1	550
22217 EK + HA 317	SNL 517	2.2	110
	SONL 217-517	7.2	374
22217 EK + HE 317	SNL 517	2.2	112
22217 EK + SNW 17x2.15/16	SAF 22517	8.2	424
22218 E	SNL 218	2.3	132
	SNL 518-615	2.3	132
	SONL 218-518	7.3	378
	SAF 22218	8.5	438
	SYNT 90	16.1	686
	FYNT 90	16.2	688
22218 EK + H 318	SNL 518-615	2.1	94
	SONL 218-518	7.1	370
	SBDD 2218	10.1	502
	THDD 2218	10.5	526
	FNL 518	11.1	550
22218 EK + HA 318	SNL 518-615	2.2	112
	SONL 218-518	7.2	374
22218 EK + HE 318	SNL 518-615	2.2	112
22218 EK + SNW 18x3.3/16	SAF 22518	8.2	424
22219 EK + H 319	SNL 519-616	2.1	94
22220 E	SNL 520-617	2.3	134
	SONL 220-520	7.3	378
	SAF 22220	8.5	438
	SDAF 22220	9.2	474
	SBDD 2220	10.3	514
	SBDD 2220	10.4	520
	SYNT 100	16.1	686
	FYNT 100	16.2	688
22220 EK + H 320	SNL 520-617	2.1	94
	SONL 220-520	7.1	370
	SBDD 2220	10.1	502
	SBDD 2220	10.2	508
	THDD 2220	10.5	526
	FNL 520	11.1	550
22220 EK + HA 320	SNL 520-617	2.2	114
	SONL 220-520	7.2	374
22220 EK + HE 320	SNL 520-617	2.2	114
22220 EK + SNW 20	SDAF 22520	9.1	472
22220 EK + SNW 20x3.7/16	SAF 22520	8.2	424
22222 E	SNL 522-619	2.3	134
	SONL 222-522	7.3	378
	SAF 22222	8.5	438
	SDAFS 22222	9.2	474
	SBDD 2222	10.3	514
	SBDD 2222	10.4	520
22222 EK + H 322	SNL 522-619	2.1	96
	SNL 522-619	2.2	114
	SONL 222-522	7.1	370
	SONL 222-522	7.2	374
	SBDD 2222	10.1	502
	SBDD 2222	10.2	508
	THDD 2222	10.5	526
	FNL 522	11.1	550
22222 EK + HE 322	SNL 522-619	2.2	116
22222 EK + SNW 22	SDAFS 22522	9.1	472
22222 EK + SNW 22x3.15/16	SAF 22522	8.2	424

18.3 Bearing index

Bearing designation	Housing / Pillow block / Bearing unit	Product table No.	Page
22224 E	SNL 524-620	2.3	134
	SONL 224-524	7.3	378
	SAF 22224	8.5	440
	SDAF 22224	9.2	474
	SBDD 2224	10.3	514
	SBDD 2224	10.4	520
22224 EK + H 3124	SNL 524-620	2.1	96
	SONL 224-524	7.1	370
	SBDD 2224	10.1	502
	SBDD 2224	10.2	508
	THDD 2224	10.5	526
22224 EK + HA 3124	SNL 524-620	2.2	116
	SONL 224-524	7.2	374
22224 EK + HE 3124	SNL 524-620	2.2	116
22224 EK + SNW 24	SDAF 22524	9.1	472
22224 EK + SNW 24x4.3/16	SAF 22524	8.2	424
22226 E	SNL 526	2.3	136
	SONL 226-526	7.3	378
	SAF 22226	8.5	440
	SDAF 22226	9.2	474
	SBDD 2226	10.3	514
	SBDD 2226	10.4	520
22226 EK + H 3126	SNL 526	2.1	96
	SONL 226-526	7.1	370
	SBDD 2226	10.1	502
	SBDD 2226	10.2	508
22226 EK + HA 3126	SNL 526	2.2	116
	SONL 226-526	7.2	374
22226 EK + HE 3126	SNL 526	2.2	116
22226 EK + SNW 26	SDAF 22526	9.1	472
22226 EK + SNW 26x4.7/16	SAF 22526	8.2	426
22228 CC	SONL 228-528	7.3	378
22228 CC/W33	SNL 528	2.3	136
	SAF 22228	8.5	440
	SDAFS 22228	9.2	474
	SBDD 2228	10.3	514
	SBDD 2228	10.4	520
22228 CCK/W33 + H 3128	SNL 528	2.1	96
	SONL 228-528	7.1	370
	SBDD 2228	10.1	502
	SBDD 2228	10.2	508
	THDD 2228	10.5	526
22228 CCK/W33 + HA 3128	SNL 528	2.2	118
	SONL 228-528	7.2	374
22228 CCK/W33 + HE 3128	SNL 528	2.2	118
22228 CCK/W33 + SNW 28	SDAFS 22528	9.1	472
22228 CCK/W33 + SNW 28x4.15/16	SAF 22528	8.2	426
22228-2CS5	SNL 528	2.3	136
22228-2CS5K + H 3128 L	SNL 528	2.1	96
22228-2CS5K + HA 3128 L	SNL 528	2.2	118
22228-2CS5K + HE 3128 L	SNL 528	2.2	118
22230 CC	SONL 230-530	7.3	378
22230 CC/W33	SNL 530	2.3	136
	SAF 22230	8.5	440
	SDAF 22230	9.2	474
	SBDD 2230	10.3	514
	SBDD 2230	10.4	520
22230 CCK/W33 + H 3130	SNL 530	2.1	96
	SONL 230-530	7.1	370
	SBDD 2230	10.1	502
	SBDD 2230	10.2	508
22230 CCK/W33 + HA 3130	SNL 530	2.2	118
	SONL 230-530	7.2	374
22230 CCK/W33 + HE 3130	SNL 530	2.2	118
22230 CCK/W33 + SNW 30	SDAF 22530	9.1	472
22230 CCK/W33 + SNW 30x5.3/16	SAF 22530	8.2	426
22230-2CS5	SNL 530	2.3	136
22230-2CS5K + H 3130	SNL 530	2.1	96
22230-2CS5K + HA 3130	SNL 530	2.2	118
22230-2CS5K + HE 3130	SNL 530	2.2	118
22232 CC	SONL 232-532	7.3	378

SKF

Bearing designation	Housing / Pillow block / Bearing unit	Product table No.	Page
22232 CC/W33	SNL 532	2.3	136
	SNL 3038	5.3	302
	SAF 22232	8.5	440
	SDAF 22232	9.2	474
	SBDD 2232	10.3	514
	SBDD 2232	10.4	520
22232 CCK/W33 + H 3132	SNL 532	2.1	98
	SNL 3038	5.1	222
	SONL 232-532	7.1	370
	SBDD 2232	10.1	502
	SBDD 2232	10.2	508
22232 CCK/W33 + HA 3132	SNL 532	2.2	118
	SNL 3038	5.2	260
	SONL 232-532	7.2	376
22232 CCK/W33 + HE 3132	SNL 532	2.2	118
	SNL 3038	5.2	260
22232 CCK/W33 + SNW 32	SDAF 22532	9.1	472
22232 CCK/W33 + SNW 32x5.7/16	SAF 22532	8.2	426
22232-2CS5	SNL 532	2.3	136
	SNL 3038	5.3	302
22232-2CS5K + H 3132	SNL 3038	5.1	222
	SNL 532	2.1	98
22232-2CS5K + HA 3132	SNL 532	2.2	118
	SNL 3038	5.2	260
22232-2CS5K + HE 3132	SNL 532	2.2	118
	SNL 3038	5.2	260
22234 CC/W33	SNL 3040	5.3	302
	SONL 234-534	7.3	380
	SAF 22234	8.5	440
	SBDD 2234	10.3	514
	SBDD 2234	10.4	520
22234 CCK/W33 + H 3134	SNL 3040	5.1	222
	SONL 234-534	7.1	370
	SBDD 2234	10.1	504
	SBDD 2234	10.2	508
22234 CCK/W33 + H 3134/5.13/16	SNL 3040	5.2	262
22234 CCK/W33 + H 3134/5.7/8	SNL 3040	5.2	262
22234 CCK/W33 + HA 3134	SNL 3040	5.2	262
	SONL 234-534	7.2	376
22234 CCK/W33 + HE 3134	SNL 3040	5.2	264
22234 CCK/W33 + SNW 34x5.15/16	SAF 22534	8.2	426
22234-2CS5	SNL 3040	5.3	302
22234-2CS5K + H 3134	SNL 3040	5.1	222
22234-2CS5K + H 3134/5.13/16	SNL 3040	5.2	262
22234-2CS5K + H 3134/5.7/8	SNL 3040	5.2	262
22234-2CS5K + HA 3134	SNL 3040	5.2	262
22234-2CS5K + HE 3134	SNL 3040	5.2	264
22236 CC/W33	SNL 3138	5.3	304
	SONL 236-536	7.3	380
	SAF 22236	8.5	440
	SDAF 22236	9.2	474
	SBDD 2236	10.3	516
	SBDD 2236	10.4	522
22236 CCK/W33 + H 3136	SNL 3138	5.1	224
	SONL 236-536	7.1	372
	SBDD 2236	10.1	504
	SBDD 2236	10.2	510
22236 CCK/W33 + H 3136/6.3/8	SNL 3138	5.2	264
22236 CCK/W33 + H 3136/6.5/16	SNL 3138	5.2	264
22236 CCK/W33 + HA 3136	SNL 3138	5.2	266
	SONL 236-536	7.2	376
22236 CCK/W33 + HE 3136	SNL 3138	5.2	266
22236 CCK/W33 + SNW 36	SDAF 22536	9.1	472
22236 CCK/W33 + SNW 36x6.7/16	SAF 22536	8.2	428
22236-2CS5	SNL 3138	5.3	304
22236-2CS5K + H 3136	SNL 3138	5.1	224
22236-2CS5K + H 3136/6.3/8	SNL 3138	5.2	264
22236-2CS5K + H 3136/6.5/16	SNL 3138	5.2	264
22236-2CS5K + HA 3136	SNL 3138	5.2	266
22236-2CS5K + HE 3136	SNL 3138	5.2	266

Bearing designation	Housing / Pillow block / Bearing unit	Product table No.	Page
22238 CC/W33	SNL 3140	5.3	304
	SONL 238-538	7.3	380
	SAF 22238	8.5	442
	SDAF 22238	9.2	474
	SBDD 2238	10.3	516
	SBDD 2238	10.4	522
22238 CCK/W33 + H 3138	SNL 3140	5.1	226
	SONL 238-538	7.1	372
	SBDD 2238	10.1	504
	SBDD 2238	10.2	510
22238 CCK/W33 + H 3138/6.13/16	SNL 3140	5.2	268
22238 CCK/W33 + H 3138/6.7/8	SNL 3140	5.2	270
22238 CCK/W33 + H 3138/7	SNL 3140	5.2	272
22238 CCK/W33 + HA 3138	SNL 3140	5.2	270
	SONL 238-538	7.2	376
22238 CCK/W33 + HE 3138	SNL 3140	5.2	268
22238 CCK/W33 + SNW 38	SDAF 22538	9.1	472
22238 CCK/W33 + SNW 38x6.15/16	SAF 22538	8.2	428
22238-2CS5	SNL 3140	5.3	304
22238-2CS5K + H 3138	SNL 3140	5.1	226
22238-2CS5K + H 3138/6.13/16	SNL 3140	5.2	268
22238-2CS5K + H 3138/6.7/8	SNL 3140	5.2	270
22238-2CS5K + H 3138/7	SNL 3140	5.2	272
22238-2CS5K + HA 3138	SNL 3140	5.2	270
22238-2CS5K + HE 3138	SNL 3140	5.2	268
22240 CC/W33	SNL 3048	5.3	306
	SONL 240-540	7.3	380
	SAF 22240	8.5	442
	SDAF 22240	9.2	474
	SBDD 2240	10.3	516
	SBDD 2240	10.4	522
22240 CCK/W33 + H 3140	SNL 3048	5.1	228
	SONL 240-540	7.1	372
	SBDD 2240	10.1	504
	SBDD 2240	10.2	510
22240 CCK/W33 + H 3140/7.1/4	SNL 3048	5.2	276
22240 CCK/W33 + H 3140/7.1/8	SNL 3048	5.2	274
22240 CCK/W33 + HA 3140	SNL 3048	5.2	274
	SONL 240-540	7.2	376
22240 CCK/W33 + HE 3140	SNL 3048	5.2	272
22240 CCK/W33 + SNW 40	SDAF 22540	9.1	472
22240 CCK/W33 + SNW 40x7.3/16	SAF 22540	8.2	428
22240-2CS5	SNL 3048	5.3	306
22240-2CS5K + H 3140	SNL 3048	5.1	228
22240-2CS5K + H 3140/7.1/4	SNL 3048	5.2	276
22240-2CS5K + H 3140/7.1/8	SNL 3048	5.2	274
22240-2CS5K + HA 3140	SNL 3048	5.2	274
22240-2CS5K + HE 3140	SNL 3048	5.2	272
22244 CC/W33	SNL 3148	5.3	308
	SONL 244-544	7.3	380
	SAF 22244	8.5	442
	SDAF 22244	9.2	474
	SBDD 2244	10.3	516
	SBDD 2244	10.4	522
22244 CCK/W33 + H 3044/7.15/16	SONL 244-544	7.2	376
22244 CCK/W33 + H 3144/7.15/16	SNL 3148	5.2	278
22244 CCK/W33 + H 3144/8	SNL 3148	5.2	278
22244 CCK/W33 + OH 3144 H	SNL 3148	5.1	230
	SONL 244-544	7.1	372
	SBDD 2244	10.1	504
22244 CCK/W33 + OH 3144 HB	SBDD 2244	10.2	510
22244 CCK/W33 + OH 3144/7.13/16 H	SNL 3148	5.2	276
22244 CCK/W33 + OH 3144/7.7/8 H	SNL 3148	5.2	276
22244 CCK/W33 + SNW 44	SDAF 22544	9.1	472
22244 CCK/W33 + SNW 44x7.15/16	SAF 22544	8.2	428
22244-2CS5	SNL 3148	5.3	308
22244-2CS5K + H 3144/7.15/16	SNL 3148	5.2	278
22244-2CS5K + H 3144/8	SNL 3148	5.2	278
22244-2CS5K + OH 3144 H	SNL 3148	5.1	230
22248 CC/W33	SNL 3152	5.3	310
	SONL 248-548	7.3	380
	SBDD 2248	10.3	516
	SBDD 2248	10.4	522

Bearing designation	Housing / Pillow block / Bearing unit	Product table No.	Page
22248 CCK/W33 + H 3148/8.15/16	SNL 3152	5.2	280
	SONL 248-548	7.2	376
22248 CCK/W33 + OH 3148 H	SNL 3152	5.1	232
	SONL 248-548	7.1	372
	SBDD 2248	10.1	504
22248 CCK/W33 + OH 3148 HB	SBDD 2248	10.2	510
22248 CCK/W33 + OH 3148/8.1/2 H	SNL 3152	5.2	280
22248 CCK/W33 + OH 3148/8.7/16	SNL 3152	5.2	278
22252 CC/W33	SNL 3064	5.3	310
	SBDD 2252	10.3	516
	SBDD 2252	10.4	522
22252 CCK/W33 + H 3152/9.1/2	SNL 3064	5.2	282
22252 CCK/W33 + OH 3152 H	SNL 3064	5.1	234
	SBDD 2252	10.1	504
22252 CCK/W33 + OH 3152 HB	SBDD 2252	10.2	510
22256 CC/W33	SNL 3160	5.3	312
	SBDD 2256	10.3	516
	SBDD 2256	10.4	522
22256 CCK/W33 + H 3156/10.1/2	SNL 3160	5.2	284
22256 CCK/W33 + H 3156/10.7/16	SNL 3160	5.2	284
22256 CCK/W33 + OH 3156 H	SNL 3160	5.1	236
	SBDD 2256	10.1	506
22256 CCK/W33 + OH 3156 HB	SBDD 2256	10.2	510
22256 CCK/W33 + OH 3156/10 H	SNL 3160	5.2	282
22260 CC/W33	SNL 3164	5.3	312
	SBDD 2260	10.3	518
	SBDD 2260	10.4	524
22260 CCK/W33 + OH 3160 H	SNL 3164	5.1	238
	SBDD 2260	10.1	506
22260 CCK/W33 + OH 3160 HB	SBDD 2260	10.2	512
22260 CCK/W33 + OH 3160/10.15/16 H	SNL 3164	5.2	286
22260 CCK/W33 + OH 3160/11 H	SNL 3164	5.2	286
22264 CC/W33	SNL 3168	5.3	314
	SBDD 2264	10.3	518
	SBDD 2264	10.4	524
22264 CCK/W33 + H 3164/12	SNL 3168	5.2	288
22264 CCK/W33 + OH 3164 H	SNL 3168	5.1	240
	SBDD 2264	10.1	506
22264 CCK/W33 + OH 3164 HB	SBDD 2264	10.2	512
22264 CCK/W33 + OH 3164/11.1/2 H	SNL 3168	5.2	286
22272 CA/W33	SNL 3180	5.3	316
22272 CAK/W33 + H 3172/13.1/2	SNL 3180	5.2	294
22272 CAK/W33 + OH 3172 H	SNL 3180	5.1	244
22272 CAK/W33 + OH 3172/13 H	SNL 3180	5.2	292
22308 E	SE 510-608	2.3	122
	SAF 22308	8.5	436
22308 EK + H 2308	SE 510-608	2.1	88
22308 EK + HE 2308	SE 510-608	2.2	102
22309 E	SE 511-609	2.3	124
	SAF 22309	8.5	436
22309 EK + H 2309	SE 511-609	2.1	88
22309 EK + HA 2309	SE 511-609	2.2	102
22309 EK + HE 2309	SE 511-609	2.2	104
22309 EK + SNW 109x1.7/16	SAF 22609	8.2	422
22310 E	SE 512-610	2.3	124
	SAF 22310	8.5	436
22310 EK + H 2310	SE 512-610	2.1	88
22310 EK + HA 2310	SE 512-610	2.2	104
22310 EK + HE 2310	SE 512-610	2.2	104
22310 EK + SNW 110x1.11/16	SAF 22610	8.2	422
22311 E	SE 513-611	2.3	126
	SAF 22311	8.5	436
22311 EK + H 2311	SE 513-611	2.1	90
22311 EK + HA 2311	SE 513-611	2.2	106
22311 EK + HE 2311 B	SE 513-611	2.2	106
22311 EK + SNW 111x1.15/16	SAF 22611	8.2	422
22312 E	SE 515-612	2.3	126
	SAF 22312	8.5	436
22312 EK + H 2312	SE 515-612	2.1	90
22313 E	SNL 516-613	2.3	128
	SAF 22313	8.5	436
22313 EK + H 2313	SNL 516-613	2.1	90
22313 EK + HA 2313	SNL 516-613	2.2	106

Bearing designation	Housing / Pillow block / Bearing unit	Product table No.	Page
22313 EK + HE 2313	SNL 516-613	2.2	108
22313 EK + SNW 113x2.3/16	SAF 22613	8.2	422
22314 CC/W33	SAF 22314	8.5	436
22314 E	SNL 517	2.3	128
22315 CC/W33	SAF 22315	8.5	436
22315 CCK/W33 + SNW 115x2.7/16	SAF 22615	8.2	422
22315 E	SNL 518-615	2.3	130
22315 EK + H 2315	SNL 518-615	2.1	92
22315 EK + HA 2315	SNL 518-615	2.2	108
22315 EK + HE 2315	SNL 518-615	2.2	108
22316 CC/W33	SAF 22316	8.5	438
22316 CCK/W33 + SNW 116x2.11/16	SAF 22616	8.2	422
22316 E	SNL 519-616	2.3	130
22316 EK + H 2316	SNL 519-616	2.1	92
22316 EK + HA 2316	SNL 519-616	2.2	110
22316 EK + HE 2316	SNL 519-616	2.2	110
22317 CC/W33	SAF 22317	8.5	438
22317 CCK/W33 + SNW 117x2.15/16	SAF 22617	8.2	424
22317 E	SNL 520-617	2.3	132
	SDAF 22317	9.2	474
22317 EK + H 2317	SNL 520-617	2.1	92
22317 EK + HA 2317	SNL 520-617	2.2	110
22317 EK + HE 2317	SNL 520-617	2.2	112
22317 EK + SNW 117	SDAF 22617	9.1	472
22318 CC/W33	SAF 22318	8.5	438
22318 CCK/W33 + SNW 118x3.3/36	SAF 22618	8.2	424
22319 E	SNL 522-619	2.3	134
22319 EK + H 2319	SNL 522-619	2.1	94
22319 EK + HE 2319	SNL 522-619	2.2	112
22320 CC/W33	SAF 22320	8.5	438
22320 CCK/W33 + SNW 120x3.7/16	SAF 22620	8.2	424
22320 E	SDAF 22320	9.2	474
22320 EK + H 2320	SNL 524-620	2.1	94
22320 EK + HA 2320	SNL 524-620	2.2	114
22320 EK + HE 2320	SNL 524-620	2.2	114
22320 EK + SNW 120	SDAF 22620	9.1	472
22322 CC/W33	SAF 22322	8.5	438
22322 CCK/W33 + SNW 122x3.15/16	SAF 22622	8.2	424
22322 E	SDAF 22322	9.2	474
22322 EK + SNW 122	SDAF 22622	9.1	472
22324 CC/W33	SAF 22324	8.5	440
	SDAF 22324	9.2	474
22324 CCK/W33 + SNW 124	SDAF 22624	9.1	472
22324 CCK/W33 + SNW 124x4.3/16	SAF 22624	8.2	424
22326 CC/W33	SNL 3134	5.3	302
	SAF 22326	8.5	440
	SDAF 22326	9.2	474
22326 CCK/W33 + H 2326	SNL 3134	5.1	222
22326 CCK/W33 + HA 2326	SNL 3134	5.2	260
22326 CCK/W33 + HE 2326	SNL 3134	5.2	260
22326 CCK/W33 + SNW 126	SDAF 22626	9.1	472
22326 CCK/W33 + SNW 126x4.7/16	SAF 22626	8.2	426
22326-2CS5	SNL 3134	5.3	302
22326-2CS5K + H 2326	SNL 3134	5.1	222
22326-2CS5K + HA 2326	SNL 3134	5.2	260
22326-2CS5K + HE 2326	SNL 3134	5.2	260
22328 CC/W33	SNL 3136	5.3	302
	SAF 22328	8.5	440
	SDAF 22328	9.2	474
22328 CCK/W33 + H 2328	SNL 3136	5.1	222
22328 CCK/W33 + HA 2328	SNL 3136	5.2	260
22328 CCK/W33 + HE 2328	SNL 3136	5.2	260
22328 CCK/W33 + SNW 128x4.15/16	SAF 22628	8.2	426
22328-2CS5	SNL 3136	5.3	302
22328-2CS5K + H 2328	SNL 3136	5.1	222
22328-2CS5K + HA 2328	SNL 3136	5.2	260
22328-2CS5K + HE 2328	SNL 3136	5.2	260
22330 CC/W33	SNL 3138	5.3	302
	SAF 22330	8.5	440
	SDAF 22330	9.2	474
22330 CCK/W33 + H 2330	SNL 3138	5.1	222
22330 CCK/W33 + HA 2330	SNL 3138	5.2	260
22330 CCK/W33 + HE 2330	SNL 3138	5.2	260

Bearing designation	Housing / Pillow block / Bearing unit	Product table No.	Page
22330 CCK/W33 + SNW 130x5.3/16	SAF 22630	8.2	426
22330-2CS5	SNL 3138	5.3	302
22330-2CS5K + H 2330	SNL 3138	5.1	222
22330-2CS5K + HA 2330	SNL 3138	5.2	260
22330-2CS5K + HE 2330	SNL 3138	5.2	260
22332 CC/W33	SNL 3140	5.3	302
	SAF 22332	8.5	440
	SDAF 22332	9.2	474
22332 CCK/W33 + H 2332	SNL 3140	5.1	222
22332 CCK/W33 + HA 2332	SNL 3140	5.2	260
22332 CCK/W33 + HE 2332	SNL 3140	5.2	260
22332 CCK/W33 + SNW 132	SDAF 22632	9.1	472
22332 CCK/W33 + SNW 132x5.7/16	SAF 22632	8.2	426
22332-2CS5	SNL 3140	5.3	302
22332-2CS5K + H 2332	SNL 3140	5.1	222
22332-2CS5K + HA 2332	SNL 3140	5.2	260
22332-2CS5K + HE 2332	SNL 3140	5.2	260
22334 CC/W33	SNL 3048	5.3	302
	SAF 22334	8.5	440
	SDAF 22334	9.2	474
22334 CCK/W33 + H 2334	SNL 3048	5.1	222
22334 CCK/W33 + H 2334/5.13/16	SNL 3048	5.2	262
22334 CCK/W33 + H 2334/5.7/8	SNL 3048	5.2	262
22334 CCK/W33 + HA 2334	SNL 3048	5.2	262
22334 CCK/W33 + HE 2334	SNL 3048	5.2	264
22334 CCK/W33 + SNW 134	SDAF 22634	9.1	472
22334 CCK/W33 + SNW 134x5.15/16	SAF 22634	8.2	426
22336 CC/W33	SDAF 22336	9.2	474
22336 CCK/W33 + SNW 136	SDAF 22636	9.1	472
22338 CC/W33	SNL 3148	5.3	304
	SAF 22338	8.5	442
	SDAF 22338	9.2	474
22338 CCK/W33 + H 2338	SNL 3148	5.1	226
22338 CCK/W33 + H 2338/6.13/16	SNL 3148	5.2	268
22338 CCK/W33 + H 2338/6.7/8	SNL 3148	5.2	270
22338 CCK/W33 + H 2338/7	SNL 3148	5.2	272
22338 CCK/W33 + HA 2338	SNL 3148	5.2	270
22338 CCK/W33 + HE 2338	SNL 3148	5.2	268
22338 CCK/W33 + SNW 138	SDAF 22638	9.1	472
22338 CCK/W33 + SNW 138x6.15/16	SAF 22638	8.2	428
22340 CC/W33	SNL 3056	5.3	306
	SAF 22340	8.5	442
22340 CCK/W33 + H 2340	SNL 3056	5.1	228
22340 CCK/W33 + H 2340/7.1/4	SNL 3056	5.2	276
22340 CCK/W33 + H 2340/7.1/8	SNL 3056	5.2	274
22340 CCK/W33 + HA 2340	SNL 3056	5.2	274
22340 CCK/W33 + HE 2340	SNL 3056	5.2	272
22340 CCK/W33 + SNW 140x7.3/16	SAF 22640	8.2	428
22344 CC/W33	SNL 3156	5.3	308
22344 CCK/W33 + H 2344/7.15/16	SNL 3156	5.2	278
22344 CCK/W33 + OH 2344 H	SNL 3156	5.1	230
22348 CC/W33	SNL 3160	5.3	310
22348 CCK/W33 + H 2348/8.15/16	SNL 3160	5.2	280
22348 CCK/W33 + OH 2348 H	SNL 3160	5.1	232
22352 CC/W33	SNL 3164	5.3	310
22352 CCK/W33 + H 2352/9.1/2	SNL 3164	5.2	282
22352 CCK/W33 + OH 2352 H	SNL 3164	5.1	234
22356 CC/W33	SNL 3168	5.3	312
22356 CCK/W33 + H 2356/10.1/2	SNL 3168	5.2	284
22356 CCK/W33 + H 2356/10.7/16	SNL 3168	5.2	284
22356 CCK/W33 + OH 2356 H	SNL 3168	5.1	236
230/500 CA/W33	SNL 30/500	5.3	328
	SDAF 230/500	9.4	482
230/500 CAK/W33 + OH 30/500 H	SNL 30/500	5.1	258
230/500 CAK/W33 + OH 30/500/18.1/2 H	SNL 30/500	5.2	300
230/500 CAK/W33 + SNP 30/500 x 181/2	SDAF 230/500 KA x 181/2	9.3	478
230/530 CA/W33	SNL 30/530	5.3	328
	SDAF 230/530	9.4	482
	SKND 30/530	14.1	634
230/530 CAK/W33	SDM 30/530	13.5	614
	SDM 30/530	13.6	618
230/530 CAK/W33 + OH 30/530 H	SNL 30/530	5.1	258
230/530 CAK/W33 + OH 30/530/19.1/2 H	SNL 30/530	5.2	300

Bearing designation	Housing / Pillow block / Bearing unit	Product table No.	Page
230/530 CAK/W33 + SNP 30/530 x 191/2	SDAF 230/530 KA x 191/2	9.3	478
230/560 CAK/W33 + OH 30/560 H	SED 30/560	6.1	332
230/600 CA/W33	SKND 30/600	14.1	634
230/600 CAK/W33	SDM 30/600	13.5	614
	SDM 30/600	13.6	618
230/600 CAK/W33 + OH 30/600 H	SED 30/600	6.1	332
230/630 CAK/W33 + OH 30/630 H	SED 30/630	6.1	332
230/670 CA/W33	SKND 30/670	14.1	634
230/670 CAK/W33	SDM 30/670	13.5	616
	SDM 30/670	13.6	620
230/670 CAK/W33 + OH 30/670 H	SED 30/670	6.1	332
230/710 CAK/W33 + OH 30/710 H	SED 30/710	6.1	332
230/750 CAK/W33 + OH 30/750 H	SED 30/750	6.1	332
230/800 CAK/W33 + OH 30/800 H	SED 30/800	6.1	332
230/850 CAK/W33 + OH 30/850 H	SED 30/850	6.1	334
230/900 CAK/W33 + OH 30/900 H	SED 30/900	6.1	334
230/950 CAK/W33 + OH 30/950 H	SED 30/950	6.1	334
23024 CC/W33	SNLN 3024	4.2	180
	SBDD 3024	10.3	514
	SBDD 3024	10.4	520
23024 CCK/W33 + H 3024	SNLN 3024	4.1	176
	SBDD 3024	10.1	502
	SBDD 3024	10.2	508
23024 CCK/W33 + SNW 3024x4.3/16	SAF 23024 KA x 4.3/16	8.2	424
23024-2CS5	SNLN 3024	4.2	180
23026 CC/W33	SNLN 3026	4.2	180
	SBDD 3026	10.3	514
	SBDD 3026	10.4	520
23026 CCK/W33 + H 3026	SNLN 3026	4.1	176
	SBDD 3026	10.1	502
	SBDD 3026	10.2	508
23026 CCK/W33 + SNW 3026x4.7/16	SAF 23026 KA x 4.7/16	8.2	426
23026-2CS5	SNLN 3026	4.2	180
23026-2CS5K + H 3026 E	SNLN 3026	4.1	176
23028 CC/W33	SNLN 3028	4.2	180
	SBDD 3028	10.3	514
	SBDD 3028	10.4	520
23028 CCK/W33 + H 3028	SNLN 3028	4.1	176
	SBDD 3028	10.1	502
	SBDD 3028	10.2	508
23028 CCK/W33 + SNW 3028x4.15/16	SAF 23028 KA x 4.15/16	8.2	426
23028-2CS5	SNLN 3028	4.2	180
23028-2CS5K + H 3028 E	SNLN 3028	4.1	176
23030 CC/W33	SNLN 3030	4.2	180
	SBDD 3030	10.3	514
	SBDD 3030	10.4	520
23030 CCK/W33 + H 3030	SNLN 3030	4.1	176
	SBDD 3030	10.1	502
	SBDD 3030	10.2	508
	THDD 3030	10.5	526
23030 CCK/W33 + SNW 3030x5.3/16	SAF 23030 KA x 5.3/16	8.2	426
23030-2CS5	SNLN 3030	4.2	180
23030-2CS5K + H 3030 E	SNLN 3030	4.1	176
23032 CC/W33	SNLN 3032	4.2	182
	SBDD 3032	10.3	514
	SBDD 3032	10.4	520
23032 CCK/W33 + H 3032	SNLN 3032	4.1	176
	SBDD 3032	10.1	502
	SBDD 3032	10.2	508
23032 CCK/W33 + SNW 3032x5.7/16	SAF 23032 KA x 5.7/16	8.2	426
23032-2CS5	SNLN 3032	4.2	182
23032-2CS5K + H 3032 E	SNLN 3032	4.1	176
23034 CC/W33	SNLN 3034	4.2	182
	SBDD 3034	10.3	514
	SBDD 3034	10.4	520
23034 CCK/W33 + H 3034	SNLN 3034	4.1	178
	SBDD 3034	10.1	504
	SBDD 3034	10.2	508
	THDD 3034	10.5	526
23034 CCK/W33 + SNW 3034x5.15/16	SAF 23034 KA x 5.15/16	8.2	426
23034-2CS5	SNLN 3034	4.2	182
23034-2CS5K + H 3034 E	SNLN 3034	4.1	178

Bearing designation	Housing / Pillow block / Bearing unit	Product table No.	Page
23036 CC/W33	SNLN 3036	4.2	182
	SNL 3036	5.3	304
	SBDD 3036	10.3	516
	SBDD 3036	10.4	522
23036 CCK/W33 + H 3036	SNLN 3036	4.1	178
	SNL 3036	5.1	224
	SBDD 3036	10.1	504
	SBDD 3036	10.2	510
23036 CCK/W33 + H 3036/6.3/8	SNL 3036	5.2	264
23036 CCK/W33 + H 3036/6.5/16	SNL 3036	5.2	264
23036 CCK/W33 + HA 3036	SNL 3036	5.2	266
23036 CCK/W33 + HE 3036	SNL 3036	5.2	266
23036 CCK/W33 + SNW 3036x6.7/16	SAF 23036 KA x 6.7/16	8.2	428
23036-2CS5	SNLN 3036	4.2	182
	SNL 3036	5.3	304
23036-2CS5K + H 3036 E	SNLN 3036	4.1	178
	SNL 3036	5.1	224
23036-2CS5K + H 3036/6.3/8 E	SNL 3036	5.2	264
23036-2CS5K + H 3036/6.5/16 E	SNL 3036	5.2	264
23036-2CS5K + HA 3036 E	SNL 3036	5.2	266
23036-2CS5K + HE 3036 E	SNL 3036	5.2	266
23038 CC/W33	SNLN 3038	4.2	182
	SNL 3038	5.3	304
	SBDD 3038	10.3	516
	SBDD 3038	10.4	522
23038 CCK/W33 + H 3038	SNLN 3038	4.1	178
	SNL 3038	5.1	226
	SBDD 3038	10.1	504
	SBDD 3038	10.2	510
	THDD 3038	10.5	526
23038 CCK/W33 + H 3038/6.13/16	SNL 3038	5.2	268
23038 CCK/W33 + H 3038/6.7/8	SNL 3038	5.2	270
23038 CCK/W33 + H 3038/7	SNL 3038	5.2	272
23038 CCK/W33 + HA 3038	SNL 3038	5.2	270
23038 CCK/W33 + HE 3038	SNL 3038	5.2	268
23038 CCK/W33 + SNW 3038x6.15/16	SAF 23038 KA x 6.15/16	8.2	428
23040 CC/W33	SNLN 3040	4.2	182
	SNL 3040	5.3	306
	SBDD 3040	10.3	516
	SBDD 3040	10.4	522
23040 CCK/W33 + H 3040	SNLN 3040	4.1	178
	SNL 3040	5.1	228
	SBDD 3040	10.1	504
	SBDD 3040	10.2	510
	THDD 3040	10.5	528
23040 CCK/W33 + H 3040/7.1/4	SNL 3040	5.2	276
23040 CCK/W33 + H 3040/7.1/8	SNL 3040	5.2	274
23040 CCK/W33 + HA 3040	SNL 3040	5.2	274
23040 CCK/W33 + HE 3040	SNL 3040	5.2	272
23040 CCK/W33 + SNW 3040x7.3/16	SAF 23040 KA x 7.3/16	8.2	428
23040-2CS5	SNLN 3040	4.2	182
	SNL 3040	5.3	306
23040-2CS5K + H 3040	SNLN 3040	4.1	178
	SNL 3040	5.1	228
23040-2CS5K + H 3040/7.1/4	SNL 3040	5.2	276
23040-2CS5K + H 3040/7.1/8	SNL 3040	5.2	274
23040-2CS5K + HA 3040	SNL 3040	5.2	274
23040-2CS5K + HE 3040	SNL 3040	5.2	272
23044 CC/W33	SNLN 3044	4.2	182
	SNL 3044	5.3	308
	SBDD 3044	10.3	516
	SBDD 3044	10.4	522
23044 CCK/W33 + H 3044/7.15/16	SNL 3044	5.2	278
23044 CCK/W33 + H 3044/8	SNL 3044	5.2	278
23044 CCK/W33 + OH 3044 H	SNLN 3044	4.1	178
	SNL 3044	5.1	230
	SBDD 3044	10.1	504
	THDD 3044	10.5	528
23044 CCK/W33 + OH 3044 HB	SBDD 3044	10.2	510
23044 CCK/W33 + OH 3044/7.13/16 H	SNL 3044	5.2	276
23044 CCK/W33 + OH 3044/7.7/8 H	SNL 3044	5.2	276
23044 CCK/W33 + SNW 3044x7.15/16	SAF 23044 KA x 7.15/16	8.2	428

18.3 Bearing index

Bearing designation	Housing / Pillow block / Bearing unit	Product table No.	Page
23044-2CS5	SNLN 3044	4.2	182
	SNL 3044	5.3	308
23044-2CS5K + H 3044/7.15/16	SNL 3044	5.2	278
23044-2CS5K + H 3044/8	SNL 3044	5.2	278
23044-2CS5K + OH 3044 H	SNLN 3044	4.1	178
	SNL 3044	5.1	230
23044-2CS5K + OH 3044/7.13/16 H	SNL 3044	5.2	276
23044-2CS5K + OH 3044/7.7/8 H	SNL 3044	5.2	276
23048 CC/W33	SNLN 3048	4.2	182
	SNL 3048	5.3	310
	SBDD 3048	10.3	516
	SBDD 3048	10.4	522
23048 CCK/W33 + H 3048/8.15/16	SNL 3048	5.2	280
23048 CCK/W33 + OH 3048 H	SNLN 3048	4.1	178
	SNL 3048	5.1	232
	SBDD 3048	10.1	504
23048 CCK/W33 + OH 3048 HB	SBDD 3048	10.2	510
23048 CCK/W33 + OH 3048/8.1/2 H	SNL 3048	5.2	280
23048 CCK/W33 + OH 3048/8.7/16 H	SNL 3048	5.2	278
23048 CCK/W33 + SNP 3048x8.15/16	SAF 23048 KA x 8.15/16	8.2	428
23048-2CS5	SNLN 3048	4.2	182
	SNL 3048	5.3	310
23048-2CS5K + H 3048/8.15/16 E	SNL 3048	5.2	280
23048-2CS5K + OH 3048 HE	SNLN 3048	4.1	178
	SNL 3048	5.1	232
23048-2CS5K + OH 3048/8.1/2 HE	SNL 3048	5.2	280
23048-2CS5K + OH 3048/8.7/16 HE	SNL 3048	5.2	278
23052 CC/W33	SNLN 3052	4.2	182
	SNL 3052	5.3	310
	SBDD 3052	10.3	516
	SBDD 3052	10.4	522
23052 CCK/W33 + H 3052/9.1/2	SNL 3052	5.2	282
23052 CCK/W33 + OH 3052 H	SNLN 3052	4.1	178
	SNL 3052	5.1	234
	SBDD 3052	10.1	504
	THDD 3052	10.5	528
23052 CCK/W33 + OH 3052 HB	SBDD 3052	10.2	510
23052 CCK/W33 + OH 3052/9.7/16 H	SNL 3052	5.2	280
23052 CCK/W33 + SNP 3052x9.7/16	SAF 23052 KA x 9.7/16	8.2	428
23052-2CS5	SNLN 3052	4.2	182
	SNL 3052	5.3	310
23052-2CS5K + H 3052/9.1/2 E	SNL 3052	5.2	282
23052-2CS5K + OH 3052 HE	SNLN 3052	4.1	178
	SNL 3052	5.1	234
23052-2CS5K + OH 3052/9.7/16 HE	SNL 3052	5.2	280
23056 CACK/W33 + SNP 3056x10.7/16	SAF 23056 KA x 10.7/16	8.2	428
23056 CACK/W33 + SNP 3056x9.15/16	SAF 23056 KA x 9.15/16	8.2	428
23056 CC/W33	SNLN 3056	4.2	182
	SNL 3056	5.3	312
	SBDD 3056	10.3	516
	SBDD 3056	10.4	522
23056 CCK/W33 + H 3056/10.1/2	SNL 3056	5.2	284
23056 CCK/W33 + H 3056/10.7/16	SNL 3056	5.2	284
23056 CCK/W33 + OH 3056 H	SNLN 3056	4.1	178
	SNL 3056	5.1	236
	SBDD 3056	10.1	506
23056 CCK/W33 + OH 3056 HB	SBDD 3056	10.2	510
23056 CCK/W33 + OH 3056/10 H	SNL 3056	5.2	282
23056 CCK/W33 + OH 3056/9.15/16 H	SNL 3056	5.2	282
23060 CAC/W33	SDAF 23060	9.4	480
23060 CACK/W33 + SNP 3060 x 1015/16	SDAF 23060 KA x 1015/16	9.3	476
23060 CC/W33	SNL 3060	5.3	312
	SBDD 3060	10.3	518
	SBDD 3060	10.4	524
23060 CCK/W33 + OH 3060 H	SNL 3060	5.1	238
	SBDD 3060	10.1	506
23060 CCK/W33 + OH 3060 HB	SBDD 3060	10.2	512
23060 CCK/W33 + OH 3060/10.15/16 H	SNL 3060	5.2	286
23060 CCK/W33 + OH 3060/11 H	SNL 3060	5.2	286
23064 CC/W33	SNL 3064	5.3	314
	SDAF 23064	9.4	480
	SBDD 3064	10.3	518
	SBDD 3064	10.4	524

Bearing designation	Housing / Pillow block / Bearing unit	Product table No.	Page
23064 CCK/W33 + H 3064/11.15/16	SNL 3064	5.2	288
23064 CCK/W33 + H 3064/12	SNL 3064	5.2	288
23064 CCK/W33 + OH 3064 H	SNL 3064	5.1	240
	SBDD 3064	10.1	506
23064 CCK/W33 + OH 3064 HB	SBDD 3064	10.2	512
23064 CCK/W33 + OH 3064/11.1/2 H	SNL 3064	5.2	286
23064 CCK/W33 + OH 3064/11.7/16 H	SNL 3064	5.2	286
23064 CCK/W33 + SNP 3064 x 1115/16	SDAF 23064 KA x 1115/16	9.3	476
23064 CCK/W33 + SNP 3064 x 117/16	SDAF 23064 KA x 117/16	9.3	476
23068 CAC/W33	SDAF 23068	9.4	480
23068 CACK/W33 + SNP 3068 x 127/16	SDAF 23068 KA x 127/16	9.3	476
23068 CC/W33	SNL 3068	5.3	314
	SBDD 3068	10.3	518
	SBDD 3068	10.4	524
23068 CCK/W33	SDM 3068	13.5	614
	SDM 3068	13.6	618
23068 CCK/W33 + OH 3068 H	SNL 3068	5.1	242
	SBDD 3068	10.1	506
23068 CCK/W33 + OH 3068 HB	SBDD 3068	10.2	512
23068 CCK/W33 + OH 3068/12.1/2 H	SNL 3068	5.2	290
23068 CCK/W33 + OH 3068/12.7/16 H	SNL 3068	5.2	290
23072 CAC/W33	SDAF 23072	9.4	480
23072 CACK/W33 + SNP 3072 x 1215/16	SDAF 23072 KA x 1215/16	9.3	476
23072 CACK/W33 + SNP 3072 x 137/16	SDAF 23072 KA x 137/16	9.3	476
23072 CC/W33	SNL 3072	5.3	316
	SBDD 3072	10.3	518
	SBDD 3072	10.4	524
23072 CCK/W33 + H 3072/13.1/2	SNL 3072	5.2	294
23072 CCK/W33 + H 3072/13.7/16	SNL 3072	5.2	292
23072 CCK/W33 + OH 3072 H	SNL 3072	5.1	244
	SBDD 3072	10.1	506
23072 CCK/W33 + OH 3072 HB	SBDD 3072	10.2	512
23072 CCK/W33 + OH 3072/12.15/16 H	SNL 3072	5.2	292
23072 CCK/W33 + OH 3072/13 H	SNL 3072	5.2	292
23076 CAC/W33	SDAF 23076	9.4	480
23076 CACK/W33 + SNP 3076 x 1315/16	SDAF 23076 KA x 1315/16	9.3	476
23076 CC/W33	SNL 3076	5.3	318
	SBDD 3076	10.3	518
	SBDD 3076	10.4	524
23076 CCK/W33	SDM 3076	13.5	614
	SDM 3076	13.6	618
23076 CCK/W33 + OH 3076 H	SNL 3076	5.1	246
	SBDD 3076	10.1	506
23076 CCK/W33 + OH 3076 HB	SBDD 3076	10.2	512
23076 CCK/W33 + OH 3076/13.15/16 H	SNL 3076	5.2	294
23076 CCK/W33 + OH 3076/14 H	SNL 3076	5.2	296
23080 CAC/W33	SDAF 23080	9.4	480
23080 CACK/W33 + SNP 3080 x 15	SDAF 23080 KA x 15	9.3	478
23080 CC/W33	SNL 3080	5.3	320
	SBDD 3080	10.3	518
	SBDD 3080	10.4	524
23080 CCK/W33 + H 3080/15	SNL 3080	5.2	296
23080 CCK/W33 + OH 3080 H	SNL 3080	5.1	248
	SBDD 3080	10.1	506
23080 CCK/W33 + OH 3080 HB	SBDD 3080	10.2	512
23084 CA/W33	SNL 3084	5.3	322
	SDAF 23084	9.4	480
	SBDD 3084	10.3	518
	SBDD 3084	10.4	524
23084 CAK/W33	SDM 3084	13.5	614
	SDM 3084	13.6	618
23084 CAK/W33 + H 3084/15.3/4	SNL 3084	5.2	298
23084 CAK/W33 + OH 3084 H	SNL 3084	5.1	250
	SBDD 3084	10.1	506
23084 CAK/W33 + OH 3084 HB	SBDD 3084	10.2	512
23084 CAK/W33 + SNP 3084 x 153/4	SDAF 23084 KA x 153/4	9.3	478
23088 CA/W33	SNL 3088	5.3	324
	SDAF 23088	9.4	482
23088 CAK/W33 + OH 3088 H	SNL 3088	5.1	252
23088 CAK/W33 + OH 3088/16.1/2 H	SNL 3088	5.2	298
23088 CAK/W33 + SNP 3088 x 161/2	SDAF 23088 KA x 161/2	9.3	478
23092 CA/W33	SNL 3092	5.3	326
	SDAF 23092	9.4	482

Bearing designation	Housing / Pillow block / Bearing unit	Product table No.	Page
23092 CAK/W33	SDM 3092	13.5	614
	SDM 3092	13.6	618
23092 CAK/W33 + OH 3092 H	SNL 3092	5.1	254
23092 CAK/W33 + OH 3092/17 H	SNL 3092	5.2	300
23092 CAK/W33 + SNP 3092 x 17	SDAF 23092 KA x 17	9.3	478
23096 CA/W33	SNL 3096	5.3	326
	SDAF 23096	9.4	482
23096 CAK/W33 + OH 3096 H	SNL 3096	5.1	256
23096 CAK/W33 + OH 3096/18 H	SNL 3096	5.2	300
23096 CAK/W33 + SNP 3096 x 18	SDAF 23096 KA x 18	9.3	478
231/500 CAK/W33 + OH 31/500 H	SED 31/500	6.1	332
231/530 CAK/W33	SDM 31/530	13.5	614
	SDM 31/530	13.6	618
231/530 CAK/W33 + OH 31/530 H	SED 31/530	6.1	332
231/560 CAK/W33 + OH 31/560 H	SED 31/560	6.1	332
231/600 CAK/W33 + OH 31/600 H	SED 31/600	6.1	332
231/630 CAK/W33	SDM 31/630	13.5	616
	SDM 31/630	13.6	620
231/630 CAK/W33 + OH 31/630 H	SED 31/630	6.1	332
231/670 CAK/W33 + OH 31/670 H	SED 31/670	6.1	332
231/710 CAK/W33 + OH 31/710 H	SED 31/710	6.1	332
231/750 CAK/W33 + OH 31/750 H	SED 31/750	6.1	332
231/800 CAK/W33 + OH 31/800 H	SED 31/800	6.1	332
231/850 CAK/W33 + OH 31/850 H	SED 31/850	6.1	334
23122 CC/W33	SBDD 3122	10.3	514
	SBDD 3122	10.4	520
23122 CCK/W33 + H 3122	SBDD 3122	10.1	502
	SBDD 3122	10.2	508
23124 CC/W33	SBDD 3124	10.3	514
	SBDD 3124	10.4	520
23124 CCK/W33 + H 3124	SBDD 3124	10.1	502
	SBDD 3124	10.2	508
23126 CC/W33	SBDD 3126	10.3	514
	SBDD 3126	10.4	520
23126 CCK/W33 + H 3126	SBDD 3126	10.1	502
	SBDD 3126	10.2	508
23128 CC/W33	SBDD 3128	10.3	514
	SBDD 3128	10.4	520
23128 CCK/W33 + H 3128	SBDD 3128	10.1	502
	SBDD 3128	10.2	508
23130 CC/W33	SBDD 3130	10.3	514
	SBDD 3130	10.4	520
23130 CCK/W33 + H 3130	SBDD 3130	10.1	502
	SBDD 3130	10.2	508
23132 CC/W33	SBDD 3132	10.3	514
	SBDD 3132	10.4	520
23132 CCK/W33 + H 3132	SBDD 3132	10.1	502
	SBDD 3132	10.2	508
	THDD 3132	10.5	526
23134 CC/W33	SNL 3134	5.3	302
	SBDD 3134	10.3	514
	SBDD 3134	10.4	520
23134 CCK/W33 + H 3134	SNL 3134	5.1	222
	SBDD 3134	10.1	504
	SBDD 3134	10.2	508
	THDD 3134	10.5	526
23134 CCK/W33 + HA 3134	SNL 3134	5.2	262
23134 CCK/W33 + HE 3134	SNL 3134	5.2	264
23134-2CS5	SNL 3134	5.3	302
23134-2CS5K + H 3134 E	SNL 3134	5.1	222
23134-2CS5K + HA 3134	SNL 3134	5.2	262
23134-2CS5K + HE 3134	SNL 3134	5.2	264
23136 CC/W33	SNL 3136	5.3	304
	SBDD 3136	10.3	516
	SBDD 3136	10.4	522
23136 CCK/W33	SBPN 3136	13.1	606
	ASBPN 3136	13.2	608
	SBPN 3136	13.3	610
	ASBPN 3136	13.4	612
23136 CCK/W33 + H 3136	SNL 3136	5.1	224
	SBDD 3136	10.1	504
	SBDD 3136	10.2	510
	THDD 3136	10.5	526

Bearing designation	Housing / Pillow block / Bearing unit	Product table No.	Page
23136 CCK/W33 + HA 3136	SNL 3136	5.2	266
23136 CCK/W33 + HE 3136	SNL 3136	5.2	266
23136-2CS5	SNL 3136	5.3	304
23136-2CS5K + H 3136 L	SNL 3136	5.1	224
23136-2CS5K + HA 3136 L	SNL 3136	5.2	266
23136-2CS5K + HE 3136 L	SNL 3136	5.2	266
23138 CC/W33	SNL 3138	5.3	304
	SBDD 3138	10.3	516
	SBDD 3138	10.4	522
23138 CCK/W33 + H 3138	SNL 3138	5.1	226
	SBDD 3138	10.1	504
	SBDD 3138	10.2	510
	THDD 3138	10.5	526
23138 CCK/W33 + HA 3138	SNL 3138	5.2	270
23138 CCK/W33 + HE 3138	SNL 3138	5.2	268
23138-2CS5	SNL 3138	5.3	304
23138-2CS5K + H 3138	SNL 3138	5.1	226
23138-2CS5K + HA 3138 L	SNL 3138	5.2	270
23138-2CS5K + HE 3138 L	SNL 3138	5.2	268
23140 CC/W33	SNL 3140	5.3	306
	SBDD 3140	10.3	516
	SBDD 3140	10.4	522
23140 CCK/W33	SBPN 3140	13.1	606
	SBPN 3140	13.3	610
23140 CCK/W33 + H 3140	SNL 3140	5.1	228
	SBDD 3140	10.1	504
	SBDD 3140	10.2	510
	THDD 3140	10.5	528
23140 CCK/W33 + HA 3140	SNL 3140	5.2	274
23140 CCK/W33 + HE 3140	SNL 3140	5.2	272
23140-2CS5	SNL 3140	5.3	306
23140-2CS5K + H 3140	SNL 3140	5.1	228
23140-2CS5K + HA 3140	SNL 3140	5.2	274
23140-2CS5K + HE 3140	SNL 3140	5.2	272
23144 CC/W33	SNL 3144	5.3	308
	SBDD 3144	10.3	516
	SBDD 3144	10.4	522
23144 CCK/W33	SBPN 3144	13.1	606
	ASBPN 3144	13.2	608
	SBPN 3144	13.3	610
	ASBPN 3144	13.4	612
23144 CCK/W33 + H 3144/7.15/16	SNL 3144	5.2	278
23144 CCK/W33 + OH 3144 H	SNL 3144	5.1	230
	SBDD 3144	10.1	504
	THDD 3144	10.5	528
23144 CCK/W33 + OH 3144 HB	SBDD 3144	10.2	510
23144-2CS5	SNL 3144	5.3	308
23144-2CS5K + H 3144/7.15/16 TL	SNL 3144	5.2	278
23144-2CS5K + OH 3144 HTL	SNL 3144	5.1	230
23148 CC/W33	SNL 3148	5.3	310
	SBDD 3148	10.3	516
	SBDD 3148	10.4	522
23148 CCK/W33	SBPN 3148	13.1	606
	SBPN 3148	13.3	610
23148 CCK/W33 + H 3148/8.15/16	SNL 3148	5.2	280
23148 CCK/W33 + OH 3148 H	SNL 3148	5.1	232
	SBDD 3148	10.1	504
	THDD 3148	10.5	528
23148 CCK/W33 + OH 3148 HB	SBDD 3148	10.2	510
23148-2CS5	SNL 3148	5.3	310
23148-2CS5K + H 3148/8.15/16 TL	SNL 3148	5.2	280
23148-2CS5K + OH 3148 HTL	SNL 3148	5.1	232
23152 CAC/W33	SDAF 23152	9.4	480
23152 CACK/W33 + SNP 3152 x 97/16	SDAF 23152 KA x 97/16	9.3	476
23152 CC/W33	SNL 3152	5.3	310
	SBDD 3152	10.3	516
	SBDD 3152	10.4	522
23152 CCK/W33	SBPN 3152	13.1	606
	ASBPN 3152	13.2	608
	SBPN 3152	13.3	610
	ASBPN 3152	13.4	612
23152 CCK/W33 + H 3152/9.1/2	SNL 3152	5.2	282

Bearing designation	Housing / Pillow block / Bearing unit	Product table No.	Page
23152 CCK/W33 + OH 3152 H	SNL 3152	5.1	234
	SBDD 3152	10.1	504
	THDD 3152	10.5	528
23152 CCK/W33 + OH 3152 HB	SBDD 3152	10.2	510
23152 CCK/W33 + OH 3152/9.7/16 H	SNL 3152	5.2	280
23152-2CS5	SNL 3152	5.3	310
23152-2CS5K + H 3152/9.1/2 TL	SNL 3152	5.2	282
23152-2CS5K + OH 3152 HTL	SNL 3152	5.1	234
23152-2CS5K + OH 3152/9.7/16 HTL	SNL 3152	5.2	280
23156 CAC/W33	SDAF 23156	9.4	480
23156 CACK/W33 + SNP 3156 x 107/16	SDAF 23156 KA x 107/16	9.3	476
23156 CC/W33	SNL 3156	5.3	312
	SBDD 3156	10.3	516
	SBDD 3156	10.4	522
23156 CCK/W33 + H 3156/10.1/2	SNL 3156	5.2	284
23156 CCK/W33 + H 3156/10.7/16	SNL 3156	5.2	284
23156 CCK/W33 + OH 3156 H	SNL 3156	5.1	236
	SBDD 3156	10.1	506
23156 CCK/W33 + OH 3156 HB	SBDD 3156	10.2	510
23156 CCK/W33 + OH 3156/10 H	SNL 3156	5.2	282
23156-2CS5	SNL 3156	5.3	312
23156-2CS5K + H 3156/10.1/2 TL	SNL 3156	5.2	284
23156-2CS5K + H 3156/10.7/16 TL	SNL 3156	5.2	284
23156-2CS5K + OH 3156 HTL	SNL 3156	5.1	236
23156-2CS5K + OH 3156/10 HTL	SNL 3156	5.2	282
23160 CAC/W33	SDAF 23160	9.4	480
23160 CACK/W33 + SNP 3160 x 1015/16	SDAF 23160 KA x 1015/16	9.3	476
23160 CC/W33	SNL 3160	5.3	312
	SBDD 3160	10.3	518
	SBDD 3160	10.4	524
23160 CCK/W33	SBPN 3160	13.1	606
	ASBPN 3160	13.2	608
	SBPN 3160	13.3	610
	ASBPN 3160	13.4	612
23160 CCK/W33 + OH 3160 H	SNL 3160	5.1	238
	SBDD 3160	10.1	506
	THDD 3160	10.5	528
23160 CCK/W33 + OH 3160 HB	SBDD 3160	10.2	512
23160 CCK/W33 + OH 3160/10.15/16 H	SNL 3160	5.2	286
23160 CCK/W33 + OH 3160/11 H	SNL 3160	5.2	286
23160-2CS5	SNL 3160	5.3	312
23160-2CS5K + OH 3160 HE	SNL 3160	5.1	238
23160-2CS5K + OH 3160/10.15/16 HE	SNL 3160	5.2	286
23160-2CS5K + OH 3160/11 HE	SNL 3160	5.2	286
23164 CAC/W33	SDAF 23164	9.4	480
23164 CACK/W33 + SNP 3164 x 1115/16	SDAF 23164 KA x 1115/16	9.3	476
23164 CC/W33	SNL 3164	5.3	314
	SBDD 3164	10.3	518
	SBDD 3164	10.4	524
23164 CCK/W33	SBPN 3164	13.1	606
	ASBPN 3164	13.2	608
	SBPN 3164	13.3	610
	ASBPN 3164	13.4	612
23164 CCK/W33 + H 3164/11.15/16	SNL 3164	5.2	288
23164 CCK/W33 + H 3164/12	SNL 3164	5.2	288
23164 CCK/W33 + OH 3164 H	SNL 3164	5.1	240
	SBDD 3164	10.1	506
	THDD 3164	10.5	528
23164 CCK/W33 + OH 3164 HB	SBDD 3164	10.2	512
23164-2CS5	SNL 3164	5.3	314
23164-2CS5K + H 3164/11.15/16	SNL 3164	5.2	288
23164-2CS5K + H 3164/12	SNL 3164	5.2	288
23164-2CS5K + OH 3164 H	SNL 3164	5.1	240
23168 CAC/W33	SDAF 23168	9.4	480
23168 CACK/W33 + SNP 3168 x 127/16	SDAF 23168 KA x 127/16	9.3	476
23168 CC/W33	SNL 3168	5.3	314
	SBDD 3168	10.3	518
	SBDD 3168	10.4	524
23168 CCK/W33	SDM 3168	13.5	614
	SDM 3168	13.6	618
23168 CCK/W33 + OH 3168 H	SNL 3168	5.1	242
	SBDD 3168	10.1	506
	THDD 3168	10.5	528

Bearing designation	Housing / Pillow block / Bearing unit	Product table No.	Page
23168 CCK/W33 + OH 3168 HB	SBDD 3168	10.2	512
23168 CCK/W33 + OH 3168/12.1/2 H	SNL 3168	5.2	290
23168 CCK/W33 + OH 3168/12.7/16 H	SNL 3168	5.2	290
23168-2CS5	SNL 3168	5.3	314
23168-2CS5K + OH 3168 HE	SNL 3168	5.1	242
23168-2CS5K + OH 3168/12.1/2 HE	SNL 3168	5.2	290
23168-2CS5K + OH 3168/12.7/16 HE	SNL 3168	5.2	290
23172 CC/W33	SNL 3172	5.3	316
	SDAF 23172	9.4	480
	SBDD 3172	10.3	518
	SBDD 3172	10.4	524
23172 CCK/W33 + H 3172/13.1/2	SNL 3172	5.2	294
23172 CCK/W33 + H 3172/13.7/16	SNL 3172	5.2	292
23172 CCK/W33 + OH 3172 H	SNL 3172	5.1	244
	SBDD 3172	10.1	506
23172 CCK/W33 + OH 3172 HB	SBDD 3172	10.2	512
23172 CCK/W33 + SNP 3172 x 137/16	SDAF 23172 KA x 137/16	9.3	476
23172-2CS5	SNL 3172	5.3	316
23172-2CS5K + OH 3172 HE	SNL 3172	5.1	244
23176 CA/W33	SNL 3176	5.3	318
	SDAF 23176	9.4	480
	SBDD 3176	10.3	518
	SBDD 3176	10.4	524
23176 CAK/W33 + OH 3176 H	SNL 3176	5.1	246
	SBDD 3176	10.1	506
	THDD 3176	10.5	528
23176 CAK/W33 + OH 3176 HB	SBDD 3176	10.2	512
23176 CAK/W33 + OH 3176/13.15/16 H	SNL 3176	5.2	294
23176 CAK/W33 + OH 3176/14 H	SNL 3176	5.2	296
23176 CAK/W33 + SNP 3176 x 1315/16	SDAF 23176 KA x 1315/16	9.3	476
23180 CA/W33	SNL 3180	5.3	320
	SDAF 23180	9.4	480
	SBDD 3180	10.3	518
	SBDD 3180	10.4	524
23180 CAK/W33 + H 3180/15	SNL 3180	5.2	296
23180 CAK/W33 + OH 3180 H	SNL 3180	5.1	248
	SBDD 3180	10.1	506
23180 CAK/W33 + OH 3180 HB	SBDD 3180	10.2	512
23180 CAK/W33 + SNP 3180 x 1415/16	SDAF 23180 KA x 1415/16	9.3	476
23180-2CS5	SNL 3180	5.3	320
23180-2CS5K + OH 3180 HE	SNL 3180	5.1	248
23184 CA/W33	SDAF 23184	9.4	480
23184 CAK/W33 + SNP 3184 x 153/4	SDAF 23184 KA x 153/4	9.3	478
23184 CJ/W33	SNL 3184	5.3	322
	SBDD 3184	10.3	518
	SBDD 3184	10.4	524
23184 CKJ/W33	SDM 3184	13.5	614
	SDM 3184	13.6	618
23184 CKJ/W33 + H 3184/15.3/4	SNL 3184	5.2	298
23184 CKJ/W33 + OH 3184 H	SNL 3184	5.1	250
	SBDD 3184	10.1	506
23184 CKJ/W33 + OH 3184 HB	SBDD 3184	10.2	512
23188 CA/W33	SNL 3188	5.3	324
	SDAF 23188	9.4	482
23188 CAK/W33 + OH 3188 H	SNL 3188	5.1	252
23188 CAK/W33 + OH 3188/16.1/2 H	SNL 3188	5.2	298
23188 CAK/W33 + SNP 3188 x 161/2	SDAF 23188 KA x 161/2	9.3	478
23192 CA/W33	SNL 3192	5.3	326
	SDAF 23192	9.4	482
23192 CAK/W33 + OH 3192 H	SNL 3192	5.1	254
23192 CAK/W33 + OH 3192/17 H	SNL 3192	5.2	300
23192 CAK/W33 + SNP 3192 x 17	SDAF 23192 KA x 17	9.3	478
23196 CA/W33	SNL 3196	5.3	326
	SDAF 23196	9.4	482
23196 CAK/W33 + OH 3196 H	SNL 3196	5.1	256
23196 CAK/W33 + OH 3196/18 H	SNL 3196	5.2	300
23196 CAK/W33 + SNP 3196 x 18	SDAF 23196 KA x 18	9.3	478
232/500 CAK/W33 + OH 32/500 H	SED 32/500	6.1	332
232/530 CAK/W33 + OH 32/530 H	SED 32/530	6.1	332
232/560 CAK/W33 + OH 32/560 H	SED 32/560	6.1	332
232/600 CAK/W33 + OH 32/600 H	SED 32/600	6.1	332
232/670 CAK/W33 + OH 32/670 H	SED 32/670	6.1	332
232/710 CAK/W33 + OH 32/710 H	SED 32/710	6.1	332

Bearing designation	Housing / Pillow block / Bearing unit	Product table No.	Page
232/750 CAK/W33 + OH 32/750 H	SED 32/750	6.1	332
23218 CC/W33	SNL 218	2.3	132
	SNL 518-615	2.3	132
	SAW 22218	8.5	438
23218 CCK/W33 + H 2318	SNL 518-615	2.1	94
23218 CCK/W33 + HA 2318	SNL 518-615	2.2	112
23218 CCK/W33 + HE 2318	SNL 518-615	2.2	112
23218 CCK/W33 + SNW 118x3.3/16	SAW 23518	8.2	424
23220 CC/W33	SNL 520-617	2.3	134
	SNL 524-620	2.3	134
	SAW 23220	8.5	438
23220 CCK/W33 + H 2320	SNL 520-617	2.1	94
23220 CCK/W33 + HA 2320	SNL 520-617	2.2	114
23220 CCK/W33 + HE 2320	SNL 520-617	2.2	114
23220 CCK/W33 + SNW 120x3.7/16	SAW 23520	8.2	424
23220-2CS	SNL 520-617	2.3	134
23222 CC/W33	SNL 522-619	2.3	134
	SAWS 23222	8.5	438
	SBDD 3222	10.3	514
	SBDD 3222	10.4	520
23222 CCK/W33 + H 2322	SNL 522-619	2.1	96
	SNL 522-619	2.2	114
	SBDD 3222	10.1	502
	SBDD 3222	10.2	508
	THDD 3222	10.5	526
23222 CCK/W33 + HE 2322	SNL 522-619	2.2	116
23222 CCK/W33 + SNW 122x3.15/16	SAWS 23522	8.2	424
23224 CC/W33	SNL 524-620	2.3	134
	SAW 23224	8.5	440
	SBDD 3224	10.3	514
	SBDD 3224	10.4	520
23224 CCK/W33 + H 2324	SNL 524-620	2.1	96
	SBDD 3224	10.2	508
	THDD 3224	10.5	526
23224 CCK/W33 + H 2334	SBDD 3224	10.1	502
23224 CCK/W33 + HA 2324	SNL 524-620	2.2	116
23224 CCK/W33 + HE 2324	SNL 524-620	2.2	116
23224 CCK/W33 + SNW 124x4.3/16	SAW 22524	8.2	424
23226 CC/W33	SNL 526	2.3	136
	SAW 23226	8.5	440
	SBDD 3226	10.3	514
	SBDD 3226	10.4	520
23226 CCK/W33 + H 2326	SNL 526	2.1	96
	SBDD 3226	10.2	508
	THDD 3226	10.5	526
23226 CCK/W33 + H 2336	SBDD 3226	10.1	502
23226 CCK/W33 + HA 2326	SNL 526	2.2	116
23226 CCK/W33 + HE 2326	SNL 526	2.2	116
23226 CCK/W33 + SNW 126x4.7/16	SAW 23526	8.2	426
23226-2CS5	SNL 526	2.3	136
23226-2CS5K + H 2326 L	SNL 526	2.1	96
23226-2CS5K + HA 2326	SNL 526	2.2	116
23226-2CS5K + HE 2326	SNL 526	2.2	116
23228 CC/W33	SNL 528	2.3	136
	SAW 23228	8.5	440
	SBDD 3228	10.3	514
	SBDD 3228	10.4	520
23228 CCK/W33 + H 2328	SNL 528	2.1	96
	SBDD 3228	10.2	508
	THDD 3228	10.5	526
23228 CCK/W33 + H 2338	SBDD 3228	10.1	502
23228 CCK/W33 + HA 2328	SNL 528	2.2	118
23228 CCK/W33 + HE 2328	SNL 528	2.2	118
23228 CCK/W33 + SNW 128x4.15/16	SAW 23528	8.2	426
23228-2CS5	SNL 528	2.3	136
23228-2CS5K + H 2328	SNL 528	2.1	96
23228-2CS5K + HA 2328	SNL 528	2.2	118
23228-2CS5K + HE 2328	SNL 528	2.2	118
23230 CC/W33	SNL 530	2.3	136
	SAW 23230	8.5	440
	SBDD 3230	10.3	514
	SBDD 3230	10.4	520

Bearing designation	Housing / Pillow block / Bearing unit	Product table No.	Page
23230 CCK/W33 + H 2330	SNL 530	2.1	96
	SBDD 3230	10.1	502
	SBDD 3230	10.2	508
23230 CCK/W33 + HA 2330	SNL 530	2.2	118
23230 CCK/W33 + HE 2330	SNL 530	2.2	118
23230 CCK/W33 + SNW 130x5.3/16	SAW 23530	8.2	426
23230-2CS5	SNL 530	2.3	136
23230-2CS5K + HA 2330	SNL 530	2.2	118
23230-2CS5K + HE 2330	SNL 530	2.2	118
23232 CC/W33	SNL 532	2.3	136
	SNL 3038	5.3	302
	SAW 23232	8.5	440
	SBDD 3232	10.3	514
	SBDD 3232	10.4	520
23232 CCK/W33 + H 2330	THDD 3230	10.5	526
23232 CCK/W33 + H 2332	SNL 532	2.1	98
	SNL 3038	5.1	222
	SBDD 3232	10.1	502
	SBDD 3232	10.2	508
	THDD 3232	10.5	526
23232 CCK/W33 + HA 2332	SNL 532	2.2	118
23232 CCK/W33 + HE 2332	SNL 532	2.2	118
23232 CCK/W33 + SNW 132x5.7/16	SAW 23532	8.2	426
23234 CC/W33	SNL 3234	5.3	302
	SAW 23234	8.5	440
	SBDD 3234	10.3	514
	SBDD 3234	10.4	520
23234 CCK/W33 + H 2334	SNL 3234	5.1	222
	SBDD 3234	10.1	504
	SBDD 3234	10.2	508
23234 CCK/W33 + H 2334/5.13/16	SNL 3234	5.2	262
23234 CCK/W33 + H 2334/5.7/8	SNL 3234	5.2	262
23234 CCK/W33 + HA 2334	SNL 3234	5.2	262
23234 CCK/W33 + HE 2334	SNL 3234	5.2	264
23234 CCK/W33 + SNW 134x5.15/16	SAW 23534	8.2	426
23236 CC/W33	SNL 3236	5.3	304
	SAW 23236	8.5	440
	SBDD 3236	10.3	516
	SBDD 3236	10.4	522
23236 CCK/W33 + H 2336	SNL 3236	5.1	224
	SBDD 3236	10.1	504
	SBDD 3236	10.2	510
	THDD 3236	10.5	526
23236 CCK/W33 + HA 2336	SNL 3236	5.2	266
23236 CCK/W33 + HE 2336	SNL 3236	5.2	266
23236 CCK/W33 + SNW 136x6.7/16	SAW 23536	8.2	428
23238 CC/W33	SNL 3238	5.3	304
	SAW 23238	8.5	442
	SBDD 3238	10.3	516
	SBDD 3238	10.4	522
23238 CCK/W33 + H 2338	SNL 3238	5.1	226
	SBDD 3238	10.1	504
	SBDD 3238	10.2	510
23238 CCK/W33 + H 2338/6.13/16	SNL 3238	5.2	268
23238 CCK/W33 + H 2338/6.7/8	SNL 3238	5.2	270
23238 CCK/W33 + H 2338/7	SNL 3238	5.2	272
23238 CCK/W33 + HA 2338	SNL 3238	5.2	270
23238 CCK/W33 + HE 2338	SNL 3238	5.2	268
23238 CCK/W33 + SNW 138x6.15/16	SAW 23538	8.2	428
23240 CC/W33	SNL 3240	5.3	306
	SAW 23240	8.5	442
	SBDD 3240	10.3	516
	SBDD 3240	10.4	522
23240 CCK/W33 + H 2340	SNL 3240	5.1	228
	SBDD 3240	10.1	504
	SBDD 3240	10.2	510
	THDD 3240	10.5	528
23240 CCK/W33 + H 2340/7.1/4	SNL 3240	5.2	276
23240 CCK/W33 + H 2340/7.1/8	SNL 3240	5.2	274
23240 CCK/W33 + HA 2340	SNL 3240	5.2	274
23240 CCK/W33 + HE 2340	SNL 3240	5.2	272
23240 CCK/W33 + SNW 140x7.3/16	SAW 23540	8.2	428
23240-2CS5	SNL 3240	5.3	306

Bearing designation	Housing / Pillow block / Bearing unit	Product table No.	Page
23244 CC/W33	SNL 3244	5.3	308
	SAW 23244	8.5	442
	SBDD 3244	10.3	516
	SBDD 3244	10.4	522
23244 CCK/W33 + H 2344/7.15/16	SNL 3244	5.2	278
23244 CCK/W33 + OH 2344 H	SNL 3244	5.1	230
	SBDD 3244	10.1	504
	THDD 3244	10.5	528
23244 CCK/W33 + OH 2344 HB	SBDD 3244	10.2	510
23244 CCK/W33 + SNW 144x7.15/16	SAW 23544	8.2	428
23248 CAC/W33	SDAF 23248	9.4	480
23248 CACK/W33 + SNP 148 x 815/16	SDAF 23248 KA x 815/16	9.3	476
23248 CC/W33	SNL 3248	5.3	310
	SBDD 3248	10.3	516
	SBDD 3248	10.4	522
23248 CCK/W33 + H 2348/8.15/16	SNL 3248	5.2	280
23248 CCK/W33 + OH 2348 H	SNL 3248	5.1	232
	SBDD 3248	10.1	504
	THDD 3248	10.5	528
23248 CCK/W33 + OH 2348 HB	SBDD 3248	10.2	510
23252 CAC/W33	SDAF 23252	9.4	480
23252 CACK/W33 + SNP 152 x 97/16	SDAF 23252 KA x 97/16	9.3	476
23252 CC/W33	SNL 3252	5.3	310
	SBDD 3252	10.3	516
	SBDD 3252	10.4	522
23252 CCK/W33 + H 2352/9.1/2	SNL 3252	5.2	282
23252 CCK/W33 + OH 2352 H	SNL 3252	5.1	234
	SBDD 3252	10.1	504
	THDD 3252	10.5	528
23252 CCK/W33 + OH 2352 HB	SBDD 3252	10.2	510
23252 CCK/W33 + OH 2352/9.7/16 H	SNL 3252	5.2	280
23256 CAC/W33	SDAF 23256	9.4	480
23256 CACK/W33 + SNP 3256 x 107/16	SDAF 23256 KA x 107/16	9.3	476
23256 CC/W33	SNL 3256	5.3	312
	SBDD 3256	10.3	516
	SBDD 3256	10.4	522
23256 CCK/W33 + H 2356/10.1/2	SNL 3256	5.2	284
23256 CCK/W33 + H 2356/10.7/16	SNL 3256	5.2	284
23256 CCK/W33 + OH 2356 H	SNL 3256	5.1	236
	SBDD 3256	10.1	506
	THDD 3256	10.5	528
23256 CCK/W33 + OH 2356 HB	SBDD 3256	10.2	510
23260 CAC/W33	SDAF 23260	9.4	480
23260 CACK/W33 + SNP 3260 x 1015/16	SDAF 23260 KA x 1015/16	9.3	476
23260 CC/W33	SNL 3260	5.3	312
	SBDD 3260	10.3	518
	SBDD 3260	10.4	524
23260 CCK/W33 + OH 2360 HB	SBDD 3260	10.2	512
23260 CCK/W33 + OH 3260 H	SNL 3260	5.1	238
	SBDD 3260	10.1	506
	THDD 3260	10.5	528
23260 CCK/W33 + OH 3260/10.15/16 H	SNL 3260	5.2	286
23260 CCK/W33 + OH 3260/11 H	SNL 3260	5.2	286
23264 CAC/W33	SDAF 23264	9.4	480
23264 CACK/W33 + SNP 3264 x 1115/16	SDAF 23264 KA x 1115/16	9.3	476
23264 CC/W33	SNL 3264	5.3	314
	SBDD 3264	10.3	518
	SBDD 3264	10.4	524
23264 CCK/W33 + H 3264/11.15/16	SNL 3264	5.2	288
23264 CCK/W33 + H 3264/12	SNL 3264	5.2	288
23264 CCK/W33 + OH 2364 HB	SBDD 3264	10.2	512
23264 CCK/W33 + OH 3264 H	SNL 3264	5.1	240
	SBDD 3264	10.1	506
	THDD 3264	10.5	528
23268 CA/W33	SNL 3268	5.3	314
	SDAF 23268	9.4	480
	SBDD 3268	10.3	518
	SBDD 3268	10.4	524
23268 CAK/W33 + OH 3268 H	SNL 3268	5.1	242
	SBDD 3268	10.1	506
	THDD 3268	10.5	528
23268 CAK/W33 + OH 3268 HB	SBDD 3268	10.2	512
23268 CAK/W33 + OH 3268/12.1/2 H	SNL 3268	5.2	290

Bearing designation	Housing / Pillow block / Bearing unit	Product table No.	Page
23268 CAK/W33 + OH 3268/12.7/16 H	SNL 3268	5.2	290
23268 CAK/W33 + SNP 3268 x 127/16	SDAF 23268 KA x 127/16	9.3	476
23272 CA/W33	SNL 3272	5.3	316
	SDAF 23272	9.4	480
	SBDD 3272	10.3	518
	SBDD 3272	10.4	524
23272 CAK/W33 + H 3272/13.1/2	SNL 3272	5.2	294
23272 CAK/W33 + H 3272/13.7/16	SNL 3272	5.2	292
23272 CAK/W33 + OH 3272 H	SNL 3272	5.1	244
	SBDD 3272	10.1	506
	THDD 3272	10.5	528
23272 CAK/W33 + OH 3272 HB	SBDD 3272	10.2	512
23272 CAK/W33 + SNP 3272 x 137/16	SDAF 23272 KA x 137/16	9.3	476
23276 CA/W33	SNL 3276	5.3	318
	SDAF 23276	9.4	480
	SBDD 3276	10.3	518
	SBDD 3276	10.4	524
23276 CAK/W33 + OH 3276 H	SNL 3276	5.1	246
	SBDD 3276	10.1	506
	THDD 3276	10.5	528
23276 CAK/W33 + OH 3276 HB	SBDD 3276	10.2	512
23276 CAK/W33 + OH 3276/13.15/16 H	SNL 3276	5.2	294
23276 CAK/W33 + OH 3276/14 H	SNL 3276	5.2	296
23276 CAK/W33 + SNP 3276 x 1315/16	SDAF 23276 KA x 1315/16	9.3	476
23280 CA/W33	SNL 3280	5.3	320
	SDAF 23280	9.4	480
	SBDD 3280	10.3	518
	SBDD 3280	10.4	524
23280 CAK/W33 + H 3280/15	SNL 3280	5.2	296
23280 CAK/W33 + OH 3280 H	SNL 3280	5.1	248
	SBDD 3280	10.1	506
	THDD 3280	10.5	528
23280 CAK/W33 + OH 3280 HB	SBDD 3280	10.2	512
23280 CAK/W33 + SNP 3280 x 15	SDAF 23280 KA x 15	9.3	476
23284 CA/W33	SNL 3284	5.3	322
	SDAF 23284	9.4	480
	SBDD 3284	10.3	518
	SBDD 3284	10.4	524
23284 CAK/W33 + H 3284/15.3/4	SNL 3284	5.2	298
23284 CAK/W33 + OH 3284 H	SNL 3284	5.1	250
	SBDD 3284	10.1	506
	THDD 3284	10.5	528
23284 CAK/W33 + OH 3284 HB	SBDD 3284	10.2	512
23284 CAK/W33 + SNP 3284 x 153/4	SDAF 23284 KA x 153/4	9.3	478
23288 CA/W33	SNL 3288	5.3	324
	SDAF 23288	9.4	482
23288 CAK/W33 + OH 3288 H	SNL 3288	5.1	252
23288 CAK/W33 + OH 3288/16.1/2 H	SNL 3288	5.2	298
23288 CAK/W33 + SNP 3288 x 161/2	SDAF 23288 KA x 161/2	9.3	478
23292 CAK/W33 + OH 3292 H	SED 3292	6.1	332
23296 CAK/W33 + OH 3296 H	SED 3296	6.1	332
239/1060 CAKF/W33 + KOH 39/1060	FSDR 39/1060 K	15.1	656
239/1180 CAKF/W33 + KOH 39/1180	FSDR 39/1180 K	15.1	656
239/600 CAK/W33 + OH 39/600 H	SED 39/600	6.1	332
239/630 CAK/W33 + OH 39/630 H	SED 39/630	6.1	332
239/670 CAK/W33 + OH 39/670 H	SED 39/670	6.1	332
239/710 CAK/W33 + OH 39/710 H	SED 39/710	6.1	332
239/750 CAK/W33 + OH 39/750 H	SED 39/750	6.1	332
239/800 CAK/W33 + OH 39/800 H	SED 39/800	6.1	332
239/850 CAK/W33 + KOH 39/850	FSDR 39/850 K	15.1	656
239/850 CAK/W33 + OH 39/850 H	SED 39/850	6.1	334
239/900 CAK/W33 + OH 39/900 H	SED 39/900	6.1	334
239/950 CAK/W33 + OH 39/950 H	SED 39/950	6.1	334
240/500 ECA/W33	SNL 40/500	5.3	328
240/530 ECA/W33	SNL 40/530	5.3	328
24024 CC/W33	SNLN 3024	4.2	180
24024-2CS5	SNLN 3024	4.2	180
24026 CC/W33	SNLN 3026	4.2	180
24026-2CS5	SNLN 3026	4.2	180
24028 CC/W33	SNLN 3028	4.2	180
24028-2CS5	SNLN 3028	4.2	180
24030 CC/W33	SNLN 3030	4.2	180
24030-2CS5	SNLN 3030	4.2	180

18.3 Bearing index

Bearing designation	Housing / Pillow block / Bearing unit	Product table No.	Page
24032 CC/W33	SNLN 3032	4.2	182
24032-2CS5	SNLN 3032	4.2	182
24036 CC/W33	SNL 3036	5.3	304
24036-2CS5	SNL 3036	5.3	304
24038 CC/W33	SNL 3038	5.3	304
24040 CC/W33	SNL 3040	5.3	306
24044 CC/W33	SNL 3044	5.3	308
24048 CC/W33	SNL 3048	5.3	310
24052 CC/W33	SNL 3052	5.3	310
24056 CC/W33	SNL 3056	5.3	312
24060 CC/W33	SNL 3060	5.3	312
24064 CC/W33	SNL 3064	5.3	314
24068 CC/W33	SNL 3068	5.3	314
24072 CC/W33	SNL 3072	5.3	316
24076 CC/W33	SNL 4076	5.3	318
24080 ECCJ/W33	SNL 4080	5.3	320
24084 ECA/W33	SNL 4084	5.3	322
24088 ECA/W33	SNL 4088	5.3	324
24092 ECA/W33	SNL 4092	5.3	326
24096 ECA/W33	SNL 4096	5.3	326
248/1500 CAK30FA/W20 + 236558	FSDR 48/1500 K	15.1	656
249/1000 CAF/W33	SKND 49/1000	14.1	634
249/1060 CAF/W33	SKND 49/1060	14.1	636
249/1120 CAF/W33	SKND 49/1120	14.1	636
249/1180 CAF/W33	SKND 49/1180	14.1	636
249/1320 CAK30F/W33 + 236696-1	FSDR 49/1320 K	15.1	656
249/710 CA/W33	SKND 49/710	14.1	634
249/750 CA/W33	SKND 49/750	14.1	634
249/800 CA/W33	SKND 49/800	14.1	634
249/850 CA/W33	SKND 49/850	14.1	634
249/900 CA/W33	SKND 49/900	14.1	634
249/950 CA/W33	SKND 49/950	14.1	634
BS2-2205-2CS	SNL 205	2.3	120
	SNL 505	2.3	120
BS2-2206-2CS	SNL 206-305	2.3	120
	SNL 506-605	2.3	120
BS2-2207-2CS	SE 207	2.3	122
	SE 507-606	2.3	122
BS2-2208-2CS	SE 208-307	2.3	122
	SE 508-607	2.3	122
BS2-2208-2CSK + H 2308 E	SE 508-607	2.1	88
BS2-2209-2CS	SE 209	2.3	124
	SE 509	2.3	124
BS2-2209-2CSK + H 309 E	SE 509	2.1	88
BS2-2209-2CSK + HA 309 E	SE 509	2.2	102
BS2-2209-2CSK + HE 309 E	SE 509	2.2	104
BS2-2210-2CS	SE 210	2.3	124
	SE 510-608	2.3	124
BS2-2210-2CSK + H 310 E	SE 510-608	2.1	88
BS2-2210-2CSK + HA 310 E	SE 510-608	2.2	104
BS2-2210-2CSK + HE 310 E	SE 510-608	2.2	104
BS2-2211-2CS	SE 211	2.3	126
	SE 511-609	2.3	126
BS2-2211-2CSK + H 311 E	SE 511-609	2.1	90
BS2-2211-2CSK + HA 311 E	SE 511-609	2.2	106
BS2-2211-2CSK + HE 311 BE	SE 511-609	2.2	106
BS2-2212-2CS	SE 212	2.3	126
	SE 512-610	2.3	126
BS2-2212-2CSK + H 312 E	SE 512-610	2.1	90
BS2-2213-2CS	SE 213	2.3	128
	SE 513-611	2.3	128
BS2-2213-2CSK + H 2313 E	SE 513-611	2.1	90
BS2-2213-2CSK + HA 2313 E	SE 513-611	2.2	106
BS2-2213-2CSK + HE 2313 E	SE 513-611	2.2	108
BS2-2215-2CS	SE 215	2.3	130
	SE 515-612	2.3	130
BS2-2215-2CSK + H 315 E	SE 515-612	2.1	92
BS2-2215-2CSK + HA 315 E	SE 515-612	2.2	108
BS2-2215-2CSK + HE 315 E	SE 515-612	2.2	108
BS2-2216-2CS	SNL 216	2.3	130
	SNL 516-613	2.3	130
BS2-2216-2CSK + H 316 E	SNL 516-613	2.1	92
BS2-2216-2CSK + HA 316 E	SNL 516-613	2.2	110

Bearing designation	Housing / Pillow block / Bearing unit	Product table No.	Page
BS2-2216-2CSK + HE 316 E	SNL 516-613	2.2	110
BS2-2217-2CS	SNL 217	2.3	132
	SNL 517	2.3	132
BS2-2217-2CSK + H 317 E	SNL 517	2.1	92
BS2-2217-2CSK + HA 317 E	SNL 517	2.2	110
BS2-2217-2CSK + HE 317 E	SNL 517	2.2	112
BS2-2218-2CS	SNL 218	2.3	132
	SNL 518-615	2.3	132
BS2-2218-2CSK + H 2318 E/L73	SNL 518-615	2.1	94
BS2-2218-2CSK + HA 2318 E/L73	SNL 518-615	2.2	112
BS2-2218-2CSK + HE 2318 E/L73	SNL 518-615	2.2	112
BS2-2220-2CS5	SNL 520-617	2.3	134
BS2-2220-2CS5K + H 2320 E	SNL 520-617	2.1	94
BS2-2220-2CS5K + HA 2320 E	SNL 520-617	2.2	114
BS2-2220-2CS5K + HE 2320 E	SNL 520-617	2.2	114
BS2-2222-2CS5	SNL 522-619	2.3	134
BS2-2222-2CS5K + H 2322 E	SNL 522-619	2.1	96
	SNL 522-619	2.2	114
BS2-2222-2CS5K + HE 2322 E	SNL 522-619	2.2	116
BS2-2224-2CS5	SNL 524-620	2.3	134
BS2-2224-2CS5K + H 2324 EH	SNL 524-620	2.1	96
BS2-2224-2CS5K + HA 2324 EH	SNL 524-620	2.2	116
BS2-2224-2CS5K + HE 2324 EH	SNL 524-620	2.2	116
BS2-2226-2CS5	SNL 526	2.3	136
BS2-2226-2CS5K + H 2326 L	SNL 526	2.1	96
BS2-2226-2CS5K + HA 2326 L	SNL 526	2.2	116
BS2-2226-2CS5K + HE 2326 L	SNL 526	2.2	116
BS2-2308-2CS	SE 510-608	2.3	122
BS2-2311-2CS	SE 513-611	2.3	126

Bearing designation	Housing / Pillow block / Bearing unit	Product table No.	Page
CARB toroidal roller bearings			
C 2205 TN9	SNL 205	2.3	120
	SNL 505	2.3	120
C 2205 KTN9 + H 305 E	SNL 505	2.1	86
	FNL 505	11.1	546
C 2205 KTN9 + HE 305 E	SNL 505	2.2	100
C 2206 TN9	SNL 206-305	2.3	120
	SNL 506-605	2.3	120
C 2206 KTN9 + H 306 E	SNL 506-605	2.1	86
	FNL 506	11.1	546
C 2206 KTN9 + HA 306 E	SNL 506-605	2.2	100
C 2206 KTN9 + HE 306 E	SNL 506-605	2.2	100
C 2207 TN9	SE 207	2.3	122
	SE 507-606	2.3	122
C 2207 KTN9 + H 307 E	SE 507-606	2.1	86
	FNL 507	11.1	546
C 2207 KTN9 + HA 307 E	SE 507-606	2.2	102
	SAF C2507	8.3	430
C 2208 TN9	SE 208-307	2.3	122
	SE 508-607	2.3	122
C 2208 KTN9 + H 308 E	SE 508-607	2.1	88
	FNL 508	11.1	546
C 2208 KTN9 + HE 308 E	SE 508-607	2.2	102
C 2209 TN9	SE 209	2.3	124
	SE 509	2.3	124
C 2209 KTN9 + H 309 E	SE 509	2.1	88
	FNL 509	11.1	546
C 2209 KTN9 + HA 309 E	SE 509	2.2	102
	SAF C2509	8.3	430
C 2209 KTN9 + HE 309 E	SE 509	2.2	104
C 2210 TN9	SE 210	2.3	124
	SE 510-608	2.3	124
C 2210 KTN9 + H 310 E	SE 510-608	2.1	88
	FNL 510	11.1	548
C 2210 KTN9 + HA 310 E	SE 510-608	2.2	104
	SAF C2510	8.3	430
C 2210 KTN9 + HE 310 E	SE 510-608	2.2	104
C 2211 TN9	SE 211	2.3	126
	SE 511-609	2.3	126
C 2211 KTN9 + H 311 E	SE 511-609	2.1	90
	FNL 511	11.1	548
C 2211 KTN9 + HA 311 E	SE 511-609	2.2	106
	SAF C2511	8.3	430
C 2211 KTN9 + HE 311 BE	SE 511-609	2.2	106
C 2212 TN9	SE 212	2.3	126
	SE 512-610	2.3	126
C 2212 KTN9 + H 312 E	SE 512-610	2.1	90
	FNL 512	11.1	548
C 2213 TN9	SE 213	2.3	128
	SE 513-611	2.3	128
	SAF C2213	8.6	444
C 2213 KTN9 + H 313 E	SE 513-611	2.1	90
	FNL 513	11.1	548
C 2213 KTN9 + HA 313 E	SE 513-611	2.2	106
	SAF C2513	8.3	430
C 2213 KTN9 + HE 313 E	SE 513-611	2.2	108
C 2215	SE 215	2.3	130
	SE 515-612	2.3	130
	SAF C2215	8.6	444
C 2215 K + H 315 E	SE 515-612	2.1	92
	FNL 515	11.1	550
C 2215 K + HA 315 E	SE 515-612	2.2	108
	SAF C2515	8.3	430
C 2215 K + HE 315 E	SE 515-612	2.2	108
C 2216	SNL 216	2.3	130
	SNL 516-613	2.3	130
	SAF C2216	8.6	444
C 2216 K + H 316 E	SNL 516-613	2.1	92
	FNL 516	11.1	550
C 2216 K + HA 316 E	SNL 516-613	2.2	110
	SAF C2516	8.3	430
C 2216 K + HE 316 E	SNL 516-613	2.2	110

Bearing designation	Housing / Pillow block / Bearing unit	Product table No.	Page
C 2217	SNL 217	2.3	132
	SNL 517	2.3	132
	SONL 217-517	7.3	378
	SAF C2217	8.6	444
C 2217 K + H 317 E	SNL 517	2.1	92
	SONL 217-517	7.1	370
	FNL 517	11.1	550
C 2217 K + HA 317 E	SNL 517	2.2	110
	SONL 217-517	7.2	374
	SAF C2517	8.3	430
C 2217 K + HE 317 E	SNL 517	2.2	112
C 2218	SNL 218	2.3	132
	SNL 518-615	2.3	132
	SONL 218-518	7.3	378
	SAF C2218	8.6	444
C 2218 K + H 318 E	SNL 518-615	2.1	94
	SONL 218-518	7.1	370
	FNL 518	11.1	550
C 2218 K + HA 318 E	SNL 518-615	2.2	112
	SONL 218-518	7.2	374
	SAF C2518	8.3	430
C 2218 K + HE 318 E	SNL 518-615	2.2	112
C 2219 K + H 319 E	SNL 519-616	2.1	94
C 2220	SNL 520-617	2.3	134
	SONL 220-520	7.3	378
	SAF C2220	8.6	446
C 2220 K + H 320 E	SNL 520-617	2.1	94
	SONL 220-520	7.1	370
	FNL 520	11.1	550
C 2220 K + HA 320 E	SNL 520-617	2.2	114
	SONL 220-520	7.2	374
	SAF C2520	8.3	432
C 2220 K + HE 320 E	SNL 520-617	2.2	114
C 2222	SNL 522-619	2.3	134
	SONL 222-522	7.3	378
	SAF C2222	8.6	446
C 2222 K + H 322 E	SNL 522-619	2.1	96
	SNL 522-619	2.2	114
	SONL 222-522	7.1	370
	SONL 222-522	7.2	374
	SAF C2522	8.3	432
	FNL 522	11.1	550
C 2222 K + HE 322 E	SNL 522-619	2.2	116
C 2224	SONL 224-524	7.3	378
C 2224 K + H 3124 L	SNL 524-620	2.1	96
	SONL 224-524	7.1	370
C 2224 K + HA 3124 L	SONL 224-524	7.2	374
C 2224 K + HE 3124 L	SNL 524-620	2.2	116
C 2226	SNL 526	2.3	136
	SONL 226-526	7.3	378
	SAF C2226	8.6	446
C 2226 K + H 3126 L	SNL 526	2.1	96
	SONL 226-526	7.1	370
C 2226 K + HA 3126 E	SAF C2526	8.3	432
C 2226 K + HA 3126 L	SNL 526	2.2	116
	SONL 226-526	7.2	374
C 2226 K + HE 3126 L	SNL 526	2.2	116
C 2228	SNL 528	2.3	136
	SONL 228-528	7.3	378
	SAF C2228	8.6	446
C 2228 K + H 3128 L	SNL 528	2.1	96
	SONL 228-528	7.1	370
C 2228 K + HA 3128 E	SAF C2528	8.3	432
C 2228 K + HA 3128 L	SNL 528	2.2	118
	SONL 228-528	7.2	374
C 2228 K + HE 3128 L	SNL 528	2.2	118
C 2230	SNL 530	2.3	136
	SONL 230-530	7.3	378
	SAF C2230	8.6	446
C 2230 K + H 3130 L	SNL 530	2.1	96
	SONL 230-530	7.1	370

Bearing designation	Housing / Pillow block / Bearing unit	Product table No.	Page
C 2230 K + HA 3130 L	SNL 530	2.2	118
	SONL 230-530	7.2	374
	SAF C2530	8.3	432
C 2230 K + HE 3130 L	SNL 530	2.2	118
C 2234	SNL 3040	5.3	302
	SONL 234-534	7.3	380
	SAF C2234	8.6	446
C 2234 K + H 3134 L	SNL 3040	5.1	222
	SONL 234-534	7.1	370
C 2234 K + H 3134/5.13/16 L	SNL 3040	5.2	262
C 2234 K + H 3134/5.7/8 L	SNL 3040	5.2	262
C 2234 K + HA 3134 L	SONL 234-534	7.2	376
	SAF C2534	8.3	432
C 2238	SNL 3140	5.3	304
	SONL 238-538	7.3	380
	SAF C2238	8.6	446
C 2238 K + H 3138	SNL 3140	5.1	226
	SONL 238-538	7.1	372
C 2238 K + H 3138/6.13/16	SNL 3140	5.2	268
C 2238 K + H 3138/6.7/8	SNL 3140	5.2	270
C 2238 K + H 3138/7	SNL 3140	5.2	272
C 2238 K + HA 3138	SNL 3140	5.2	270
	SONL 238-538	7.2	376
	SAF C2538	8.3	432
C 2238 K + HE 3138	SNL 3140	5.2	268
C 2244	SNL 3148	5.3	308
	SONL 244-544	7.3	380
	SAF C2244	8.6	446
C 2244 K + H 3044/7.15/16	SONL 244-544	7.2	376
C 2244 K + H 3144/201.612	SAF C2544	8.3	432
C 2244 K + H 3144/7.15/16	SNL 3148	5.2	278
C 2244 K + H 3144/8	SNL 3148	5.2	278
C 2244 K + OH 3144 H	SNL 3148	5.1	230
	SONL 244-544	7.1	372
C 2314	SAF C2314	8.6	444
C 2315	SNL 518-615	2.3	130
	SAF C2315	8.6	444
C 2315 K + H 2315	SNL 518-615	2.1	92
C 2315 K + HA 2315	SNL 518-615	2.2	108
	SAF C2615	8.3	430
C 2315 K + HE 2315	SNL 518-615	2.2	108
C 2316	SNL 519-616	2.3	130
	SAF C2316	8.6	444
C 2316 K + H 2316	SNL 519-616	2.1	92
C 2316 K + HA 2316	SNL 519-616	2.2	110
	SAF C2616	8.3	430
C 2316 K + HE 2316	SNL 519-616	2.2	110
C 2317	SNL 520-617	2.3	132
	SAF C2317	8.6	444
C 2317 K + H 2317	SNL 520-617	2.1	92
C 2317 K + HA 2317	SNL 520-617	2.2	110
	SAF C2617	8.3	430
C 2317 K + HE 2317	SNL 520-617	2.2	112
C 2318	SAF C2318	8.6	444
C 2318 K + HA 2318	SAF C2618	8.3	430
C 2319	SNL 522-619	2.3	134
C 2319 K + H 2319	SNL 522-619	2.1	94
C 2319 K + HE 2319	SNL 522-619	2.2	112
C 2320	SNL 524-620	2.3	134
	SAF C2320	8.6	446
C 2320 K + H 2320	SNL 524-620	2.1	94
C 2320 K + HA 2320	SNL 524-620	2.2	114
	SAF C2620	8.3	432
C 2320 K + HE 2320	SNL 524-620	2.2	114
C 30/500 M	SNL 30/500	5.3	328
C 30/500 KM + OH 30/500 H	SNL 30/500	5.1	258
C 30/500 KM + OH 30/500/18.1/2 H	SNL 30/500	5.2	300
C 30/530 M	SNL 30/530	5.3	328
C 30/530 KM	SDM 30/530	13.5	614
	SDM 30/530	13.6	618
C 30/530 KM + OH 30/530 H	SNL 30/530	5.1	258
C 30/530 KM + OH 30/530/19.1/2 H	SNL 30/530	5.2	300
C 30/530 M/VB569	SKND 30/530	14.1	634

Bearing designation	Housing / Pillow block / Bearing unit	Product table No.	Page
C 30/600 M/VB569	SKND 30/600	14.1	634
C 30/600 KM	SDM 30/600	13.5	614
	SDM 30/600	13.6	618
C 30/670 M/VB569	SKND 30/670	14.1	634
C 30/670 KM/HA3C4	SDM 30/670	13.5	616
	SDM 30/670	13.6	620
C 3024	SNLN 3024	4.2	180
C 3024 K + H 3024 E	SNLN 3024	4.1	176
C 3026	SNLN 3026	4.2	180
C 3026 K + H 3026	SNLN 3026	4.1	176
C 3028	SNLN 3028	4.2	180
C 3028 K + H 3028 E	SNLN 3028	4.1	176
C 3030 V	SNLN 3030	4.2	180
C 3030 KV + H 3030	SNLN 3030	4.1	176
C 3032	SNLN 3032	4.2	182
C 3032 K + H 3032 E	SNLN 3032	4.1	176
C 3034	SNLN 3034	4.2	182
C 3034 K + H 3034 E	SNLN 3034	4.1	178
C 3036	SNLN 3036	4.2	182
	SNL 3036	5.3	304
C 3036 K + H 3036	SNLN 3036	4.1	178
	SNL 3036	5.1	224
C 3036 K + H 3036/6.3/8	SNL 3036	5.2	264
C 3036 K + H 3036/6.5/16	SNL 3036	5.2	264
C 3036 K + HA 3036	SNL 3036	5.2	266
	SAF C3036 KA x 6.7/16	8.3	432
C 3036 K + HE 3036	SNL 3036	5.2	266
C 3038	SNLN 3038	4.2	182
	SNL 3038	5.3	304
C 3038 K + H 3038	SNLN 3038	4.1	178
	SNL 3038	5.1	226
C 3038 K + H 3038/6.13/16	SNL 3038	5.2	268
C 3038 K + H 3038/6.7/8	SNL 3038	5.2	270
C 3038 K + H 3038/7	SNL 3038	5.2	272
C 3038 K + HA 3038	SNL 3038	5.2	270
	SAF C3038 KA x 6.15/16	8.3	432
C 3038 K + HE 3038	SNL 3038	5.2	268
C 3040	SNLN 3040	4.2	182
	SNL 3040	5.3	306
C 3040 K + H 3040	SNLN 3040	4.1	178
	SNL 3040	5.1	228
C 3040 K + H 3040/7.1/4	SNL 3040	5.2	276
C 3040 K + H 3040/7.1/8	SNL 3040	5.2	274
C 3040 K + HA 3040	SNL 3040	5.2	274
	SAF C3040 KA x 7.3/16	8.3	432
C 3040 K + HE 3040	SNL 3040	5.2	272
C 3044	SNLN 3044	4.2	182
	SNL 3044	5.3	308
C 3044 K + H 3044/201.6	SAF C3044 KA x 7.15/16	8.3	432
C 3044 K + H 3044/7.15/16	SNL 3044	5.2	278
C 3044 K + H 3044/8	SNL 3044	5.2	278
C 3044 K + OH 3044 H	SNLN 3044	4.1	178
	SNL 3044	5.1	230
C 3044 K + OH 3044/7.13/16 H	SNL 3044	5.2	276
C 3044 K + OH 3044/7.7/8 H	SNL 3044	5.2	276
C 3048	SNLN 3048	4.2	182
	SNL 3048	5.3	310
C 3048 K + H 3048/227	SAF C3048 KA x 8.15/16	8.3	432
C 3048 K + H 3048/8.15/16	SNL 3048	5.2	280
C 3048 K + OH 3048 H	SNLN 3048	4.1	178
	SNL 3048	5.1	232
C 3048 K + OH 3048/8.1/2 H	SNL 3048	5.2	280
C 3048 K + OH 3048/8.7/16 H	SNL 3048	5.2	278
C 3052	SNLN 3052	4.2	182
	SNL 3052	5.3	310
C 3052 K + H 3052/239.7	SAF C3052 KA x 9.7/16	8.3	432
C 3052 K + H 3052/9.1/2	SNL 3052	5.2	282
C 3052 K + OH 3052 H	SNLN 3052	4.1	178
	SNL 3052	5.1	234
C 3052 K + OH 3052/9.7/16 H	SNL 3052	5.2	280
C 3056	SNLN 3056	4.2	182
	SNL 3056	5.3	312
C 3056 K + H 3056/10.1/2	SNL 3056	5.2	284

Bearing designation	Housing / Pillow block / Bearing unit	Product table No.	Page
C 3056 K + H 3056/10.7/16	SNL 3056	5.2	284
C 3056 K + H 3056/252.4	SAF C3056 KA x 10.7/16	8.3	432
C 3056 K + H 3056/265.1	SAF C3056 KA x 9.15/16	8.3	432
C 3056 K + OH 3056 H	SNLN 3056	4.1	178
	SNL 3056	5.1	236
C 3056 K + OH 3056/10 H	SNL 3056	5.2	282
C 3056 K + OH 3056/9.15/16 H	SNL 3056	5.2	282
C 3060 M	SNL 3060	5.3	312
C 3060 KM + OH 3060 H	SNL 3060	5.1	238
C 3060 KM + OH 3060/10.15/16 H	SNL 3060	5.2	286
C 3060 KM + OH 3060/11 H	SNL 3060	5.2	286
C 3064 M	SNL 3064	5.3	314
C 3064 KM + H 3064/11.15/16	SNL 3064	5.2	288
C 3064 KM + H 3064/12	SNL 3064	5.2	288
C 3064 KM + OH 3064 H	SNL 3064	5.1	240
C 3064 KM + OH 3064/11.1/2 H	SNL 3064	5.2	286
C 3064 KM + OH 3064/11.7/16 H	SNL 3064	5.2	286
C 3068 M	SNL 3068	5.3	314
C 3068 K	SDM 3068	13.5	614
	SDM 3068	13.6	618
C 3068 KM + OH 3068 H	SNL 3068	5.1	242
C 3068 KM + OH 3068/12.1/2 H	SNL 3068	5.2	290
C 3068 KM + OH 3068/12.7/16 H	SNL 3068	5.2	290
C 3072 M	SNL 3072	5.3	316
C 3072 KM + H 3072/13.1/2	SNL 3072	5.2	294
C 3072 KM + H 3072/13.7/16	SNL 3072	5.2	292
C 3072 KM + OH 3072 H	SNL 3072	5.1	244
C 3072 KM + OH 3072/12.15/16 H	SNL 3072	5.2	292
C 3072 KM + OH 3072/13 H	SNL 3072	5.2	292
C 3076 M	SNL 3076	5.3	318
C 3076 K	SDM 3076	13.5	614
	SDM 3076	13.6	618
C 3076 KM + OH 3076 H	SNL 3076	5.1	246
C 3076 KM + OH 3076/13.15/16 H	SNL 3076	5.2	294
C 3076 KM + OH 3076/14 H	SNL 3076	5.2	296
C 3080 M	SNL 3080	5.3	320
C 3080 KM + H 3080/15	SNL 3080	5.2	296
C 3080 KM + OH 3080 H	SNL 3080	5.1	248
C 3084 M	SNL 3084	5.3	322
C 3084 KM	SDM 3084	13.5	614
	SDM 3084	13.6	618
C 3084 KM + H 3084/15.3/4	SNL 3084	5.2	298
C 3084 KM + OH 3084 H	SNL 3084	5.1	250
C 3088 MB	SNL 3088	5.3	324
C 3088 KMB + OH 3088 HE	SNL 3088	5.1	252
C 3088 KMB + OH 3088/16.1/2 HE	SNL 3088	5.2	298
C 3092 M	SNL 3092	5.3	326
C 3092 KM	SDM 3092	13.5	614
	SDM 3092	13.6	618
C 3092 KM + OH 3092 H	SNL 3092	5.1	254
C 3092 KM + OH 3092/17 H	SNL 3092	5.2	300
C 3096 M	SNL 3096	5.3	326
C 3096 KM + OH 3096 H	SNL 3096	5.1	256
C 3096 KM + OH 3096/18 H	SNL 3096	5.2	300
C 31/530 KM	SDM 31/530	13.5	614
	SDM 31/530	13.6	618
C 31/630 KMB/HA3C4	SDM 31/630	13.5	616
	SDM 31/630	13.6	620
C 3134 K + H 3134 E	SNL 3134	5.1	222
C 3134 K + HA 3134 L	SNL 3134	5.2	262
C 3136	SNL 3136	5.3	304
C 3136 K	SBPN 3136	13.1	606
	ASBPN 3136	13.2	608
	SBPN 3136	13.3	610
	ASBPN 3136	13.4	612
C 3136 K + H 3136 L	SNL 3136	5.1	224
C 3136 K + HA 3136 L	SNL 3136	5.2	266
C 3136 K + HE 3136 L	SNL 3136	5.2	266
C 3138	SNL 3138	5.3	304
C 3138 KV + H 3138	SNL 3138	5.1	226
C 3138 KV + HA 3138	SNL 3138	5.2	270
C 3138 KV + HE 3138	SNL 3138	5.2	268
C 3140	SNL 3140	5.3	306

Bearing designation	Housing / Pillow block / Bearing unit	Product table No.	Page
C 3140 K	SBPN 3140	13.1	606
	SBPN 3140	13.3	610
C 3140 K + H 3140	SNL 3140	5.1	228
C 3140 K + HA 3140	SNL 3140	5.2	274
C 3140 K + HE 3140	SNL 3140	5.2	272
C 3144	SNL 3144	5.3	308
C 3144 K	SBPN 3144	13.1	606
	ASBPN 3144	13.2	608
	SBPN 3144	13.3	610
	ASBPN 3144	13.4	612
C 3144 K + H 3144/7.15/16 TL	SNL 3144	5.2	278
C 3144 K + OH 3144 HTL	SNL 3144	5.1	230
C 3148	SNL 3148	5.3	310
C 3148 K	SBPN 3148	13.1	606
	SBPN 3148	13.3	610
C 3148 K + H 3148/8.15/16 TL	SNL 3148	5.2	280
C 3148 K + OH 3148 HTL	SNL 3148	5.1	232
C 3152	SNL 3152	5.3	310
C 3152 K	SBPN 3152	13.1	606
	ASBPN 3152	13.2	608
	SBPN 3152	13.3	610
	ASBPN 3152	13.4	612
C 3152 K + H 3152/9.1/2 TL	SNL 3152	5.2	282
C 3152 K + OH 3152 HTL	SNL 3152	5.1	234
C 3152 K + OH 3152/9.7/16 HTL	SNL 3152	5.2	280
C 3156	SNL 3156	5.3	312
C 3156 K + H 3156/10.1/2 TL	SNL 3156	5.2	284
C 3156 K + H 3156/10.7/16 TL	SNL 3156	5.2	284
C 3156 K + OH 3156 HTL	SNL 3156	5.1	236
C 3156 K + OH 3156/10 HTL	SNL 3156	5.2	282
C 3160	SNL 3160	5.3	312
C 3160 K	SBPN 3160	13.1	606
	ASBPN 3160	13.2	608
	SBPN 3160	13.3	610
	ASBPN 3160	13.4	612
C 3160 K + OH 3160 H	SNL 3160	5.1	238
C 3160 K + OH 3160/10.15/16 H	SNL 3160	5.2	286
C 3160 K + OH 3160/11 H	SNL 3160	5.2	286
C 3164 M	SNL 3164	5.3	314
C 3164 KM	SBPN 3164	13.1	606
	ASBPN 3164	13.2	608
	SBPN 3164	13.3	610
	ASBPN 3164	13.4	612
C 3164 KM + H 3164/12	SNL 3164	5.2	288
C 3164 KM + H 3164/11.15/16	SNL 3164	5.2	288
C 3164 KM + OH 3164 H	SNL 3164	5.1	240
C 3168 M	SNL 3168	5.3	314
C 3168 KM	SDM 3168	13.5	614
	SDM 3168	13.6	618
C 3168 KM + OH 3168 H	SNL 3168	5.1	242
C 3168 KM + OH 3168/12.1/2 H	SNL 3168	5.2	290
C 3168 KM + OH 3168/12.7/16 H	SNL 3168	5.2	290
C 3172 M	SNL 3172	5.3	316
C 3172 KM + H 3172/13.1/2	SNL 3172	5.2	294
C 3172 KM + H 3172/13.7/16	SNL 3172	5.2	292
C 3172 KM + OH 3172 H	SNL 3172	5.1	244
C 3176 KMB + OH 3176 HE	SNL 3176	5.1	246
C 3176 KMB + OH 3176/13.15/16 HE	SNL 3176	5.2	294
C 3176 KMB + OH 3176/14 HE	SNL 3176	5.2	296
C 3180 M	SNL 3180	5.3	320
C 3180 KM + H 3180/15	SNL 3180	5.2	296
C 3180 KM + OH 3180 H	SNL 3180	5.1	248
C 3184 M	SNL 3184	5.3	322
C 3184 KM	SDM 3184	13.5	614
	SDM 3184	13.6	618
C 3184 KM + H 3184/15.3/4	SNL 3184	5.2	298
C 3184 KM + OH 3184 H	SNL 3184	5.1	250
C 3188 KMB + OH 3188 HE	SNL 3188	5.1	252
C 3188 KMB + OH 3188/16.1/2 HE	SNL 3188	5.2	298
C 3192 M	SNL 3192	5.3	326
C 3192 KM + OH 3192 H	SNL 3192	5.1	254
C 3192 KM + OH 3192/17 H	SNL 3192	5.2	300
C 3196 KMB + OH 3196 HE	SNL 3196	5.1	256

Bearing designation	Housing / Pillow block / Bearing unit	Product table No.	Page
C 3196 KMB + OH 3196/18 HE	SNL 3196	5.2	300
C 3224	SNL 524-620	2.3	134
C 3224 K + H 2324 L	SNL 524-620	2.1	96
C 3224 K + HA 2324 L	SNL 524-620	2.2	116
C 3224 K + HE 2324 L	SNL 524-620	2.2	116
C 3232	SNL 532	2.3	136
	SNL 3038	5.3	302
C 3232 K + H 2332 L	SNL 532	2.1	98
	SNL 3038	5.1	222
C 3232 K + HA 2332 L	SNL 532	2.2	118
	SNL 3038	5.2	260
C 3232 K + HE 2332 L	SNL 532	2.2	118
	SNL 3038	5.2	260
C 3236	SNL 3236	5.3	304
C 3236 K + H 2336	SNL 3236	5.1	224
C 3236 K + HA 2336	SNL 3236	5.2	266
C 3236 K + HE 2336	SNL 3236	5.2	266
C 4024 V	SNLN 3024	4.2	180
C 4024-2CS5V	SNLN 3024	4.2	180
C 4026	SNLN 3026	4.2	180
C 4026-2CS5V	SNLN 3026	4.2	180
C 4028 V	SNLN 3028	4.2	180
C 4028-2CS5V	SNLN 3028	4.2	180
C 4030 V	SNLN 3030	4.2	180
C 4030-2CS5V	SNLN 3030	4.2	180
C 4032	SNLN 3032	4.2	182
C 4032-2CS5V	SNLN 3032	4.2	182
C 4036 V	SNL 3036	5.3	304
C 4036-2CS5V	SNL 3036	5.3	304
C 4038	SNL 3038	5.3	304
C 4038-2CS5V	SNL 3038	5.3	304
C 4040 V	SNL 3040	5.3	306
C 4040-2CS5V	SNL 3040	5.3	306
C 4044 V	SNL 3044	5.3	308
C 4060 M	SNL 3060	5.3	312
C 49/1000 MB1/VB569	SKND 49/1000	14.1	634
C 49/1060 MB1/VB569	SKND 49/1060	14.1	636
C 49/1120 MB1/VB569	SKND 49/1120	14.1	636
C 49/1180 MB1/VB569	SKND 49/1180	14.1	636
C 49/710 MB1/VB569	SKND 49/710	14.1	634
C 49/750 MB1/VB569	SKND 49/750	14.1	634
C 49/800 MB1/VB569	SKND 49/800	14.1	634
C 49/850 MB1/VB569	SKND 49/850	14.1	634
C 49/900 MB1/VB569	SKND 49/900	14.1	634
C 49/950 MB1/VB569	SKND 49/950	14.1	634

Bearing designation	Housing / Pillow block / Bearing unit	Product table No.	Page
Angular contact ball bearings			
7214 BECBP	PDP 214	12.2	576
7216 BECBP	PDP 216	12.2	576
7218 BECBP	PDP 218	12.2	576
7220 BECBP	PDP 220	12.2	576
7222 BECBP	PDP 222	12.2	576
7224 BCBM	PDP 224	12.2	576
Deep groove ball bearings			
6206	PDN 206	12.1	572
6207	PDN 207	12.1	572
6208	PDN 208	12.1	572
6210	PDN 210	12.1	572
6211	PDN 211	12.1	572
6212	PDN 212	12.1	572
6214	PDN 214	12.1	572
6215	PDN 215	12.1	572
6216	PDN 216	12.1	572
6218	PDN 218	12.1	574
6220	PDN 220	12.1	574
6222	PDN 222	12.1	574
6224	PDN 224	12.1	574
6305	PDN 305	12.1	572
6306	PDN 306	12.1	572
6307	PDN 307	12.1	572
6308	PDN 308	12.1	572
6309	PDN 309	12.1	572
6310	PDN 310	12.1	572
6311	PDN 311	12.1	572
6312	PDN 312	12.1	572
6313	PDN 313	12.1	572
6314	PDN 314	12.1	572
6315	PDN 315	12.1	572
	PDR 315	12.3	578
6316	PDN 316	12.1	572
	PDR 316	12.3	578
6317	PDN 317	12.1	574
	PDR 317	12.3	578
6318	PDN 318	12.1	574
	PDR 318	12.3	578
6319	PDN 319	12.1	574
	PDR 319	12.3	578
6320	PDN 320	12.1	574
	PDR 320	12.3	578
6322	PDN 322	12.1	574
	PDR 322	12.3	578
6324	PDN 324	12.1	574
	PDR 324	12.3	578
Cylindrical roller bearings			
NU 2214 ECP	PDP 214	12.2	576
NU 2216 ECP	PDP 216	12.2	576
NU 2218 ECP	PDP 218	12.2	576
NU 2220 ECP	PDP 220	12.2	576
NU 2222 ECP	PDP 222	12.2	576
NU 2224 ECP	PDP 224	12.2	576
NU 315 ECP	PDR 315	12.3	578
NU 316 ECP	PDR 316	12.3	578
NU 317 ECP	PDR 317	12.3	578
NU 318 ECP	PDR 318	12.3	578
NU 319 ECP	PDR 319	12.3	578
NU 320 ECP	PDR 320	12.3	578
NU 322 ECP	PDR 322	12.3	578
NU 324 ECP	PDR 324	12.3	578