SKF Energy Efficient Y-bearings and units

Minimize friction and maximize service life for optimized field performance





Optimized to reduce energy use and increase service life

The expanded SKF Energy Efficient (E2) Y-bearings and Y-bearing units line offers cost-effective solutions for reduced friction, reduced operating temperature and longer service life compared to standard Y-bearings.

SKF E2 Y-bearings

To meet the ever-increasing demand to reduce friction and energy use, SKF E2 Y-bearings are characterized by a frictional moment that is at least 50% lower when compared to the same-sized standard Y-bearing. This substantial reduction of the frictional moment is achieved by a highly effective contact seal and applying a specially formulated, low-friction grease. Due to the reduced frictional moment, SKF E2 Y-bearings run at up to 30 °C *(55 °F)* cooler than standard bearings, extending grease life and service life, where grease life is limiting.

Benefits
- Reduced energy use
- Reduced grease consumption
- Reduced environmental impact
- Longer service life
- Reduced maintenance
- Easy mounting
- Cost-effective

Typical applications
- Conveyors
- Industrial fans
- Textile machinery



Reduce total cost of ownership with SKF E2 Y-bearing units

In addition to the energy savings offered by SKF E2 Y-bearings, we have expanded our offering to meet more application needs for more customers. We now provide fully assembled SKF E2 Y-bearing units combining SKF E2 Y-bearings and SKF composite housings. Helping to reduce total cost of ownership, these lightweight, cost-effective and ready-to-mount units are particularly well suited for applications where high speeds, moderate loads, reliability and minimal maintenance are all key parameters.

Available with different combinations of SKF E2 Y-bearings and SKF composite housings, SKF E2 Y-bearing units are relubrication-free. They can be optimized for specific applications and conditions, helping customers reduce energy use and total cost of ownership.



SKF E2 Y-bearings



Engineered to promote sustainability

As the need to conserve energy becomes more important every day, any technology that enables even a small reduction in energy consumption is big news.

Drawing on over 100 years of engineering knowledge and unmatched expertise in the field of tribology and related sciences, SKF has created low-friction SKF Energy Efficient (E2) bearings.

Reduce friction – reduce energy use

The SKF Energy Efficient (E2) bearings are characterized by a minimum 30% reduction in the bearing's frictional moment when compared to a same-size SKF basic design bearing. However, in laboratory tests, SKF E2 Y-bearings have been shown to reduce frictional losses by at least 50%. This significant reduction in frictional losses is due, in part, to a new contact seal and a new, low-friction grease.

Longer service life lowers cost of ownership

Optimized to reduce frictional losses, SKF E2 Y-bearings will, in many applications, last longer than the same-size SKF basic design bearings. Depending on the operating conditions, the bearings will run up to 30 °C *(55 °F)* cooler. This will extend the service life of the grease, offering the potential to prolong the service life of the bearing when grease life is limiting. SKF E2 bearings are dimensionally interchangeable with SKF basic design bearings enabling easy upgrades of existing applications as well as improving the energy efficiency of new applications. SKF E2 Y-bearings are available in the YAR 2, YET 2 and YSP 2 series in both metric and inch sizes.

Test results

In tests conducted at SKF laboratories, the frictional moment and operating temperature of SKF E2 bearings were compared to same-size SKF basic design Y-bearings. The tests were designed to simulate common Y-bearing applications like industrial fans, conveyors and textile machines.

Diagram 1

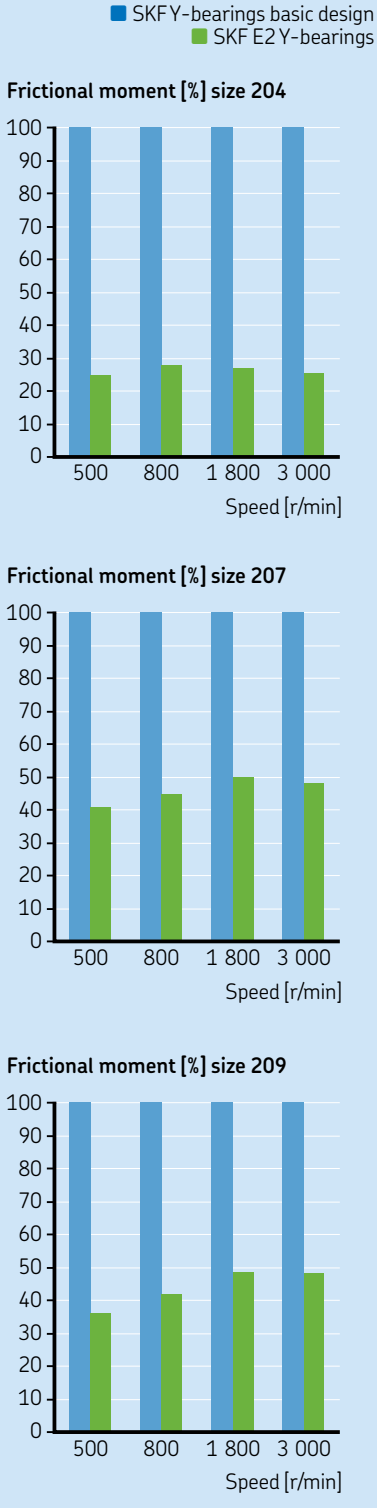

Diagram 2

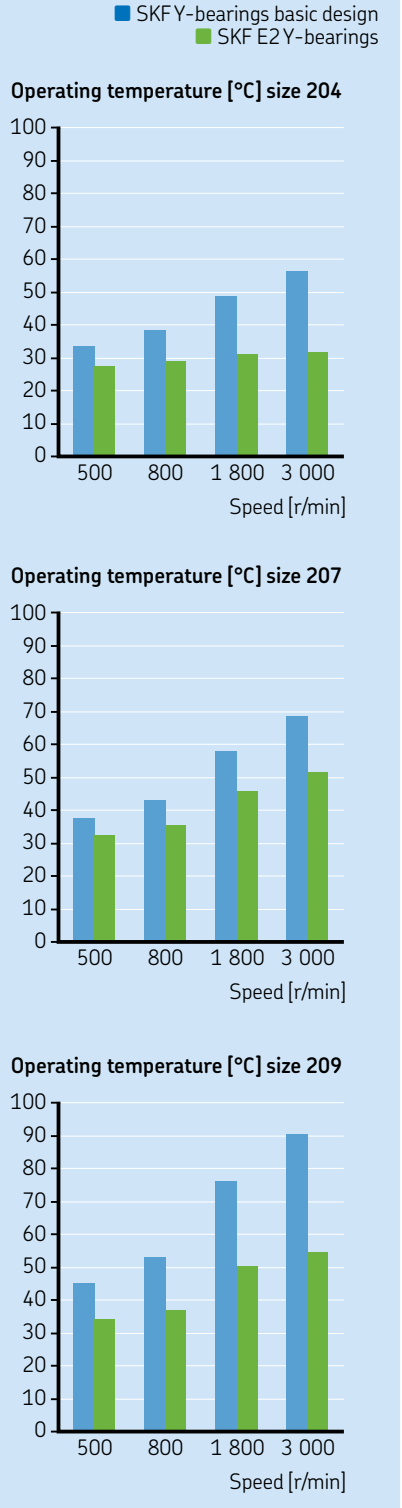

Frictional moment

The frictional moment of different size SKF E2 Y-bearings was measured at various speeds and compared to basic design SKF Y-bearings. The results (→ **diagram 1**) showed that for SKF E2 Y-bearings, there was a reduction in the frictional moment of at least 50% and in some cases the reduction was as high as 75%.

Operating temperature

In laboratory tests, the operating temperature of SKF E2 Y-bearings was compared to SKF basic design bearings under the same load and speed conditions. The tests showed (→ **diagram 2**) that SKF E2 bearings, depending on their speed, operate anywhere from 5 to 30 °C *(40 to 85 °F)* cooler than basic design bearings.

Grease service life

Reducing the operating temperature of a bearing has a significant impact on grease service life. As a rule of thumb, reducing the operating temperature by 15 °C *(59 °F)* doubles the service life of a grease. However, other factors that increase or decrease grease service life must be taken into consideration, including the particular grease being used, ambient temperature, operating temperature, load, speed and misalignment. **Diagram 3** shows the influence of temperature on grease service life.

Diagram 3

Influence of operating temperature on grease service life

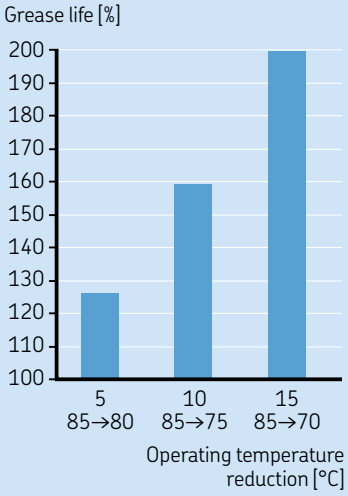

SKF E2 Y-bearing units

A composite housing

The SKF E2 Y-bearing units are composed of an SKF E2 Y-bearing and a composite housing made from a glass fibre reinforced polyamide material (→ **fig. 1**). These lightweight housings resist a variety of chemicals and diluted acids.

For durability, mechanical strength and thermal stability, SKF E2 Y-bearing units are reinforced with a steel coil moulded around the bearing bore and zinc coated steel liners in the mounting bolt holes. Consequently the radial breaking load is far greater than the basic static load rating of the SKF Y-bearing that can be fitted into it.

Long and reliable service life

SKF E2 Y-bearings are sealed and pre-lubricated with SKF GE2 grease, a low-noise, low-friction lithium-based grease and, under normal operating conditions, are considered to be lubricated for the life of the bearing. This long lasting, water-resistant grease combined with the highly effective integral seals and high performance design of appropriately selected SKF E2 Y-bearings can provide long, reliable service life without the costs and environmental issues of relubrication.

Fig. 1



SKF E2 Y-bearings | SKF composite housings | SKF E2 Y-bearing units

Fig. 2



Fig. 3



End covers: secure fit, operator safety

To comply with health and safety regulations, the SKF E2 Y-bearing units can be supplied with effective ECY end covers (→ **fig. 2**). The ECY end covers are made from polypropylene (PP), have good resistance to most chemicals and can withstand operating temperatures up to 100 °C. They can be snapped into the recesses provided in the housing bore.

Note that the end covers are not included with the Y-bearing units and must be ordered separately.

As a further option, the SKF E2 Y-bearing units can be also equipped with the white-coloured ECW design end covers (→ **fig. 3**). The ECW cover has an optional drainage hole that can be easily opened by the user as required. To determine the appropriate ECW end cover, please contact SKF application engineering service.

NOTE: Besides the SKF E2 Y-bearing units, the SKF composite housings are also available assembled with standard Y-bearings in YAR (grub screws) design. They can also be assembled with all available Y-bearing designs and materials including zinc coated and stainless steel bearings.

Please ask your sales representative for information.

Long-lasting, low-noise, low-friction high quality lithium-based grease for long and reliable service life

The spherical outside surface of the bearing and matching housing bore accommodate initial misalignment up to 5°

The inner ring, can be extended on one or both sides depending on the locking method



SKF E2 Y-bearing with low-friction seals

The coil provides additional mechanical strength and thermal stability

Dimensionally interchangeable with cast iron housings that conform to ISO 3228

Material up to 75% lighter than cast iron. Good resistance to chemicals and diluted acids

Mounting bolt holes reinforced with corrosion resistant Cr⁶ free zinc coated steel inserts for mechanical strength and thermal stability

Housing highlights

- Excellent corrosion resistance
- Tolerant of high and low temperatures
- Lightweight
- Dimensionally interchangeable with cast iron units
- Excellent UV resistance
- Paintable
- Recyclable
- Available with end covers

Fig. 4



Fig. 5



Fig. 6



*The SKF E2 Y-bearing units are available with plummer block (→ **fig. 4**), square flanged (→ **fig. 5**) or oval flanged (→ **fig. 6**) housings*

Technical recommendations

Main applications

SKF E2 Y-bearings and units are intended for those applications where reduced energy use is an important issue. Under normal operating conditions, these bearings run at lower temperature and have a considerably longer grease service life than an SKF standard design bearing. They can therefore also offer significantly reduced lubricant consumption where standard design bearings require relubrication. Typical applications include:

- conveyors
- industrial fans
- textile machinery

Calculating rated fatigue life for SKF bearings

The method used to calculate rated fatigue life is the same for both SKF E2 Y-bearings and basic design SKF Y-bearings. SKF recommends using the SKF rating life equations as described in the *SKF Rolling bearings catalogue* or online at *skf.com*.

Estimating grease service life

The service life of the grease in SKF E2 Y-bearings can be estimated using **diagram 4**. The estimate is based on an L_{10} grease life. This is defined as the period of time, at the end of which, 90% of a sufficiently large group of virtually identical bearings are still reliably lubricated.

The diagram provides grease life estimates based on operating temperature and speed and is valid under the following operating conditions:

- horizontal shaft
- very light to moderate loads ($P \leq 0{,}05\ C$)
- stationary machine
- low vibration levels

If operating conditions differ, the grease life obtained from the diagram has to be adjusted as follows:

- For vertical shafts, use 50% of the value from the diagram
- For heavier loads ($P > 0{,}05\ C$), use the reduction factors listed in **table 1**

The values for adjusting grease life are guideline values only and should not be used as a substitute for testing the bearing and grease in its application.

For additional information, refer to the chapter "Lubrication" in the *SKF Rolling bearings catalogue* or contact the SKF application engineering service.

Table 1

Reduction factor for the grease life, depending on the load

Load P	Reduction factor
≤ 0,05 C	1
0,1 C	0,7
0,125 C	0,5
0,25 C	0,2

Table 2

Bearing mean diameter d_m

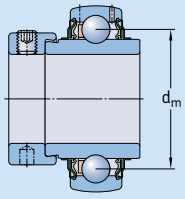

Bearing size[1]	**Mean bearing diameter** d_m
–	mm
04	33,5
05	39
06	46
07	53,5
08	60
09	65

[1] For example: bearing size 06 includes all bearings based on a Y 206 bearing, such as E2.YAR 206-2F, E2.YAR 206-101-2F, E2.YAR 206-102-2F, E2.YAR 206-103-2F, E2.YAR 206-104-2F

Relubrication of the bearing

Due to the effectiveness of the seal combined with lower operating temperatures, grease service life is sufficient under normal operating conditions for SKF E2 Y-bearings to be considered relubrication-free.

Relubrication can, however, extend service life where exceptional operating conditions mean that grease life would otherwise be limiting, for example where high loads, speeds, operating temperatures, levels of vibration or contamination prevail. Please contact the SKF application engineering service for more information.

NOTE: Although SKF E2 Y-bearings can be relubricated through holes provided for this purpose in their outer rings, the composite housings in which they are mounted when supplied as units do not have provision for relubrication. Therefore, if it is required for SKF E2 Y-bearings to be relubricated in service, they must be used separately from SKF composite housings.

To maintain the benefits of the SKF Energy Efficient solutions, SKF E2 Y-bearings should be relubricated with SKF LEGE 2 low-friction grease.

When relubricating, the shaft should be turned and grease should be pumped slowly until fresh grease starts to escape from the seal(s).

NOTE: Pumping too quickly can build up excessive pressure and damage the seals.

Diagram 4

Grease life for SKF Energy Efficient Y-bearings
where load P = 0,05 C

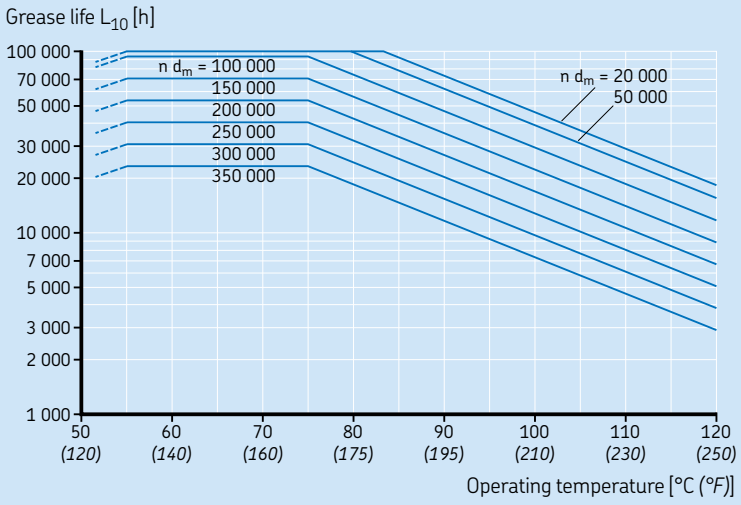

n = rotational speed [r/min]
d_m = mean diameter [mm] → **table 2**



Product data

SKF E2 Y-bearings

SKF E2 Y-bearings are available in three different series with different locking methods. E2.YAR 2 bearings, with the grub screw locking method, and E2.YET 2, with the eccentric collar locking method, are available for metric shafts from 20 to 45 mm and for inch shafts from 3/4 to 1 3/4 for inches. E2.YSP 2 bearings, with the SKF ConCentra locking method, are available for metric shafts from 25 to 45 mm and for inch shafts from 1 to 1 11/16 inches.

Additions to the assortment will be based on customer demand. For the most up-to-date information, contact your local SKF representative or visit *skf.com/bearings*.

Designs

Seals and grease fill

SKF E2 Y-bearings are supplied with a low-friction contact seal.

The seal is fitted in a recess in the bearing outer ring and seals against the inner ring land. The seal is made from acrylonitrile-butadiene rubber and reinforced with a sheet steel insert.

The seal lip, which has a thin and flexible design, minimizes the frictional moment, while effectively protecting the bearing from contaminants. The sheet steel insert protects against solid contaminants.

Bearings in the E2.YAR 2 and E2.YSP 2 series use the new low-friction contact seal design but also have a plain sheet steel flinger on the outboard side of the seal. The flinger, which has an interference fit on the inner ring, further protects the seal lip without increasing friction.

Fig. 7

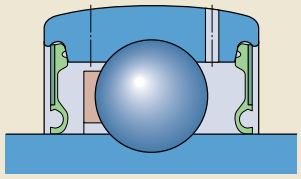

SKF E2 Y-bearings are supplied filled with a special low-noise, low-friction SKF grease (→ **table 3**).

Cages

SKF E2 Y-bearings are fitted with a ball centred snap-type cage made of a glass fibre reinforced composite polymer.

Table 3

Technical specifications of SKF GE2 grease

Grease	Temperature range[1)]	Thickener	Base oil type	NLGI consistency class	Base oil viscosity [mm²/s] at 40 °C (105 °F)	at 100 °C (210 °F)
	–50 0 50 100 150 200 250 °C					
GE2	0 100 200 300 400 500 °F –50 50 150 250 350 450	Lithium soap	Synthetic	**2**	25	**4,9**

[1)] Refer to the SKF traffic light concept → **skf.com/bearings**

Bearing data

Dimensions and tolerances

SKF E2 Y-bearings are dimensionally interchangeable with basic design SKF Y-bearings and are manufactured according to the precision class defined in ISO 9628.

Load carrying capacity

SKF E2 Y-bearings have the same basic dynamic and static load ratings as same-size SKF basic design Y-bearings.

Permissible speeds

SKF E2 Y-bearings should not operate above the limiting speeds listed in the product tables. For Y-bearings with grub screws or an eccentric locking collar, the permissible speed is influenced by the shaft tolerance. When using these bearings on shafts with wider tolerances than h6, compare the speed values listed in the product tables with those in **table 4**. The lower value is the permissible speed.

For applications operating at higher speeds or when low vibration levels or quiet running are required, SKF recommends using SKF E2 bearings with SKF ConCentra locking technology.

Internal clearance

SKF E2 Y-bearings in the YAR 2 and YET 2 series are manufactured with a radial internal clearance in accordance with ISO 9628: Group N. SKF E2 Y-bearings in the YSP 2 series are manufactured with a radial internal clearance in accordance with ISO 9628: Group 3 (→ **table 5**).

Table 4

Permissible speeds for SKF E2 Y-bearings with grub screws or an eccentric locking collar

Bearing size[1]	Permissible speed for shafts machined to tolerance class			
	h7Ⓔ	h8Ⓔ	h9Ⓔ	h11Ⓔ
–	r/min			
04	5 300	3 800	1 300	850
05	4 500	3 200	1 000	700
06	4 000	2 800	900	630
07	3 400	2 200	750	530
08	3 000	1 900	670	480
09	2 600	1 700	600	430

Table 5

Radial internal clearance for SKF E2 Y-bearings

Bearing size[1]		Radial internal clearance of Y-bearings in the series			
		E2.YAR 2, E2.YET 2		E2.YSP 2	
from	to	min.	max.	min.	max.
–		mm			
04	**04**	12	28	–	–
05	**06**	12	28	23	41
07	**08**	13	33	28	46
09		14	36	30	51

[1] For example: bearing size 06 includes all bearings based on a Y 206 bearing, such as E2.YAR 206-2F, E2.YAR 206-101-2F, E2.YAR 206-102-2F, E2.YAR 206-103-2F, E2.YAR 206-104-2F

Product data

SKF E2 Y-bearing units

Axial displacement

SKF E2 Y-bearing units can accommodate only very limited axial displacement resulting, for example, from thermal elongation of the shaft. The distance between bearing positions should therefore be short or the units should be supported by resilient sheet metal support surfaces or walls to prevent them from being subjected to excessive stresses as a result of thermal elongation of the shaft.

Misalignment

SKF E2 Y-bearing units can accommodate initial misalignment of up to 5°. Additionally, operational shaft deflections of a few minutes or arc can be permitted.

Support surfaces

To maximize the service life of SKF E2 Y-bearings units, SKF recommends finishing support surfaces to a roughness of $R_a \leq 12{,}5$ µm and a flatness (planicity) that meets IT7 specifications. For moderate demands IT8 may be satisfactory.

Fig. 8

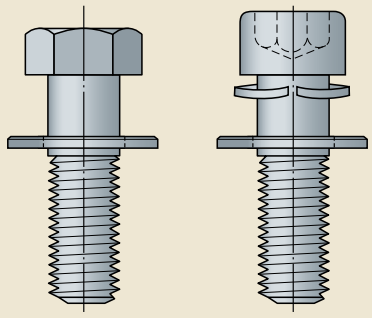

Attaching to the support surface

To attach SKF E2 Y-bearing units to the support surface, SKF recommends using 8.8 class bolts or studs and a washer to ISO 7089:2000 or 7090:2000 and a spring washer. Hexagonal head bolts in accordance with ISO 4014:1999 are appropriate. Alternatively, hexagonal socket head cap screws in accordance with ISO 4762:1988 can be used (→ **fig. 8**).

Fig. 9

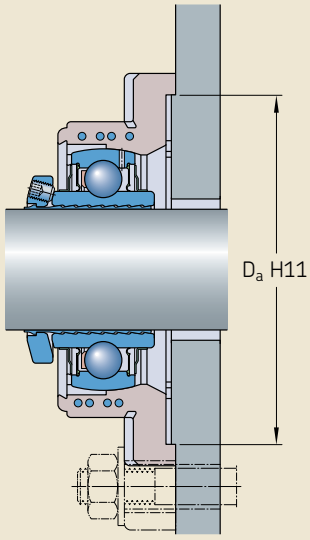

Recommended fastener metric thread sizes are listed in product tables. SKF E2 Y-bearing units with plummer block housings have two bolt holes in their base for attachment bolts. SKF E2 Y-bearing units with a flanged housing have a recess (→ **fig. 9**), at the back for accurate positioning, on an appropriate centring ring provided by one of the following methods:

- machining the wall accordingly (→ **fig. 10**)
- attaching an appropriate centring ring to the wall (→ **fig. 11**). A centring ring relieves the attachment bolts of radial loads

Fig. 10

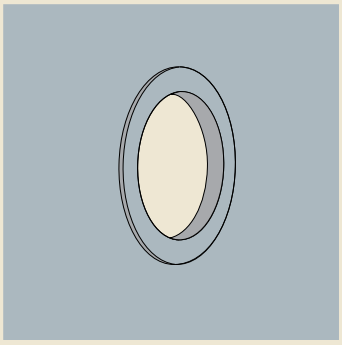

Fig. 11

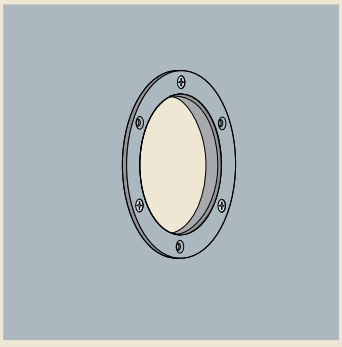

Fig. 12

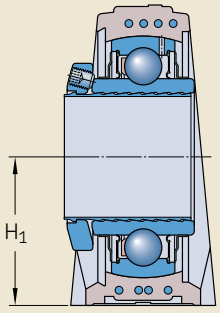

Dimensions

The boundary dimensions of SKF E2 Y-bearings housings conform to ISO 3228:1993. The housings are dimensionally interchangeable with SKF Y-bearing plummer block housings in the SY series and SKF Y-bearing flanged housings in the FY, FYT, FYTB series.

Tolerances

SKF E2 Y-bearing units with plummer block housings (SYK series)
The tolerances for the shaft centre height H_1 (→ **fig. 12**) above the support surface are:

- ± 0,25 mm for units with a bore diameter up to and including 40 mm

The tolerance for the shaft centre height corresponds to the values specified in ISO 3228:1993.

SKF E2 Y-bearing units with flanged housings (FYK, FYTBK series)
The tolerance for the total width T of the unit (→ **fig. 13**) is ± 0,5.

Fig. 13

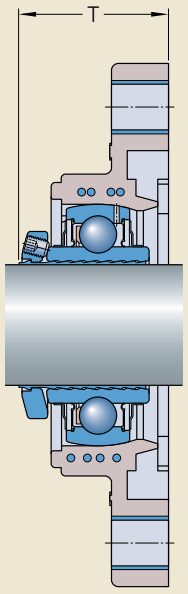

Load carrying ability

SKF E2 Y-bearing units are able to withstand the same dynamic and static loads as the SKF E2 Y-bearings they incorporate. These Y-bearing units can also be used in applications where shock loads or variable axial loads occur.

Locking methods

The SKF E2 Y-bearings and units are available with three different locking methods.

Grub screw locking

This locking method is based on two grub (set) screws positioned 120° apart on the inner ring (→ **fig 14**). The lock is achieved by tightening the two-cup point hexagonal grub screws to the recommended torque value. This method enables very easy mounting and dismounting, even if space is limited. This locking method is typically used in applications where the direction of rotation alternates.

Eccentric locking collar

SKF E2 Y-bearings with an eccentric locking collar are intended primarily for use in applications where the direction of rotation is constant. On one side, the extended inner ring of the bearing has an eccentric step (→ **fig 15**). The step accommodates the locking collar. Turning the locking collar in the direction of rotation locks the collar and bearing onto the shaft. A single grub screw further secures the collar to the shaft.

The SKF ConCentra locking method

SKF E2 Y-bearings with SKF ConCentra locking method have an inner ring symmetrically extended on both sides. The patented SKF ConCentra locking technology is based on the expansion and contraction of two mating surfaces: the bearing bore and the external surface of the stepped sleeve. Both surfaces have precision-engineered serrations.

When the grub screws in the mounting collar are tightened, the inner ring is displaced axially relative to the stepped sleeve (→ **fig 16**). This forces the bearing inner ring to expand and the stepped sleeve to contract evenly, providing a true concentric fit on the shaft. SKF ConCentra Y-bearings provide an easy, quick and reliable way to lock a bearing onto a shaft.

The true concentric fit on the shaft reduces noise and vibration levels and virtually eliminates fretting corrosion. Even more important is that the fit on the shaft does not loosen, even in applications where there are heavy loads and/or high speeds. The shaft tolerance does not limit the permissible bearing speed and the full limiting speed can be achieved, even when using commercial grade shafts. The bearings can be used in applications for both constant and alternating direction of rotation.

Fig. 14

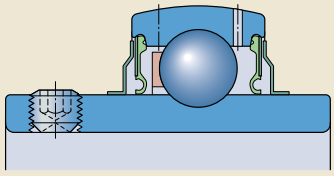

Fig. 15

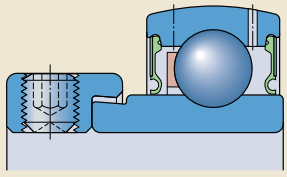

Fig. 16

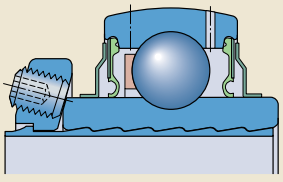

Mounting and dismounting

When mounting Y-bearings on a shaft, suitable tools should be used. For SKF E2 Y-bearings and units with SKF ConCentra locking method, mounting kits are available from SKF (designation 626830) which include mounting instructions, hexagonal keys and torque indicators. SKF ConCentra mounting kits have to be ordered separately from the bearing or unit.

Read these instructions completely prior to starting work

NOTE: SKF E2 Y-bearing units are product assemblies. For SKF E2 Y-bearing units, with the SKF ConCentra locking method, no attempt should be made to disassemble the sleeve and the mounting collar from the bearing prior to installation.

These mounting instructions will allow you to achieve an appropriate fit to a shaft complying with SKF diameter tolerance recommendations. Please refer to *SKF catalogue Y-bearings and Y-bearing units* or *skf.com*. For SKF E2 Y-bearings with SKF ConCentra locking method, following these mounting instructions will achieve a concentric fit with the appropriate degree of interference to commercial grade shafts.

When mounting OR dismounting, SKF recommends removing all the weight from the bearing using slings or jacks, and securing the shaft to prevent it from rotating.

WARNING!
To minimize the risk of injury during mounting or dismounting, turn off power and perform lockout/tagout procedures so that machine does not unexpectedly start.

Mounting instructions

1 Remove any burrs on the shaft with emery cloth or a fine file, wipe clean with a cloth and check the shaft diameter (→ **fig. 17**).

2 Mount any components on the shaft that are between the two bearings or unit positions.

3 Clean the base of the unit and its support surface (→ **fig. 18**), making sure that the support surface is flat and smooth. Flatness should be within IT7 and roughness $R_a \leq 12{,}5$ mm. In case of pillow block units, if the elevation must be adjusted by shims, the shims must extend the full length and width of the base of the unit.

4 Slide the first bearing unit onto the shaft orientating it to make sure that the locking device will be accessible for tightening (→ **fig. 19**).

NOTE: The locking collars of E2 Y-bearing units with eccentric collar locking are separate prior to mounting. In case these units have to be mounted with their locking device inboard or if access to the locking side of the inner ring of these units will not be available, it will be necessary to slide the locking collar onto the shaft, in the correct orientation prior to, or when mounting the unit.

Fig. 17

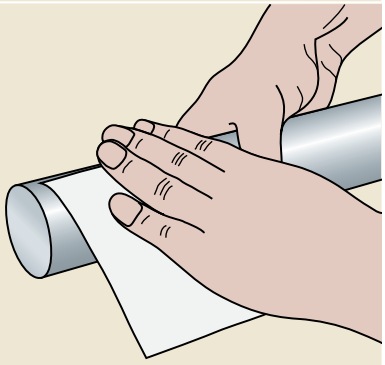

Fig. 18

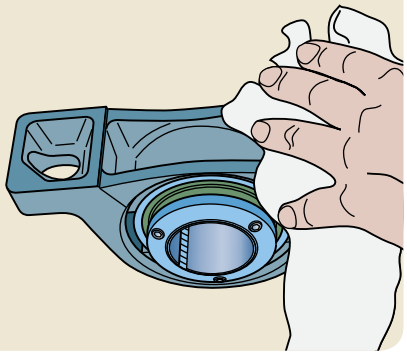

Fig. 19

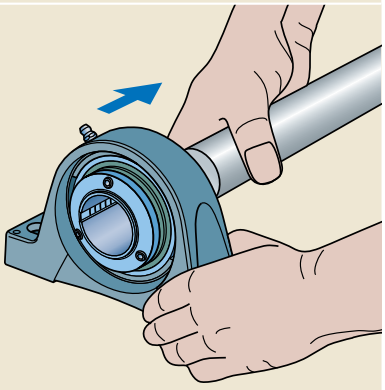

Mounting and dismounting

5 Locate the second bearing unit on the shaft following **steps 3** and **4**. For pillow block units, carefully align both units and then fully tighten the attachment bolts in the housing base. Fasten flanged units securely to the machine wall using, when available, the centring recess machined at the housing back.

6 Align the shaft in the bearing arrangement axially and, if possible, turn it a few times.

7 Secure the bearing units to the shaft by tightening the bearing locking device.

7.1 Grub screws locking device

Tighten the grub screws in the inner rings of both units to the tightening torque indicated in **table 6**.

7.2 Eccentric locking collar

- Place the eccentric locking collars on the inner ring extension of both Y-bearing units and rotate to tighten them against the inner ring, in the main direction of rotation.
- Tighten the locking collars to their final position, using a hook spanner engaging the hole in the circumference of the collar.
- Tighten the grub screw in the eccentric locking collars of both Y-bearing units to the tightening torque indicated in **table 6**.

7.3 SKF ConCentra

- Start to secure the first bearing unit to the shaft by positioning the collar so that a grub screw is directly opposite the split in the sleeve. Tighten the screws finger tight, holding the short leg of the supplied hexagonal key (→ **fig. 20**).
- Tighten the screws 1/4 turn following the tightening pattern in **fig. 21**. Do this twice. Then tighten each set screw, starting with the screw opposite the split in the sleeve, until the long end of the hexagonal key comes in contact with the supplied torque indicator (→ **fig. 22**) or to the recommended torque value shown in **table 7**.
- Secure the second bearing unit to the shaft repeating the above two steps. Make sure the shaft turns smoothly and the bearings are not jammed. If the shaft does not turn smoothly, loosen one of the bearing units following the dismounting instructions and secure it again.

8 If applicable, snap the end cover in place.

Fig. 20

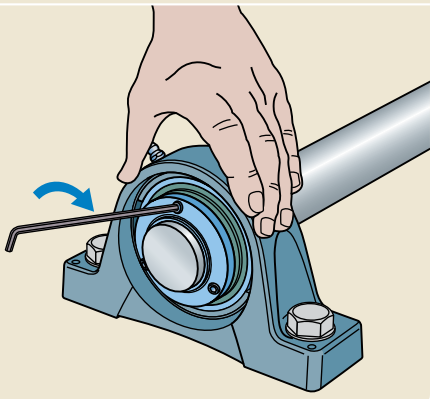

Fig. 21

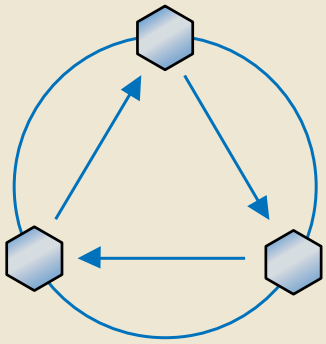

Fig. 22

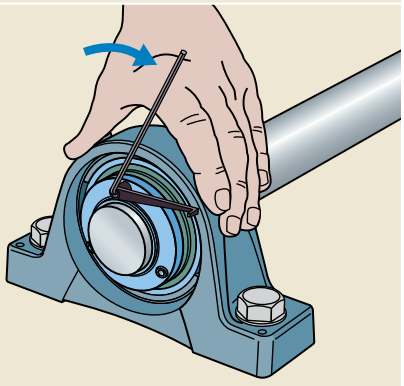

CAUTION!
Do not use auxiliary equipment such as a hammer or pipe to tighten the screws.

Table 6

Hexagonal keys to tighten grub screws in inner rings or eccentric locking collars – sizes and tightening torques

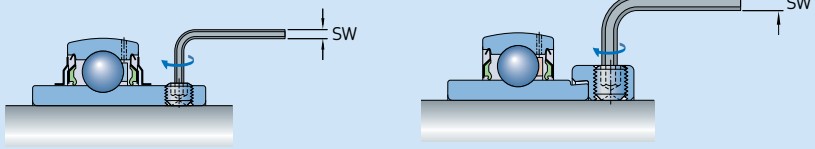

Bearing size[1]	Bearing or unit with metric bore		Bearing or unit with inch bore		Bearing size[1]	Bearing or unit with metric bore		Bearing or unit with inch bore	
	Hex key size SW	Tightening torque	Hex key size SW	Tightening torque		Hex key size SW	Tightening torque	Hex key size SW	Tightening torque
–	mm	Nm	inch	Nm	–	mm	Nm	inch	Nm
Bearings in the E2.YAR series, units with designation suffix TEF					**Bearings in the E2.YET series, units with designation suffix FE**				
04	3	4	1/8	4	**04**	3	4	1/8	4
05	3	4	1/8	4	**05**	3	4	1/8	4
06	3	4	1/8	4	**06**	4	6,5	5/32	6,5
07	3	4	5/32	6,5	**07**	5	16,5	3/16	16,5
08	4	6,5	5/32	6,5	**08**	5	16,5	3/16	16,5
09	4	6,5	5/32	6,5	**09**	5	16,5	3/16	16,5

[1] For example: bearing size 06 includes all bearings based on a Y 206 bearing, such as:
E2.YAR 206-101-2F, E2.YAR 206-102-2F, E2.YAR 206-2F, E2.YAR 206-103-2F, E2.YAR 206-104-2F

Table 7

Recommended tightening torque values for SKF ConCentra locking system

Bearing size [1]		Screw size	Recommended torque
from	to		high
–		–	Nm/in.lbf
05	06	M5	4,2/37
07	09	M6	7,4/66

[1] For example: bearing size 07 includes all bearings based on a Y 207 e.g. E2.YSP 207 SB-2F, E2.YSP 207-104 SB-2F, E2.YSP 207-106 SB-2F, E2.YSP 207-107 SB-2F

Dismounting instructions

1 It may be necessary to clean the shaft extension with emery cloth to remove rust or repair surface damage.

2 Unlock the bearing units from the shaft by releasing the bearing locking device.

2.1 Grub screws locking device

- Loosen the screws on both the units.
- Loosen and remove the attachment bolts and slide the units off the shaft.

2.2 Eccentric locking collar

- Loosen the screw in the eccentric locking collars of both the units.
- Rotate the eccentric locking collars and slide them off the shaft.
- Loosen and remove the attachment bolts and slide the units off the shaft.

2.3 SKF ConCentra

- Loosen the screws on the first unit.
- Lightly tap the sleeve edge on the mounting collar side of the bearing until the locking system releases the shaft. As an alternative, tap on the bearing inner ring side face on the side opposite the collar.
- Loosen and remove the attachment bolts and slide the unit off the shaft.
- Repeat the above 3 steps for the second unit.

Designations

The complete designation for the SKF E2 Y-bearings and SKF E2 Y-bearing units consists of:

- Prefix "E2." for the E2 Y-bearings only
- Prefixes, identifying the Y-bearings or Y-bearing units series
- Figures, identifying the sizes
- Suffixes, identifying design and variants

More details about SKF E2 Y-bearings and SKF E2 Y-bearing units can be obtained in **tables 8** and **9**.

Table 8

Designation system for SKF E2 Y-bearings

Examples
E2.YAR 205-2F — **E2. YAR 2 05 -2F**
E2.YET 208 — **E2. YET 2 08**
E2.YSP 206-103 SB-2F — **E2. YSP 2 06-103 SB -2F**

Prefixes
E2 SKF Energy Efficient

Basic designation
Bearing series
YAR Bearing with grub screws, inner ring extended on both sides
YET Bearing with an eccentric-looking collar, inner ring extended on one side
YSP Bearing with SKF ConCentra locking technology, inner ring symmetrically extended on both sides

Dimension series
2 Outside diameter to ISO 15, diameter series 2

Bore diameter (d)
Bearings for metric shafts
04 20 mm bore diameter
to
09 45 mm bore diameter

Bearings for inch shafts
Three-digit combination that follows the designation of the basic metric bearing and is separated from this by a hyphen. The first digit is the number of whole inches and the second and third digits are the number of sixteenths of an inch, e.g. 205-100.

–103 1 in. and 3 sixteenth *(30,163 mm)*

Suffixes
Internal Design
SB SKF ConCentra ball bearing, with short inner ring

External design sealing system
-2F Contact seal, additional plain flinger on both sides

Table 9

Designation system for SKF E2 Y-bearing units

Examples

SYK 25 TEF	**SY K 25 TE F**
FYK 40 FE	**FY K 40 FE**
FYTBK 30 LEF	**FY TB K 30 LE F**

Basic designation

Identification of housing type

SY	Plummer block housing
FY	Square flange (4-bolt) housing

Identification of housing design

–	Base version; when flanged, square flange
TB	Flanged unit oval type

Identification of housing material

K	Composite

Identification of size

	Bearing units for metric shafts: in millimeters uncoded
20	20 mm bore diameter
	to
40	40 mm bore diameter

Suffixes

Identification of inserted Y-bearing

TE	SKF E2 Y-bearing with grub screws, inner ring extended on both sides
FE	SKF E2 Y-bearing with an eccentric locking collar, inner ring extended on one side
LE	SKF E2 Y-bearing with SKF ConCentra locking technology, inner ring symmetrically extended on both sides

External design sealing system

F	Seal with flinger on both sides

SKF E2 Y-bearings with grub screws, metric shafts

d 20 – 45 mm

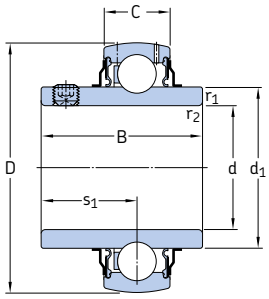

Dimensions							Basic load ratings		Fatigue load limit	Limiting speed	Mass	Designation
							dynamic	static		with shaft tolerance		
d	D	B	C	d_1	s_1	$r_{1,2}$	C	C_0	P_u	h6		
mm						min	kN		kN	r/min	kg	–
20	47	31	14	28,2	18,3	0,6	12,7	6,55	0,28	8 500	0,14	E2.YAR 204-2F
25	52	34,1	15	33,7	19,8	0,6	14	7,8	0,335	7 000	0,19	E2.YAR 205-2F
30	62	38,1	18	39,7	22,2	0,6	19,5	11,2	0,475	6 300	0,30	E2.YAR 206-2F
35	72	42,9	19	46,1	25,4	1	25,5	15,3	0,655	5 300	0,44	E2.YAR 207-2F
40	80	49,2	21	51,8	30,2	1	30,7	19	0,8	4 800	0,59	E2.YAR 208-2F
45	85	49,2	22	56,8	30,2	1	33,2	21,6	0,915	4 300	0,65	E2.YAR 209-2F

SKF E2 Y-bearings with grub screws, inch shafts

d 3/4 – 1 3/4 in.

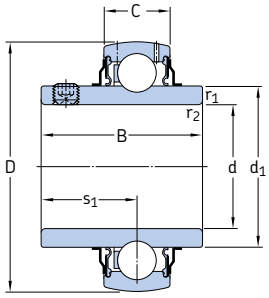

Dimensions							Basic load ratings		Fatigue load limit	Limiting speed	Mass	Designation
							dynamic	static		with shaft tolerance		
d	D	B	C	d_1	s_1	$r_{1,2}$	C	C_0	P_u	h6		
in./mm	mm					min	kN		kN	r/min	kg	–
3/4	47	31	14	28,2	18,3	0,6	12,7	6,55	0,28	8 500	0,14	E2.YAR 204-012-2F
19,05												
7/8	52	34,1	15	33,7	19,8	0,6	14	7,8	0,335	7 000	0,21	E2.YAR 205-014-2F
22,225												
15/16	52	34,1	15	33,7	19,8	0,6	14	7,8	0,335	7 000	0,2	E2.YAR 205-015-2F
23,813												
1	52	34,1	15	33,7	19,8	0,6	14	7,8	0,335	7 000	0,18	E2.YAR 205-100-2F
25,4												
1 1/16	62	38,1	18	39,7	22,2	0,6	19,5	11,2	0,475	6 300	0,34	E2.YAR 206-101-2F
26,988												
1 1/8	62	38,1	18	39,7	22,2	0,6	19,5	11,2	0,475	6 300	0,32	E2.YAR 206-102-2F
28,575												
1 3/16	62	38,1	18	39,7	22,2	0,6	19,5	11,2	0,475	6 300	0,29	E2.YAR 206-103-2F
30,163												
1 1/4	62	38,1	18	39,7	22,2	0,6	19,5	11,2	0,475	6 300	0,27	E2.YAR 206-104-2F
31,75	72	42,9	19	46,1	25,4	1	25,5	15,3	0,655	5 300	0,5	E2.YAR 207-104-2F
1 5/16	72	42,9	19	46,1	25,4	1	25,5	15,3	0,655	5 300	0,47	E2.YAR 207-105-2F
33,338												
1 3/8	72	42,9	19	46,1	25,4	1	25,5	15,3	0,655	5 300	0,44	E2.YAR 207-106-2F
34,925												
1 7/16	72	42,9	19	46,1	25,4	1	25,5	15,3	0,655	5 300	0,41	E2.YAR 207-107-2F
36,513	80	49,2	21	51,8	30,2	1	30,7	19	0,8	4 800	0,68	E2.YAR 208-107-2F
1 1/2	80	49,2	21	51,8	30,2	1	30,7	19	0,8	4 800	0,64	E2.YAR 208-108-2F
38,1	85	49,2	22	56,8	30,2	1	33,2	21,6	0,915	4 300	0,82	E2.YAR 209-108-2F
1 9/16	80	49,2	21	51,8	30,2	1	30,7	19	0,8	4 800	0,6	E2.YAR 208-109-2F
39,688												
1 5/8	85	49,2	22	56,8	30,2	1	33,2	21,6	0,915	4 300	0,75	E2.YAR 209-110-2F
41,275												
1 11/16	85	49,2	22	56,8	30,2	1	33,2	21,6	0,915	4 300	0,71	E2.YAR 209-111-2F
42,863												
1 3/4	85	49,2	22	56,8	30,2	1	33,2	21,6	0,915	4 300	0,67	E2.YAR 209-112-2F
44,45												

SKF E2 Y-bearings with an eccentric locking collar, metric shafts

d 20 – 45 mm

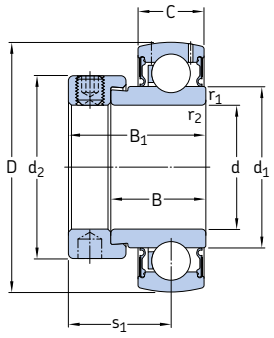

Dimensions									Basic load ratings		Fatigue load limit	Limiting speed	Mass	Designation
									dynamic	static		with shaft tolerance		
d	D	B	B_1	C	d_1	d_2	s_1	$r_{1,2}$	C	C_0	P_u	h6		
mm								min	kN		kN	r/min	kg	–
20	47	21,5	31	14	28,2	32,4	24,0	0,6	12,7	6,55	0,28	8 500	0,16	**E2.YET 204**
25	52	21,5	31	15	33,7	37,4	23,5	0,6	14	7,8	0,335	7 000	0,19	**E2.YET 205**
30	62	23,8	35,7	18	39,7	44,1	26,7	0,6	19,5	11,2	0,475	6 300	0,30	**E2.YET 206**
35	72	25,4	38,9	19	46,1	51,1	29,4	1	25,5	15,3	0,655	5 300	0,44	**E2.YET 207**
40	80	30,2	43,7	21	51,8	56,5	33,2	1	30,7	19	0,8	4 800	0,60	**E2.YET 208**
45	85	30,2	43,7	22	56,8	62	32,7	1	33,2	21,6	0,915	4 300	0,66	**E2.YET 209**

SKF E2 Y-bearings with an eccentric locking collar, inch shafts

d 3/4 – 1 3/4 in.

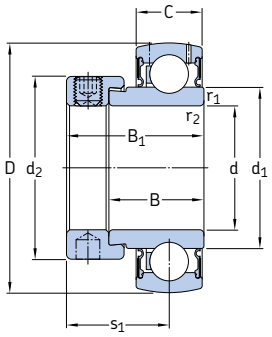

Dimensions									Basic load ratings		Fatigue load limit	Limiting speed	Mass	Designation
									dynamic	static		with shaft tolerance		
d	D	B	B_1	C	d_1	d_2	s_1	$r_{1,2}$	C	C_0	P_u	h6		
in./mm	mm							min	kN		kN	r/min	kg	–
3/4 19,05	47	21,5	31	14	28,2	32,4	24	0,6	12,7	6,55	0,28	8 500	0,16	**E2.YET 204-012**
1 25,4	52	21,5	31	15	33,7	37,4	23,5	0,6	14	7,8	0,335	7 000	0,18	**E2.YET 205-100**
1 1/8 28,575	62	23,8	35,7	18	39,7	44,1	26,7	0,6	19,5	11,2	0,475	6 300	0,32	**E2.YET 206-102**
1 3/16 30,163	62	23,8	35,7	18	39,7	44,1	26,7	0,6	19,5	11,2	0,475	6 300	0,3	**E2.YET 206-103**
1 1/4 31,75	62 72	23,8 25,4	35,7 38,9	18 19	39,7 46,1	44,1 51,1	26,7 29,4	0,6 1	19,5 25,5	11,2 15,3	0,475 0,655	6 300 5 300	0,27 0,48	**E2.YET 206-104** **E2.YET 207-104**
1 3/8 34,925	72	25,4	38,9	19	46,1	51,1	29,4	1	25,5	15,3	0,655	5 300	0,43	**E2.YET 207-106**
1 7/16 36,513	72	25,4	38,9	19	46,1	51,1	29,4	1	25,5	15,3	0,655	5 300	0,4	**E2.YET 207-107**
1 1/2 38,1	80	30,2	43,7	21	51,8	56,5	33,2	1	30,7	19	0,8	4 800	0,62	**E2.YET 208-108**
1 11/16 42,863	85	30,2	43,7	22	56,8	62	32,7	1	33,2	21,6	0,915	4 300	0,69	**E2.YET 209-111**
1 3/4 44,45	85	30,2	43,7	22	56,8	62	32,7	1	33,2	21,6	0,915	4 300	0,65	**E2.YET 209-112**

SKF E2 Y-bearings with SKF ConCentra locking method, metric shafts

d 25 – 45 mm

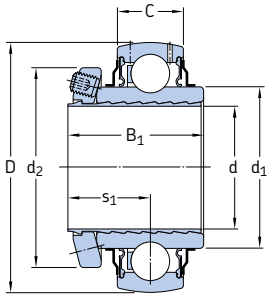

Dimensions							Basic load ratings		Fatigue load limit	Limiting speed	Mass	Designation
							dynamic	static				
d	D	B_1[1]	C	d_1	d_2	s_1[1]	C	C_0	P_u			
mm		~		~		~	kN		kN	r/min	kg	–
25	52	33,2	15	33,7	41,7	21,0	14	7,8	0,335	8 500	0,18	E2.YSP 205 SB-2F
30	62	37	18	39,7	48	23,0	19,5	11,2	0,475	7 500	0,3	E2.YSP 206 SB-2F
35	72	39,5	19	46,1	57	24,3	25,5	15,3	0,655	6 300	0,44	E2.YSP 207 SB-2F
40	80	42,9	21	51,8	62	25,9	30,7	19	0,8	5 600	0,59	E2.YSP 208 SB-2F
45	85	44	22	56,8	67	26,5	33,2	21,6	0,915	5 000	0,64	E2.YSP 209 SB-2F

[1] Width/distance before the grub screw is tightened (sleeve and inner ring bore at starting position).

SKF E2 Y-bearings with SKF ConCentra locking method, inch shafts

d 1 – 1 1/16 in.

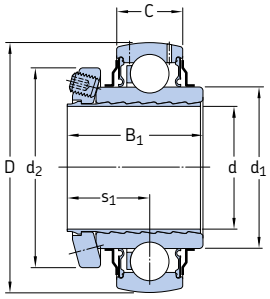

Dimensions							Basic load ratings		Fatigue load limit	Limiting speed	Mass	Designation
							dynamic	static				
d	D	B_1[1]	C	d_1	d_2	s_1[1]	C	C_0	P_u			
in./mm	mm	~		~		~	kN			r/min	kg	–
1 25,4	52	33,2	15	33,7	41,7	21	14	7,8	0,335	8 500	0,18	E2.YSP 205-100 SB-2F
1 3/16 30,163	62	37	18	39,7	48	23	19,5	11,2	0,475	7 500	0,29	E2.YSP 206-103 SB-2F
1 1/4 31,75	72	39,5	19	46,1	57	24,3	25,5	15,3	0,655	6 300	0,49	E2.YSP 207-104 SB-2F
1 3/8 34,925	72	39,5	19	46,1	57	24,3	25,5	15,3	0,655	6 300	0,44	E2.YSP 207-106 SB-2F
1 7/16 36,513	72	39,5	19	46,1	57	24,3	25,5	15,3	0,655	6 300	0,41	E2.YSP 207-107 SB-2F
1 1/2 38,1	80	42,9	21	51,8	62	25,9	30,7	19	0,8	5 600	0,58	E2.YSP 208-108 SB-2F
1 11/16 42,863	85	44	22	56,8	67	26,5	33,2	21,6	0,915	5 000	0,69	E2.YSP 209-111 SB-2F

[1] Width/distance before the grub screw is tightened (sleeve and inner ring bore at starting position).

SKF E2 Y-bearing units with square flanged composite housing and eccentric locking collar, for metric shafts

d 20 – 40 mm

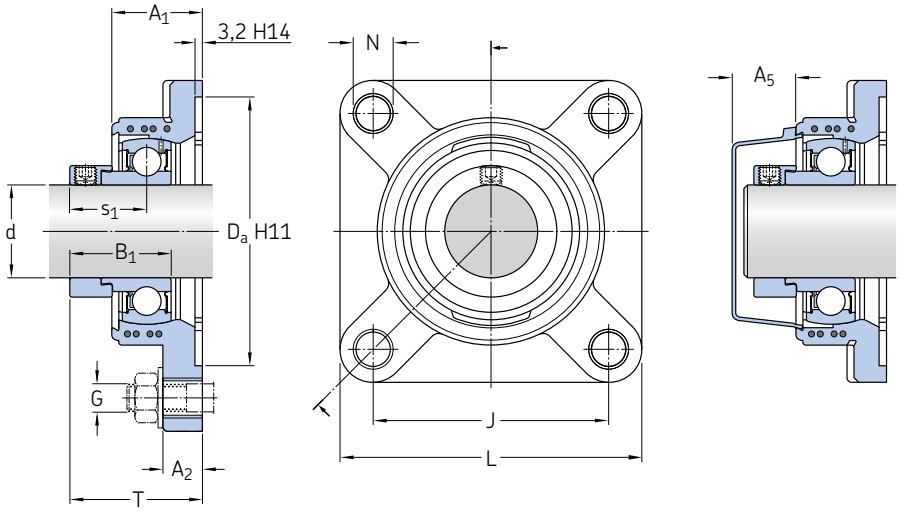

Dimensions

d	A_1	A_2	B_1	Da	J	L	N	G	s_1	T	A_5
mm											
20	30	15	31	68,3	63.5	86	12,3	M10	23,9	42,9	18,5
25	31	15	30,9	74,6	70	95	12,3	M10	23,4	42,4	18
30	33	15,3	35,6	93,7	82,5	108	12,3	M10	26,6	46,6	20
35	35	17	38,8	106,4	92	118	14,8	M12	29,3	50,3	22
40	39	17	43,6	115,9	101,5	130	14,8	M12	33,1	57,1	23,5

Basic load ratings		Fatigue load limit	Limiting speed	Mass	Housing designation	Bearing designation	Appropriate end cover designation	Unit designation
dynamic	static							
C	C_0	P_u						
kN		kN	r/min	kg	–	–	–	–
12,7	6,55	0,28	8 500	0,28	FYK 504	E2.YET 204	ECY 204	**FYK 20 FE**
14	7,8	0,335	7 000	0,33	FYK 505	E2.YET 205	ECY 205	**FYK 25 FE**
19,5	11,2	0,475	6 300	0,51	FYK 506	E2.YET 206	ECY 206	**FYK 30 FE**
25,5	15,3	0,655	5 300	0,68	FYK 507	E2.YET 207	ECY 207	**FYK 35 FE**
30,7	19	0,8	4 800	0,88	FYK 508	E2.YET 208	ECY 208	**FYK 40 FE**

SKF E2 Y-bearing units with square flanged composite housing and SKF ConCentra locking method, for metric shafts

d 25 – 40 mm

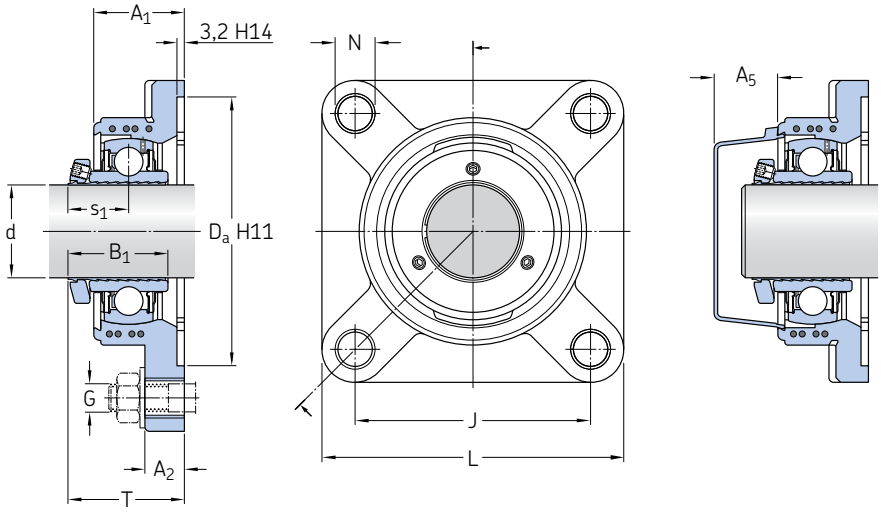

Dimensions

d	A_1	A_2	B_1 [1]	Da	J	L	N	G	s_1 [1]	T	A_5
mm			~						~		
25	31	15	33,2	74,6	70	95	12,3	M10	21,2	40,2	18
30	33	15,3	37	93,7	82,5	108	12,3	M10	23,2	43,2	20
35	35	17	39,5	106,4	92	118	14,8	M12	24,5	45,5	22
40	39	17	42,9	115,9	101,5	130	14,8	M12	26,2	50,2	23,5

[1] Width/distance before the grub screw is tightened (sleeve and inner ring bore at starting position).

Basic load ratings		Fatigue load limit	Limiting speed	Mass	Housing designation	Bearing designation	Appropriate end cover designation	Unit designation
dynamic	static							
C	C_0	P_u						
kN		kN	r/min	kg	–	–	–	–
14	7,8	0,335	8 500	0,32	FYK 505	E2.YSP 205 SB-2F	ECY 205	**FYK 25 LEF**
19,5	11,2	0,475	7 500	0,49	FYK 506	E2.YSP 206 SB-2F	ECY 206	**FYK 30 LEF**
25,5	15,3	0,655	6 300	0,68	FYK 507	E2.YSP 207 SB-2F	ECY 207	**FYK 35 LEF**
30,7	19	0,8	5 600	0,87	FYK 508	E2.YSP 208 SB-2F	ECY 208	**FYK 40 LEF**

SKF E2 Y-bearing units with square flanged composite housing and grub screws, for metric shafts

d 25 – 40 mm

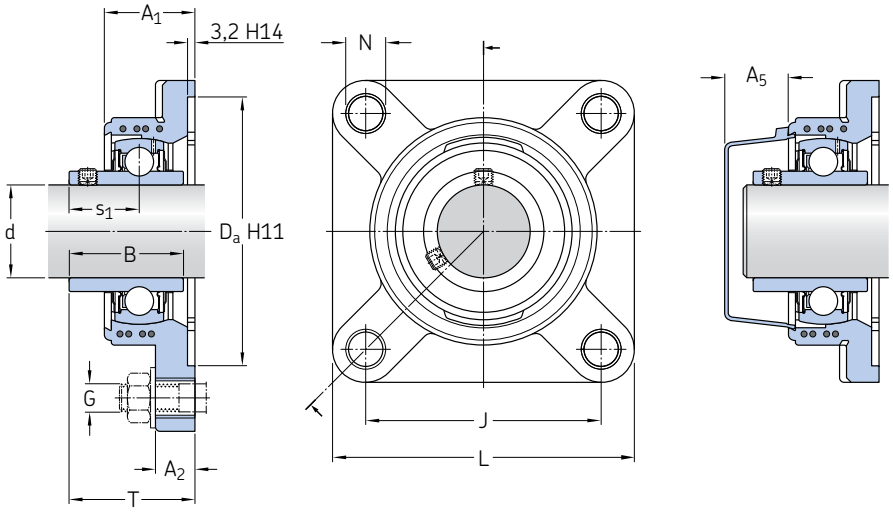

Dimensions

d	A_1	A_2	B	Da	J	L	N	G	s_1	T	A_5
mm											
20	30	15	31	68,3	63,5	86	12,3	M10	18,3	37,3	18,5
25	31	15	34,1	74,6	70	95	12,3	M10	19,8	38,8	18
30	33	15,3	38,1	93,7	82,5	108	12,3	M10	22,2	42,2	20
35	35	17	42,9	106,4	92	118	14,8	M12	25,4	46,4	22
40	39	17	49,2	115,9	101,5	130	14,8	M12	30,2	54,2	23,5

Basic load ratings		Fatigue load limit	Limiting speed	Mass	Housing designation	Bearing designation	Appropriate end cover designation	Unit designation
dynamic	static							
C	C_0	P_u						
kN		kN	r/min	kg	–	–	–	–
12,7	6,55	0,28	8 500	0,26	FYK 504	E2.YAR 204-2F	ECY 204	**FYK 20 TEF**
14	7,8	0,335	7 000	0,33	FYK 505	E2.YAR 205-2F	ECY 205	**FYK 25 TEF**
19,5	11,2	0,475	6 300	0,49	FYK 506	E2.YAR 206-2F	ECY 206	**FYK 30 TEF**
25,5	15,3	0,655	5 300	0,67	FYK 507	E2.YAR 207-2F	ECY 207	**FYK 35 TEF**
30,7	19	0,8	4 800	0,88	FYK 508	E2.YAR 208-2F	ECY 208	**FYK 40 TEF**

SKF E2 Y-bearing units with oval flanged composite housing and eccentric locking collar, for metric shafts

d 20 – 35 mm

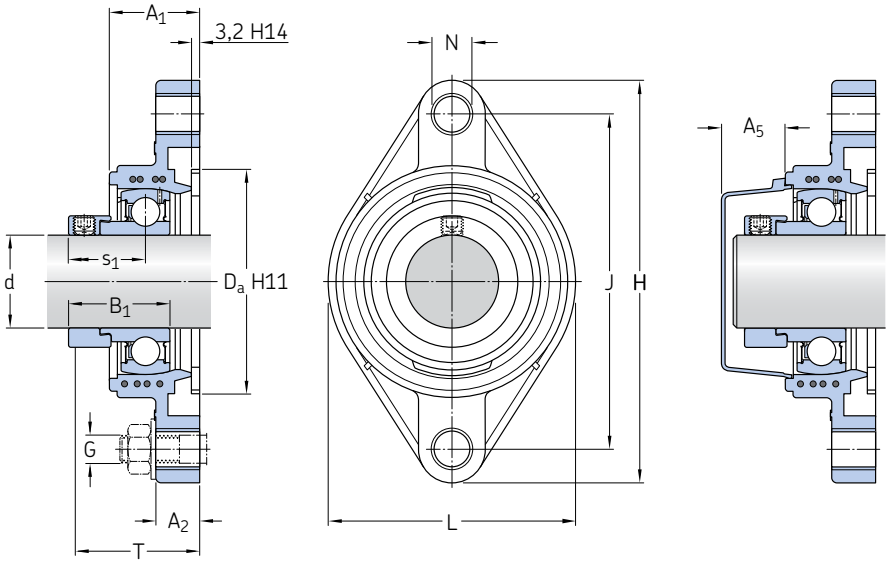

Dimensions

d	A_1	A_2	B_1	Da	H	J	L	N	G	s_1	T	A_5
mm												
20	29,5	15	31	50,8	112	90	60,5	12,3	M10	23,9	42,9	18.5
25	30	15	30,9	63,5	124	99	70	12,3	M10	23,4	42,4	18
30	33	15	35,6	76,2	142,5	116,5	83	12,3	M10	26,6	46,6	20
35	35	17	38,8	88,9	156	130	96	14,8	M12	29,3	50,3	22

Basic load ratings		Fatigue load limit	Limiting speed	Mass	Housing designation	Bearing designation	Appropriate end cover designation	Unit designation
dynamic	static							
C	C_0	P_u						
kN		kN	r/min	kg	–	–	–	–
12,7	6,55	0,28	8 500	0,24	FYTBK 504	E2.YET 204	ECY 204	**FYTBK 20 FE**
14	7,8	0,335	7 000	0,29	FYTBK 505	E2.YET 205	ECY 205	**FYTBK 25 FE**
19,5	11,2	0,475	6 300	0,45	FYTBK 506	E2.YET 206	ECY 206	**FYTBK 30 FE**
25,5	15,3	0,655	5 300	0,63	FYTBK 507	E2.YET 207	ECY 207	**FYTBK 35 FE**

SKF E2 Y-bearing units with oval flanged composite housing and SKF ConCentra locking method, for metric shafts

d 25 – 35 mm

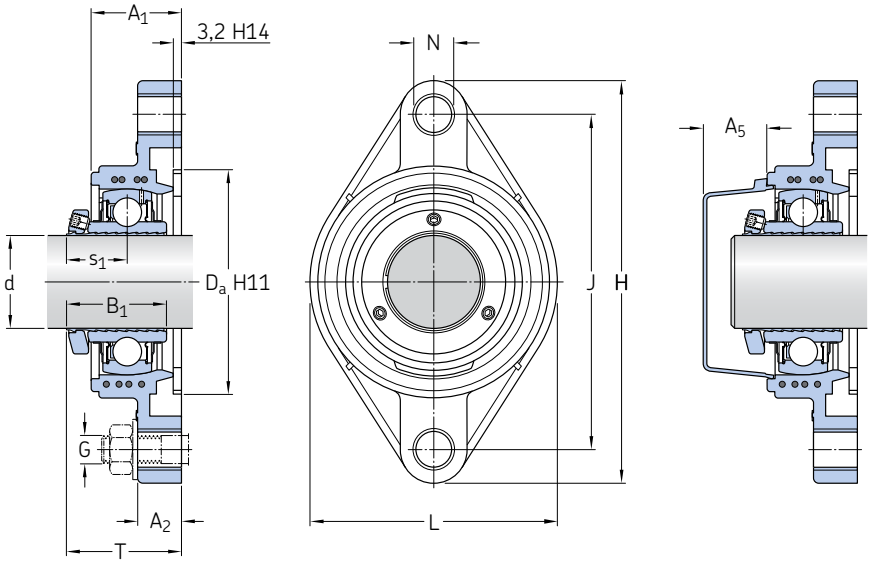

Dimensions

d	A_1	A_2	B_1[1)]	Da	H	J	L	N	G	s_1[1)]	T	A_5
mm			~							~		
25	30	15	33.2	63,5	124	99	70	12,3	M10	21,2	40,2	18
30	33	15	37	76,2	142,5	116,5	83	12,3	M10	23,2	43,2	20
35	35	17	39.5	88,9	156	130	96	14,8	M12	24,5	45,5	22

1) Width/distance before the grub screw is tightened (sleeve and inner ring bore at starting position).

Basic load ratings		Fatigue load limit	Limiting speed	Mass	Housing designation	Bearing designation	Appropriate end cover designation	Unit designation
dynamic	static							
C	C_0	P_u						
kN		kN	r/min	kg	–	–	–	–
14	7,8	0,335	8 500	0,28	FYTBK 505	E2.YSP 205 SB-2F	ECY 205	**FYTBK 25 LEF**
19,5	11,2	0,475	7 500	0,44	FYTBK 506	E2.YSP 206 SB-2F	ECY 206	**FYTBK 30 LEF**
25,5	15,3	0,655	6 300	0,62	FYTBK 507	E2.YSP 207 SB-2F	ECY 207	**FYTBK 35 LEF**

SKF E2 Y-bearing units with oval flanged composite housing and grub screws, for metric shafts

d 20 – 35 mm

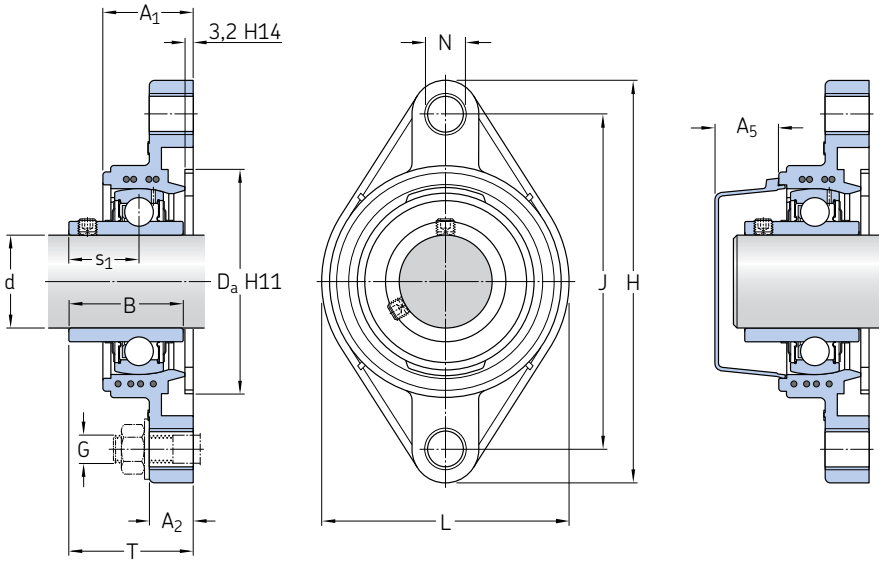

Dimensions

d	A_1	A_2	B	Da	H	J	L	N	G	s_1	T	A_5
mm												
20	29,5	15	31	50,8	112	90	60.5	12,3	M10	18,3	37,3	18,5
25	30	15	34,1	63,5	124	99	70	12,3	M10	19,8	38,8	18
30	33	15	38,1	76,2	142,5	116,5	83	12,3	M10	22,2	42,2	20
35	35	17	42,9	88,9	156	130	96	14,8	M12	25,4	46,4	22

Basic load ratings		Fatigue load limit	Limiting speed	Mass	Housing designation	Bearing designation	Appropriate end cover designation	Unit designation
dynamic	static							
C	C_0	P_u						
kN		kN	r/min	kg	–	–	–	–
12,7	6,55	0,28	8 500	0,23	FYTBK 504	E2.YAR 204-2F	ECY 204	**FYTBK 20 TEF**
14	7,8	0,335	7 000	0,29	FYTBK 505	E2.YAR 205-2F	ECY 205	**FYTBK 25 TEF**
19,5	11,2	0,475	6 300	0,44	FYTBK 506	E2.YAR 206-2F	ECY 206	**FYTBK 30 TEF**
25,5	15,3	0,655	5 300	0,62	FYTBK 507	E2.YAR 207-2F	ECY 207	**FYTBK 35 TEF**

SKF E2 Y-bearing units with plummer block composite housing and eccentric locking collar, for metric shafts

d 20 – 40 mm

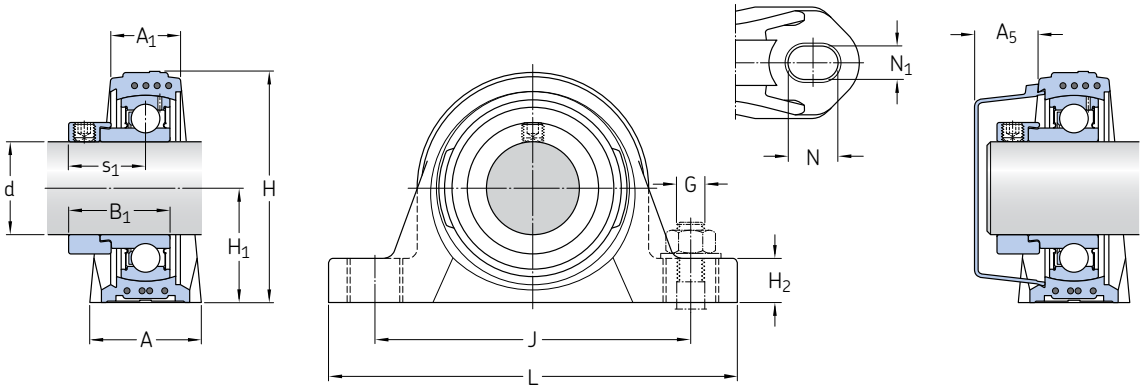

Dimensions

d	A	A_1	B_1	H	H_1	H_2	J	L	N	N_1	G	s_1	A_5
mm													
20	32	21	31	64	33,3	16	96	126	17,6	12,4	M10	23,9	18,5
25	32	22	30,9	70,5	36,5	16	105	134	17,6	12,4	M10	23,4	18
30	40	25	35,6	82	42,9	19	121	159	21,4	14,4	M12	26,6	20
35	45	27	38,8	93	47,6	19	126	164	21,4	14,4	M12	29,3	22
40	48	30	43,6	99	49,2	19	136	176	21,4	14,4	M12	33,1	23,5

Basic load ratings		Fatigue load limit	Limiting speed	Mass	Housing designation	Bearing designation	Appropriate end cover designation	Unit designation
dynamic	static							
C	C_0	P_u						
kN		kN	r/min	kg	–	–	–	–
12,7	6,55	0,28	8 500	0,26	SYK 504	E2.YET 204	ECY 204	**SYK 20 FE**
14	7,8	0,335	7 000	0,31	SYK 505	E2.YET 205	ECY 205	**SYK 25 FE**
19,5	11,2	0,475	6 300	0,50	SYK 506	E2.YET 206	ECY 206	**SYK 30 FE**
25,5	15,3	0,655	5 300	0,69	SYK 507	E2.YET 207	ECY 207	**SYK 35 FE**
30,7	19	0,8	4 800	0,86	SYK 508	E2.YET 208	ECY 208	**SYK 40 FE**

SKF E2 Y-bearing units with plummer block composite housing and SKF ConCentra locking method, for metric shafts

d 25 – 40 mm

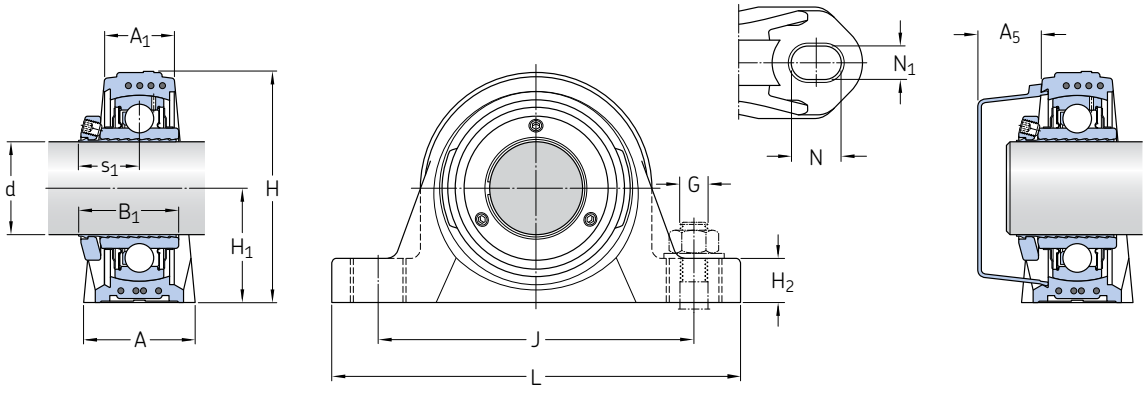

Dimensions

d	A	A_1	B_1[1]	H	H_1	H_2	J	L	N	N_1	G	s_1[1]	A_5
mm			~									~	
25	32	22	33,2	70,5	36,5	16	105	134	17,6	12,4	M10	21,2	18
30	40	25	37	82	42,9	19	121	159	21,4	14,4	M12	23,2	20
35	45	27	39,5	93	47,6	19	126	164	21,4	14,4	M12	24,5	22
40	48	30	42,9	99	49,2	19	136	176	21,4	14,4	M12	26,2	23,5

[1] Width/distance before the grub screw is tightened (sleeve and inner ring bore at starting position).

Basic load ratings		Fatigue load limit	Limiting speed	Mass	Housing designation	Bearing designation	Appropriate end cover designation	Unit designation
dynamic	static							
C	C_0	P_u						
kN		kN	r/min	kg	–	–	–	–
14	7,8	0,335	8 500	0,30	SYK 505	E2.YSP 205 SB-2F	ECY 205	**SYK 25 LEF**
19,5	11,2	0,475	7 500	0,48	SYK 506	E2.YSP 206 SB-2F	ECY 206	**SYK 30 LEF**
25,5	15,3	0,655	6 300	0,68	SYK 507	E2.YSP 207 SB-2F	ECY 207	**SYK 35 LEF**
30,7	19	0,8	5 600	0,85	SYK 508	E2.YSP 208 SB-2F	ECY 208	**SYK 40 LEF**

SKF E2 Y-bearing units with plummer block composite housing and grub screws, for metric shafts

d 20 – 40 mm

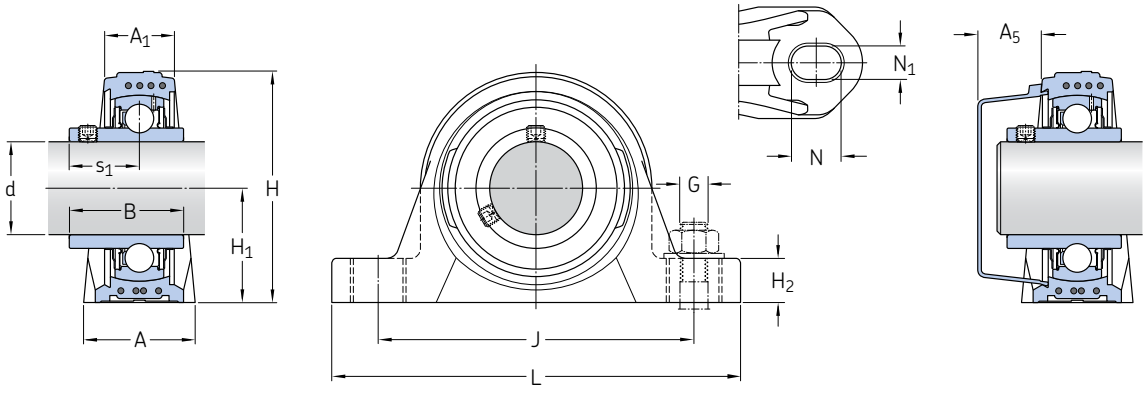

Dimensions

d	A	A_1	B	H	H_1	H_2	J	L	N	N_1	G	s_1	A_5
mm													
20	32	21	31	64	33,3	16	96	126	17,6	12,4	M10	18,3	18,5
25	32	22	34,1	70,5	36,5	16	105	134	17,6	12,4	M10	19,8	18
30	40	25	38,1	82	42,9	19	121	159	21,4	14,4	M12	22,2	20
35	45	27	42,9	93	47,6	19	126	164	21,4	14,4	M12	25,4	22
40	48	30	49,2	99	49,2	19	136	176	21,4	14,4	M12	30,2	23,5

Basic load ratings		Fatigue load limit	Limiting speed	Mass	Housing designation	Bearing designation	Appropriate end cover designation	Unit designation
dynamic	static							
C	C_0	P_u						
kN		kN	r/min	kg	–	–	–	–
12,7	6,55	0,28	8 500	0,25	SYK 504	E2.YAR 204-2F	ECY 204	**SYK 20 TEF**
14	7,8	0,335	7 000	0,31	SYK 505	E2.YAR 205-2F	ECY 205	**SYK 25 TEF**
19,5	11,2	0,475	6 300	0,48	SYK 506	E2.YAR 206-2F	ECY 206	**SYK 30 TEF**
25,5	15,3	0,655	5 300	0,68	SYK 507	E2.YAR 207-2F	ECY 207	**SYK 35 TEF**
30,7	19	0,8	4 800	0,86	SYK 508	E2.YAR 208-2F	ECY 208	**SYK 40 TEF**

skf.com | skf.com/yb

® SKF is a registered trademark of the SKF Group.

© SKF Group 2016
The contents of this publication are the copyright of the publisher and may not be reproduced (even extracts) unless prior written permission is granted. Every care has been taken to ensure the accuracy of the information contained in this publication but no liability can be accepted for any loss or damage whether direct, indirect or consequential arising out of the use of the information contained herein.

PUB BU/P2 12759/5 EN · May 2016

Certain image(s) used under license from Shutterstock.com

SKF®