SKF FX Keyless Bushings



Contents

The SKF brand now stands for more than ever before, and means more to you as a valued customer.

While SKF maintains its leadership as a high-quality bearing manufacturer throughout the world, new dimensions in technical advances, product support and services have evolved SKF into a truly solutions-oriented supplier, creating greater value for customers.

These solutions enable customers to improve productivity, not only with breakthrough application-specific products, but also through leading-edge design simulation tools and consultancy services, plant asset efficiency maintenance programmes, and the industry's most advanced supply management techniques.

The SKF brand still stands for the very best in rolling bearings, but it now stands for much more.

SKF – the knowledge engineering company

1 Foreword

Introduction 3

Traditional connections 3

2 Product information

About SKF FX Keyless Bushings 4

A truly innovative concentric locking technology 4

Minimum hub diameter calculation 4

SKF FX Keyless Bushings models 6

3 Product data

Product tables 8

4 Additional information

SKF – the knowledge engineering company 30

SKF FX Keyless Bushings

Introduction

SKF FX Keyless Bushings are designed to secure gears, couplings and pulleys to a shaft using mechanical friction rather than using traditional keyways, splines or an interference fit. In general, the size of a shaft is dependant on a number of factors. If splines or keyways are cut into a shaft, the shaft is weakened and a larger-than-necessary shaft must be specified. If, however, the objective is to reduce shaft size, weight, machining costs and installation time while improving accuracy and reliability, SKF FX Keyless Bushings are an excellent solution.

SKF FX Keyless Bushings are available in 16 different designs, enabling machine designers to match the best bushing solution to the application. The bushings, which are made from high quality steel, meet SKF standards for precision and quality.

SKF FX Keyless Bushings are designed to accurately and effectively mount components to a shaft. These components, which normally require sophisticated broaching or milling techniques to prepare the shaft, can now be mounted with a minimum amount of machining. This not only saves time, it can also significantly reduce production costs.

In the past, the torque capacity of an application was limited by the keyway, spline or interference fit. The use of keyways meant that over-designed shafts were used to accomodate the structural loss of strength (→ **fig. 1**). As a consequence, shaft costs increased considerably.

However, SKF FX Keyless Bushings have changed that by placing torque limits on the design of the hub and material of the shaft.

Fig. 1

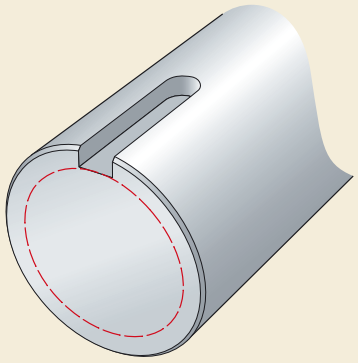

For keyed bushings, the shaft diameters need to be increased by 10 % to cover the expected weakening caused by the keyways

Fig. 2

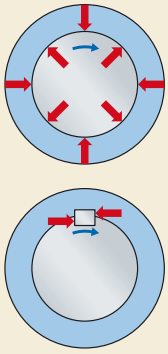

Traditional connections

Traditional connections

Traditional connections include interference fits (also called press fits and shrink fits) keyways, keyed bushing systems, QD and tapered bushings (→ **fig. 2**).

Interference fits offer some advantages, like zero backlash and uniform contact pressures. Interference fits also have distinct disadvantages such as extended fit lengths and the need for extremely close machining tolerances of the shaft and component bore. Also, depending on on the size of the shaft, the use of a press or heat source might be necessary. In addition, maintenance is often difficult and components can seldom be reused.

Keys and keyways have been around for quite some time and keyed tapered bushings are especially popular around the globe as the same basic bushing can be accommodated on different shaft sizes. Keys and keyways are relatively easy to prepare, quick to install and provide a low cost solution. Although they are commonly used, they are surprisingly ineffective. When keyways are cut into components and shafts, they reduce the cross section and, consequently, the strength of the machined parts. As a result, any shafts, gears or pulleys containing a keyway must be oversized to compensate for the reduced cross section. Keys and keyways require a clearance fit on several planes. The combined effect of these clearances is backlash, which in some cases can enlarge the keyways, while promoting fatigue failures and fretting corrosion.

About SKF FX Keyless Bushings

SKF FX Keyless Bushings are designed to create an interference fit with uniform contact pressure on shafts and components that must be fixed to the shaft. The design offers true zero backlash installation and has none of the problems associated with keyways. SKF FX Keyless Bushings make it easy to mount components with a cylindrical (non-tapered) bore to standard, plain shafting and can even be mounted over an existing keyway if necessary.

These bushings, which can accommodate wide component tolerances, can considerably reduce machining and material costs.

In addition, SKF FX Keyless Bushings are easy to adjust axially and radially, and are simple to install and remove.

A truly innovative concentric locking technology

The concept behind SKF FX Keyless Bushings is based on two inclined planes working against each other. As a series of screws or a single hexagonal nut is tightened, two steel rings with inclined serrations are displaced axially. This forces one steel ring to expand in the component bore while the other ring contracts evenly around the shaft. The result is a true concentric, tight fit.

The near perfect 360 degree grip on the shaft and in the component bore eliminates shaft damage and the possibility of fretting corrosion.

Minimum hub diameter calculation

SKF FX Keyless Bushings use opposing inclined planes to apply pressure on a shaft and hub. This pressure can be quite significant and could exceed the material strength of the hub and shaft. The shaft values are only critical if the shaft is hollow, but, in all cases, the forces on the hub must be calculated.

When calculating the minimum hub diameter, the length and shape of a hub influences the results. The data required to calculate the minimum hub diameter are:

- The hub surface pressure from the product tables for each size
- Select the shape factor based on the installation setup (→ **fig. 3**)
- The hub material yield strength (→ **table 1**)

To calculate the required minimum hub diameter for each application, follow the example below.

Example

With an application using a selected model PHF FX10-50X80. From the product table, the listed hub surface pressure (P_n N/mm^2) is *115 N/mm^2*.

- This bushing requires a centering hub (→ **fig. 3**), Shape factor *f = 0,8*.
- The hub, made from mild steel, has a material yield strength of *220 N/mm^2* (→ **table 1**).
- From **table 2**, we can determine the factor for the ratio to be applied to the hub diameter *1,56*, which has to be multiplied by D.
- The minimum hub diameter is 80 mm × 1,56 = 124,8 mm for full power transmission capability.

Table 1

Material yield strength values

Yield strength	Material
N/mm^2	–
180	Cast iron
600	SG iron
220	Mild steel
550	Gear steel
195–225	18/8 Austenitic stainless steel
565–608	Cast steels 0,3% carbon
95–125	Aluminium
180	Aluminium alloy Hs 30W
415	4,5% Cu – Aluminium alloy

Shape factor based on installation setup

Fig. 3

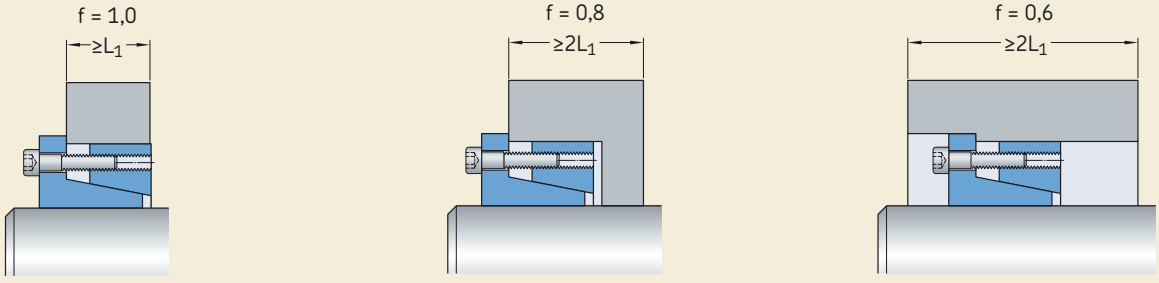

Narrow hubs with length ≥ L_1

Wider hubs with centering guides, length ≥ $2L_1$

Wider hubs without centering guides, length ≥ $2L_1$

Table 4

Ratio selection chart for minimum hub diameter

Hub surface pressure	Shape factor	Material yield strength, σ [N/mm²] σ = 150	σ = 180	σ = 200	σ = 220	σ = 250	σ = 270	σ = 300	σ = 350	σ = 400
N/mm²	f	–								
60	0,6	1,28	1,25	1,20	1,18	1,15	1,14	1,12	1,10	1,09
	0,8	1,39	1,30	1,24	1,23	1,22	1,20	1,18	1,15	1,12
	1	1,52	1,42	1,36	1,32	1,28	1,25	1,22	1,18	1,16
65	0,6	1,30	1,25	1,22	1,20	1,18	1,15	1,13	1,11	1,10
	0,8	1,44	1,35	1,30	1,28	1,24	1,22	1,20	1,16	1,14
	1	1,60	1,45	1,40	1,35	1,30	1,28	1,24	1,20	1,18
70	0,6	1,34	1,26	1,24	1,22	1,18	1,16	1,15	1,12	1,11
	0,8	1,48	1,38	1,34	1,30	1,25	1,23	1,20	1,18	1,15
	1	1,65	1,50	1,45	1,40	1,34	1,30	1,26	1,22	1,20
75	0,6	1,30	1,28	1,25	1,23	1,20	1,18	1,16	1,14	1,12
	0,8	1,52	1,42	1,36	1,32	1,28	1,25	1,22	1,18	1,16
	1	1,74	1,55	1,48	1,42	1,36	1,33	1,30	1,25	1,20
80	0,6	1,39	1,31	1,28	1,25	1,21	1,20	1,18	1,15	1,13
	0,8	1,58	1,45	1,39	1,35	1,30	1,27	1,24	1,20	1,18
	1	1,81	1,61	1,53	1,46	1,39	1,36	1,31	1,26	1,22
85	0,6	1,42	1,34	1,30	1,27	1,23	1,21	1,19	1,16	1,14
	0,8	1,53	1,49	1,42	1,38	1,32	1,29	1,26	1,22	1,19
	1	1,90	1,67	1,57	1,50	1,42	1,39	1,34	1,28	1,24
90	0,6	1,46	1,36	1,32	1,28	1,25	1,22	1,20	1,17	1,15
	0,8	1,69	1,53	1,46	1,40	1,34	1,31	1,28	1,23	1,20
	1	2,00	1,73	1,62	1,54	1,46	1,41	1,38	1,30	1,26
95	0,6	1,49	1,39	1,34	1,30	1,26	1,24	1,21	1,18	1,15
	0,8	1,75	1,57	1,49	1,43	1,37	1,34	1,30	1,25	1,21
	1	2,11	1,80	1,68	1,59	1,49	1,44	1,39	1,32	1,27
100	0,6	1,53	1,41	1,36	1,32	1,28	1,25	1,22	1,19	1,16
	0,8	1,81	1,61	1,53	1,46	1,39	1,36	1,31	1,26	1,22
	1	2,24	1,87	1,73	1,63	1,53	1,48	1,41	1,34	1,29
105	0,6	1,56	1,44	1,39	1,34	1,29	1,27	1,24	1,20	1,17
	0,8	1,88	1,66	1,56	1,50	1,42	1,38	1,33	1,28	1,24
	1	2,38	1,95	1,79	1,68	1,56	1,51	1,44	1,36	1,31
110	0,6	1,60	1,47	1,41	1,36	1,31	1,28	1,25	1,21	1,18
	0,8	1,96	1,71	1,60	1,53	1,44	1,37	1,35	1,29	1,25
	1	2,55	2,04	1,96	1,73	1,60	1,54	1,47	1,38	1,33
115	0,6	1,64	1,50	1,43	1,36	1,33	1,30	1,26	1,22	1,19
	0,8	2,04	1,76	1,64	1,56	1,47	1,43	1,37	1,31	1,26
	1	2,75	2,13	1,93	1,79	1,64	1,58	1,50	1,41	1,43
120	0,6	1,69	1,53	1,46	1,40	1,34	1,31	1,28	1,23	1,20
	0,8	2,13	1,81	1,69	1,60	1,50	1,45	1,39	1,33	1,29
	1	3,00	2,24	2,00	1,84	1,69	1,61	1,53	1,43	1,36
125	0,6	1,73	1,56	1,48	1,43	1,36	1,33	1,29	1,24	1,21
	0,8	2,24	1,87	1,73	1,63	1,53	1,48	1,41	1,34	1,29
	1	3,32	2,35	2,08	1,91	1,73	1,65	1,56	1,45	1,38
130	0,6	1,78	1,59	1,51	1,45	1,38	1,35	1,30	1,25	1,22
	0,8	2,35	1,93	1,78	1,67	1,56	1,50	1,44	1,36	1,30
	1	3,74	2,49	2,17	1,97	1,78	1,69	1,59	1,48	1,40
135	0,6	1,83	1,62	1,54	1,47	1,40	1,36	1,32	1,27	1,23
	0,8	2,48	2,00	1,83	1,71	1,59	1,53	1,46	1,38	1,32
	1	4,36	2,65	2,27	2,04	1,83	1,73	1,62	1,50	1,42
140	0,6	1,88	1,66	1,56	1,50	1,42	1,38	1,33	1,28	1,24
	0,8	2,63	2,07	1,88	1,75	1,62	1,55	1,48	1,39	1,33
	1	5,39	2,83	2,38	2,12	1,88	1,78	1,66	1,53	1,44
145	0,6	1,94	1,69	1,59	1,52	1,44	1,40	1,35	1,29	1,25
	0,8	2,80	2,15	1,94	1,80	1,65	1,58	1,50	1,41	1,35
	1	7,68	3,05	2,50	2,21	1,94	1,82	1,69	1,55	1,46
150	0,6	2,00	1,73	1,62	1,54	1,46	1,41	1,36	1,30	1,26
	0,8	3,00	2,24	2,00	1,84	1,69	1,61	1,53	1,43	1,36
	1	–	3,32	2,65	2,30	2,00	1,87	1,73	1,58	1,48
155	0,6	2,06	1,77	1,65	1,57	1,48	1,43	1,38	1,31	1,27
	0,8	3,25	2,33	2,06	1,89	1,72	1,65	1,55	1,45	1,38
	1	–	3,66	2,80	2,40	2,06	1,92	1,77	1,61	1,51
160	0,6	2,13	1,81	1,69	1,60	1,50	1,45	1,39	1,33	1,28
	0,8	3,55	2,43	2,13	1,94	1,76	1,67	1,58	1,47	1,39
	1	–	4,12	3,00	2,52	2,13	1,98	1,81	1,64	1,53
165	0,6	2,21	1,86	1,72	1,62	1,52	1,47	1,41	1,34	1,29
	0,8	3,96	2,55	2,21	2,00	1,80	1,71	1,60	1,49	1,41
	1	–	4,80	3,23	2,65	2,21	2,04	1,86	1,67	1,56
170	0,6	2,29	1,90	1,76	1,65	1,54	1,49	1,42	1,35	1,30
	0,8	4,52	2,68	2,29	2,06	1,84	1,74	1,63	1,51	1,42
	1	–	5,92	3,51	2,79	2,29	2,10	1,90	1,70	1,57

SKF FX Keyless Bushings models



FX 10
- *Medium torque*
- *Not self-centering*
- *Medium surface pressures*
- *No axial hub movement*
- *H11 – h11 tolerances*



FX 20
- *Medium torque*
- *Self-centering*
- *H8 – h8 tolerances*



FX 30
- *Low torque*
- *Medium surface pressures*
- *Taper rings only*



FX 40
- *High torque*
- *Self-centering*
- *Medium surface pressures*
- *H8 – h8 tolerances*



FX 41
- *Medium torque*
- *Reduced length*
- *Medium self-centering*
- *High surface pressures*
- *H8 – h8 tolerances*



FX 50
- *Medium torque*
- *Self-centering*
- *Low surface pressures*
- *No axial hub movement*
- *H8 – h8 tolerances*



FX 51
- *Medium torque*
- *Reduced length*
- *High surface pressures*
- *No axial hub movement*
- *H8 – h8 tolerances*



FX 52
- *High torque*
- *Self-centering*
- *Low-medium surface pressures*
- *H8 – h8 tolerances*



FX 60
- *Very high torque*
- *Self-centering*
- *Medium surface pressures*
- *No axial hub movement*
- *H8 – h8 tolerances*



FX 80
- *Low torque*
- *Short length*
- *Not self-centering*
- *Low surface pressures*
- *H8 – h8 tolerances*



FX 90
- *Low–medium torque*
- *Short length*
- *Self -centering*
- *Low surface pressures*
- *H8 – h8 tolerances*



FX 120
- *Medium torque*
- *Reduced length*
- *Medium self-centering*
- *High surface pressures*
- *Reduced length*
- *H8 – h8 tolerances*



FX 130
- *Low-medium torque*
- *h8 tolerances*



FX 140
- *Medium torque*
- *Reduced length*
- *High surface pressures*
- *H8 – h8 tolerances*

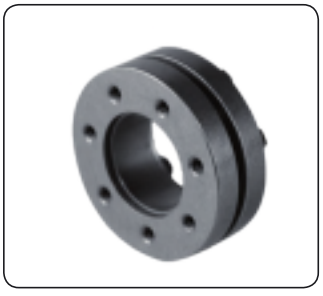

FX 190
- *High torque*
- *No axial hub movement*
- *h8 tolerances*



FX 350
- *Low-medium torque*
- *Short length*
- *Self-centering*
- *Low surface pressures*
- *H8 – h8 tolerances*



FX 400
- *High torque*
- *Self-centering*
- *Low surface pressures*
- *No axial hub movement*
- *H8 – h8 tolerances*

FX10
d **20 – 900** mm

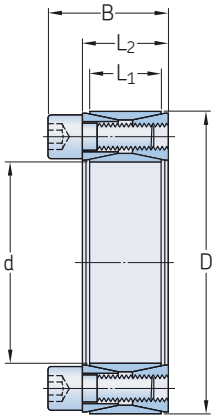

Dimensions					Performance		Pressure		Clamp screws			Weight	Designation
d	D	L_1	L_2	B	Transmissible axial force F_t	Transmissible torque M_t	Shaft surface P_w	Hub surface P_n	Qty	Size	Tightening torque M_s		
mm					kN	Nm	N/mm²	N/mm²	–	–	Nm	kg	–
20	47	17	20	27,5	27	240	210	90	8	M6	15	0,2	**PHF FX10-20X47**
22	47	17	20	27,5	27	300	195	90	8	M6	15	0,2	**PHF FX10-22X47**
24	50	17	20	27,5	30	360	195	95	8	M6	15	0,3	**PHF FX10-24X50**
25	50	17	20	27,5	30	380	190	95	8	M6	15	0,3	**PHF FX10-25X50**
28	55	17	20	27,5	33	470	185	95	10	M6	15	0,3	**PHF FX10-28X55**
30	55	17	20	27,5	33	500	175	95	10	M6	15	0,3	**PHF FX10-30X55**
32	60	17	20	27,5	40	630	192	105	12	M6	15	0,3	**PHF FX10-32X60**
35	60	17	20	27,5	40	700	180	105	12	M6	15	0,3	**PHF FX10-35X60**
38	65	17	20	27,5	46	870	188	110	14	M6	15	0,4	**PHF FX10-38X65**
40	65	17	20	27,5	46	920	180	110	14	M6	15	0,3	**PHF FX10-40X65**
42	75	20	24	33,5	72	1 500	226	125	12	M8	37	0,6	**PHF FX10-42X75**
45	75	20	24	33,5	72	1 610	210	125	12	M8	37	0,6	**PHF FX10-45X75**
48	80	20	24	33,5	71	1 700	196	115	12	M8	37	0,6	**PHF FX10-48X80**
50	80	20	24	33,5	71	1 770	190	115	12	M8	37	0,6	**PHF FX10-50X80**
55	85	20	24	33,5	83	2 270	200	130	14	M8	37	0,6	**PHF FX10-55X85**
60	90	20	24	33,5	83	2 470	180	120	14	M8	37	0,7	**PHF FX10-60X90**
65	95	20	24	33,5	93	3 040	190	130	16	M8	37	0,7	**PHF FX10-65X95**
70	110	24	28	39,5	132	4 600	210	130	14	M10	70	1,3	**PHF FX10-70X110**
75	115	24	28	39,5	131	4 900	195	125	14	M10	70	1,3	**PHF FX10-75X115**
80	120	24	28	39,5	131	5 200	180	120	14	M10	70	1,4	**PHF FX10-80X120**
85	125	24	28	39,5	148	6 300	195	130	16	M10	70	1,4	**PHF FX10-85X125**
90	130	24	28	39,5	147	6 600	180	125	16	M10	70	1,5	**PHF FX10-90X130**
95	135	24	28	39,5	167	7 900	195	135	18	M10	70	1,6	**PHF FX10-95X135**
100	145	26	33	47	192	9 600	195	135	14	M12	127	2,2	**PHF FX10-100X145**
110	155	26	33	47	191	10 500	180	125	14	M12	127	2,5	**PHF FX10-110X155**
120	165	26	33	47	218	13 100	185	135	16	M12	127	2,6	**PHF FX10-120X165**
130	180	34	38	52	272	17 600	165	115	20	M12	127	3,8	**PHF FX10-130X180**
140	190	34	38	52	298	20 900	165	125	22	M12	127	3,9	**PHF FX10-140X190**
150	200	34	38	52	324	24 200	170	125	24	M12	127	4,0	**PHF FX10-150X200**
160	210	34	38	52	350	28 000	170	130	26	M12	127	4,3	**PHF FX10-160X210**
170	225	38	44	60	386	32 800	160	120	22	M14	195	5,8	**PHF FX10-170X225**
180	235	38	44	60	420	37 800	165	125	24	M14	195	6,0	**PHF FX10-180X235**
190	250	46	52	68	490	46 500	150	115	28	M14	195	8,5	**PHF FX10-190X250**
200	260	46	52	68	525	52 500	150	115	30	M14	195	8,6	**PHF FX10-200X260**
220	285	50	56	74	620	68 000	150	115	26	M16	300	11,0	**PHF FX10-220X285**
240	305	50	56	74	715	85 500	160	125	30	M16	300	12,0	**PHF FX10-240X305**
260	325	50	56	74	800	104 000	165	130	34	M16	300	13,0	**PHF FX10-260X325**
280	355	60	66	86,5	915	128 000	145	115	32	M18	410	19,0	**PHF FX10-280X355**
300	375	60	66	86,5	1 020	153 000	150	120	36	M18	410	20,0	**PHF FX10-300X375**
320	405	72	78	100,5	1 310	210 000	150	120	36	M20	590	30,0	**PHF FX10-320X405**

Dimensions					Performance		Pressure		Clamp screws			Weight	Designation
d	D	L_1	L_2	B	Transmissible axial force F_t	Transmissible torque M_t	Shaft surface P_w	Hub surface P_n	Qty	Size	Tightening torque M_s		
mm					kN	Nm	N/mm²	N/mm²	–	–	Nm	kg	–
340	425	72	78	100,5	1 310	224 000	145	115	36	M20	590	30,1	**PHF FX10-340X425**
360	455	84	90	116	1 630	294 000	145	115	36	M22	790	42,0	**PHF FX10-360X455**
380	475	84	90	116	1 620	308 000	135	110	36	M22	790	44,0	**PHF FX10-380X475**
400	495	84	90	116	1 610	322 000	130	105	36	M22	790	46,0	**PHF FX10-400X495**
420	515	84	90	116	1 780	370 000	135	110	40	M22	790	50,0	**PHF FX10-420X515**
440	545	96	102	130	2 050	450 000	130	105	40	M24	1 000	65,0	**PHF FX10-440X545**
460	565	96	102	130	2 030	465 000	125	100	40	M24	1 000	67,0	**PHF FX10-460X565**
480	585	96	102	130	2 150	505 000	125	100	42	M24	1 000	71,0	**PHF FX10-480X585**
500	605	96	102	130	2 200	553 000	125	100	44	M24	1 000	73,0	**PHF FX10-500X605**
520	630	96	102	130	2 300	592 000	125	100	45	M24	1 000	80,0	**PHF FX10-520X630**
540	650	96	102	130	2 320	618 000	120	100	45	M24	1 000	82,0	**PHF FX10-540X650**
560	670	96	102	130	2 430	670 000	120	100	48	M24	1 000	85,0	**PHF FX10-560X670**
580	690	96	102	130	2 520	727 000	120	100	50	M24	1 000	88,0	**PHF FX10-580X690**
600	710	96	102	130	2 565	770 000	120	100	50	M24	1 000	91,0	**PHF FX10-600X710**
620	730	96	102	130	2 647	818 000	120	100	52	M24	1 000	93,0	**PHF FX10-620X730**
640	750	96	102	130	2 698	860 000	115	100	54	M24	1 000	96,0	**PHF FX10-640X750**
660	770	96	102	130	2 790	919 000	120	100	56	M24	1 000	99,0	**PHF FX10-660X770**
680	790	96	102	130	2 820	955 000	115	100	56	M24	1 000	102,0	**PHF FX10-680X790**
700	810	96	102	130	2 945	1 018 000	115	100	60	M24	1 000	104,0	**PHF FX10-700X810**
720	830	96	102	130	2 965	1 060 000	115	100	60	M24	1 000	107,0	**PHF FX10-720X830**
740	850	96	102	130	3 065	1 128 000	115	100	62	M24	1 000	110,0	**PHF FX10-740X850**
760	870	96	102	130	3 170	1 200 000	115	100	64	M24	1 000	113,0	**PHF FX10-760X870**
780	890	96	102	130	3 205	1 235 000	115	100	65	M24	1 000	116,0	**PHF FX10-780X890**
800	910	96	102	130	3 260	1 287 000	115	100	66	M24	1 000	118,0	**PHF FX10-800X910**
820	930	96	102	130	3 330	1 360 000	115	100	68	M24	1 000	121,0	**PHF FX10-820X930**
840	950	96	102	130	3 445	1 435 000	115	100	70	M24	1 000	124,0	**PHF FX10-840X950**
860	970	96	102	130	3 525	1 510 000	115	100	72	M24	1 000	127,0	**PHF FX10-860X970**
880	990	96	102	130	3 610	1 578 000	115	100	74	M24	1 000	129,0	**PHF FX10-880X990**
900	1 010	96	102	130	3 660	1 635 000	115	100	75	M24	1 000	132,0	**PHF FX10-900X1010**

FX20

d **6 – 130** mm

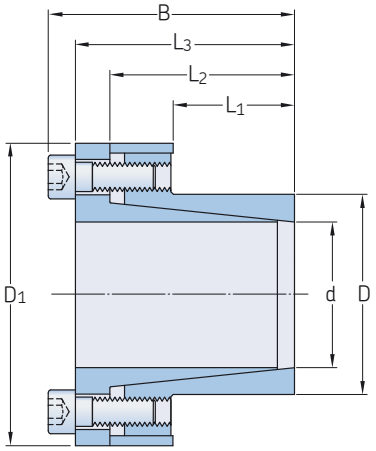

Dimensions							Performance		Pressure		Clamp screws			Weight	Designation
d	D	L_1	L_2	L_3	B	D_1	Transmissible axial force F_t	Transmissible torque M_t	Shaft surface P_w	Hub surface P_n	Qty	Size	Tightening torque M_s		
mm							kN	Nm	N/mm²	N/mm²	–	–	Nm	kg	–
6	14	10	18,5	21	24	25	4,5	13	190	80	3	M3	2	0,04	**PHF FX20-6X14**
7	15	12	22	25	29	27	6,5	24	230	110	3	M4	4,9	0,06	**PHF FX20-7X15**
8	15	12	22	25	29	27	6,65	25	210	110	3	M4	4,9	0,05	**PHF FX20-8X15**
9	16	14	23	26	30	28	9,98	45	210	120	4	M4	4,9	0,06	**PHF FX20-9X16**
10	16	14	23	26	30	28	9,98	49	180	120	4	M4	4,9	0,06	**PHF FX20-10X16**
11	18	14	23	26	30	32	9,98	54	170	105	4	M4	4,9	0,07	**PHF FX20-11X18**
12	18	14	23	26	30	32	9,98	60	155	105	4	M4	4,9	0,07	**PHF FX20-12X18**
13	23	14	23	26	30	38	9,98	63	145	85	4	M4	4,9	0,11	**PHF FX20-13X23**
14	23	14	23	26	30	38	9,98	70	135	85	4	M4	4,9	0,10	**PHF FX20-14X23**
15	24	16	29	36	42	45	17,1	120	185	120	3	M6	17	0,22	**PHF FX20-15X24**
16	24	16	29	36	42	45	17,1	140	180	120	3	M6	17	0,22	**PHF FX20-16X24**
17	26	18	31	38	44	47	22	180	190	125	4	M6	17	0,25	**PHF FX20-17X26**
18	26	18	31	38	44	47	22	200	180	125	4	M6	17	0,24	**PHF FX20-18X26**
19	27	18	31	38	44	49	22	210	170	120	4	M6	17	0,26	**PHF FX20-19X27**
20	28	18	31	38	44	50	22	220	160	115	4	M6	17	0,27	**PHF FX20-20X28**
22	32	25	38	45	51	54	22	250	115	80	4	M6	17	0,34	**PHF FX20-22X32**
24	34	25	38	45	51	56	22	270	105	75	4	M6	17	0,36	**PHF FX20-24X34**
25	34	25	38	45	51	56	22	290	100	75	4	M6	17	0,35	**PHF FX20-25X34**
28	39	25	38	45	51	61	33	465	135	100	6	M6	17	0,48	**PHF FX20-28X39**
30	41	25	38	45	51	62	33	510	125	90	6	M6	17	0,48	**PHF FX20-30X41**
32	43	25	38	45	51	65	33	540	120	90	6	M6	17	0,47	**PHF FX20-32X43**
35	47	32	45	52	58	69	45	790	105	80	8	M6	17	0,58	**PHF FX20-35X47**
39	50	32	45	52	58	72	45	860	100	75	8	M6	17	0,61	**PHF FX20-39X50**
40	53	32	45	52	58	75	45	900	95	70	8	M6	17	0,68	**PHF FX20-40X53**
42	55	32	45	52	58	78	45	950	90	70	8	M6	17	0,76	**PHF FX20-42X55**
45	59	45	62	70	78	86	84	1 890	110	85	8	M8	41	1,2	**PHF FX20-45X59**
48	62	45	62	70	78	87	84	2 010	105	80	8	M8	41	1,2	**PHF FX20-48X62**
50	65	45	62	70	78	92	84	2 100	100	75	8	M8	41	1,4	**PHF FX20-50X65**
55	71	55	72	80	88	98	94	2 600	85	65	9	M8	41	1,6	**PHF FX20-55X71**
60	77	55	72	80	88	104	94	2 840	75	60	9	M8	41	1,8	**PHF FX20-60X77**
65	84	55	72	80	88	111	94	3 070	70	55	9	M8	41	2,1	**PHF FX20-65X84**
70	90	65	86	96	106	119	150	5 250	90	70	9	M10	83	3,0	**PHF FX20-70X90**
75	95	65	86	96	106	126	150	5 600	80	65	9	M10	83	3,0	**PHF FX20-75X95**
80	100	65	86	96	106	131	200	8 020	100	80	12	M10	83	3,5	**PHF FX20-80X100**
85	106	65	86	96	106	137	200	8 500	95	75	12	M10	83	3,6	**PHF FX20-85X106**
90	112	65	86	96	106	144	200	9 000	90	75	12	M10	83	3,9	**PHF FX20-90X112**
95	120	65	86	96	106	149	230	11 000	100	80	14	M10	83	4,4	**PHF FX20-95X120**
100	125	65	86	96	106	154	300	15 000	120	95	18	M10	83	4,6	**PHF FX20-100X125**
110	140	90	114	128	140	180	290	16 000	80	65	12	M12	145	8,7	**PHF FX20-110X140**
120	155	90	114	128	140	198	290	17 500	70	55	12	M12	145	10,6	**PHF FX20-120X155**
130	165	90	114	128	140	208	384	25 000	90	70	16	M12	145	11,3	**PHF FX20-130X165**

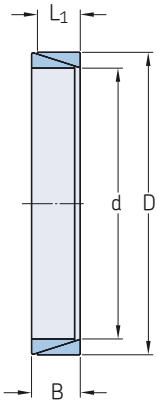

Dimensions				**Performance**		**Pressure**		**Weight**	**Designation**
d	D	L_1	B	Transmissible axial force F_t	Transmissible torque M_t	Shaft surface P_w	Hub surface P_n		
mm				kN	Nm	N/mm²	N/mm²	kg	–
6	9	3,7	4,5	0,84	2,5	115	75	0,002	**PHF FX30-6X9**
7	10	3,7	4,5	0,86	3	105	70	0,002	**PHF FX30-7X10**
8	11	3,7	4,5	1,17	4,7	120	90	0,002	**PHF FX30-8X11**
9	12	3,7	4,5	1,76	7,9	140	105	0,002	**PHF FX30-9X12**
10	13	3,7	4,5	1,91	9,5	135	105	0,002	**PHF FX30-10X13**
12	15	3,7	4,5	1,91	11,4	115	90	0,002	**PHF FX30-12X15**
13	16	3,7	4,5	2,02	13,1	110	90	0,002	**PHF FX30-13X16**
14	18	5,3	6,3	3,18	22,3	115	90	0,005	**PHF FX30-14X18**
15	19	5,3	6,3	3,24	24,3	110	85	0,005	**PHF FX30-15X19**
16	20	5,3	6,3	3,42	27,3	105	85	0,006	**PHF FX30-16X20**
17	21	5,3	6,3	3,51	29,8	105	85	0,006	**PHF FX30-17X21**
18	22	5,3	6,3	3,61	32,4	100	80	0,007	**PHF FX30-18X22**
19	24	5,3	6,3	5,22	49	140	110	0,007	**PHF FX30-19X24**
20	25	5,3	6,3	5,33	53	135	105	0,009	**PHF FX30-20X25**
22	26	5,3	6,3	6	66	135	115	0,007	**PHF FX30-22X26**
24	28	5,3	6,3	6,13	73	130	110	0,008	**PHF FX30-24X28**
25	30	5,3	6,3	5,77	72	115	95	0,009	**PHF FX30-25X30**
28	32	5,3	6,3	6,33	86	115	100	0,01	**PHF FX30-28X32**
30	35	5,3	6,3	6,08	91	100	85	0,011	**PHF FX30-30X35**
32	36	5,3	6,3	8,24	131	130	115	0,011	**PHF FX30-32X36**
35	40	6,0	7,0	9,77	171	125	110	0,016	**PHF FX30-35X40**
36	42	6,0	7,0	9,39	169	115	100	0,021	**PHF FX30-36X42**
38	44	6,0	7,0	9,55	181	110	95	0,021	**PHF FX30-38X44**
40	45	6,6	8,0	11,57	231	115	105	0,021	**PHF FX30-40X45**
42	48	6,6	8,0	11,22	235	110	95	0,026	**PHF FX30-42X48**
45	52	8,6	10,0	15,71	353	105	95	0,045	**PHF FX30-45X52**
48	55	8,6	10,0	23,84	572	155	135	0,043	**PHF FX30-48X55**
50	57	8,6	10,0	24,08	602	150	130	0,045	**PHF FX30-50X57**
55	62	8,6	10,0	24,35	670	140	125	0,049	**PHF FX30-55X62**
56	64	10,4	12,0	28,2	790	130	115	0,07	**PHF FX30-56X64**
60	68	10,4	12,0	28,6	860	125	110	0,07	**PHF FX30-60X68**
63	71	10,4	12,0	28,8	910	120	105	0,08	**PHF FX30-63X71**
65	73	10,4	12,0	29,2	950	115	100	0,09	**PHF FX30-65X73**
70	79	12,2	14,0	39,4	1 380	125	110	0,115	**PHF FX30-70X79**
71	80	12,2	14,0	39,4	1 400	120	110	0,11	**PHF FX30-71X80**
75	84	12,2	14,0	38,6	1 450	115	100	0,12	**PHF FX30-75X84**
80	91	15,0	17,0	55	2 200	125	105	0,21	**PHF FX30-80X91**
85	96	15,0	17,0	56,4	2 400	120	105	0,21	**PHF FX30-85X96**
90	101	15,0	17,0	60,5	2 730	120	105	0,22	**PHF FX30-90X101**
95	106	15,0	17,0	64,2	3 050	120	110	0,23	**PHF FX30-95X106**

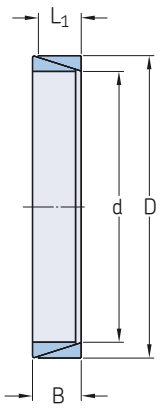

Dimensions				**Performance**		**Pressure**		**Weight**	**Designation**
d	D	L_1	B	Transmissible axial force F_t	Transmissible torque M_t	Shaft surface P_w	Hub surface P_n		
mm				kN	Nm	N/mm²	N/mm²	kg	–
100	114	18,7	21	84	4 200	120	105	0,39	**PHF FX30-100X114**
110	124	18,7	21	93,6	5 150	120	105	0,42	**PHF FX30-110X124**
120	134	18,7	21	100,8	6 050	120	105	0,46	**PHF FX30-120X134**
130	148	25,3	28	147,6	9 600	120	105	0,86	**PHF FX30-130X148**
140	158	25,3	28	158,5	11 000	120	105	0,96	**PHF FX30-140X158**
150	168	25,3	28	172	12 900	120	105	1	**PHF FX30-150X168**
160	178	25,3	28	182,5	14 600	120	110	1	**PHF FX30-160X178**
170	191	30	33	229	19 500	120	105	1,54	**PHF FX30-170X191**
180	201	30	33	236	21 300	120	105	1,5	**PHF FX30-180X201**
190	211	30	33	255	24 200	120	110	1,8	**PHF FX30-190X211**
200	224	34,8	38	310	31 000	120	105	2,4	**PHF FX30-200X224**
210	234	34,8	38	333	35 000	120	110	2,5	**PHF FX30-210X234**
220	244	34,8	38	345	38 000	120	110	2,6	**PHF FX30-220X244**
230	257	39,5	43	408	47 000	120	105	3,4	**PHF FX30-230X257**
240	267	39,5	43	425	51 000	120	110	3,8	**PHF FX30-240X267**
250	280	44	48	415	52 000	100	90	4,8	**PHF FX30-250X280**
260	290	44	48	435	56 500	100	90	4,9	**PHF FX30-260X290**
270	300	44	48	450	61 000	100	90	5	**PHF FX30-270X300**
280	313	49	53	520	72 500	100	90	6,4	**PHF FX30-280X313**
290	323	49	53	535	77 500	100	90	6,5	**PHF FX30-290X323**
300	333	49	53	555	83 000	100	90	6,8	**PHF FX30-300X333**
320	360	59	65	710	114 000	100	90	11	**PHF FX30-320X360**
340	380	59	65	755	128 500	100	90	11,5	**PHF FX30-340X380**
360	400	59	65	800	144 000	100	90	12,3	**PHF FX30-360X400**
380	420	59	65	845	160 500	100	90	13	**PHF FX30-380X420**
400	440	59	65	890	178 000	100	90	13,7	**PHF FX30-400X440**
420	460	59	65	935	196 000	100	90	14,1	**PHF FX30-420X460**
440	480	59	65	980	215 000	100	90	14,8	**PHF FX30-440X480**
460	500	59	65	1 020	235 000	100	90	15,5	**PHF FX30-460X500**
480	520	59	65	1 070	256 000	100	90	16	**PHF FX30-480X520**
500	540	59	65	1 110	278 000	100	90	16,7	**PHF FX30-500X540**
520	570	73	80	1 430	372 000	100	90	27	**PHF FX30-520X570**
540	590	73	80	1 480	400 000	100	90	28	**PHF FX30-540X590**

FX40

d **20 – 140** mm

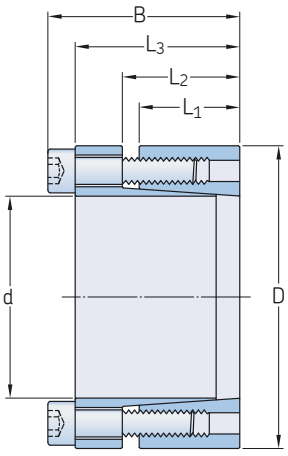

Dimensions						Performance		Pressure		Clamp screws			Weight	Designation
d	D	L_1	L_2	L_3	B	Transmissible axial force F_t	Transmissible torque M_t	Shaft surface P_w	Hub surface P_n	Qty	Size	Tightening torque M_s		
mm						kN	Nm	N/mm²	N/mm²	–	–	Nm	kg	–
20	47	26	29	42	48	54	540	250	105	6	M6	17	0,4	**PHF FX40-20X47**
22	47	26	29	42	48	54	600	230	105	6	M6	17	0,4	**PHF FX40-22X47**
24	50	26	29	42	48	54	650	210	100	6	M6	17	0,4	**PHF FX40-24X50**
25	50	26	29	42	48	54	680	200	100	6	M6	17	0,4	**PHF FX40-25X50**
28	55	26	29	42	48	54	760	180	95	6	M6	17	0,5	**PHF FX40-28X55**
30	55	26	29	42	48	54	820	170	95	6	M6	17	0,5	**PHF FX40-30X55**
32	60	26	29	42	48	82	1 310	235	125	9	M6	17	0,6	**PHF FX40-32X60**
35	60	26	29	42	48	82	1 440	215	125	9	M6	17	0,5	**PHF FX40-35X60**
38	65	26	29	42	48	82	1 560	200	115	9	M6	17	0,6	**PHF FX40-38X65**
40	65	26	29	42	48	82	1 640	190	115	9	M6	17	0,6	**PHF FX40-40X65**
42	75	30	34,4	51	59	101	2 130	215	120	6	M8	41	1	**PHF FX40-42X75**
45	75	30	34,4	51	59	101	2 280	200	120	6	M8	41	1	**PHF FX40-45X75**
48	80	30	34,4	51	59	101	2 430	190	115	6	M8	41	1,1	**PHF FX40-48X80**
50	80	30	34,4	51	59	101	2 530	180	115	6	M8	41	1	**PHF FX40-50X80**
55	85	30	34,4	51	59	152	4 180	245	160	9	M8	41	1,1	**PHF FX40-55X85**
60	90	30	34,4	51	59	152	4 560	225	150	9	M8	41	1,2	**PHF FX40-60X90**
65	95	30	34,4	51	59	152	4 940	210	145	9	M8	41	1,3	**PHF FX40-65X95**
70	110	40	45	56	66	186	6 500	175	110	7	M10	83	2,2	**PHF FX40-70X110**
75	115	40	45	56	66	186	9 000	165	110	7	M10	83	2,5	**PHF FX40-75X115**
80	120	40	45	56	66	186	7 400	155	100	7	M10	83	2,6	**PHF FX40-80X120**
85	125	40	45	56	66	213	9 000	170	115	8	M10	83	2,8	**PHF FX40-85X125**
90	130	40	45	56	66	213	9 600	160	110	8	M10	83	2,7	**PHF FX40-90X130**
95	135	40	45	56	66	267	12 600	185	130	10	M10	83	2,9	**PHF FX40-95X135**
100	145	46	52	65	77	270	13 300	160	105	7	M12	145	3,9	**PHF FX40-100X145**
110	155	46	52	65	77	270	14 700	140	100	7	M12	145	4,2	**PHF FX40-110X155**
120	165	46	52	65	77	309	18 400	150	110	8	M12	145	4,8	**PHF FX40-120X165**
130	180	46	52	65	77	388	25 100	175	125	10	M12	145	5	**PHF FX40-130X180**
140	190	51	58,5	73,5	87,5	586	40 150	220	160	11	M14	230	6,5	**PHF FX40-140X190**

FX41

d **20 – 200** mm

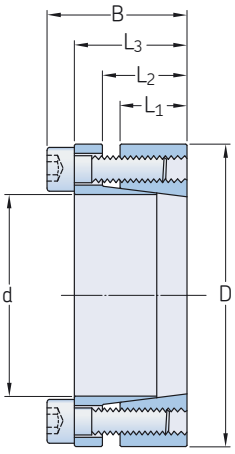

Dimensions						Performance		Pressure		Clamp screws			Weight	Designation
d	D	L_1	L_2	L_3	B	Transmissible axial force F_t	Transmissible torque M_t	Shaft surface P_w	Hub surface P_n	Qty	Size	Tightening torque M_s		
mm						kN	Nm	N/mm²	N/mm²	–	–	Nm	kg	–
20	47	17	22	28	34	38	380	295	125	5	M6	14	0,3	**PHF FX41-20X47**
22	47	17	22	28	34	38	410	270	125	5	M6	14	0,3	**PHF FX41-22X47**
24	50	17	22	28	34	38	450	245	120	5	M6	14	0,3	**PHF FX41-24X50**
25	50	17	22	28	34	45,6	570	285	140	6	M6	14	0,3	**PHF FX41-25X50**
28	55	17	22	28	34	45,6	630	255	130	6	M6	14	0,4	**PHF FX41-28X55**
30	55	17	22	28	34	45,6	660	235	130	6	M6	14	0,4	**PHF FX41-30X55**
32	60	17	22	28	34	60,5	970	295	155	8	M6	14	0,4	**PHF FX41-32X60**
35	60	17	22	28	34	60,5	1 060	270	155	8	M6	14	0,4	**PHF FX41-35X60**
38	65	17	22	28	34	60,5	1 150	250	145	8	M6	14	0,5	**PHF FX41-38X65**
40	65	17	22	28	34	60,5	1 210	235	145	8	M6	14	0,5	**PHF FX41-40X65**
42	75	20	25	33	41	98	2 050	300	170	7	M8	35	0,8	**PHF FX41-42X75**
45	75	20	25	33	41	98	2 200	290	170	7	M8	35	0,7	**PHF FX41-45X75**
48	80	20	25	33	41	98	2 350	270	160	7	M8	35	0,8	**PHF FX41-48X80**
50	80	20	25	33	41	98	2 450	260	160	7	M8	35	0,8	**PHF FX41-50X80**
55	85	20	25	33	41	112	3 080	270	175	8	M8	35	0,9	**PHF FX41-55X85**
60	90	20	25	33	41	112	3 360	245	165	8	M8	35	0,9	**PHF FX41-60X90**
65	95	20	25	33	41	126	4 090	255	175	9	M8	35	1	**PHF FX41-65X95**
70	110	24	30	40	50	179	6 300	280	180	8	M10	70	1,9	**PHF FX41-70X110**
75	115	24	30	40	50	179	6 700	260	170	8	M10	70	2	**PHF FX41-75X115**
80	120	24	30	40	50	179	7 150	250	170	8	M10	70	2	**PHF FX41-80X120**
85	125	24	30	40	50	200	8 500	260	180	9	M10	70	2	**PHF FX41-85X125**
90	130	24	30	40	50	200	9 100	250	170	9	M10	70	2,2	**PHF FX41-90X130**
95	135	24	30	40	50	224	10 600	260	180	10	M10	70	2,3	**PHF FX41-95X135**
100	145	26	32	44	56	268	13 400	270	190	8	M12	125	3	**PHF FX41-100X145**
110	155	26	32	44	56	268	14 600	240	180	8	M12	125	3,2	**PHF FX41-110X155**
120	165	26	32	44	56	298	17 900	250	180	9	M12	125	3,4	**PHF FX41-120X165**
130	180	34	40	54	64	400	26 000	240	170	12	M12	125	5,2	**PHF FX41-130X180**
140	190	34	40	54	68	384	27 000	210	150	9	M14	190	5,4	**PHF FX41-140X190**
150	200	34	40	54	68	440	33 000	230	170	10	M14	190	5,7	**PHF FX41-150X200**
160	210	34	40	54	68	479	38 000	230	170	11	M14	190	6	**PHF FX41-160X210**
170	225	44	50	64	78	530	45 000	180	130	12	M14	190	8,3	**PHF FX41-170X225**
180	235	44	50	64	78	530	47 000	170	130	12	M14	190	8,8	**PHF FX41-180X235**
190	250	44	50	64	78	660	62 900	210	150	15	M14	190	10	**PHF FX41-190X250**
200	260	44	50	64	78	660	66	190	150	15	M14	190	10,5	**PHF FX41-200X260**

FX50

d **20 – 140** mm

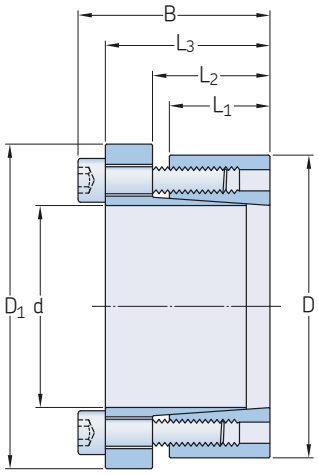

Dimensions							Performance		Pressure		Clamp screws			Weight	Designation
d	D	L_1	L_2	L_3	B	D_1	Transmissible axial force F_t	Transmissible torque M_t	Shaft surface P_w	Hub surface P_n	Qty	Size	Tightening torque M_s		
mm							kN	Nm	N/mm²	N/mm²	–	–	Nm	kg	–
20	47	26	29	42	48	53	33,6	330	155	65	6	M6	17	0,5	**PHF FX50-20X47**
22	47	26	29	42	48	53	33,6	370	145	65	6	M6	17	0,5	**PHF FX50-22X47**
24	50	26	29	42	48	56	33,6	400	140	60	6	M6	17	0,5	**PHF FX50-24X50**
25	50	26	29	42	48	56	33,6	420	125	60	6	M6	17	0,5	**PHF FX50-25X50**
28	55	26	29	42	48	61	33,6	470	110	60	6	M6	17	0,6	**PHF FX50-28X55**
30	55	26	29	42	48	61	33,6	510	105	60	6	M6	17	0,6	**PHF FX50-30X55**
32	60	26	29	42	48	66	51	810	145	80	9	M6	17	0,7	**PHF FX50-32X60**
35	60	26	29	42	48	66	51	890	135	80	9	M6	17	0,6	**PHF FX50-35X60**
38	65	26	29	42	48	71	51	970	125	70	9	M6	17	0,8	**PHF FX50-38X65**
40	65	26	29	42	48	71	51	1 020	120	70	9	M6	17	0,6	**PHF FX50-40X65**
42	75	30	34,4	51	59	81	62,8	1 320	135	75	6	M8	41	1,2	**PHF FX50-42X75**
45	75	30	34,4	51	59	81	62,8	1 410	125	75	6	M8	41	1,1	**PHF FX50-45X75**
48	80	30	34,4	51	59	86	62,8	1 510	120	70	6	M8	41	1,3	**PHF FX50-48X80**
50	80	30	34,4	51	59	86	62,8	1 570	110	70	6	M8	41	1,1	**PHF FX50-50X80**
55	85	30	34,4	51	59	91	94,6	2 600	150	100	9	M8	41	1,2	**PHF FX50-55X85**
60	90	30	34,4	51	59	96	94,6	2 830	140	95	9	M8	41	1,3	**PHF FX50-60X90**
65	95	30	34,4	51	59	102	94,6	3 070	130	90	9	M8	41	1,4	**PHF FX50-65X95**
70	110	40	45	56	66	117	116	4 000	110	70	7	M10	83	2,5	**PHF FX50-70X110**
75	115	40	45	56	66	122	116	4 300	100	65	7	M10	83	2,6	**PHF FX50-75X115**
80	120	40	45	56	66	127	116	4 600	100	65	7	M10	83	2,8	**PHF FX50-80X120**
85	125	40	45	56	66	132	133	5 600	105	70	8	M10	83	2,8	**PHF FX50-85X125**
90	130	40	45	56	66	137	133	6 000	100	70	8	M10	83	3	**PHF FX50-90X130**
95	135	40	45	56	66	142	166,8	7 900	115	80	10	M10	83	3	**PHF FX50-95X135**
100	145	46	52	65	77	153	169	8 470	100	65	7	M12	145	5,5	**PHF FX50-100X145**
110	155	46	52	65	77	163	169	9 200	90	65	7	M12	145	4,8	**PHF FX50-110X155**
120	165	46	52	65	77	173	193	11 600	90	70	8	M12	145	5,5	**PHF FX50-120X165**
130	180	46	52	65	77	188	242	15 700	110	80	10	M12	145	6	**PHF FX50-130X180**
140	190	51	58,5	73,5	87,5	199	366	25 300	135	100	11	M14	230	7,5	**PHF FX50-140X190**

FX51

d **20 – 200** mm

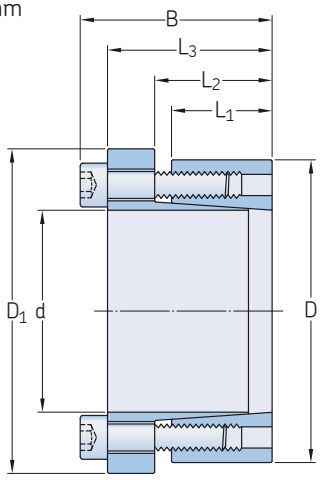

Dimensions							Performance		Pressure		Clamp screws			Weight	Designation
d	D	L_1	L_2	L_3	B	D_1	Transmissible axial force F_t	Transmissible torque M_t	Shaft surface P_w	Hub surface P_n	Qty	Size	Tightening torque M_s		
mm							kN	Nm	N/mm²	N/mm²	–	–	Nm	kg	–
20	47	17	22	28	34	56	28	280	220	95	5	M6	17	0,3	**PHF FX51-20X47**
22	47	17	22	28	34	56	28	300	200	95	5	M6	17	0,3	**PHF FX51-22X47**
24	50	17	22	28	34	59	28	330	180	90	5	M6	17	0,3	**PHF FX51-24X50**
25	50	17	22	28	34	59	34	420	210	105	6	M6	17	0,3	**PHF FX51-25X50**
28	55	17	22	28	34	64	34	470	190	95	6	M6	17	0,4	**PHF FX51-28X55**
30	55	17	22	28	34	64	34	500	175	95	6	M6	17	0,4	**PHF FX51-30X55**
32	60	17	22	28	34	69	45	720	220	115	8	M6	17	0,4	**PHF FX51-32X60**
35	60	17	22	28	34	69	45	790	200	115	8	M6	17	0,4	**PHF FX51-35X60**
38	65	17	22	28	34	74	45	850	185	105	8	M6	17	0,5	**PHF FX51-38X65**
40	65	17	22	28	34	74	45	900	175	105	8	M6	17	0,5	**PHF FX51-40X65**
42	75	20	25	33	41	84	73	1 530	225	125	7	M8	41	0,8	**PHF FX51-42X75**
45	75	20	25	33	41	84	73	1 650	215	125	7	M8	41	0,7	**PHF FX51-45X75**
48	80	20	25	33	41	89	73	1 760	200	120	7	M8	41	0,8	**PHF FX51-48X80**
50	80	20	25	33	41	89	73	1 830	195	120	7	M8	41	0,8	**PHF FX51-50X80**
55	85	20	25	33	41	94	83,5	2 300	200	130	8	M8	41	0,9	**PHF FX51-55X85**
60	90	20	25	33	41	99	83,5	2 510	185	125	8	M8	41	0,9	**PHF FX51-60X90**
65	95	20	25	33	41	104	94	3 060	190	130	9	M8	41	1	**PHF FX51-65X95**
70	110	24	30	40	50	119	133	4 670	210	135	8	M10	83	1,9	**PHF FX51-70X110**
75	115	24	30	40	50	124	133	5 000	195	125	8	M10	83	2	**PHF FX51-75X115**
80	120	24	30	40	50	129	133	5 300	185	125	8	M10	83	2	**PHF FX51-80X120**
85	125	24	30	40	50	134	148	6 300	195	135	9	M10	83	2	**PHF FX51-85X125**
90	130	24	30	40	50	139	148	6 750	185	130	9	M10	83	2,2	**PHF FX51-90X130**
95	135	24	30	40	50	144	166	7 900	195	135	10	M10	83	2,3	**PHF FX51-95X135**
100	145	26	32	44	56	154	194	9 700	200	140	8	M12	145	3	**PHF FX51-100X145**
110	155	26	32	44	56	164	194	10 600	180	130	8	M12	145	3,2	**PHF FX51-110X155**
120	165	26	32	44	56	174	216	13 000	185	135	9	M12	145	3,4	**PHF FX51-120X165**
130	180	34	40	54	64	189	290	18 900	175	125	12	M12	145	5,2	**PHF FX51-130X180**
140	190	34	40	54	68	199	290	20 500	165	120	9	M14	230	5,4	**PHF FX51-140X190**
150	200	34	40	54	68	209	333	25 000	175	130	10	M14	230	5,7	**PHF FX51-150X200**
160	210	34	40	54	68	219	362	29 000	180	135	11	M14	230	6	**PHF FX51-160X210**
170	225	44	50	64	78	234	400	34 000	140	105	12	M14	230	8,3	**PHF FX51-170X225**
180	235	44	50	64	78	244	400	36 000	135	105	12	M14	230	8,8	**PHF FX51-180X235**
190	250	44	50	64	78	259	500	47 500	160	120	15	M14	230	10	**PHF FX51-190X250**
200	260	44	50	64	78	269	500	50 000	150	115	15	M14	230	10,5	**PHF FX51-200X260**

FX52

d **14 – 50** mm

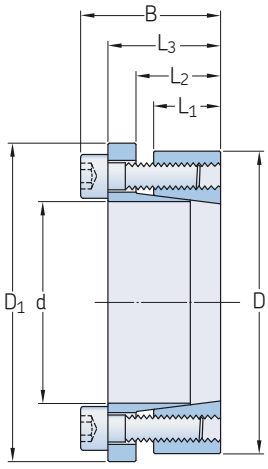

Dimensions							Performance		Pressure		Clamp screws			Weight	Designation
d	D	L_1	L_2	L_3	B	D_1	Transmissible axial force F_t	Transmissible torque M_t	Shaft surface P_w	Hub surface P_n	Qty	Size	Tightening torque M_s		
mm							kN	Nm	N/mm²	N/mm²	–	–	Nm	kg	–
14	55	17	22	30	38	62	18,1	120	205	55	3	M8	25	0,5	**PHF FX52-14X55**
16	55	17	22	30	38	62	18,1	140	180	55	3	M8	25	0,5	**PHF FX52-16X55**
18	55	17	22	30	38	62	18,1	150	160	55	3	M8	25	0,5	**PHF FX52-18X55**
19	55	17	22	30	38	62	18,1	160	150	55	3	M8	25	0,5	**PHF FX52-19X55**
20	55	17	22	30	38	62	18,1	170	145	55	3	M8	25	0,5	**PHF FX52-20X55**
22	55	17	22	30	38	62	25,3	280	185	75	3	M8	35	0,5	**PHF FX52-22X55**
24	55	17	22	30	38	62	25,3	300	170	75	3	M8	35	0,5	**PHF FX52-24X55**
25	55	17	22	30	38	62	25,3	310	165	75	3	M8	35	0,5	**PHF FX52-25X55**
28	55	17	22	30	38	62	31,4	430	175	90	3	M8	41	0,4	**PHF FX52-28X55**
30	55	17	22	30	38	62	31,4	470	165	90	3	M8	41	0,4	**PHF FX52-30X55**
24	65	17	22	30	38	72	37,4	440	245	90	5	M8	30	0,7	**PHF FX52-24X65**
25	65	17	22	30	38	72	37,4	460	235	90	5	M8	30	0,7	**PHF FX52-25X65**
28	65	17	22	30	38	72	43,6	600	245	105	5	M8	35	0,6	**PHF FX52-28X65**
30	65	17	22	30	38	72	43,6	640	230	105	5	M8	35	0,6	**PHF FX52-30X65**
32	65	17	22	30	38	72	43,6	690	215	105	5	M8	35	0,6	**PHF FX52-32X65**
35	65	17	22	30	38	72	52,5	910	235	130	5	M8	41	0,5	**PHF FX52-35X65**
38	65	17	22	30	38	72	52,5	990	220	130	5	M8	41	0,5	**PHF FX52-38X65**
40	65	17	22	30	38	72	52,5	1 050	205	130	5	M8	41	0,5	**PHF FX52-40X65**
30	80	20	25	33	41	87	52,4	780	235	90	7	M8	30	1	**PHF FX52-30X80**
32	80	20	25	33	41	87	52,4	830	220	90	7	M8	30	1	**PHF FX52-32X80**
35	80	20	25	33	41	87	61	1 060	230	100	7	M8	35	1	**PHF FX52-35X80**
38	80	20	25	33	41	87	61	1 150	215	100	7	M8	35	1	**PHF FX52-38X80**
40	80	20	25	33	41	87	61	1 220	205	100	7	M8	35	0,9	**PHF FX52-40X80**
42	80	20	25	33	41	87	73,5	1 540	235	120	7	M8	41	0,9	**PHF FX52-42X80**
45	80	20	25	33	41	87	73,5	1 650	220	120	7	M8	41	0,8	**PHF FX52-45X80**
48	80	20	25	33	41	87	73,5	1 760	205	120	7	M8	41	0,8	**PHF FX52-48X80**
50	80	20	25	33	41	87	73,5	1 830	195	120	7	M8	41	0,8	**PHF FX52-50X80**

FX60
d **25 – 400** mm

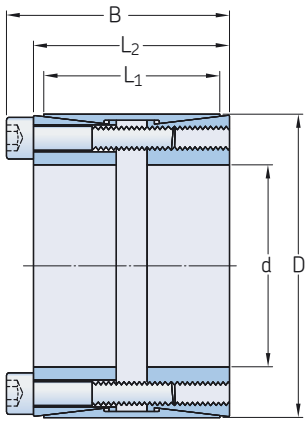

Dimensions					**Performance**		**Pressure**		**Clamp screws**			**Weight**	**Designation**
d	D	L_1	L_2	B	Transmissible axial force F_t	Transmissible torque M_t	Shaft surface P_w	Hub surface P_n	Qty	Size	Tightening torque M_s		
mm					kN	Nm	N/mm²	N/mm²	–	–	Nm	kg	–
25	50	39	45	51	76	950	245	122	8	M6	17	0,5	**PHF FX60-25X50**
28	55	39	45	51	76	1 070	219	111	8	M6	17	0,6	**PHF FX60-28X55**
30	55	39	45	51	76	1 150	204	111	8	M6	17	0,6	**PHF FX60-30X55**
35	60	39	45	51	76	1 340	175	102	8	M6	17	0,7	**PHF FX60-35X60**
38	65	39	45	51	76	1 450	161	94	8	M6	17	0,7	**PHF FX60-38X65**
40	65	39	45	51	76	1 530	153	94	8	M6	17	0,7	**PHF FX60-40X65**
42	75	56	64	72	141	2 970	188	105	8	M8	41	1	**PHF FX60-42X75**
45	75	56	64	72	141	3 150	175	105	8	M8	41	0,9	**PHF FX60-45X75**
48	80	56	64	72	166	4 000	164	98	8	M8	41	1,4	**PHF FX60-48X80**
50	80	56	64	72	166	4 150	158	98	8	M8	41	1,3	**PHF FX60-50X80**
55	85	56	64	72	166	4 550	143	93	8	M8	41	1,5	**PHF FX60-55X85**
60	90	56	64	72	207	6 200	164	109	10	M8	41	1,6	**PHF FX60-60X90**
65	95	56	64	72	207	6 750	152	104	10	M8	41	1,8	**PHF FX60-65X95**
70	110	70	78	88	330	11 550	179	114	10	M10	83	3	**PHF FX60-70X110**
75	115	70	78	88	330	12 350	167	109	10	M10	83	3,3	**PHF FX60-75X115**
80	120	70	78	88	396	15 800	188	125	12	M10	83	3,5	**PHF FX60-80X120**
85	125	70	78	88	396	16 800	177	120	12	M10	83	3,7	**PHF FX60-85X125**
90	130	70	78	88	396	17 800	167	115	12	M10	83	3,8	**PHF FX60-90X130**
95	135	70	78	88	396	18 800	158	111	12	M10	83	5	**PHF FX60-95X135**
100	145	90	100	112	576	28 800	170	117	12	M12	145	6	**PHF FX60-100X145**
110	155	90	100	112	576	31 700	155	110	12	M12	145	6,2	**PHF FX60-110X155**
120	165	90	100	112	573	40 300	165	120	14	M12	145	7,2	**PHF FX60-120X165**
130	180	104	116	130	791	51 400	155	112	12	M14	230	10	**PHF FX60-130X180**
140	190	104	116	130	923	64 600	168	124	14	M14	230	10,2	**PHF FX60-140X190**
150	200	104	116	130	1 055	79 100	179	135	16	M14	230	10,8	**PHF FX60-150X200**
160	210	104	116	130	1 055	84 400	168	128	16	M14	230	11,5	**PHF FX60-160X210**
170	225	134	146	162	1 283	109 000	149	113	14	M16	355	17	**PHF FX60-170X225**
180	235	134	146	162	1 466	132 000	161	124	16	M16	355	18,5	**PHF FX60-180X235**
190	250	134	146	162	1 466	139 000	153	116	16	M16	355	21,5	**PHF FX60-190X250**
200	260	134	146	162	1 466	146 500	145	112	16	M16	355	22	**PHF FX60-200X260**
220	285	134	146	162	1 833	201 500	165	127	20	M16	355	25	**PHF FX60-220X285**
240	305	134	146	162	2 017	242 000	166	131	22	M16	355	27	**PHF FX60-240X305**
260	325	134	146	162	2 017	262 000	154	123	22	M16	355	30	**PHF FX60-260X325**
280	355	165	177	197	2 862	400 000	164	130	20	M20	690	46	**PHF FX60-280X355**
300	375	165	177	197	3 148	472 000	169	135	22	M20	690	50	**PHF FX60-300X375**
320	405	165	177	197	3 148	503 500	158	125	22	M20	690	60	**PHF FX60-320X405**
340	425	165	177	197	3 434	583 500	162	130	24	M20	690	65	**PHF FX60-340X425**
360	455	190	202	224	3 918	705 000	152	120	22	M22	930	89	**PHF FX60-360X455**
380	475	190	202	224	4 631	880 000	170	136	26	M22	930	93	**PHF FX60-380X475**
400	495	190	202	224	4 631	926 000	162	131	26	M22	930	98	**PHF FX60-400X495**

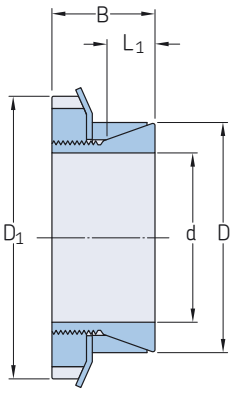

Dimensions					**Performance**		**Pressure**		**Clamp screws**		**Weight**	**Designation**
d	D	L_1	B	D_1	Transmissible axial force F_t	Transmissible torque M_t	Shaft surface P_w	Hub surface P_n	Nut size	Tightening torque M_s		
mm					kN	Nm	N/mm²	N/mm²	–	Nm	kg	–
14	25	6,5	16,5	32	5,1	38	200	110	KM4	95	0,05	**PHF FX80-14X25**
15	25	6,5	16,5	32	5,5	41	185	110	KM4	95	0,05	**PHF FX80-15X25**
16	25	6,5	16,5	32	5,45	43	174	110	KM4	95	0,04	**PHF FX80-16X25**
17	26	6,5	16,5	32	5,5	47	164	107	KM4	95	0,04	**PHF FX80-17X26**
18	26	6,5	16,5	32	5,4	49	155	107	KM4	95	0,04	**PHF FX80-18X26**
19	30	6,5	18	38	6,6	62	176	112	KM5	160	0,08	**PHF FX80-19X30**
20	30	6,5	18	38	6,6	66	167	111	KM5	160	0,07	**PHF FX80-20X30**
22	32	6,5	18	38	6,6	73	152	105	KM5	160	0,1	**PHF FX80-22X32**
24	35	6,5	18	45	8,75	105	185	127	KM6	220	0,09	**PHF FX80-24X35**
25	35	6,5	18	45	8,8	110	178	127	KM6	220	0,09	**PHF FX80-25X35**
28	36	6,5	18	45	8,55	120	159	124	KM6	220	0,07	**PHF FX80-28X36**
30	40	7	19,5	52	10,6	160	164	123	KM7	340	0,07	**PHF FX80-30X40**
32	42	7	19,5	52	10,6	170	154	117	KM7	340	0,17	**PHF FX80-32X42**
35	45	8	21,5	58	13,1	230	153	120	KM8	480	0,17	**PHF FX80-35X45**
36	45	8	21,5	58	13,3	240	149	120	KM8	480	0,15	**PHF FX80-36X45**
38	48	8	21,5	58	13,1	250	141	112	KM8	480	0,15	**PHF FX80-38X48**
40	52	10	24,5	65	15,5	310	120	93	KM9	680	0,24	**PHF FX80-40X52**
42	55	10	25,5	65	15,2	320	114	87	KM9	680	0,25	**PHF FX80-42X55**
45	57	10	25,5	70	17,7	400	122	96	KM10	870	0,28	**PHF FX80-45X57**
48	62	10	25,5	75	20,8	500	135	105	KM11	970	0,32	**PHF FX80-48X62**
50	62	10	25,5	75	20,8	520	130	105	KM11	970	0,3	**PHF FX80-50X62**
55	68	12	27,5	80	22	610	103	84	KM12	1 100	0,36	**PHF FX80-55X68**
56	68	12	27,5	80	22	620	101	82	KM12	1 100	0,34	**PHF FX80-56X68**
60	73	12	28,5	85	26,6	800	113	93	KM13	1 300	0,4	**PHF FX80-60X73**
63	79	14	30,5	92	31,1	980	107	86	KM14	1 600	0,56	**PHF FX80-63X79**
65	79	14	30,5	92	31,1	1 010	104	86	KM14	1 600	0,52	**PHF FX80-65X79**
70	84	14	31,5	98	35,4	1 240	110	92	KM15	2 000	0,6	**PHF FX80-70X84**

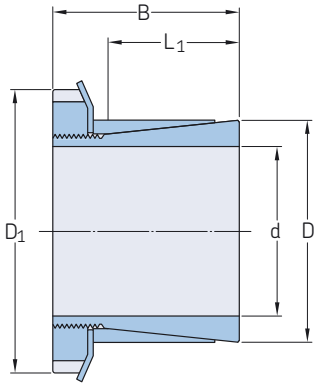

Dimensions					**Performance**		**Pressure**		**Clamp screws**		**Weight**	**Designation**
d	D	L	B	D_1	Transmissible axial force F_t	Transmissible torque M_t	Shaft surface P_w	Hub surface P_n	Nut size	Tightening torque M_s		
mm					kN	Nm	N/mm²	N/mm²	–	Nm	kg	–
14	25	20	30	32	9	64	85	45	KM4	95	0,08	**PHF FX90-14X25**
15	25	20	30	32	9	70	80	45	KM4	95	0,08	**PHF FX90-15X25**
16	25	20	30	32	9	73	75	45	KM4	95	0,07	**PHF FX90-16X25**
17	25	20	32	32	9	80	70	45	KM4	160	0,07	**PHF FX90-17X25**
18	30	20	32	38	9	83	65	40	KM4	160	0,12	**PHF FX90-18X30**
19	30	20	32	38	11	105	75	45	KM5	160	0,12	**PHF FX90-19X30**
20	30	20	32	38	11	112	70	45	KM5	160	0,11	**PHF FX90-20X30**
22	35	25	36	45	14	163	70	45	KM6	220	0,18	**PHF FX90-22X35**
24	35	25	36	45	14	178	65	45	KM6	220	0,16	**PHF FX90-24X35**
25	35	25	36	45	14	185	60	45	KM6	220	0,15	**PHF FX90-25X35**
28	40	30	42	52	17	250	55	40	KM7	340	0,24	**PHF FX90-28X40**
30	40	30	42	52	17	270	50	40	KM7	340	0,21	**PHF FX90-30X40**
32	45	30	44	58	21	350	60	45	KM8	480	0,32	**PHF FX90-32X45**
35	45	30	44	58	21	390	55	45	KM8	480	0,26	**PHF FX90-35X45**
38	50	30	45	65	26	500	60	45	KM9	680	0,35	**PHF FX90-38X50**
40	50	30	45	65	26	520	55	45	KM9	680	0,33	**PHF FX90-40X50**
42	55	30	46	70	30	680	60	50	KM10	870	0,43	**PHF FX90-42X55**
45	55	30	46	70	30	680	60	50	KM10	870	0,39	**PHF FX90-45X55**
48	60	30	46	75	35	840	60	50	KM11	970	0,45	**PHF FX90-48X60**
50	60	30	46	75	35	880	60	50	KM11	970	0,4	**PHF FX90-50X60**
55	65	30	46	80	37	1 030	60	50	KM12	1 100	0,44	**PHF FX90-55X65**
60	70	30	52	85	45	1 360	65	55	KM13	1 300	0,55	**PHF FX90-60X70**

FX120
d **18 – 80** mm

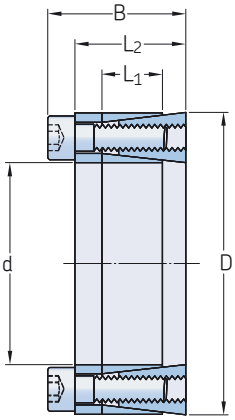

Dimensions					Performance	Pressure		Clamp screws			Weight	Designation
					Transmissible torque	Shaft surface	Hub surface			Tightening torque		
d	D	L_1	L_2	B	M_t	P_w	P_n	Qty	Size	M_s		
mm					Nm	N/mm²	N/mm²	–	–	Nm	kg	–
18	40	12	18,5	24,5	190	260	120	6	M6	16	0,12	**PHF FX120-18X40**
19	41	12	18,5	24,5	210	260	120	6	M6	16	0,13	**PHF FX120-19X41**
20	42	12	18,5	24,5	240	250	120	6	M6	16	0,13	**PHF FX120-20X42**
24	46	12	18,5	24,5	290	250	120	6	M6	16	0,15	**PHF FX120-24X46**
25	47	12	18,5	24,5	330	230	120	8	M6	16	0,16	**PHF FX120-25X47**
28	50	12	18,5	24,5	370	220	120	8	M6	16	0,17	**PHF FX120-28X50**
30	52	12	18,5	24,5	430	210	120	8	M6	16	0,18	**PHF FX120-30X52**
35	57	15	22,0	28,0	610	170	100	12	M6	16	0,24	**PHF FX120-35X57**
38	60	15	22,0	28,0	680	170	100	12	M6	16	0,26	**PHF FX120-38X60**
40	62	15	22,0	28,0	780	170	100	12	M6	16	0,27	**PHF FX120-40X62**
42	70	18	28,0	36,0	1 480	190	110	12	M8	41	0,50	**PHF FX120-42X70**
45	73	18	28,0	36,0	1 500	210	130	12	M8	41	0,51	**PHF FX120-45X73**
48	76	18	28,0	36,0	1 550	210	130	12	M8	41	0,55	**PHF FX120-48X76**
50	78	18	28,0	36,0	1 650	190	120	12	M8	41	0,57	**PHF FX120-50X78**
55	83	18	28,0	36,0	2 000	190	120	16	M8	41	0,64	**PHF FX120-55X83**
60	88	18	28,0	36,0	2 350	190	120	16	M8	41	0,67	**PHF FX120-60X88**
70	105	22	35,0	45,0	3 900	180	120	12	M10	70	1,19	**PHF FX120-70X105**
80	115	22	35,0	45,0	4 800	170	120	16	M10	70	1,32	**PHF FX120-80X115**

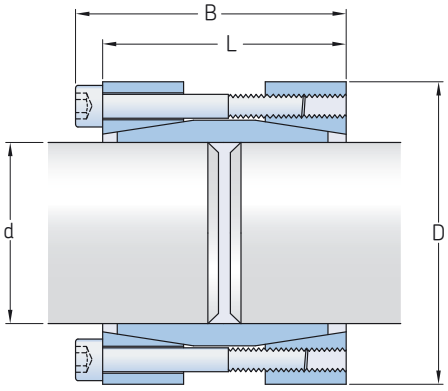

Standard

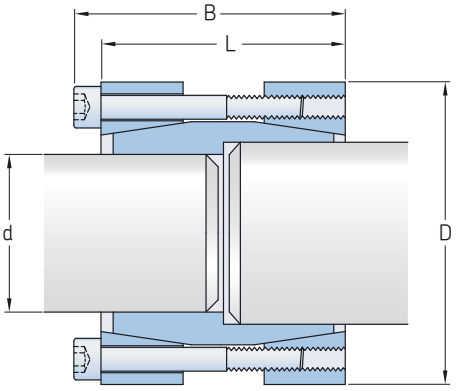

Double diameter*

Dimensions				**Performance**		**Clamp screws**			**Weight**	**Designation**
				Transmissible axial force	Transmissible torque			Tightening torque		
d	D	L	B	F_t	M_t	Qty	Size	M_s		
mm				kN	Nm	–	–	Nm	kg	–
17	50	50	56	24,5	210	4	M6	17	0,5	**PHF FX130-17X50**
18	50	50	56	24,5	230	4	M6	17	0,5	**PHF FX130-18X50**
19	50	50	56	24,5	240	4	M6	17	0,5	**PHF FX130-19X50**
20	50	50	56	24,5	250	4	M6	17	0,5	**PHF FX130-20X50**
22	55	60	66	24,5	270	4	M6	17	0,6	**PHF FX130-22X55**
24	55	60	66	24,5	300	4	M6	17	0,6	**PHF FX130-24X55**
25	55	60	66	36,5	460	6	M6	17	0,6	**PHF FX130-25X55**
28	60	60	66	36,5	520	6	M6	17	0,7	**PHF FX130-28X60**
30	60	60	66	36,5	560	6	M6	17	0,7	**PHF FX130-30X60**
32	63	60	66	36,5	590	6	M6	17	0,7	**PHF FX130-32X63**
35	75	75	83	45,5	770	4	M8	41	1,3	**PHF FX130-35X75**
38	75	75	83	45,5	860	4	M8	41	1,3	**PHF FX130-38X75**
40	75	75	83	45,5	910	4	M8	41	1,3	**PHF FX130-40X75**
42	78	75	83	45,5	940	4	M8	41	2	**PHF FX130-42X78**
45	85	85	93	67,5	1 530	6	M8	41	2,2	**PHF FX130-45X85**
48	90	85	93	67,5	1 610	6	M8	41	2,4	**PHF FX130-48X90**
50	90	85	93	67,5	1 700	6	M8	41	2,3	**PHF FX130-50X90**
55	94	85	93	90,5	2 460	8	M8	41	2,9	**PHF FX130-55X94**
60	100	85	93	90,5	2 720	8	M8	41	3,2	**PHF FX130-60X100**
65	105	85	93	90,5	2 940	8	M8	41	3	**PHF FX130-65X105**
70	115	100	110	107,5	3 780	6	M10	83	4,3	**PHF FX130-70X115**
75	125	100	110	107,5	4 040	6	M10	83	5	**PHF FX130-75X125**
80	125	100	110	107,5	4 300	6	M10	83	4,7	**PHF FX130-80X125**

***** Double diameter versions are available upon request: contact SKF for details.

FX140

d **18 – 90** mm

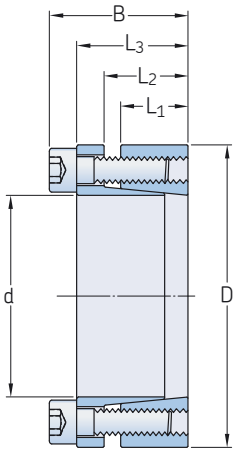

Dimensions						Performance		Pressure		Clamp screws			Weight	Designation
d	D	L_1	L_2	L_3	B	Transmissible axial force F_t	Transmissible torque M_t	Shaft surface P_w	Hub surface P_n	Qty	Size	Tightening torque M_s		
mm						kN	Nm	N/mm²	N/mm²	–	–	Nm	kg	–
18	40	12	15	20	24	23,7	210	235	130	6	M4	5	0,2	**PHF FX140-18X40**
19	41	12	15	20	24	23,7	220	220	128	6	M4	5	0,2	**PHF FX140-19X41**
20	42	12	15	20	24	27,7	270	245	145	7	M4	5	0,2	**PHF FX140-20X42**
22	44	12	15	20	24	27,7	300	225	140	7	M4	5	0,2	**PHF FX140-22X44**
24	46	12	15	20	24	27,7	330	205	135	7	M4	5	0,2	**PHF FX140-24X46**
25	47	12	15	20	24	27,7	340	195	130	7	M4	5	0,2	**PHF FX140-25X47**
28	50	12	15	20	24	35,6	500	225	155	9	M4	5	0,2	**PHF FX140-28X50**
30	52	12	15	20	24	35,6	530	210	151	9	M4	5	0,2	**PHF FX140-30X52**
32	54	12	15	20	24	35,6	570	197	146	9	M4	5	0,2	**PHF FX140-32X54**
35	57	16	19	24	28	39,5	690	158	115	10	M4	5	0,3	**PHF FX140-35X57**
36	58	16	19	24	28	39,5	710	155	113	10	M4	5	0,3	**PHF FX140-36X58**
38	60	16	19	24	28	43,5	830	160	120	11	M4	5	0,3	**PHF FX140-38X60**
40	62	16	19	24	28	43,5	870	150	116	11	M4	5	0,4	**PHF FX140-40X62**
42	70	19	23	30	36	73	1 530	200	146	8	M6	17	0,6	**PHF FX140-42X70**
45	73	19	23	30	36	73	1 640	185	140	8	M6	17	0,6	**PHF FX140-45X73**
48	76	19	23	30	36	73	1 750	175	134	8	M6	17	0,6	**PHF FX140-48X76**
50	78	19	23	30	36	73	1 820	165	131	8	M6	17	0,6	**PHF FX140-50X78**
55	83	19	23	30	36	73	2 000	150	123	8	M6	17	0,7	**PHF FX140-55X83**
56	84	19	23	30	36	73	2 040	150	120	8	M6	17	0,7	**PHF FX140-56X84**
60	88	19	23	30	36	82,1	2 460	158	130	9	M6	17	0,7	**PHF FX140-60X88**
63	91	19	23	30	36	82,1	2 580	150	125	9	M6	17	0,9	**PHF FX140-63X91**
65	93	19	23	30	36	82,1	2 660	140	120	9	M6	17	1	**PHF FX140-65X93**
70	105	23	28	37	45	134,8	4 720	180	148	8	M8	41	1,5	**PHF FX140-70X105**
75	110	23	28	37	45	134,8	5 050	170	140	8	M8	41	1,5	**PHF FX140-75X110**
80	115	23	28	37	45	134,8	5 390	160	135	8	M8	41	1,7	**PHF FX140-80X115**
85	120	23	28	37	45	134,8	5 730	150	130	8	M8	41	2	**PHF FX140-85X120**
90	125	23	28	37	45	168,5	7 580	156	156	10	M8	41	2,3	**PHF FX140-90X125**

FX190
d **14 – 170** mm

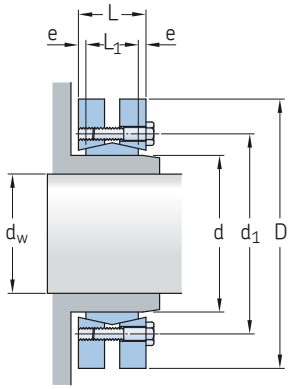

Dimensions							Performance		Clamp screws			Weight	Designation
d	d_w	D	L_1	L	d_1	e	Transmissible axial force F_t	Transmissible torque M_t	Qty	Size	Tightening torque M_s		
mm							kN	Nm	–	–	Nm	kg	–
14	11 12	38	7	11,0	23	2	6 9	30 50	4	M5	4	0,1	**PHF FX190-14X38**
16	13 14	41	11	15,0	26	2	10 13	70 90	5	M5	4	0,1	**PHF FX190-16X41**
24	19 20 21	50	14	19,5	36	2,75	25 27 29	170 210 250	6	M5	4	0,2	**PHF FX190-24X50**
30	24 25 26	60	16	21,5	44	2,75	29 31 33	300 340 380	7	M5	4	0,3	**PHF FX190-30X60**
36	28 30 31	72	18	23,5	52	2,75	50 58 58	440 570 630	5	M6	12	0,4	**PHF FX190-36X72**
44	32 35 36	80	20	25,5	61	2,75	64 74 77	620 780 860	7	M6	12	0,6	**PHF FX190-44X80**
50	38 40 42	90	22	27,5	70	2,75	79 86 92	940 1 160 1 380	8	M6	12	0,8	**PHF FX190-50X90**
55	42 45 48	100	23	30,5	75	3,75	79 88 97	1 160 1 520 1 880	8	M6	12	1,1	**PHF FX190-55X100**
62	48 50 52	110	23	30,5	86	3,75	100 111 117	1 850 2 200 2 400	10	M6	12	1,3	**PHF FX190-62X110**
68	50 55 60	115	23	30,5	86	3,75	97 106 120	2 000 2 500 3 150	10	M6	12	1,4	**PHF FX190-68X115**
75	55 60 65	138	25	32,5	100	3,75	119 137 155	2 500 3 200 3 950	7	M8	30	1,7	**PHF FX190-75X138**
80	60 65 70	145	25	32,5	100	3,75	124 140 158	3 200 3 900 4 600	7	M8	30	1,9	**PHF FX190-80X145**
85	65 70 75	155	30	39,0	114	4,5	175 195 216	4 800 6 100 7 400	10	M8	30	3,5	**PHF FX190-85X155**

Dimensions							Performance		Clamp screws			Weight	Designation
d	d_w	D	L_1	L	d_1	e	Transmissible axial force F_t	Transmissible torque M_t	Qty	Size	Tightening torque M_s		
mm							kN	Nm	–	–	Nm	kg	–
90	65 70 75	155	30	39,0	114	4,5	170 190 210	4 750 6 000 7 250	10	M8	30	3,3	**PHF FX190-90X155**
100	70 75 80	170	34	44,0	124	5	195 220 240	6 900 7 500 9 000	12	M8	30	4,7	**PHF FX190-100X170**
110	75 80 85	185	39	50,0	136	5,5	229 252 262	7 200 9 000 10 800	9	M10	59	5,9	**PHF FX190-110X185**
115	80 85 90	188	39	50,0	141	5,5	235 259 269	7 400 9 200 11 100	9	M10	59	5,5	**PHF FX190-115X188**
120	80 85 90	215	42	54,0	160	6	285 314 340	10 600 13 300 14 500	12	M10	59	9	**PHF FX190-120X215**
125	85 90 95	215	42	54,0	160	6	296 324 352	11 000 13 000 15 000	12	M10	59	8,3	**PHF FX190-125X215**
130	90 95 100	215	42	54,0	160	6	304 333 362	11 300 13 300 15 400	12	M10	59	8	**PHF FX190-130X215**
140	95 100 105	230	46	60,5	175	7,25	367 396 425	15 100 17 600 20 100	10	M12	100	10	**PHF FX190-140X230**
155	105 110 115	265	50	64,5	192	7,25	447 478 509	22 000 25 000 28 000	12	M12	100	15	**PHF FX190-155X265**
160	110 115 120	265	50	64,5	192	7,25	460 490 520	22 600 25 700 28 800	12	M12	100	14,5	**PHF FX190-160X265**
165	115 120 125	290	56	71,0	210	7,5	595 630 655	31 000 35 000 39 000	8	M16	250	22	**PHF FX190-165X290**
170	120 125 130	290	56	71,0	210	7,5	610 640 670	31 900 36 000 40 100	8	M16	250	21	**PHF FX190-170X290**

FX190
d **175 – 480** mm

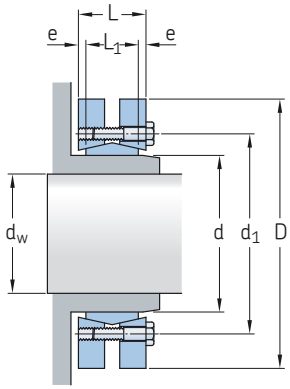

Dimensions							Performance		Clamp screws			Weight	Designation
d	d_w	D	L_1	L	d_1	e	Transmissible axial force F_t	Transmissible torque M_t	Qty	Size	Tightening torque M_s		
mm							kN	Nm	–	–	Nm	kg	–
175	125	300	56	71,0	220	7,5	605	36 000	8	M16	250	22	**PHF FX190-175X300**
	130						369	41 000					
	135						675	45 000					
180	130	330	71	86,0	236	7,5	778	52 000	8	M16	250	21	**PHF FX190-180X330**
	135						819	57 000					
	140						861	62 000					
185	135	330	71	86,0	236	7,5	778	52 000	10	M24	250	37	**PHF FX190-185X330**
	140						819	57 000					
	145						861	62 000					
190	140	330	71	86,0	236	7,5	800	63 500	10	M16	250	36	**PHF FX190-190X330**
	145						840	58 700					
	150						885	63 800					
195	140	350	71	86,0	246	7,5	933	65 000	12	M16	250	41	**PHF FX190-195X350**
	150						1 025	76 000					
	155						1 071	81 500					
200	150	350	71	86,0	246	7,5	990	74 000	12	M16	250	41	**PHF FX190-200X350**
	155						1 035	80 000					
	160						1 080	86 000					
220	160	370	88	104,0	270	8	1 190	95 000	15	M16	250	54	**PHF FX190-220X370**
	165						1 239	102 000					
	170						1 290	110 000					
240	170	405	92	109	295	8,5	1 464	120 000	12	M20	490	67	**PHF FX190-240X405**
	180						1 576	138 000					
	190						1 675	156 000					
260	190	430	103	120	321	8,5	1 760	164 000	14	M20	490	82	**PHF FX190-260X430**
	200						1 880	184 000					
	210						2 010	205 000					
280	210	460	114	134	346	10	2 090	217 000	16	M20	490	102	**PHF FX190-280X460**
	220						2 220	244 000					
	230						2 350	270 000					
300	230	485	122	142	364	10	2 431	275 000	18	M20	490	118	**PHF FX190-300X485**
	240						2 567	295 000					
	245						2 636	315 000					
320	240	520	122	142	386	10	2 647	312 000	20	M20	490	131	**PHF FX190-320X520**
	250						2 786	340 000					
	260						2 900	374 000					

Dimensions							Performance		Clamp screws			Weight	Designation
d	d_w	D	L_1	L	d_1	e	Transmissible axial force F_t	Transmissible torque M_t	Qty	Size	Tightening torque M_s		
mm							kN	Nm	–	–	Nm	kg	–
340	250 260 270	570	134	156	408	11	3 119 3 249 3 400	390 000 422 500 460 000	24	M20	490	186	**PHF FX190-340X570**
350	270 280 285	580	140	162	432	11	3 276 3 430 3 500	442 000 480 000 500 000	24	M20	490	195	**PHF FX190-350X580**
360	280 290 295	590	140	162	432	11	3 310 3 461 3 536	463 000 502 000 522 000	24	M20	490	204	**PHF FX190-360X590**
380	290 300 310	645	144	168	458	12	3 910 4 080 4 248	567 000 610 000 658 000	20	M24	840	239	**PHF FX190-380X645**
390	300 310 320	660	144	168	468	12	4 160 4 330 4 484	624 000 671 000 718 000	21	M24	840	260	**PHF FX190-390X660**
400	315 320 330	680	144	168	480	12	4 260 4 345 4 500	670 000 695 000 744 000	21	M24	840	280	**PHF FX190-400X680**
420	330 340 350	690	164	188	504	12	4 850 5 040 5 220	780 000 840 000 900 000	24	M24	840	316	**PHF FX190-420X690**
440	340 350 360	750	177	202	527	12,5	4 740 4 910 5 090	806 000 860 000 917 000	24	M24	840	408	**PHF FX190-440X750**
460	360 370 380	770	177	202	547	12,5	5 670 5 860 6 050	1 000 000 1 070 000 1 140 000	28	M24	840	420	**PHF FX190-460X770**
480	380 390 400	800	188	213	570	12,5	6 150 6 350 6 550	1 170 000 1 240 000 1 310 000	30	M24	840	505	**PHF FX190-480X800**

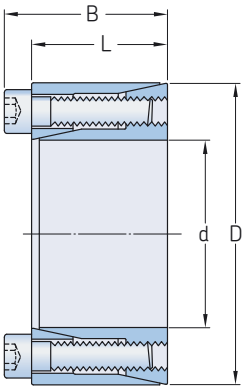

Dimensions				**Performance**		**Pressure**		**Clamp screws**			**Weight**	**Designation**
d	D	L	B	Transmissible axial force F_t	Transmissible torque M_t	Shaft surface P_w	Hub surface P_n	Qty	Size	Tightening torque M_s		
mm				kN	Nm	N/mm²	N/mm²	–	–	Nm	kg	–
10	20	13	15,5	3	15	110	55	4	M2.5	1,2	0,019	**PHF FX350-10X20**
12	22	13	15,5	3	20	90	50	4	M2.5	1,2	0,022	**PHF FX350-12X22**
14	26	17	20	5	35	105	55	4	M3	2,1	0,039	**PHF FX350-14X26**
15	28	17	20	6	40	100	50	4	M3	2,1	0,044	**PHF FX350-15X28**
16	32	17	21	9	70	130	65	4	M4	4,9	0,067	**PHF FX350-16X32**
18	35	21	25	9	80	115	60	4	M4	4,9	0,087	**PHF FX350-18X35**
19	35	21	25	9	85	110	60	4	M4	4,9	0,083	**PHF FX350-19X35**
20	38	21	26	16	220	220	115	6	M5	10	0,1	**PHF FX350-20X38**
22	40	21	26	16	240	200	110	6	M5	10	0,11	**PHF FX350-22X40**
24	47	26	32	23	380	220	110	6	M6	17	0,19	**PHF FX350-24X47**
25	47	26	32	23	390	210	110	6	M6	17	0,19	**PHF FX350-25X47**

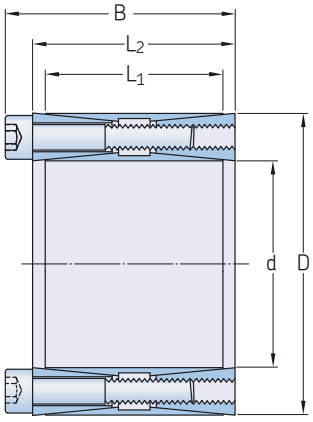

Dimensions					Performance		Pressure		Clamp screws			Weight	Designation
d	D	L_1	L_2	B	Transmissible axial force F_t	Transmissible torque M_t	Shaft surface P_w	Hub surface P_n	Qty	Size	Tightening torque M_s		
mm					kN	Nm	N/mm²	N/mm²	–	–	Nm	kg	–
45	75	56	64	72	155	3 460	165	100	8	M8	41	1,3	**PHF FX400-45X75**
48	80	56	64	72	155	3 680	150	95	8	M8	41	1,5	**PHF FX400-48X80**
50	80	56	64	72	155	3 820	147	95	8	M8	41	1,4	**PHF FX400-50X80**
55	85	56	64	72	155	4 260	135	85	8	M8	41	1,5	**PHF FX400-55X85**
60	90	56	64	72	190	5 820	155	100	10	M8	41	1,5	**PHF FX400-60X90**
65	95	56	64	72	190	6 270	140	95	10	M8	41	1,6	**PHF FX400-65X95**
70	110	70	78	88	305	10 730	170	105	10	M10	83	3	**PHF FX400-70X110**
75	115	70	78	88	305	11 540	155	100	10	M10	83	3,1	**PHF FX400-75X115**
80	120	70	78	88	369	14 700	175	115	12	M10	83	3,5	**PHF FX400-80X120**
85	125	70	78	88	369	15 700	165	110	12	M10	83	3,5	**PHF FX400-85X125**
90	130	70	78	88	370	16 610	157	106	12	M10	83	3,8	**PHF FX400-90X130**
95	135	70	78	88	370	17 530	150	102	12	M10	83	4	**PHF FX400-95X135**
100	145	90	100	112	538	26 900	160	110	12	M12	145	6	**PHF FX400-100X145**
110	155	90	100	112	538	29 530	143	102	12	M12	145	6,2	**PHF FX400-110X155**
120	165	90	100	112	628	37 610	154	112	14	M12	145	6,8	**PHF FX400-120X165**
130	180	104	116	130	738	48 000	143	106	12	M14	230	9,8	**PHF FX400-130X180**
140	190	104	116	130	861	60 290	160	117	14	M14	230	10,2	**PHF FX400-140X190**
150	200	104	116	130	985	73 800	165	125	16	M14	230	10,9	**PHF FX400-150X200**
160	210	104	116	130	983	78 770	155	118	16	M14	230	11,5	**PHF FX400-160X210**
170	225	134	146	162	1 197	101 730	140	108	14	M16	355	17,2	**PHF FX400-170X225**
180	235	134	146	162	1 369	123 200	150	115	16	M16	355	18	**PHF FX400-180X235**
190	250	134	146	162	1 368	129 880	141	110	16	M16	355	21,5	**PHF FX400-190X250**
200	260	134	146	162	1 368	136 840	137	104	16	M16	355	22	**PHF FX400-200X260**
220	285	134	146	162	1 710	188 000	155	120	20	M16	355	25	**PHF FX400-220X285**
240	305	134	146	162	1 880	225 000	155	120	22	M16	355	27	**PHF FX400-240X305**
260	325	134	146	162	1 880	244 000	155	115	22	M16	355	30	**PHF FX400-260X325**
280	355	165	177	197	2 670	373 000	145	120	20	M20	690	46	**PHF FX400-280X355**
300	375	165	177	197	2 930	440 000	155	125	22	M20	690	50	**PHF FX400-300X375**
320	405	165	177	197	2 930	470 000	145	115	22	M20	690	60	**PHF FX400-320X405**
340	425	165	177	197	3 200	544 000	150	120	24	M20	690	65	**PHF FX400-340X425**
360	455	190	202	224	3 650	658 000	140	110	22	M22	930	89	**PHF FX400-360X455**
380	475	190	202	224	4 320	821 000	160	130	26	M22	930	93	**PHF FX400-380X475**
400	495	190	202	224	4 320	864 000	150	120	26	M22	930	98	**PHF FX400-400X495**

SKF – the knowledge engineering company

From the company that invented the self-aligning ball bearing more than 100 years ago, SKF has evolved into a knowledge engineering company that is able to draw on five technology platforms to create unique solutions for its customers. These platforms include bearings, bearing units and seals, of course, but extend to other areas including: lubricants and lubrication systems, critical for long bearing life in many applications; mechatronics that combine mechanical and electronics knowledge into systems for more effective linear motion and sensorized solutions; and a full range of services, from design and logistics support to condition monitoring and reliability systems.

Though the scope has broadened, SKF continues to maintain the world's leadership in the design, manufacture and marketing of rolling bearings, as well as complementary products such as radial seals. SKF also holds an increasingly important position in the market for linear motion products, high-precision aerospace bearings, machine tool spindles and plant maintenance services.

The SKF Group is globally certified to ISO 14001, the international standard for environmental management, as well as OHSAS 18001, the health and safety management standard. Individual divisions have been approved for quality certification in accordance with ISO 9001 and other customer specific requirements.

With over 100 manufacturing sites worldwide and sales companies in 70 countries, SKF is a truly international corporation. In addition, our distributors and dealers in some 15 000 locations around the world, an e-business marketplace and a global distribution system put SKF close to customers for the supply of both products and services. In essence, SKF solutions are available wherever and whenever customers need them. Overall, the SKF brand and the corporation are stronger than ever. As the knowledge engineering company, we stand ready to serve you with world-class product competencies, intellectual resources, and the vision to help you succeed.



© Airbus – photo: e*m company, H. Goussé

Evolving by-wire technology
SKF has a unique expertise in the fast-growing by-wire technology, from fly-by-wire, to drive-by-wire, to work-by-wire. SKF pioneered practical fly-by-wire technology and is a close working partner with all aerospace industry leaders. As an example, virtually all aircraft of the Airbus design use SKF by-wire systems for cockpit flight control.

SKF is also a leader in automotive by-wire technology, and has partnered with automotive engineers to develop two concept cars, which employ SKF mechatronics for steering and braking. Further by-wire development has led SKF to produce an all-electric forklift truck, which uses mechatronics rather than hydraulics for all controls.

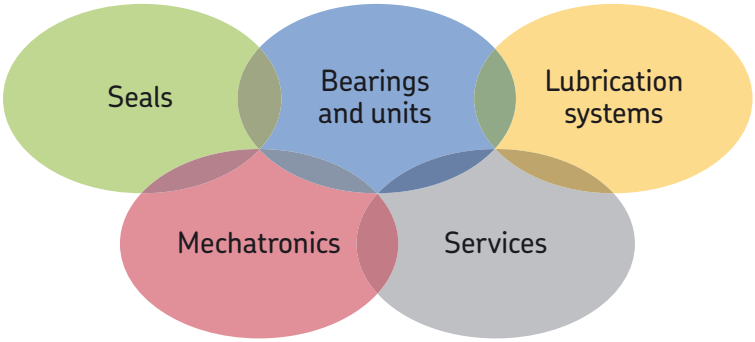





Harnessing wind power
The growing industry of wind-generated electric power provides a source of clean, green electricity. SKF is working closely with global industry leaders to develop efficient and trouble-free turbines, providing a wide range of large, highly specialized bearings and condition monitoring systems to extend equipment life of wind farms located in even the most remote and inhospitable environments.



Working in extreme environments
In frigid winters, especially in northern countries, extreme sub-zero temperatures can cause bearings in railway axleboxes to seize due to lubrication starvation. SKF created a new family of synthetic lubricants formulated to retain their lubrication viscosity even at these extreme temperatures. SKF knowledge enables manufacturers and end user customers to overcome the performance issues resulting from extreme temperatures, whether hot or cold. For example, SKF products are at work in diverse environments such as baking ovens and instant freezing in food processing plants.



Developing a cleaner cleaner
The electric motor and its bearings are the heart of many household appliances. SKF works closely with appliance manufacturers to improve their products' performance, cut costs, reduce weight, and reduce energy consumption. A recent example of this cooperation is a new generation of vacuum cleaners with substantially more suction. SKF knowledge in the area of small bearing technology is also applied to manufacturers of power tools and office equipment.



Maintaining a 350 km/h R&D lab
In addition to SKF's renowned research and development facilities in Europe and the United States, Formula One car racing provides a unique environment for SKF to push the limits of bearing technology. For over 60 years, SKF products, engineering and knowledge have helped make Scuderia Ferrari a formidable force in F1 racing. (The average racing Ferrari utilizes around 150 SKF components.) Lessons learned here are applied to the products we provide to automakers and the aftermarket worldwide.



Delivering Asset Efficiency Optimization
Through SKF Reliability Systems, SKF provides a comprehensive range of asset efficiency products and services, from condition monitoring hardware and software to maintenance strategies, engineering assistance and machine reliability programmes. To optimize efficiency and boost productivity, some industrial facilities opt for an Integrated Maintenance Solution, in which SKF delivers all services under one fixed-fee, performance-based contract.



Planning for sustainable growth
By their very nature, bearings make a positive contribution to the natural environment, enabling machinery to operate more efficiently, consume less power, and require less lubrication. By raising the performance bar for our own products, SKF is enabling a new generation of high-efficiency products and equipment. With an eye to the future and the world we will leave to our children, the SKF Group policy on environment, health and safety, as well as the manufacturing techniques, are planned and implemented to help protect and preserve the earth's limited natural resources. We remain committed to sustainable, environmentally responsible growth.



® SKF is a registered trademark of the SKF Group.

© SKF Group 2010
The contents of this publication are the copyright of the publisher and may not be reproduced (even extracts) unless prior written permission is granted. Every care has been taken to ensure the accuracy of the information contained in this publication but no liability can be accepted for any loss or damage whether direct, indirect or consequential arising out of the use of the information contained herein.

PUB PT/P1 10114 EN · Edition 2 · September 2010

Printed in Germany on environmentally friendly paper.

skf.com